Santa Clara Valley Water District
Board of Directors Meeting

District Headquarters Board Room
5700 Almaden Expressway
San Jose, CA 95118

*AMENDED/APPENDED AGENDA

Tuesday, August 8, 2017
12:00 PM

***ITEMS AMENDED AND/OR APPENDED SINCE THE ORIGINAL PUBLICATION OF THIS AGENDA ARE IDENTIFIED BY AN ASTERISK (*) HEREIN**

District Mission: Provide Silicon Valley safe, clean water for a healthy life, enviornment and economy.

DISTRICT BOARD OF DIRECTORS

John L. Varela, Chair - District 1
Richard Santos, Vice Chair - District 3
Barbara Keegan - District 2
Linda J. LeZotte - District 4
Nai Hsueh - District 5
Tony Estremera - District 6
Gary Kremen - District 7

All public records relating to an open session item on this agenda, which are not exempt from disclosure pursuant to the California Public Records Act, that are distributed to a majority of the legislative body will be available for public inspection at the Office of the Clerk of the Board at the Santa Clara Valley Water District Headquarters Building, 5700 Almaden Expressway, San Jose, CA 95118, at the same time that the public records are distributed or made available to the legislative body. Santa Clara Valley Water District will make reasonable efforts to accommodate persons with disabilities wishing to attend Board of Directors' meeting. Please advise the Clerk of the Board Office of any special needs by calling (408) 265-2600.

NORMA CAMACHO
Interim Chief Executive Officer

MICHELE L. KING, CMC
Clerk of the Board
(408) 265-2600
Fax (408) 266-0271
www.valleywater.org

Note: The finalized Board Agenda, exception items and supplemental items will be posted prior to the meeting in accordance with the Brown Act.

Santa Clara Valley Water District
Board of Directors

*AMENDED/APPENDED AGENDA

***ITEMS AMENDED AND/OR APPENDED SINCE THE ORIGINAL PUBLICATION OF THIS AGENDA ARE IDENTIFIED BY AN ASTERISK (*) HEREIN**

Tuesday, August 8, 2017 | **12:00 PM** | **District Headquarters Board Room**

1. CALL TO ORDER:

1.1. Roll Call.

2. TIME CERTAIN:

12:00 PM

Notice to the Public: The Board of Directors meets in Closed Session in accordance with the Ralph M. Brown Act. Following the conclusion of Closed Session discussion, the Board will return for the remaining items on the regular meeting agenda.

*2.1. Item Removed from Agenda — 17-0504

*2.2. CLOSED SESSION — 17-0526
CONFERENCE WITH LEGAL COUNSEL
Initiation of Litigation
Pursuant to Government Code Section 54956.9(d)(4)
One Potential Case

1:00 PM

2.3. District Counsel Report. (Previously Listed as 2.2.)

2.4. Pledge of Allegiance/National Anthem. (Previously Listed as 2.3.)

2.5. Orders of the Day. (Previously Listed as 2.4.)
A. Approximate Discussion Time (Board); and
B. Adjustments to the Order of Agenda Items.

2.6. Time Open for Public Comment on any Item not on the Agenda. (Previously Listed as 2.5.)

Notice to the public: This item is reserved for persons desiring to address the Board on any matter not on this agenda. Members of the public who wish to address the Board on any item not listed on the agenda should complete a Speaker Card and present it to the Clerk of the Board. The Board Chair will call individuals to the podium in turn. Speakers comments should be limited to three minutes or as set by the Chair. The law does not permit Board action on, or extended discussion of, any item not on the agenda except under special circumstances. If Board action is requested, the matter may be placed on a future agenda. All comments that require a response will be referred to staff for a reply in writing. The Board may take action on any item of business appearing on the posted agenda.

2.7. Resolution Expressing Appreciation to Christian C. Elias. 17-0462

Recommendation: Adopt the Resolution EXPRESSING APPRECIATION TO CHRISTIAN C. ELIAS.

Manager: Norma Camacho, 408-630-2084

Attachments: Attachment 1: Resolution

Est. Staff Time: 5 Minutes

2.8. Public Hearing to Consider Adoption of Resolution of Necessity Relating to Acquisition of Real Property Interests Located in the City of Milpitas, of Unknown Ownership, Necessary to Complete the Lower Berryessa Creek Flood Protection Phase 2 Project (Project No. 40174005). 17-0508

Recommendation:

A. Conduct a public hearing to consider adoption of Resolution of Necessity (RON) (Attachment 1) relating to acquisition of real property interests from unknown owner on property described and depicted in the plats and legal description included as Exhibit 1 (Attachment 2) and Exhibit 2 (Attachment 3) of the RON; and

B. Adopt the RON determining and declaring the Public Necessity for the Acquisition of Certain Real Property or Interests in Real Property by Eminent Domain for the Lower Berryessa Creek Flood Protection Project Phase 2 (Code of Civil Procedure Sections 1245.220, et seq.) by a two-thirds vote.

Manager: Ngoc Nguyen, 408-630-2632

Attachments:
Attachment 1: Resolution of Necessity
Attachment 2: Exhibit 1 Plat & Legal Description
Attachment 3: Exhibit 2 Plat & Legal Description
Attachment 4: PowerPoint

Est. Staff Time: 10 Minutes

3. CONSENT CALENDAR: (3.1 - *3.5) (Est. Time: 5 Minutes)

Notice to the public: There is no separate discussion of individual consent calendar items. Recommended actions are voted on in one motion. If an item is approved on the consent vote, the specific action recommended by staff is adopted. Items listed in this section of the agenda are considered to be routine by the Board, or delegated to the Board Appointed Officers (BAOs) yet required by law or contract to be Board approved (EL-7.10). Any item may be removed for separate consideration at the request of a Board member. Whenever a resolution is on the consent calendar, a roll call vote will be taken on the entire calendar. Members of the public wishing to address the Board on any consent items should complete a Speaker Card and present it to the Clerk of the Board.

3.1. Amendment No. 2 to Agreement No. A3896F with Governmental Advocates, Inc., for State Lobbying Services, Resulting in a Total Not-To-Exceed fee of $334,000. 17-0394

Recommendation:

A. Approve Amendment No. 2 to Agreement No. A3896F, with Governmental Advocates, Inc., for state lobbying services to ensure continuity in the District's ability to accomplish its state policy and legislative goals; and

B. Authorize the Interim Chief Executive Officer (ICEO) to sign Amendment No. 2 to extend the term by one year to expire on August 31, 2018, and to increase the not-to-exceed amount to $334,000, for a total increase of $109,200.

Manager: Rachael Gibson, 408-630-2884

Attachments:

Attachment 1: Amendment No. 2

Attachment 2: SCVWD Agreement No. A3896F

Attachment 3: SCVWD Amendment No. 1 to Agmt No. A3896F

*3.2. Adopt Plans and Specifications and Authorize Advertisement for Bids for the Almaden Valley Pipeline Inspection and Rehabilitation Project, Project No. 95084002 Contract No. C0631 (City of San Jose, Town of Los Gatos, and Unincorporated Santa Clara County), (Districts 4 and 7). 17-0554

Recommendation:

A. Adopt the plans and specifications and authorize advertisement for bids for inspection and rehabilitation of the Almaden Valley Pipeline per the Notice to Bidders;

B. Authorize the Designated Engineer to issue addenda, as necessary, during the bidding process; and

C. Find that the Almaden Valley Pipeline Inspection and Rehabilitation Project is substantially complex and, therefore, requires a construction contract retention of 10 percent.

Manager: Christopher Hakes, 408-630-3796

Attachments:

Attachment 1: Notice to Bidders

Attachment 2: Project Delivery Process Chart

Attachment 3: Map

*Supplemental Agenda Memo

*Supplemental Attachment 1

3.3. Report of Bids Received and Award of Construction Contract to Dixon Marine Services Inc. - for Construction of the Palo Alto Flood Basin Tide Gate Structure Improvements Project, Project No. 10394001, Contract No. C0630 (Palo Alto) (District 7). (Continued from 07/25/2017) 17-0525

Recommendation:

A. Ratify Addenda No. 1 through No. 3 to the Contract Documents for the Palo Alto Flood Basin Tide Gate Structure Improvements Project, Project;

B. Waive minor irregularities in Dixon Marine Services Inc. bid;

C. Award the Construction Contract to Dixon Marine Services Inc. in the sum of $579,081.07; and

D. Approve a contingency sum of $60,000 and authorize the Interim Chief Executive Officer or designee to approve individual change orders up to the designated amount.

Manager: Ngoc Nguyen, 408-630-2632

Attachments: Attachment 1: Project Map
Attachment 2: Addenda Nos. 1 through 3

*3.4. CEO Bulletins for the Weeks of July 21-27, and July 28 through August 3, 2017. 17-0531

Recommendation: Accept the CEO Bulletins.

Manager: Norma Camacho, 408-630-2084

Attachments: Attachment 1: 072717 CEO Bulletin
*Attachment 2: 080317 CEO Bulletin

*3.5. Approval of Minutes. 17-0524

Recommendation: Approve the minutes.

Manager: Michele King, 408-630-2711

Attachments: Attachment 1: 071117 Closed Session & Regular Minutes

REGULAR AGENDA:

4. BOARD OF DIRECTORS:

4.1. Resolution Setting Time and Place of Regular Meetings of the Santa Clara Valley Water District Board of Directors. 17-0444

Recommendation:

A. Discuss current regular Board meeting schedule and identify if the dates and times meet the needs of the Board and public;

B. If the current schedule is adequate, Adopt the RESOLUTION SETTING TIME AND PLACE OF MEETINGS OF THE BOARD OF DIRECTORS OF THE SANTA CLARA VALLEY WATER DISTRICT AND RESCINDING RESOLUTION NO. 17-09; or

C. If revisions to the Board meeting dates and/or times are identified, direct the Clerk of the Board to return with a resolution adopting new schedule.

Manager: Michele King, 408-630-2711

Attachments: Attachment 1: SCVWD Resolution 17-09

Attachment 2: Proposed Revised Resolution

Est. Staff Time: 5 Minutes

4.2. Proposed Revisions to Board Governance Policies - Governance Process GP-7 - Values Statement - Documenting the Management Goal to Ensure the District Allows for Work, Life Balance and is Identified as an Employer of Choice. 17-0478

Recommendation: Approve the proposed revisions to Governance Process GP-7 - Value Statement, reflecting the Board's identified management goal to ensure the District allows for work, life balance and is identified as an Employer of Choice.

Manager: Michele King, 408-630-2711

Attachments: Attachment 1: Redlined Version of GP-7

Attachment 2: Finalized Version of GP-7

Est. Staff Time: 5 Minutes

4.3. Consideration of Action Prohibiting Use of District Funds for Employee Travel to States Listed on the California State Attorney General's Website that Have Laws Discriminatory to the Lesbian, Gay, Bisexual, and Transgender Community, and Consideration of Rescission of Previously Adopted Resolution No. 10-42, Prohibiting Use of District Funds for Employee Travel to Arizona (Response to BMR-17-002). 17-0163

Recommendation:

A. Authorize the Interim Chief Executive Officer to order all District departments to prohibit use of District funds for employee travel to states identified by the California State Attorney General (AG) on the AG's website because these states have passed discriminatory laws against the Lesbian, Gay, Bisexual, and Transgender (LGBT) community as described in California Government Code section 11139.8, except for the following purposes:

1. Enforcement of California law, including auditing and revenue collection;
2. Litigation;
3. To meet contractual obligations incurred before August 8, 2017;
4. To comply with requests by the federal government to appear before committees;
5. To participate in meetings or training required by a grant or required to maintain grant funding;
6. To complete job-required training necessary to maintain licensure or similar standards required for holding a position, in the event that comparable training cannot be obtained in California or a different state; or
7. For the protection of public health, welfare, or safety, or critical to the mission of the Santa Clara Valley Water District (District), as determined by the District; and

B. Rescind Board Resolution 10-42 adopted on May 25, 2010 that prohibited the use of District funds for official business and employee travel to Arizona, because the Arizona laws that were the subject of that Resolution, Senate Bill 1070 and House Bill 2162, which were discriminatory laws against immigration, have been struck down by the U.S. Supreme Court.

Manager: Rachael Gibson, 408-630-2884

Attachments: Attachment 1: SCVWD Resolution No. 10-42

Est. Staff Time: 5 Minutes

*4.4. Board Ad Hoc Committee for Coyote Creek Flood Risk Reduction - Responding to BMR No. R-17-0021, and Creek Management Update. 17-0553

Recommendation:

A. Receive an update on District creek management actions in Coyote Creek, since the February 21, 2017 (Presidents' Day Weekend) flood event;

B. Discuss and determine whether an Ad Hoc Committee for Coyote Creek Flood Risk Reduction will be established;

C. Discuss and determine the need, purpose, and scope of the proposed Coyote Creek Flood Risk Reduction Ad Hoc Committee; and

D. If an Ad Hoc Committee will be formed, discuss and determine committee membership.

Manager: Afshin Rouhani, 408-630-2616

Attachments:
*Item 4.4-A - Handout, Irvin
*Item 4.4-B - Handout, Imelda
*Supplemental Agenda Memo
*Supplemental Attachment 1

Est. Staff Time: 10 Minutes

*4.5. Homeless Encampment Ad Hoc Committee's Recommendations and Associated Staff Analysis from the Committee's May 15, 2017, Meeting. 17-0499

Recommendation:

A. Consider and act on the following recommendations by the Board's Homeless Encampment Ad Hoc Committee:

1. When District-owned residential rental properties that were purchased for projects and not in-lieu become available and are deemed suitable by the District and applicable city, the Santa Clara County Office of Supportive Housing will be contacted to be given the first opportunity to consider the properties for housing for the homeless;
2. Approve utilizing a portion of net rental income from properties purchased through Watersheds (Fund 12) to fund the homeless encampment cleanup project and for development of a pilot program that focuses on the impacts of homeless encampments in each city where the net rental income is being utilized, with transfer or reallocation to begin in Fiscal Year (FY) 2020:
   i. Up to ninety (90) percent of each FY's net rental income will be utilized to fund the Safe, Clean Water and Natural Flood Protection Program Encampment Cleanup Project (SCW Project B4) through FY 2028; and
   ii. Up to 10 percent of each FY's net rental income will be utilized to develop a pilot program to help address waterway and stream stewardship impacts of homeless encampments in each city with Fund 12 District-owned residential rental properties, which will be implemented through FY 2021, at which time staff will assess the pilot program and return to the Board with a recommendation on whether to continue its implementation; and
3. Direct the Capital Improvement Program (CIP) Committee to review Recommendation A2's proposed transfer from Fund 12 to Fund 26 for Safe, Clean Water and Natural Flood Protection (SCW) Project B4 and the use of those Fund 12 funds for the pilot program to help address waterway and stream stewardship impacts of homelessness in light of other Fund 12 capital project funding needs; and return to the Board with a recommended annual transfer amount into SCW Project B4 to be implemented from FY 2020 to FY 2028 and for the pilot program from FY 2020 to FY 2021; and

B. If the Board approves Recommendation A1 above, then adopt the AMENDED AND RESTATED DISTRICT RESOLUTION RESCINDING RESOLUTION NO. 09-78 AND ADOPTING A PROCEDURE TO LEASE DISTRICT REAL PROPERTY, which modifies the District's leasing procedure to enable District-owned residential rental

properties to be offered to the Santa Clara County Office of Supportive Housing for housing for the homeless.

Manager: Melanie Richardson, 408-630-2035

Attachments: Attachment 1: Resolution

Est. Staff Time: 10 Minutes

*4.6. Board Committee Reports 17-0557

Attachments: Handout 4.6-A 072417 BPPC Meeting Board Summary
Handout 4.6-B 071217 Pacheco Meeting Summary
Handout 4.6-C Jan-Jul 2017 Ag Water Meeting Summary

5. WATER UTILITY ENTERPRISE:

*5.1. Report of Bids Received and Award of Construction Contract to Kiewit Infrastructure West Co. for the Pacheco Conduit Inspection and Rehabilitation Project, Project Nos. 91214001 and 95084002, Contract No. C0629 (Unincorporated County), (District 1). 17-0437

Recommendation:

A. Ratify Addendum Nos.1, 2, and 3 to the Contract documents for the Pacheco Conduit Inspection and Rehabilitation Project;

B. Waive minor irregularity in Kiewit Infrastructure West Co. Bid;

C. Award the Contract to Kiewit Infrastructure West Co., in the sum of $3,045,000; and

D. Approve a contingency sum of $456,000 and authorize the Chief Executive Officer or designee to approve individual change orders up to the designated amount.

Manager: Christopher Hakes, 408-630-3796

Attachments: Attachment 1: Addendum No 1-3
Attachment 2: Project Delivery Process Chart
Attachment 3: Map

Est. Staff Time: 5 Minutes

6. WATERSHEDS: None.

7. EXTERNAL AFFAIRS:

7.1. Recommended Positions on Federal Legislation: S 731 (Feinstein) and HR 1738 (Garamendi)-Sacramento-San Joaquin Delta National Heritage Area Establishment Act (Continued from May 23, 2017). 17-0387

Recommendation: Adopt positions of "Support" on S 731 (Feinstein) and HR 1738 (Garamendi)-Sacramento-San Joaquin Delta National Heritage Area Establishment Act.

Manager: Rachael Gibson, 408-630-2884

Est. Staff Time: 5 Minutes

7.2. Recommended Position on Federal Legislation - S 1464 (Feinstein) - Water Conservation Tax Parity Act. 17-0465

Recommendation: Adopt a position of "Support" on: S 1464 (Feinstein) - Water Conservation Tax Parity Act.

Manager: Rachael Gibson, 408-630-2884

Est. Staff Time: 5 Minutes

*7.3. Update on Public Perception Poll and Proposed Public Education Campaign and Water Truck Designs. 17-0556

Recommendation:

A. Receive update on the public opinion poll conducted June 7-11, 2017;

B. Provide input on proposed messaging and public education campaign; and

C. Select and approve artwork for water truck.

Manager: Rick Callender, 408-630-2017

Attachments: *Supplemental Agenda Memo
*Supplemental Attachment 1

Est. Staff Time: 10 Minutes

8. CHIEF EXECUTIVE OFFICER:

8.1. Chief Executive Officer Report.

9. ADMINISTRATION: None.

10. DISTRICT COUNSEL: None.

11. ADJOURN:

11.1. Board Member Reports/Announcements.

11.2. Clerk Review and Clarification of Board Requests.

11.3. Adjourn to 3:30 p.m. Closed Session and 6:00 p.m. Regular Meeting, on August 22, 2017, in the Santa Clara Valley Water District Headquarters Building Boardroom, 5700 Almaden Expressway, San Jose, California.

Santa Clara Valley Water District

File No.: 17-0504

Agenda Date: 8/8/2017
Item No.: *2.1.

NON-EXHIBIT/CLOSED SESSION ITEM

SUBJECT:

Item Removed from Agenda

Santa Clara Valley Water District

File No.: 17-0526

Agenda Date: 8/8/2017
Item No.: *2.2.

NON-EXHIBIT/CLOSED SESSION ITEM

SUBJECT:

CLOSED SESSION
CONFERENCE WITH LEGAL COUNSEL
Initiation of Litigation
Pursuant to Government Code Section 54956.9(d)(4)
One Potential Case

Santa Clara Valley Water District

File No.: 17-0462

Agenda Date: 8/8/2017
Item No.: 2.7.

BOARD AGENDA MEMORANDUM

SUBJECT:
Resolution Expressing Appreciation to Christian C. Elias.

RECOMMENDATION:
Adopt the Resolution EXPRESSING APPRECIATION TO CHRISTIAN C. ELIAS.

SUMMARY:
The resolution provides the Board an opportunity to express their appreciation to Mr. Christian C. Elias for his 16 years of service to the Santa Clara Valley Water District upon his retirement.

FINANCIAL IMPACT:
There is no financial impact associated with this item.

CEQA:
The recommended action is a ministerial action and thus is not subject to the requirements of CEQA.

ATTACHMENTS:
Attachment 1: Resolution

UNCLASSIFIED MANAGER:
Norma Camacho, 408-630-2084

RESOLUTION NO. 17-

EXPRESSING APPRECIATION

TO

Christian C. Elias

WHEREAS, Christian C. Elias began his career with the Santa Clara Valley Water District (water district) in 2000 as a Senior Project Manager in the Government Relations Unit where he managed the development of supplemental funding to advance the water district's objectives, with an emphasis on securing grants; and

WHEREAS, Christian C. Elias developed and successfully implemented the Board of Directors' first pilot grant program, Grant-In-Aid, to form community-based partnerships to advance the water district's mission. Building on the success of the Grant-In-Aid pilot program, the Board of Directors formalized a Watershed Stewardship Grant Program to support the watershed stewardship efforts of local, non-profit organizations to enhance ecosystem health, water supply, and water quality in Santa Clara County; and

WHEREAS, Christian C. Elias was promoted in November 2003 as the first CEO/Board Support Officer of the Office of CEO/Board Support where he provided direct and highly responsible executive and governance support to the CEO and Board of Directors; and

WHEREAS, Christian C. Elias was instrumental in setting the standard for strategic governance support to the Board through his ability to work collaboratively with local agencies, stakeholders, constituents, community leaders, Board committees, managers, and staff to keep Board members current on time-sensitive issues and activities within their respective districts; and

WHEREAS, Christian C. Elias was promoted in October 2006 to Assistant Officer of the Water Utility Operations Division where he was responsible for the treatment and distribution of drinking water to the water district's water retail customers and in August 2008, planned, organized, managed, and directed the functions and activities of the Office of Technical Support within the Water Utility Enterprise; and

WHEREAS, Christian C. Elias was promoted in March 2009 to Watersheds as the Deputy Operating Officer for the Guadalupe/Lower Peninsula/West Valley

Watersheds Division and subsequently assumed the role of Deputy Operating Officer of the Watersheds Operations and Maintenance Division to provide program management and administrative supervision to the field operations and technical support activities to provide countywide protection of the water district's waterways and related assets; and

WHEREAS, Christian C. Elias assumed the role of Deputy Administrative Officer in April 2016 and led the Office of CEO Support, Communications Unit, Labor Relations, Diversity and Inclusion Program, and CEO Management Audit Program in in support of the Interim Chief Executive Officer; and

WHEREAS, Christian C. Elias has passionately supported and served his community over the years through diverse volunteer and professional affiliations, including the San Jose/Silicon Valley National Association for the Advancement of Colored People, Santa Clara Valley Transportation Authority, Santa Clara County Central YMCA, National Forum for Black Public Administrators, Santa Clara County League of Conservation Voters, Silicon Valley Pollution Prevention Center, Bay Area Air Quality Management District, and City of Sunnyvale Child Care Advisory Board, to name a few; and

WHEREAS, Christian C. Elias' experience in the development and advocacy of environmental policies helped advance the water district's mission of providing Silicon Valley safe, clean water for a healthy life, environment, and economy; and

WHEREAS, Christian C. Elias has provided civic leadership and loyalty throughout his seventeen years of service; and

NOW, THEREFORE, BE IT RESOLVED that the Board of Directors of the Santa Clara Valley Water District does hereby formally express its appreciation to Christian C. Elias for his service as Deputy Administrative Officer, Office of the CEO.

PASSED AND ADOPTED unanimously by the Board of Directors of the Santa Clara Valley Water District on

ATTEST: MICHELE L. KING

SANTA CLARA VALLEY WATER DISTRICT

_____
Clerk/Board of Directors

_____
JOHN L. VARELA
Chair/Board of Directors

File No.: 17-0508

Agenda Date: 8/8/2017
Item No.: 2.8.

BOARD AGENDA MEMORANDUM

SUBJECT:
Public Hearing to Consider Adoption of Resolution of Necessity Relating to Acquisition of Real Property Interests Located in the City of Milpitas, of Unknown Ownership, Necessary to Complete the Lower Berryessa Creek Flood Protection Phase 2 Project (Project No. 40174005).

RECOMMENDATION:
A. Conduct a public hearing to consider adoption of Resolution of Necessity (RON) (Attachment 1) relating to acquisition of real property interests from unknown owner on property described and depicted in the plats and legal description included as Exhibit 1 (Attachment 2) and Exhibit 2 (Attachment 3) of the RON; and

B. Adopt the RON determining and declaring the Public Necessity for the Acquisition of Certain Real Property or Interests in Real Property by Eminent Domain for the Lower Berryessa Creek Flood Protection Project Phase 2 (Code of Civil Procedure Sections 1245.220, et seq.) by a two-thirds vote.

SUMMARY:
The Lower Berryessa Creek Flood Protection Project (Project) provides flood protection from a one-percent chance event to the businesses and residents in Milpitas. The Project extends approximately 1.6 miles from its confluence with Lower Penitencia Creek upstream to Calaveras Boulevard. Phase 1 of the Project is approximately 2,200 feet long and extends from the confluence with Lower Penitencia Creek to downstream of the Abel Street Overcrossing. Phase 2 is approximately 6,400 feet long and extends from downstream of the Abel Street Overcrossing to Calaveras Boulevard.

On June 9, 2015, the Board awarded a construction contract to Brosamer & Wall, Inc., for Phase 1 of the Project. On June 28, 2016, the Board awarded a construction contract to Brosamer & Wall, Inc., for Phase 2 of the Project. The goal is to complete construction of the Project by December 2017, to avoid impacts to the opening and operations of the Milpitas BART Station and construction of the Upper Berryessa Creek Project by the U.S. Army Corps of Engineers (USACE). Phase 2 work elements include: raising and reconstruction of levees on the easterly side of the channel, channel widening through replacement of the westerly levee with floodwalls, raising of a pedestrian bridge, integration of maintenance roads adjacent to the floodwalls, construction of access ramps, and

installing mitigation planting.

Acquisition of the Property Interests. To construct Phase 2, the Santa Clara Valley Water District (District) needed to acquire property that was previously utilized as Main Street and was abandoned by the City of Milpitas when the Abel Street Bridge was completed in 1976. Due to the uncertain ownership of the property, a professional title examiner, Pacific States Title Services (Pacific) conducted a record search. Even though the record search could not identify all the owners, the record search did ascertain that one known prior property owner was Ruth L. Curtner, who is now deceased. After exercising reasonable diligence, staff identified one probable heir, Crayton Jones, but was unable to obtain sufficient documentation confirming that he was in fact the current owner, and he was unwilling to initiate a quiet title action to confirm his ownership.

Unable to identify all actual owners, the District could not obtain title insurance for this property and could not reasonably offer to purchase the property from the identified possible owners. The District's only recourse was to pursue acquisition of this property by eminent domain with service of process by publication. The condemnation action might not result in any determination of current ownership, but it would transfer ownership to the District while guarding against adverse ownership claims. The Board adopted a RON on October 13, 2015 to commence the eminent domain process.

Since adoption of the RON, the District's Special Counsel filed the Complaint, completed service of process by publication, and obtained an Order Granting Motion for Prejudgment Possession (OPP) for this property, which was effective March 22, 2016. The OPP allowed and continues to enable the District to use this property to construct Phase 2 of the Project in a timely fashion. Crayton Jones is now deceased, but two purported heirs of Crayton Jones, Joan Jones, and Sandra Jones, filed an answer claiming ownership by inheritance.

During litigation, District staff discovered that the wrong legal descriptions and plats were provided to the Board and attached to the October 13, 2015 RON. This resulted from a single error in the plat map produced by Pacific. The report produced by Pacific correctly identified "Parcel One," the westerly half of Main Street, as belonging to the last known owner Ruth Curtner. However, the plat map prepared by Pacific mistakenly labeled the *easterly* half of Main Street as Parcel One. The District's Land Surveying & Mapping Unit then used the erroneous plat map to prepare the plat map and legal description that were attached to the proposed RON that the Board eventually adopted on October 13, 2015. This important factual error contained in both the RON legal description and RON plat map have been incorporated in several key pleadings filed in the eminent domain litigation. This error must be corrected for the District to acquire the property needed for the Project.

The Pacific report identified Standard Realty and Development Company (Standard) as the sole owner of the easterly half of Main Street. Because the District mistakenly believed that Standard was the sole owner of the westerly half of Main Street that portion was not included in the October 13, 2015 RON. The District received two quitclaim deeds from Standard relinquishing any claim to the Main Street property. However, a subsequent title report prepared by Old Republic Title Company has raised questions about the ownership of both the westerly and easterly halves of Main Street. After diligent research, no current owners of either side of Main Street could be identified.

Because of this, the most prudent course of action is to pursue acquisition of the entire portion of Main Street located within the Project by eminent domain through publication of notice. Acquisition of both sides is necessary for this Project because the creek flows over both halves of Main Street, and the planned Project improvements will occupy both halves of Main Street. The condemnation action may not result in any determination of current ownership, but it will transfer ownership to the District while guarding against adverse ownership claims by unknown parties. Should the Board adopt this proposed RON, special counsel will seek leave of the court to amend the current litigation to include the entire portion of Main Street located within the Project.

This public hearing by the Board and the adoption of the RON are legal preconditions to the exercise of the District's power of eminent domain and to special counsel's ability to amend existing pleadings to reflect accurately the property needed for the Project. Code of Civil Procedure Section 1245.230 requires that the Board make the following findings and that each be included in the RON:

1. The public interest and necessity require the proposed project. In order to provide one percent flood protection to properties along the Project in the City, the District must acquire the entire portion of Main Street within the Project to construct channel, floodwalls, ramps, and maintenance roads; and

2. The proposed project is planned or located in a manner that will be most compatible with the greatest public good and the least private injury. This project design necessarily impacts this private property because the property lies within the creek. The District is acquiring this property to provide the conveyance capacity necessary to reduce flood risk from the one percent flood event in the City of Milpitas. The District has considered other alternatives, but constraints from private structures on adjacent properties made consideration of those alternatives infeasible. This is the least intrusive project design at this location.

3. The property described in the RON is necessary for the proposed project. All property described in the RON is part of the existing creek. While likely owned by private parties, it is not usable for private purposes resulting in only nominal, if any, impact to private ownership. The property described in the RON will be used for the future channel improvements.

4. That either an offer consistent with the requirements of the Government Code has been made or that the owners cannot be located with reasonable diligence. Staff has worked diligently to identify the current owners of the property, but has been unable to do so with assurance. As a result, it was not possible to make a statutory offer of compensation.

FINANCIAL IMPACT:
The property acquisition costs will be funded from the Project's budget for FY 2018. The District will be responsible for the appraised value of the parcel and any court ordered eminent domain costs. The appraised value for the real property interest to be acquired is $52,800.00. There is available funding in the FY 2018 budget for this project.

CEQA:
The District is the lead agency under the California Environmental Quality Act for this Project. The Board adopted the Final Environmental Impact Report on December 13, 2011.

ATTACHMENTS:
Attachment 1: Resolution of Necessity
Attachment 2: Exhibit 1 Plat and Legal Description
Attachment 3: Exhibit 2 Plat and Legal Description
Attachment 4: PowerPoint

UNCLASSIFIED MANAGER:
Ngoc Nguyen, 408-630-2632

BOARD OF DIRECTORS
SANTA CLARA VALLEY WATER DISTRICT

RESOLUTION NO. 17-

DETERMINING AND DECLARING THE PUBLIC NECESSITY FOR THE ACQUISITION OF CERTAIN REAL PROPERTY OR INTERESTS IN REAL PROPERTY BY EMINENT DOMAIN FOR THE LOWER BERRYESSA CREEK FLOOD PROTECTION PHASE 2 PROJECT (PROJECT NO. 40174005) (CODE OF CIVIL PROCEDURE SECTIONS 1245.220, *et seq.*)

WHEREAS, the Lower Berryessa Creek Flood Protection Project (Project) provides flood protection from a one-percent chance event to the community in Milpitas. The Project extends approximately 1.6 miles from its confluence with Lower Penitencia Creek upstream to Calaveras Boulevard; and

WHEREAS, construction of Phase 1 of the Project, approximately 2,200 feet long, is complete, and Phase 2, approximately 6,400 feet long, began in June 2016; and

WHEREAS, the District is authorized to condemn property for the Project pursuant to Article I, Section 19 of the California Constitution, Part 3, Title 7 of the California Code of Civil Procedure, Section 6 of the Santa Clara Valley Water District Act, and other provisions and principles of law; and

WHEREAS, the property interest to be acquired for the Project was previously utilized as North Main Street, and it was abandoned by the City of Milpitas when the Abel Street Bridge was completed. Property vacation documents (City of Milpitas resolution 2626) referenced the city retaining easement rights. This property interest is described and shown in more detail in Exhibit 1 and Exhibit 2 (Fee Title) attached hereto and incorporated herein (the "Property"); and

WHEREAS, the Project cannot be completed without the Property, and acquisition of the Property is accordingly necessary and in the public interest; and

WHEREAS, the use of the Property for the Project will not interfere with or impair any known, existing public uses and, therefore, is compatible with any other public uses pursuant to Code of Civil Procedure section 1240.510; and

WHEREAS, a record search did not identify the present owner nor identify an existing deed for the property, and the District could not obtain a title insurance policy for this property; and

WHEREAS, after exercising reasonable diligence to locate the property's owners, the District was able to identify possible heirs to prior, deceased owners, but was unable to obtain sufficient documentation to confirm that the persons were in fact heirs to the estate; therefore, no offer was made; and

WHEREAS, the District calendared consideration of a Resolution as an item on its Agenda and invited public comment prior to the meeting; and

WHEREAS, the District's Board of Directors held a public hearing on October 13, 2015 to consider the adoption of this resolution, and all known interested parties were given an opportunity to be heard; and

WHEREAS; the District's Board of Directors adopted Resolution No. 15-66, authorizing condemnation of only the property described in Exhibit 2, being the easterly half of Main Street within the Project; and

WHEREAS; on November 10, 2015, Special Counsel for the District filed Case No. 1-15-CV-287904, seeking to condemn only the property described in Exhibit 1; and

WHEREAS; subsequent information disclosed the existence of errors in the legal description used in Resolution No. 15-66, and the pleadings associated with Case N. 1-15-CV-287904, requiring correction; and

WHEREAS, Standard Realty and Development Company (Standard) quitclaimed to the District any interest to both the easterly and westerly halves of Main Street; and

WHEREAS, a subsequent title report raised questions about the ownership of both the westerly and easterly halves of Main Street; and

WHEREAS, because the District mistakenly believed that Standard was the sole owner of the westerly half of Main Street that portion was not included in Resolution No. 15-66 approved at the October 13, 2015 RON public hearing; and

WHEREAS; the determination has been made that the property interests described in Exhibit 1 and Exhibit 2, are required for the project; and

WHEREAS, two defendants have appeared in this case to assert their interest in this property but have not yet proven they are the rightful heirs; and

WHEREAS, due to the inability to identify the actual owners of the property, the District was not able to and is not required to mail the Notice of Intention to Adopt Resolution of Necessity (RON) pursuant to California Civil Code Procedure Section 1245.235; and

WHEREAS, the two purported heirs that have appeared in this case have been advised of the hearing on this RON; and

WHEREAS, the District has calendared consideration of this RON as an item on its Agenda and invited public comment prior to the meeting; and

WHEREAS, the District's Board of Directors held a public hearing on August 8, 2017, to consider the adoption of this resolution, and all interested parties were given an opportunity to be heard.

NOW, THEREFORE, BE IT RESOLVED, that the Board of Directors of the District finds, determines, and hereby declares:

1. The public interest and necessity require the Project.
2. The Project is planned or located in a manner that will be most compatible with the greatest public good and the least private injury.
3. The Property described herein in Exhibits 1 and Exhibit 2 is necessary for the Project.
4. After exercising reasonable diligence, the District was unable to definitively identify the appropriate property owner(s); therefore, the District did not make an offer.
5. Due to the inability to identify the actual owners of the property interests, the District was unable to and is not required to mail the Notice of Intention to Adopt Resolution of Necessity pursuant to California Code of Civil Procedure Section 1245.235.
6. Even though no offer was made, the two, most likely owners have been advised of the hearing on this RON.

7. The District has complied with all conditions and statutory requirements necessary to exercise the power of eminent domain to acquire the Property.

8. The District has complied with the requirements of the California Environmental Quality Act ("CEQA") for the Project, the District's Board having on December 13, 2011, certified a Final Environmental Impact Report for the Project.

9. The District's Office of the District Counsel and/or its designee is hereby authorized to amend the complaint in its eminent domain proceeding and continue prosecuting that proceeding to acquire the Property, to deposit the amount of probable compensation pursuant to Code of Civil Procedure section 1255.010, and to acquire prejudgment possession of the Property as may be necessary for the Project.

PASSED AND ADOPTED by the Board of Directors of Santa Clara Valley Water District by the following vote on August 8, 2017.

AYES: Directors

NOES: Directors

ABSENT: Directors

ABSTAIN: Directors

SANTA CLARA VALLEY WATER DISTRICT

By: _____
RICHARD P. SANTOS
Vice Chair/Board of Directors

ATTEST: MICHELE L. KING, CMC

_____
Clerk/Board of Directors

THIS PAGE INTENTIONALLY LEFT BLANK

EXHIBIT - 1

SANTA CLARA VALLEY WATER DISTRICT
San Jose, California

By: B. Snyder
Date: 10/08/10

Date Revised: 11/16/16
Revised By: SJP

PROJECT: BERRYESSA CREEK
PROPERTY: STANDARD REALTY & DEVELOPMENT COMPANY, ET AL File No.: 4017-79

All that certain real property situate in the City of Milpitas, County of Santa Clara, State of California, described as follows:

The easterly one half width of the following described parcel of land:

Being a portion of North Main Street (Abandoned) as described in the Resolution and Order Vacating Portions of North Main Street, recorded August 13, 1976, in Book C214, at page 614 as Document Number 5380470 of Official Records, and also being a portion of the lands shown as North Main Street on that certain Record of Survey filed in Book 334 of Maps at page 54, and also being shown on that certain Record of Survey filed in Book 211 of Maps at pages 22 and 23, all documents are in the office of the Recorder, County of Santa Clara, State of California, to wit:

BEGINNING at the intersection of the westerly line of North Main Street (Abandoned) as described in said Resolution with the northerly line of the lands granted to the Santa Clara Valley Water District in the deed recorded as Document Number 5365630 of Official Records, Santa Clara County Records; thence S47°09'30"E 106.95 feet to a point on the easterly line of North Main Street (Abandoned), said point also being the most northerly corner of lands granted to the Santa Clara Valley Water District in the deed recorded as Document Number 5313086 of Official Records, Santa Clara County Records; thence along said easterly line of said North Main Street (Abandoned), S09°03'10"E 790.47 feet to the most northerly corner of the lands described as PARCEL 6 granted to the Santa Clara Valley Transportation Authority in the deed recorded as Document Number 16678056 of Official Records, Santa Clara County Records; thence leaving said easterly line of said North Main Street (Abandoned), N22°43'44"W 279.15 feet to a point on the intersection of the westerly line of North Main Street (Abandoned) with the easterly line of the lands described as PARCEL 5 granted to the Santa Clara Valley Transportation Authority in the deed recorded as Document Number 16678056 of Official Records, Santa Clara County Records; thence along said westerly line of said North Main Street (Abandoned), N09°03'10"W 603.39 feet to the POINT OF BEGINNING.

Containing 0.563 acre of land, more or less.

SURVEYOR'S STATEMENT:

The description was prepared by me or under my direction in conformance with the requirements of the Land Surveyor's Act.

Gisela Silke Jobst, L9169

11/21/2016
Date

LICENSED LAND SURVEYOR
GISELA SILKE JOBST
L9169
STATE OF CALIFORNIA

W:\ROW\00PROJECTS\BERRYESSA CREEK\Berryessa Ck AA\Plats\4017-79.doc

STANDARD REALTY & DEVELOPMENT COMPANY, ET AL

NORTH ABEL STREET

LOT 16

LOT 15

LOT 14

S47°09'30"E 106.95'

P.O.B.

STANDARD REALTY & DEVELOPMENT COMPANY, ET AL

HEIRS AND DEVISEES OF RUTH CURTNER, ET AL

N09°03'10"W

S09°03'10"E

NORTH MAIN STREET (Abandoned) (Resolution No. 2626) Doc. 5380470

S.C.V.W.D. DOC. 5365630 022-31-016

S.C.V.W.D. ESM'T. DOC. 5369179

S.C.V.W.D. ESM'T. DOC. 20756028

S.C.V.W.D. DOC. 5313086 028-19-063

MICHIGAN ROAD

JENNIFER WAY

ERIE CIRCLE

HIDDEN LAKE VILLAGES VILLAGE 1 AMENDED MAP TRACT 7443 533 - M - 15

ONTARIO ROAD

R.O.S. 334-M-54

SOUTHERN PACIFIC TRANS. CO.

DOC. 16678056

S.C.V.T.A. 022-31-017 PARCEL 5

603.39'

790.47'

R.O.S. 211-M-22 & 23

N22°43'44"W

279.15'

BERRYESSA CREEK

WRIGLEY FORD CREEK

S.C.V.T.A. DOC. 16678056 PARCEL 6

AREA TO BE ACQUIRED
0.563 Ac.±

PROFESSIONAL LAND SURVEYOR
GISELA SILKE JOBST
L9169
11-21-2016
STATE OF CALIFORNIA

SCVWD W:\ROW\00PROJECTS\BERRYESSA CREEK\Berryessa Ck AA\Plats\4017-79.dwg

Santa Clara Valley Water District

SCALE: 1" = 100'

PROJ. NO.	4017
FILE NO.	79
APN	028-19-000
TITLE REPORT NO.	
DRAWN	B. Snyder
DATE	10/07/10

REV.	APPR.	DATE	DESCRIPTION
1	JRC	02/03/14	Westerly one-half belongs to Standard Realty & Development Co. (4017-70)
2	SJP	11/16/16	CORRECT OWNERSHIP

Sheet 1 of 1

EXHIBIT - 2

SANTA CLARA VALLEY WATER DISTRICT
San Jose, California

By: B. Snyder
Date: 10/08/10

Date Revised: 11/16/16
Revised By: SJP

PROJECT: BERRYESSA CREEK
PROPERTY: HEIRS AND DEVISEES OF RUTH CURTNER, ET AL File No.: 4017-70

All that certain real property situate in the City of Milpitas, County of Santa Clara, State of California, described as follows:

The westerly one half width of the following described parcel of land:

Being a portion of North Main Street (Abandoned) as described in the Resolution and Order Vacating Portions of North Main Street, recorded August 13, 1976, in Book C214, at page 614 as Document Number 5380470 of Official Records, and also being a portion of the lands shown as North Main Street on that certain Record of Survey filed in Book 334 of Maps at page 54, and also being shown on that certain Record of Survey filed in Book 211 of Maps at pages 22 and 23, all documents are in the office of the Recorder, County of Santa Clara, State of California, to wit:

BEGINNING at the intersection of the westerly line of North Main Street (Abandoned) as described in said Resolution with the northerly line of the lands granted to the Santa Clara Valley Water District in the deed recorded as Document Number 5365630 of Official Records, Santa Clara County Records; thence S47°09'30"E 106.95 feet to a point on the easterly line of North Main Street (Abandoned), said point also being the most northerly corner of lands granted to the Santa Clara Valley Water District in the deed recorded as Document Number 5313086 of Official Records, Santa Clara County Records; thence along said easterly line of said North Main Street (Abandoned), S09°03'10"E 790.47 feet to the most northerly corner of the lands described as PARCEL 6 granted to the Santa Clara Valley Transportation Authority in the deed recorded as Document Number 16678056 of Official Records, Santa Clara County Records; thence leaving said easterly line of said North Main Street (Abandoned), N22°43'44"W 279.15 feet to a point on the intersection of the westerly line of North Main Street (Abandoned) with the easterly line of the lands described as PARCEL 5 granted to the Santa Clara Valley Transportation Authority in the deed recorded as Document Number 16678056 of Official Records, Santa Clara County Records; thence along said westerly line of said North Main Street (Abandoned), N09°03'10"W 603.39 feet to the POINT OF BEGINNING.

Containing 0.493 acre of land, more or less.

SURVEYOR'S STATEMENT:

The description was prepared by me or under my direction in conformance with the requirements of the Land Surveyor's Act.

Gisela Silke Jobst, L9169 11-21-2016
Date

LICENSED LAND SURVEYOR
GISELA SILKE JOBST
L9169
STATE OF CALIFORNIA

W:\ROW\00PROJECTS\BERRYESSA CREEK\Berryessa Ck AA\Plats\4017-70.doc

HEIRS AND DEVISEES OF RUTH CURTNER, ET AL

NORTH ABEL STREET

LOT 16

LOT 15

LOT 14

S47°09'30"E 106.95'

P.O.B.

STANDARD REALTY & DEVELOPMENT COMPANY, ET AL

N09°03'10"W

S.C.V.W.D. DOC. 5365630 022-31-016

S.C.V.W.D. ESM'T. DOC. 5369179

S.C.V.W.D. ESM'T. DOC. 20756028

S.C.V.W.D. DOC. 5313086 028-19-063

S09°03'10"E

NORTH MAIN STREET (Abandoned) (Resolution No. 2626) Doc. 5380470

HEIRS AND DEVISEES OF RUTH CURTNER, ET AL

603.39'

MICHIGAN ROAD

JENNIFER WAY

ERIE CIRCLE

HIDDEN LAKE VILLAGES VILLAGE 1 AMENDED MAP TRACT 7443 533 - M - 15

ONTARIO ROAD

R.O.S. 334-M-54

SOUTHERN PACIFIC TRANS. CO.

DOC. 16678056 PARCEL 5

S.C.V.T.A. 022-31-017

WRIGLEY FORD CREEK

R.O.S. 211-M-22 & 23

790.47'

BERRYESSA CREEK

N22°43'44"W

279.15'

S.C.V.T.A. DOC. 16678056 PARCEL 6

AREA TO BE ACQUIRED
0.493 Ac.±

PROFESSIONAL LAND SURVEYOR
GISELA SILKE JOBST
19169
11-21-2016
STATE OF CALIFORNIA

SCVWD W:\ROW\00PROJECTS\BERRYESSA CREEK\Berryessa Ck AA\Plats\4017-70.dwg

Santa Clara Valley Water District

SCALE: 1" = 100'

PROJ. NO.	4017
FILE NO.	70
APN	022-31-000
TITLE REPORT NO.	
DRAWN	B. Snyder
DATE	10/07/10

REV.	APPR.	DATE	DESCRIPTION
1	JRC	02/03/14	Easterly one-half belongs to Ruth Curtner (4017-79)
2	SJP	11/16/16	CORRECT OWNERSHIP

Sheet 1 of 1

Public Hearing to Consider Adoption of Resolution of Necessity: Lower Berryessa Creek Flood Protection Project

August 8, 2017

Santa Clara Valley Water District

Project Location Map

Lower Berryessa Creek Flood Protection Project

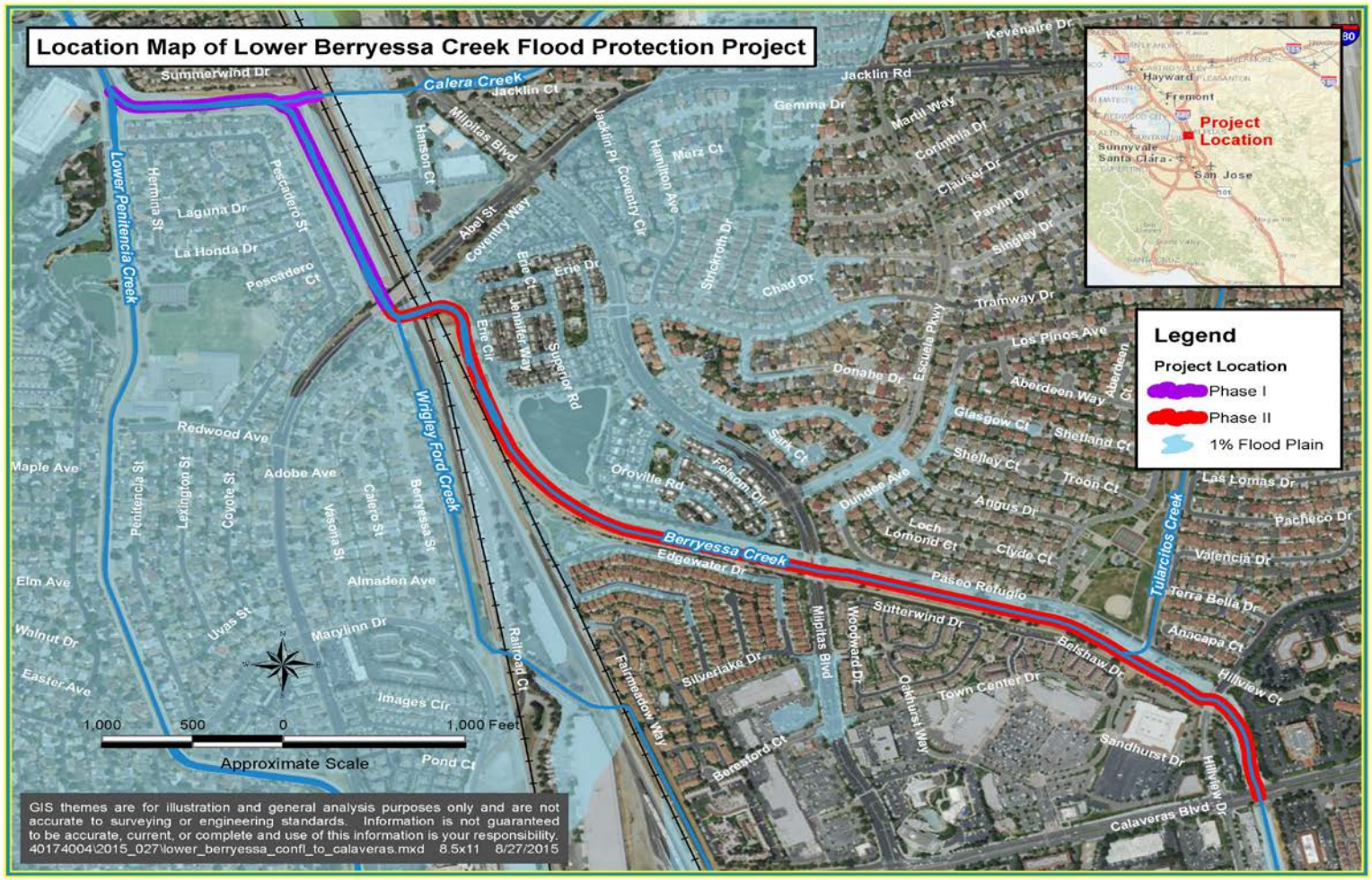

Santa Clara Valley Water District

Public Necessity for the Proposed Project

- Finding: The public interest and necessity require the proposed project:
  - Approximately 1.6 miles from Lower Penitencia Creek upstream to Calaveras Blvd.
  - Provides flood protection from a one-percent chance event to the communities in Milpitas.
  - Improvements include: widening channel, raising levee, constructing floodwall, constructing maintenance access roads & ramps, and planting of vegetation.

Santa Clara Valley Water District

Construction Schedule Requires Timely Acquisition of Property

- Phase 1 construction was complete in December 2016.
- Phase 2 design was completed in March 2016 & property acquisition, other than the subject property, was completed in June 2016.
- Phase 2 construction was awarded in June 2016 and construction began in summer of 2016.
- Completed construction of the Lower Berryessa Creek Flood Protection Project is anticipated for December 2017 to meet the scheduled opening of the new Milpitas BART Station.

Santa Clara Valley Water District

Project Design Serves the Greatest Public Good with the Least Private Injury

- Finding: The proposed project is planned or located in a manner that will be most compatible with the greatest public good and the least private injury
- Achieved through Holistic Approach to Project Design

Santa Clara Valley Water District

Holistic Approach Minimizes Private Injury

- Apply hydraulic modeling and geomorphology
- Locate project in a manner that impacts the least number of private properties
- Preserve native vegetative habitat
- Align project features with the existing creek

Santa Clara Valley Water District

Results in Least Private Injury

- A portion of the R/W needed for Phase 2 was previously utilized as North Main Street and abandoned by the City of Milpitas when Abel Street Bridge was completed.
- The property is located within the creek
- No private structures or access to private structures will be impacted.

Santa Clara Valley Water District

Property is Necessary for the Project

- **Finding:** The property described in the resolution is necessary for the proposed project.
  - In order to provide flood protection to properties along the Project in the City of Milpitas, the District must acquire the property rights specified on the RON.
  - The project features on the following slide cannot be executed without these property rights.

Santa Clara Valley Water District

Subject Property in RON

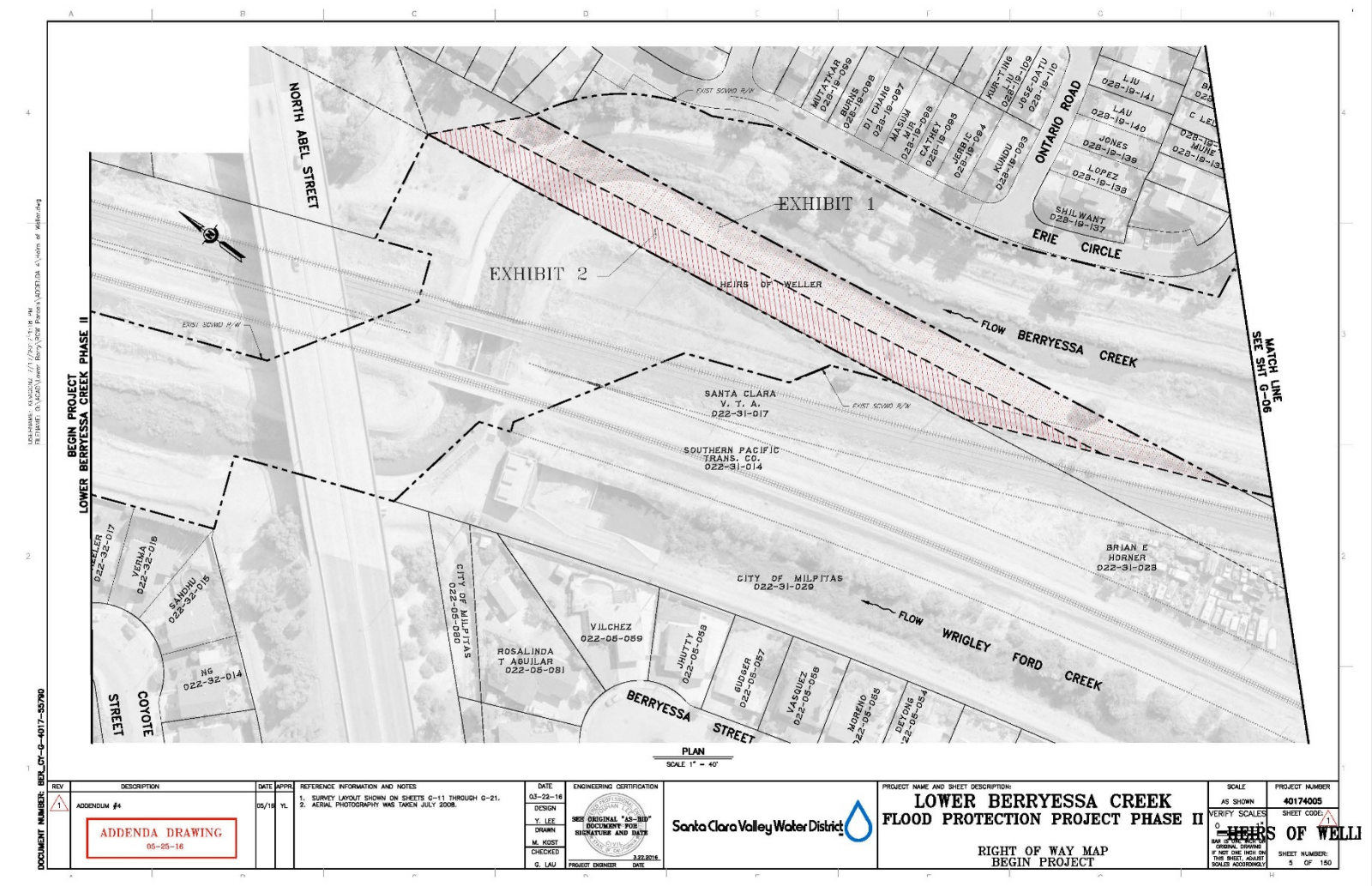

Santa Clara Valley Water District

No Actual Owner Has Been Identified

- **Finding:**
  - A record searches conducted by professional title examiners did not identify the actual owners.
  - No offer was made as required by Cal. Gov. Code Section 7267.2 due to the inability to definitively identify the owners of the property described in the Resolution.
  - After exercising reasonable diligence, parties having possible ownership interests were identified by staff and have been advised of the hearing on this Resolution of Necessity.

Santa Clara Valley Water District

Santa Clara Valley Water District

File No.: 17-0394

Agenda Date: 8/8/2017
Item No.: 3.1.

BOARD AGENDA MEMORANDUM

SUBJECT:
Amendment No. 2 to Agreement No. A3896F with Governmental Advocates, Inc., for State Lobbying Services, Resulting in a Total Not-To-Exceed fee of $334,000.

RECOMMENDATION:

A. Approve Amendment No. 2 to Agreement No. A3896F, with Governmental Advocates, Inc., for state lobbying services to ensure continuity in the District's ability to accomplish its state policy and legislative goals; and

B. Authorize the Interim Chief Executive Officer (ICEO) to sign Amendment No. 2 to extend the term by one year to expire on August 31, 2018, and to increase the not-to-exceed amount to $334,000, for a total increase of $109,200.

SUMMARY:
Governmental Advocates, Inc., is under contract with the District to provide assistance in lobbying at the state level, commencing on September 1, 2015, and continuing until the contract expires, which was initially set for August 31, 2016. Under the contract, the District may extend the term for two one-year periods upon written amendment executed by both parties. The District extended the term for the first of the one-year periods with Amendment No. 1, which was effective on September 1, 2016, and expires on August 31, 2017. This Amendment No. 2, if approved by the Board, would extend the term of the contract by the second allowed one-year period, and would make other changes necessary for this extension.

Specifically, Amendment No. 2 would make the following four changes to the contract.

1. Increases the total payment for services performed pursuant to the scope of services of the contract (the not-to-exceed amount), from $224,800 to $334,000.
2. Sets a payment schedule for a monthly fixed fee amount of $9,100 per month, in keeping with the original contract approved in 2015.
3. Changes the expiration date from August 31, 2017 to August 31, 2018.
4. Extends the completion date of Task No. 1 for state lobbying services from August 31, 2017 to August 31, 2018.

All other terms and conditions of the contract and Amendment No. 1 would remain in full force and effect.

Background

Since 2005, the District has utilized a contract lobbying firm to assist the District in accomplishing its state policy and legislative goals in Sacramento. Prior to that, the District relied only on in-house lobbyists, which created significant gaps in the District's legislative program.

To help address these gaps, the District issued a public Request for Proposals (RFP) for contract lobbying services. The firm selected through that process, Governmental Advocates, Inc., was the successful proposer in numerous subsequent public RFP processes, and continues to represent the District today. The current contract, under which the District pays a flat retainer each month, is managed by the Assistant Officer in the Sacramento Government Relations Office, who is responsible for assigning issues to the consultant and monitoring and evaluating performance. Although the scope of the Agreement is purposefully broad, in general the District utilizes the consultant only on the highest-priority issues.

The services provided by the consultant are needed to allow the District to:

1. Provide supplemental communication to the Governor's office and other administration officials, the Assembly and Senate leadership, legislators outside the Santa Clara County delegation, and other state regulatory entities;

2. Efficiently respond to peaks in workload that are inherent in the legislative process;

3. Achieve maximum participation and coverage on legislative and regulatory issues; and

4. Provide sufficient resources in Sacramento to support and advance the District's legislative and policy agenda.

EL-5 Compliance

Board Policy EL-5.1.2 states that the CEO shall not enter into a consultant service contract greater than $225,000 unless authorized by the Board. This consultant contract amendment requires Board approval because the amended extension amount exceeds $225,000.

Board Policy EL-5.7 does not allow the District to enter into a consultant contract without considering the consultant's past performance.

Since being awarded its first contract with the District in 2005, Governmental Advocates, Inc., has shown outstanding ability to advance District priorities and legislative issues when unexpected challenges have occurred. Their firm has repeatedly achieved the desired outcome of legislative and policy success and has considerable District-specific expertise that has proven valuable on numerous occasions. Building on this foundation, staff recommends that the ICEO be authorized to extend this firm's contract.

FINANCIAL IMPACT:
This is the second amendment issued under this agreement and adequate funding is available in the project budget to cover the proposed amount. This amendment increases the current Board authorized not to exceed amount from $224,800 to $334,000, an increase of $109,200.

CEQA:
The recommended action does not constitute a project under CEQA because it does not have a potential for resulting in direct or reasonably foreseeable indirect physical change in the environment.

ATTACHMENTS:
Attachment 1: Amendment No. 2
Attachment 2: SCVWD Agreement No. A3896F
Attachment 3: SCVWD Amendment No. 1 to Agmt No. A3896F

UNCLASSIFIED MANAGER:
Rachael Gibson, 408-630-2884

AMENDMENT NO. 2 TO STANDARD CONSULTANT AGREEMENT A3896F
BETWEEN
SANTA CLARA VALLEY WATER DISTRICT AND
GOVERNMENTAL ADVOCATES

This Amendment No. 2, effective on September 1, 2017, amends the terms and conditions of Standard Consultant Agreement No. A3896F (Agreement) dated September 1, 2015, as amended by Amendment No.1 dated September 28, 2016, between the SANTA CLARA VALLEY WATER DISTRICT ("District") and GOVERNMENTAL ADVOCATES ("Consultant") collectively, the "Parties."

RECITALS

WHEREAS, Consultant is currently providing State Lobbying; and

WHEREAS, the Agreement, as previously amended, expires on August 31, 2017; and

WHEREAS, the Parties desire to extend the term of the Agreement through August 31, 2018.

NOW, THEREFORE, in consideration for the mutual promises and agreements contained herein and notwithstanding anything to the contrary in the Agreement, Consultant and the District hereby agree as follows:

1. In the Agreement, Revised Appendix Two, Fees and Payments, Section II, Total Authorized Funding Under the Agreement, replace the paragraph in its entirety with the following:

   "Total payment for services performed, as defined in Appendix One - Scope of Services, will not exceed a total amount of **$334,000** during the term of this Agreement. Under no conditions will the total compensation to the Consultant exceed this NTE amount without prior written approval in the form of an amendment to this Agreement executed by the District's Board of Directors ("Board"), or Chief Executive Officer as authorized by the Board. The Consultant guarantees that it will complete the contracted Scope of Services for the **$334,000** NTE Amount."

2. In the Agreement, Revised Appendix Two, Fees and Payments, Section III, Fixed Fees and Payment Schedules, add the following payment schedule as subsection 4:

MONTHLY FIXED FEE PAYMENT SCHEDULE FROM SEPTEMBER 1, 2017 – AUGUST 31, 2018

Task	Description	Monthly Fixed Fee
1	State Lobbying Services	$9,100 per month for Task 1
	Total Monthly Fixed Fee Amount	$9,100 per month

3. In the Agreement, Revised Appendix Three, Schedule of Completion, Section A, replace the paragraph in its entirety with the following:

   This Agreement commences on the date specified in the introductory paragraph of the Standard Consultant Agreement portion of this Agreement. This Agreement expires **August 31, 2018** unless, prior to its expiration, its term is modified by a written amendment hereto, signed by both Parties.

4. In the Agreement, Revised Appendix Three, Schedule of Completion, Section F, delete the Project Schedule table in its entirety with the following:

Task #	Task Description	Start Date	Completion Date
1	State Lobbying Services	09/01/15	08/31/18
2	Additional Services	09/01/15	12/31/15

5. All other terms and conditions of Agreement A3896F, Amendment No.1, not amended as stated herein, remain in full force and effect.

(REMAINDER OF PAGE INTENTIONALLY LEFT BLANK)

(SIGNTAURES FOLLOW ON NEXT PAGE)

IN WITNESS WHEREOF, THE PARTIES HAVE SET FORTH BELOW THEIR CONSENT TO THE TERMS AND CONDITIONS OF THIS AMENDMENT NO. 2 TO AGREEMENT NO. A3896F THROUGH THE SIGNATURES OF THEIR DULY AUTHORIZED REPRESENTATIVES

By: _____

John L. Varela
Chair, Santa Clara Valley Water District

Date: _____

By: _____

Cliff Berg,
President

Date: _____

Firm Address:
1137 11th Street, Suite 400
Sacramento, Ca. 95814

ATTEST:

_____

Michele King, CMC
Clerk/Board of Directors

(REMAINDER OF PAGE INTENTIONALLY LEFT BLANK)

THIS PAGE INTENTIONALLY LEFT BLANK

5750 Almaden Expressway, San Jose, CA 95118-3614 | (408) 265-2600 | www.valleywater.org

Santa Clara Valley Water District

September 1, 2015

Cliff Berg
Governmental Advocates, Inc.
1137 11th Street, Suite 400
Sacramento, CA 95814

Subject: Agreement A3896F between the Santa Clara Valley Water District and Governmental Advocates, Inc.

Dear Mr. Berg,

Enclosed is an enacted copy of **Agreement A3896F** which was executed by the Santa Clara Valley Water District on September 1, 2015. Please retain the enclosed copy for your records and to reference any future correspondence related to this contract with Agreement A3896F.

If you have any questions regarding this Agreement, please contact Project Manager Scott Wilson at (408) 630 – 2621 or by email at swilson@valleywater.org.

Sincerely,

Roderick S. Jefferson Sr.
Supervising Program Administrator
Consultant Contract Services

Enc.: Agreement A3896F

SCVWD ENACTED COPY
Contract Administration Unit
AGMT: A3896F FILE: 4637

Santa Clara Valley Water District

STANDARD CONSULTANT AGREEMENT

C0323 (05-09-14)

THIS AGREEMENT "Agreement" is entered into on September 1, 2015, by and between SANTA CLARA VALLEY WATER DISTRICT, ("District"), and GOVERNMENTAL ADVOCATES, INC. incorporated in the State of California ("Consultant").

WHEREAS District desires certain services hereinafter described and Consultant is capable of providing and desires to provide such services,

NOW, THEREFORE, District and Consultant for the consideration and upon the terms and conditions specified agree as follows:

SECTION I

SCOPE OF SERVICES

The services to be performed under this Agreement are as described in Appendix One attached hereto and incorporated herein by this reference.

SECTION II

DUTIES OF CONSULTANT

All work performed by Consultant or under its direction must be sufficient to meet the purposes specified in this Agreement, and must be rendered in accordance with the accepted practices and standards of Consultant's profession.

Consultant must stay informed of and observe any and all statutes, laws, ordinances, and regulations pertaining to Consultant's contractual performance. To the extent that any copyrighted materials are used or reproduced for use in such performance, Consultant must secure, at its sole cost and expense, any and all necessary permission to utilize or reproduce such materials in the manner proposed or suggested by the scope of services.

Consultant must not undertake any work beyond the scope of this Agreement unless such additional work is approved in advance in writing by District. The cost of such additional work will be reimbursed to Consultant by District on the same basis as provided in Section IV unless otherwise specified.

If in the performance of the services hereunder, it is necessary to conduct investigations or other operations in the field, security and safety of the area of such field operations under the control of the Consultant will be the responsibility of Consultant.

Where services hereunder include preparation of drawings and other contract documents by Consultant and where, notwithstanding acceptance and approval by District thereof, in the opinion of the District, drawings and other contract documents so prepared are found during the course of construction to require modification due to the oversight, inadvertence or negligent omissions of, errors by, or lack of detail provided by Consultant, such modifications must be made by Consultant without additional compensation. Where such contract documents are used in letting a contract for construction, Consultant will assume responsibility for any direct or actual damages suffered or incurred by the District, including, but not limited to, any increase in

compensation due to a construction contractor, which increase is directly attributable to the required changes in the Drawings or other contract documents to the extent caused by Consultant's negligent acts, omissions, or errors.

Consultant is required, at District's request, to meet with District staff regarding performance of the Scope of Services.

In accordance with the provisions of Section 3700 of the California Labor Code, Consultant is required to secure Workers' Compensation insurance for its employees. Consultant must obtain and keep in full force and effect Workers' Compensation insurance necessary in connection with the performance of this Agreement to protect Consultant and its employees under the Workers' Compensation Insurance and Safety Act, including coverage under United States Longshoremen's and Harbor Worker Act, when applicable. Such insurance must be in a standard form and relieve the District of all responsibility therefore. Consultant must, prior to undertaking the work contemplated herein, supply District with a certificate of insurance evidencing that said requirements are fully in effect.

The Santa Clara Valley Water District is an equal opportunity employer and requires its consultants to have and adhere to a policy of equal opportunity and non-discrimination. In the performance of the Agreement, the Consultant will comply with all applicable federal, state, local laws and regulations, and will not discriminate against any subcontractor, employee, or applicant for employment, in the recruitment, selection for training including apprenticeship, hiring, employment, utilization, promotion, layoff rates of pay, or other forms of compensation, or against any other person, on the basis of age (40 and over), ancestry, color, religious creed (including religious dress and grooming practices), disability (mental and physical) including HIV and AIDS, marital status, medical condition (cancer and genetic characteristics), genetic information, military and veteran status, national origin (including language use restrictions), race, sex (which includes pregnancy, childbirth, breastfeeding and medical conditions related to pregnancy, childbirth or breastfeeding), gender, gender identity and gender expression, and sexual orientation. The Consultant's policy must conform with applicable state and federal guidelines including the Federal Equal Opportunity Clause, "Section 60-1.4 of Title 41, Part 60 of the Code of Federal Regulations," Title VII of the Civil Rights Act of 1964 as amended; the American's with Disabilities Act of 1990; the Rehabilitation Act of 1973 (Sections 503 and 504); California Fair Employment and Housing Act (Government Code Section 12900 et. Seq.); California Labor Code Sections 1101 and 1102.

Consultant is responsible for designating a specific person responsible for assuring nondiscrimination and non-harassment as provided in the Agreement. That named individual must investigate all complaints directed to them by District. District will refer complaints in writing, and investigations will be deemed concluded only upon submission of a written investigation report from the Consultant to the District. The scope of such investigations must include not only officers, employees, and agents of the Consultant, but also all subcontractors, subconsultants, materialmen, and suppliers of the Consultant. In cases where such investigation results in a finding of discrimination, harassment, or hostile work environment, Consultant must take prompt, effective disciplinary action against the offender. Failure to take appropriate action is a material breach of the Agreement.

(The remainder of page intentionally left blank.)

SECTION III

DUTIES OF DISTRICT

District agrees to make available to Consultant all data and information in the possession of District which District deems necessary to the preparation of the work, and District will actively aid and assist Consultant in obtaining such information deemed necessary from other agencies and individuals.

The District will authorize a staff person as the District representative to confer with Consultant relative to Consultant services hereunder. The work in progress hereunder will be reviewed by District at each milestone or at the discretion of District. If the District determines that the work is satisfactory and meets the requirements of the Agreement, it will be approved. If the work is not satisfactory, District will inform Consultant of the changes or revisions necessary to secure approval. However, none of the proposed changes or revisions or anything else in this Agreement should be construed to relieve the Consultant of professional or legal responsibility for the performance of any services. Corrections to the work as a result of errors or omissions of Consultant will not result in additional costs or expenses to District.

SECTION IV

FEES AND PAYMENT

District will pay for the services described in this Agreement according to the fee schedule set forth in Appendix Two attached hereto and incorporated herein by this reference. Payment for services and any other expenses related to this Agreement must not exceed the limit or limits shown in Appendix Two. Such payment is considered as full compensation for all labor, materials, supplies, equipment, and other items used in carrying out the services described in this Agreement.

Consultant must send all invoices to:

Santa Clara Valley Water District
Attention: Accounts Payable
P.O. Box 20670
San Jose, CA 95160-0670

Consultant must invoice for services on a monthly basis against the schedule of payments outlined in Appendix Two. Each monthly invoice must include a progress statement indicating whether or not the services are on schedule to be completed in accordance with Appendix Three. If completion of the services is not on schedule to be completed per Appendix Three, the progress statement must specify the anticipated length of the delay, the cause of the delay, the measures taken or proposed to mitigate the delay, and the timetable to implement those measures. In addition to ensuring that each invoice is accompanied with a progress statement, Consultant must also ensure that each invoice contains the following information:

(The remainder of page intentionally left blank.)

- Agreement Number
- Full Legal Name of Consultant/Firm
- Payment Remit-to Address
- Invoice Number
- Invoice Date (the date invoice is mailed)
- Beginning and end date for billing period that services were provided

If a progress statement is not attached to the invoice, or if the invoice does not contain the bulleted items above, that invoice will not be processed for payment.

Consultant must maintain records detailing the time worked by each employee and the rate at which the employee's time is being charged. When applicable, invoices must detail the time worked by each class of employee, and the rate at which the class of employee's time is being charged. In order to obtain reimbursement for allowable expenses, the statements must include an itemization of the actual expenses incurred.

SECTION V

TIME OF BEGINNING AND SCHEDULE FOR COMPLETION

Consultant must begin work by the date indicated in the written Notice to Proceed from District. The notice will not be issued until after this Agreement has been approved and authorized by District.

The schedule for completion of the work is detailed in Appendix Three attached hereto and incorporated herein by this reference.

SECTION VI

CHANGES IN WORK

District may order, via a written amendment signed by each parties authorized representative, changes in scope or character of work, either decreasing or increasing the amount of Consultant's services.

This Agreement may be terminated for cause by either party for failure to comply with any terms and conditions of this Agreement, provided, however, that the party in breach has five (5) business days or such period as the parties may otherwise agree in writing to cure such breach following written notification. Additionally, this Agreement may be terminated for convenience by the District upon five (5) business days prior written notice to Consultant. In the event of termination of this Agreement, (i) the District's sole obligation will be to pay Consultant for any authorized work performed through the date of the termination, subject to the not-to-exceed amount for each task; and (ii) Consultant must provide the District with all deliverables and other tangible data created through the date of termination. This paragraph will not be deemed to waive, prejudice, or diminish any rights which the District or Consultant may have at law or in equity for an unlawful termination or other breach of this Agreement by the other party.

SECTION VII

DELAYS AND EXTENSIONS

In the event Consultant is delayed in performance of its services by circumstances beyond its control, District may in its discretion grant a reasonable adjustment in the Schedule of Completion. All claims for adjustments in Schedule of Completion must be submitted to the District representative by Consultant within thirty (30) calendar days of the time of occurrence of circumstances necessitating the adjustment.

SECTION VIII

RESOLUTION OF DISPUTES

In the event of a dispute regarding performance of any of the terms of this Agreement, the parties agree to proceed as follows:

Internal Review: If Consultant wants to dispute an interpretation or requirement, Consultant must invoke this provision and submit the particulars of Consultant's position in writing to the identified District Representative. District Representative must reply in writing to the Consultant. If Consultant is not satisfied by the response of the District Representative, Consultant may appeal to the District's Contract Administrator, or designee. To exercise this administrative remedy the Consultant must submit their written position, the District Representative's response and any other additional reply information the Consultant deems relevant to the decision, to the District's Contract Administrator, or designee, with a copy to the District Representative. The Contract Administrator may at his/her discretion hold a meeting, ask for additional written information, and/or issue a decision based on the information submitted. If after following the Internal Review Process the Consultant is still not satisfied, Consultant may seek external review.

External Review: Consultant, only after proceeding through the Internal Review Process, or District may seek external review where there is a dispute regarding an interpretation or requirement under the Agreement. The intent of this provision is to provide an informal dispute resolution measure which is alternative to a court action. The parties agree that they will submit the controversy to mediation before a mediator. The selection of the mediator and the ground rules for the mediation must be agreed upon by the parties. If agreement cannot be reached to pursue binding mediation or another acceptable alternative dispute resolution procedure, the matter may be submitted to Court for traditional resolution.

SECTION IX

MISCELLANEOUS PROVISIONS

District reserves the right to approve the project manager assigned by Consultant to said work.

Consultant may not assign this Agreement without the express written consent of the District.

Consultant is employed to render a professional service only and any payments made to Consultant are compensation solely for such services as Consultant may render.

Any discretion or right to approve given to any party herein must be exercised in a reasonable manner.

All work performed, and documents produced, pursuant hereto will, upon completion, become the property of District. In the event the work is not completed, the completed portions thereof will become the property of District. However, District agrees that any reuse of any of the materials so furnished by Consultant will be at District's own risk unless prior written approval has been given by Consultant for such reuse. Any and all original correspondence, memoranda, reports, designs, plans, specifications, data compilations, computer programs, or drawings delivered to District by Consultant under terms of this Agreement, in or by any medium (including computer files transmitted electronically or on disk) is deemed to be "work for hire" under the copyright laws of the United States and the copyright will belong to the District. Co-venturers, subcontractors, and vendors to Consultant likewise be bound by these copyright terms. District makes no copyright claim and requires no release for copyrighted material or trademarked names used incidentally by Consultant.

Consultant represents and warrants that neither it or its Parent or Subsidiary Company is currently acting as consultant or expert for any party in support of a claim, potential claim, or active or potential legal action against the District by such party. Consultant agrees that it or its Parent or Subsidiary Company will not so act as such consultant or expert for the duration of this Agreement without first obtaining the written consent of District.

Neither Consultant, nor any parent or subsidiary of Consultant, nor any affiliated entity sharing substantially similar ownership or control with Consultant, are eligible to bid on any contract to be awarded for the construction of any project which may be the subject of services provided under this Agreement.

Consultant hereby acknowledges that District policy prohibits the acceptance by District personnel of gifts of any kind from vendors or contractors. Consultant must honor this policy by not sending or bringing gifts to the District.

Consultant agrees that District, or its agent, has the right to review, obtain, and copy all records pertaining to performance of this Agreement. Consultant agrees to provide District, or its agent, with any relevant information requested and will permit District, or its agent, access to its premises, upon reasonable notice, during normal business hours for the purpose of interviewing employees and inspecting or copying books, records, accounts, computerized records, and other materials that may be relevant to the matter under investigation for the purpose of determining compliance with this Agreement. Consultant further agrees to maintain such records for a period of three (3) years after final payment under this Agreement.

It is understood and agreed that the District does not wish to receive from Consultant any confidential information of Consultant or of any third party. Consultant represents and warrants that any information provided to the District in the course of entering into and performing work under this Agreement is not confidential or proprietary to Consultant or any third party. Consultant must maintain confidential all District information which may be disclosed to Consultant where such information by its nature would construed as being confidential by a reasonable person. Consultant will use its best efforts to prohibit any use or disclosure of the District's confidential information, except as absolutely necessary to perform work under this Agreement.

Consultant must notify the District in writing of each completed deliverable described in Appendix One. Within thirty (30) calendar days of Consultant's notice, the District must either (i) notify Consultant that the District accepts the deliverable, or (ii) notify the Consultant of any deficiencies in such deliverable. If the District advises Consultant of deficiencies in the deliverable, Consultant must correct, at no cost to the District, those deficiencies as soon as

possible and must again notify the District upon completion. The District must then respond to Consultant's notice within thirty (30) calendar days of receipt, and Consultant must correct at no cost to the District any further deficiencies noted. This process will continue until Consultant has corrected all deficiencies.

This Agreement, which includes the terms and conditions, Appendix One, Appendix Two, Appendix Three, and Appendix Four, represents the entire understanding between the parties hereto relating to the services described in this Agreement and supersedes any and all prior proposals or agreements, whether written or oral, that may exist between the parties. This Agreement may not be modified or amended except in writing signed by a duly authorized representative of the party against whom enforcement is sought.

SECTION X

INDEMNIFICATION

Notwithstanding any other provision of this Agreement, Consultant agrees to indemnify, defend and hold harmless the District, its agents, officers, directors, and employees from and against any and all demands, claims, damages, losses and reasonable expenses, including but not limited to liabilities, obligations, claims, costs, reasonable expenses (including without limitation interest, penalties and reasonable attorney's fees), fines, taxes, levies, imposts, assessment, demands, damages or judgments of any kind or nature, whether in law or equity (including without limitation, death or injury to any person, property damage, administrative and judicial orders and consents, or any other loss) to the extent they arise out of, pertain to, or relate to the Consultant's negligence, recklessness, or willful misconduct. The foregoing does not limit any strict liability imposed onto the Consultant by law. The rights, duties, and obligations of the Parties as set forth above in this Section X Indemnification, survive termination, expiration, and suspension of this Agreement.

(The remainder of page intentionally left blank.)

SECTION XI

INSURANCE

Consultant's insurance requirements, if any, are set forth in Appendix Four attached hereto and incorporated herein by this reference.

IN WITNESS WHEREOF, the parties have executed this Agreement the day first hereinabove written.

SANTA CLARA VALLEY WATER DISTRICT
"District"

By: _____
Beau Goldie
Chief Executive Officer

GOVERNMENTAL ADVOCATES, INC.
"Consultant"

By: _____
Cliff Berg
President

Firm Address:

1137 11th Street, Suite 400
Sacramento, CA 95814

"The official signing for Consultant certifies, to the best of his or her knowledge and belief, that neither Consultant nor its principals is presently debarred, suspended, proposed for debarment, declared ineligible, or voluntarily excluded from participation in this transaction by any state department or agency."

NOTE: "No representative may obligate the District to pay fees in excess of the amount in Appendix Two without written authorization from the Board of Directors or appropriate Executive Officer, in accordance with Board Governance Policies."

(The remainder of page intentionally left blank.)

APPENDIX ONE
SCOPE OF SERVICES

This Appendix One describes the tasks to be undertaken by Consultant in providing state lobbying related services to the District.

I. PURPOSE

The purpose of this Agreement is to provide assistance to and representation on behalf of the District, as requested by the District from time to time, including but not limited to supporting District-sponsored legislation; lobbying on legislative and regulatory issues as directed by District staff; and pursuing funding for District projects. Consultant will supplement services provided by the District's staff in Sacramento, California, and will coordinate all work undertaken on behalf of the District through the District's Sacramento office.

II. TASKS

Task 1 – State of California (State) Lobbying Services

Consultant shall supplement the services provided by the District's staff in Sacramento with regards to the District's legislative and administrative objectives in accordance with Tasks 1.1 through 1.4 below.

Task 1.1 – Legislative and Administrative Advocacy

Consultant shall, in consultation with the District's Government Relations Manager, State Government Relations Manager, or their designee, lobby the state government, administrative offices and other organizations as necessary to pursue grants or the District's legislative and administrative objectives. Lobbying is defined as efforts to pursue grant funding and/or efforts to pass, stop, or amend legislation as desired by the District through face-to-face, electronic, and written communications with appropriate persons.

Task 1.2 – Facilitate Policy Briefings

Consultant shall facilitate policy briefings for Board Members and District staff with State Legislators and Administration officials as directed by the District's Government Relations Manager, State Government Relations Manager, or their designee. Consultant will facilitate two lobbying days in Sacramento for District Board Members.

Task 1.3 – Communication and Reporting

Consultant shall provide monthly written reports detailing all activities undertaken on behalf of the District pursuant to this Agreement within 14 business days of the end of each month. Additionally, Consultant shall communicate regularly with the District's Government Relations Manager, State Government Relations Manager, or their designee, by telephone or by e-mail on all pertinent issues. Consultant will be available to attend meetings with District staff as reasonably requested, including at least two meetings in Santa Clara County.

APPENDIX ONE
SCOPE OF SERVICES

Task 1.4 – Coordination of Workload Responsibilities

Consultant shall coordinate all workload responsibilities, direction, strategic planning, and implementation with the District's Government Relations Manager, State Government Relations Manager, or their designee.

Task 2 – Additional Services

Consultant shall provide the additional services detailed in Tasks 2.1 and 2.2 below from September 1, 2015 through December 31, 2015:

Task 2.1 – Review legislative bills and provide analysis of legislation that could affect the District's interests.

Task 2.2 – Attend meetings on behalf of the District where legislative policies are to be discussed or where general District input is sought.

The Consultant shall provide monthly invoices as defined in Appendix Two Fees and Payment. The Consultant shall also provide a monthly written report to the District along with each monthly invoice detailing all activities undertaken on behalf of the District pursuant to this Agreement within fourteen (14) business days of the end of each calendar month.

Deliverables:

1. Monthly report on all Consultant activities pursuant to this Agreement received by District within fourteen (14) business days after the end of each month.

III ADDITIONAL TERMS AND CONDITIONS

A. The Consultant as Independent Contractor

1. The Consultant shall perform all services as an independent contractor and not an agent or employee of District.

2. The expertise and experience of the Consultant are material considerations for District's award and execution of this Agreement. The Consultant shall not assign or transfer any interest in this Agreement nor the performance of any of the Consultant's obligations hereunder, without prior written consent of District, in the form of an amendment, and any attempt to so assign this Agreement, or any rights, duties or obligations arising hereunder, will be void and of no effect. Any assignment of moneys due or to become due in accordance with this Agreement, will be to the extent permitted by law, and will be subject to all proper set-offs, deductions, and withholdings in favor of the District.

B. The Consultant's General Responsibilities

1. Standard of Care

   a. The Consultant and its sub-consultants must perform Services in accordance with those standards of care that are generally recognized as being used by

competent persons in the Consultant's area of specialty in the State of California.

b. The Consultant and its sub-consultants must perform Services in compliance with all applicable written federal, state and local codes, statutes, laws, regulations and ordinances, including, but not limited to, environmental, energy conservation, and disabled access requirements.

2. Unless the requirements for the Scope of Services described in this Agreement are specifically modified in writing, the Consultant must provide its services and deliverables as required.

C. Project Management

1. The Project Manager for the District is Associate Civil Engineer, Scott Wilson.

2. The Project Manager for the Consultant is as indicated in Attachment One of this Scope of Services.

3. The District's Project Manager, or his Deputy Administrative Officer, Rick Callender, are the only persons authorized to accept the Consultant's deliverables on behalf of the District.

D. Confidentiality

Due to the nature of the services the Consultant will provide under the Agreement, there may be disclosure to the Consultant of detailed information about the District's operations, including on a need-to-know basis information which may be protected from public disclosure by confidentiality laws, the attorney-client privilege, and/or other provisions of law which govern the nature and timing of disclosure of public information. As such, the Consultant, its subcontractors, and its subconsultants are required to execute a Non Disclosure Agreement (See Attachment Two). The Consultant understands and acknowledges that District staff members providing information to the Consultant do so with the understanding that such information will be handled appropriately. In the event the Consultant receives such restricted or confidential information, the Consultant will limit access to the information to only those of the Consultant's employees, its subcontractors, and its subconsultants authorized by the District to have the information. The Consultant will notify the District's Project Manager immediately of any request by any third party to have access to the information, and will not disclose the requested information without first receiving express written authorization from the District's Project Manager. The requirements of this section will survive completion of the Agreement.

E. Conflict of Interest

1. The Consultant represents that there exists no actual or potential conflict of interest concerning the services to be performed under this Agreement. The Consultant represents that the Consultant's performance under the Agreement does not require the breach of any agreement or obligation to keep in confidence the proprietary information of another party. The Consultant shall not bring to the

District or use in the performance of the Consultant's duties under the Agreement any materials or documents of another party considered confidential or proprietary unless the Consultant has obtained written authorization from such party, and the informed consent of the District, for the possession and use of such materials.

2. The Consultant also represents and warrants that during the term of the Agreement, the Consultant, the Consultant's parent company, the Consultant's subsidiaries, or any affiliated entity sharing substantially similar ownership of or control with the Consultant shall not act as the Consultant or expert for any party in support of any potential or active claim or legal action against the District by such party.

3. The Consultant, the Consultant's parent company, the Consultant's subsidiaries, or any affiliated entity sharing substantially similar ownership of or control with the Consultant shall not submit a proposal: (i) for any contract to be awarded for the construction or construction management of any project that is related to the services provided under the agreement; or (ii) in response to any request for proposal or District solicitation developed or prepared by or with the assistance of the Consultant, the Consultant's parent company, the Consultant's subsidiaries, or any affiliated entity sharing substantially similar ownership of or control with the Consultant; or (iii) for any single source products/services related to the services under this Agreement, or have a financial stake in any single source products/services resulting from this Agreement.

F. CALIFORNIA FAIR POLITICAL PRACTICES COMMISION STATEMENT OF ECONOMIC INTEREST FORM 700 ("FORM 700"): Upon District's request, Consultant employees, officers, agents, sub-consultants, and subcontractors shall complete, execute, and submit a Form 700 as follows:

1. Consultant employees, officers, agents, sub-consultants, and subcontractors assigned to perform services under this Agreement shall file with the District an Assuming Office Statement. The Assuming Office Statement shall be filed:

    a. within thirty (30) calendar days of the effective date of this Agreement;

    b. within thirty (30) calendar days of Consultant hiring, adding or promoting to a designated filer position employees, officers, agents, sub-consultants, and subcontractors to perform services under this Agreement.

2. Consultant employees, officers, agents, subconsultants, and subcontractors assigned to perform services under this Agreement that filed a an Assuming Office Statement shall file with the District an amendment to their Form 700 anytime there is a change to their disclosure information.

3. Consultant employees, officers, agents, subconsultants, and subcontractors assigned to perform services under this Agreement that filed an Assuming

Office Statement shall file with the District an Annual Statement with the District during the District's annual filing season as determined by the District;

4. Consultant employees, officers, agents, subconsultants, and subcontractors assigned to perform services under this Agreement that filed an Assuming Office Statement shall file with the District a Leaving Office Statement when one of the following occurs:

    a. Upon termination of this Agreement;

        i. within thirty (30) calendar days of Consultant employees, officers, agents, sub-consultants, and subcontractors vacating a designated filing position (i.e. removed from the project, promotion, demotion, transfer to non-designated position, end of employment, or as a result of changes in designated filer positions in the Districts Conflict of Interest Code.)

5. Consultant understands that its employees, officers, agents, sub-consultants, and subcontractors may be disqualified from providing services to the District pursuant to the California Political Reform Act, Gov. Code Sections 81000 et. seq. and Government Code Section 1090. If Consultant's employees, officers, agents, sub-consultants, and subcontractors are disqualified from providing services, on written notice from District's Project Manager, Consultant will have fifteen (15) calendar days to remove that employees, officers, agents, sub-consultants, and subcontractors person from the project and provide a replacement acceptable to the District.

6. Further, the failure of Consultant's employees, officers, agents, sub-consultants, and subcontractors to file an Assuming Office, Amended, or Leaving Office Statement within the time prescribed herein or by the District Clerk of Board is deemed a material breach and may result in termination of the Agreement for cause.

G. Term and Termination

This paragraph G, Term and Termination and the following paragraph H, Consultant's Compensation Upon Termination or Suspension, of Section VI. Additional Terms and Conditions, replaces the second paragraph stated in the Standard Consultant Agreement portion of this Agreement, at Section VI. Changes in the Work.

1. Term & Automatic Termination:
   This Agreement encompasses all services for which the Consultant is responsible to provide within the time limits and not-to-exceed amount set forth herein. The Consultant shall not undertake to provide services where it reasonably appears that the services cannot be provided and expenses cannot be incurred within said total compensation limit.

2. District's Rights

a. Suspension: District may, by written notice to the Consultant, suspend any or all services pursuant to this Agreement. District may subsequently terminate this Agreement for convenience, or decide to proceed. If a decision to proceed is not made within ninety (90) days from the date of the notice of suspension, any decision to proceed must be conditioned upon execution of a new Notice-To-Proceed.

b. Termination for Convenience: District may, by written notice to the Consultant, terminate all or part of this Agreement at any time for District's convenience. Upon receipt of such notice, the Consultant shall immediately cease all work as specified in the notice. If this Agreement is so terminated, the Consultant shall be compensated as set forth in Section H., Consultant's Compensation upon Termination or Suspension, referenced below.

c. Termination for Breach: If The Consultant violates any of the covenants, agreements or stipulations of this Agreement, or if The Consultant fails to fulfill in a timely and proper manner its obligations pursuant to this Agreement, and does not cure such failure or violation within thirty (30) days (or a reasonable extension thereof, if requested, which extension will not be unreasonably withheld) after receipt of written notice from District specifying such failure or violation, District will thereupon have the right to terminate this Agreement by giving written notice to the Consultant of such termination. Such notice will specify the effective date thereof, and the Consultant shall not be entitled to compensation for services or expenses beyond the specified termination date.

d. If, after notice of termination for breach of this Agreement, it is determined that the Consultant did not breach the Agreement, the termination will be deemed to have been effected for District's convenience, and the Consultant shall receive payment that is allowed by this Agreement for a termination for convenience.

e. The rights and remedies provided herein to District are in addition to any other rights and remedies provided by law or this Agreement.

H. The Consultant's Compensation Upon Termination or Suspension

1. In the event of termination of this Agreement, or suspension of services by District, the Consultant shall receive compensation based on satisfactory performance, accepted by the District Project Manager, as follows:
   a. For Direct Labor - The Consultant shall be entitled to receive compensation for all authorized direct labor performed prior to termination pursuant to the provisions of this Agreement and all authorized labor expenses incurred to demobilize from the Project after the date of termination.
   b. For Reimbursable Expenses - The Consultant shall be entitled to receive compensation for all authorized Reimbursable Expenses incurred prior to termination and all authorized expenses incurred to demobilize from the Project after the date of termination.
   c. In no event shall the total compensation paid for any item of service exceed the payment specified for that item of service.

APPENDIX ONE
SCOPE OF SERVICES

I. District Quality Management Environmental System (QEMS) Awareness

As an on-site provider of services that has the potential to result in significant environmental impacts, Consultant is required to review the Contractor QEMS Fact Sheet (Attachment Three), incorporated herein by this reference hereto, with any of the employee(s), sub-contractor(s), and/or sub-consultant(s) ("Staff") performing services on behalf of the District, and make Staff aware of the District's Quality and Environmental Policy and their role and responsibility in achieving conformity with the expectations.

J. Release of Information Prohibited

The Consultant is not permitted to provide any information concerning the Project to the media nor anyone other than authorized District personnel. The Consultant shall not release any information pertinent to the Project for publication, public disclosure, or in any other manner without first obtaining clearance and a release in writing from the District Project Manager. Any media inquiry at any time to the Consultant relating to any matter concerning services provided or requested to be provided under this Agreement will be referred immediately to the District Project Manager. The Consultant shall not communicate with the media regarding any such matter.

K. The District's Contractual Obligations Contingent on Accomplishment of Certain Conditions

The District's obligations under this Agreement, including its payment obligation, are contingent upon accomplishment of the following: (1) execution of the Agreement by Consultant; (2) submission by the Consultant, and acceptance by the District, of evidence of all required insurance coverages and documents; (3) submission by the Consultant, and acceptance by the District, of evidence of all required Form 700 documents, if applicable, within thirty (30) calendar days from execution of this Agreement by the Parties; (4) submission by the Consultant, and acceptance by the District, of evidence of the QEMS Awareness; (5) submission by the Consultant, and acceptance by the District, of all required Non-Disclosure Agreements ("NDA"), if applicable; (6) submission by the Consultant, and acceptance by the District, of a Health and Safety Plan, if applicable; (7) any other requirements that are deemed necessary by the District, and (8) execution of the Agreement by the District. No contract between the Parties is formed until all eight actions items have been accomplished to the satisfaction of the District. Except for item (3), the District Project Manager will not issue a Notice-to-Proceed until all required documents have been submitted and accepted by the District; if applicable.

L. Notices

All notices will be deemed to have been given when made in writing and when delivered or mailed to the representatives of the District and the Consultant at their respective addresses as follows:

APPENDIX ONE
SCOPE OF SERVICES

District:

Santa Clara Valley Water District
5750 Almaden Expressway
San Jose, CA 95118-3638
Attention: Rick Callender, Deputy Administrative Officer, Office of Government Relations

Email: rcallender@valleywater.org

Phone: (408) 630-2017

The Consultant:

Governmental Advocates, Inc.
1127 11th Street, Suite 400
Sacramento, CA 95814
Attention: Monica Miller

Email: mmiller@govadv.com

Phone: (916) 448-8240

M. Good Neighbor
The District always strives to be a good neighbor to the community adjacent to its facility. The Consultant shall ensure that disturbance to neighbors is minimized. The Consultant, its staff, and sub-Consultants will always interact with the members of the public in a polite and professional manner.

N. Scope of Services Attachments
The following listed Attachments referred to herein are incorporated in this Scope of Services as though set forth in full:

Attachment One – Consultant's Key Staff and Subconsultants
Attachment Two – Non Disclosure Agreement

(The remainder of page intentionally left blank.)

ATTACHMENT ONE TO APPENDIX ONE
CONSULTANT'S KEY STAFF
AND SUB-CONSULTANTS

Consultant's Key Staff:

1. Consultant key personnel assigned to the Project are as follows:

Team Member	Title/Role	Consultant/Sub-consultant	Email
Monica Miller	Lobbyist and Project Manager	Consultant	mmiller@govadv.com
Melissa Cortez-Roth	Lobbyist	Consultant	mcortez@govadv.com

2. If necessary and appropriate, Consultant will employ subconsultants it deems appropriate to the complexity and nature of the required Services. All subconsultants must, if their specialty is licensable, be licensed by the State of California to perform their specific Services. Consultant must obtain District's approval of all subconsultants. Upon District's request, Consultant must provide copies of all subconsultant contract agreements. Any delegation or subcontracting of any services by Consultant will not operate to relieve Consultant of its responsibilities under this Agreement.

3. None of the above named Consultant staff or subconsultants will be replaced without the approval of the District's Project Manager. If Consultant's Project Manager or any other designated key staff person or subconsultant fails to perform to the satisfaction of the District, on written notice from District's Project Manager, Consultant will have fifteen (15) calendar days to remove that person from the Project and provide a replacement acceptable to the District.

    A. Consultant will not charge District the time it takes Consultant's replacement personnel to obtain the District specific Project knowledge in the possession of the person or persons being replaced.

    B. The Project team organization chart and delegated responsibilities of each team member will be revised accordingly and submitted to the District for concurrence.

4. The District's Project Manager may approve any revisions to Consultant's key personnel or designated sub-consultant as an administrative modification to this Agreement and will confirm such approval in writing.

(The remainder of page intentionally left blank.)

Santa Clara Valley Water District

ATTACHMENT TWO TO APPENDIX ONE SANTA CLARA VALLEY WATER DISTRICT NON-DISCLOSURE AGREEMENT (NDA)

This Agreement is between the Santa Clara Valley Water District (hereinafter "District"), and ("Company") identified as:

_____
(Company Name)

_____
(Street Address, City, State, Zip, Country)

Now, in consideration of the mutual covenants herein contained, District and Company agree as follows:

1. **Purpose.** This Agreement is to protect District from the misuse or inadvertent disclosure of District confidential and proprietary information that is disclosed in connection with the Company performing work for the District. District confidential information is described as follows:

   _____
   _____
   _____
   _____
   _____
   _____

   The information described above will hereinafter be referred to as "Confidential Information."

2. **Limits on Use of Confidential Information.** Company shall maintain in confidence and will not disclose or disseminate the Confidential Information, whether or not in written form. Company agrees that Company shall treat all Confidential Information with at least the same degree of care as Company accords its own confidential information. Company shall encrypt Confidential Information that is electronic data, and store hard copies in a locked secure location. Company further represents that Company exercises at least reasonable care to protect its own confidential information. If Company is not an individual, Company agrees that Company will only disclose Confidential Information to those of its employees who need to know such information, and certifies that such employees have previously signed a copy of this Agreement.

3. **Acknowledgment of Title.** District, by reason of this Agreement, has not relinquished any right of ownership to the Confidential Information. Nor does District create a non-exclusive right in favor of Company as to the Confidential Information. Company acknowledges that title to Confidential Information delivered to Company under this Agreement shall, at all times remain with District.

4. **Restrictions on Use of Confidential Information.** Company shall not directly or indirectly disclose, display, provide, transfer or otherwise make available all or any part of the Confidential Information to any person (including its consultants and independent contractors), unless Company has received prior written permission from the District and such person previously signed a copy of this Agreement. Company shall not make copies of the Confidential Information or any portion thereof. Company acknowledges that Confidential Information may be utilized only in accordance with providing services to the District.

5. **Return.** Company agrees to return to District all Confidential Information. Company shall return to District all Confidential Information and copies thereof of documents, computer media and

other items of District at such time as further retention is no longer necessary for future performance in connection with performing work for the District or upon 30 days written notice from District. In addition, Company agrees to erase, delete or destroy any notes, documents, magnetic media, or other computer storage, including system backups that contain any Confidential Information copies or derived from the Confidential Information. Company acknowledges that District, because of the unique nature of the Confidential Information, would suffer irreparable harm in the event that Company breaches its obligation under this Agreement in that monetary damages would be inadequate to compensate District for such breach. Company agrees that in such circumstances, District shall be entitled, in addition to monetary relief, to injunctive relief as may be necessary to restrain any continuing or further breach by Company, without showing or approving any actual damages sustained by District.

6. **Notice of Disclosure**. Company shall immediately notify District of any unauthorized disclosure, loss of Confidential Information and shall further take all reasonable steps to retrieve and prevent further unauthorized disclosure of such proprietary information. Such disclosure of a loss shall in no way limit District's remedies under this Agreement including, but not limited to, immediate injunctive relief. Notwithstanding the foregoing, nothing herein shall restrict the right of Company to disclose such Confidential Information that is disclosed pursuant to a judicial order, but only to the extent so ordered, provided, however, that Company receiving such order shall notify District of such order in sufficient time to permit District to intervene in response to such order and provided that the confidential or proprietary markings remain on the information disclosed.

7. **General**

7.1 **Entire Agreement**. This Agreement sets forth the entire understanding and agreement between the parties hereto as to the subject matter of this Agreement and supersedes any previous communications, negotiations, warranties, representations, and prior non-disclosure agreements, either oral or written, with respect to obligations of confidentiality of the subject matter hereof, and no addition or modification of this Agreement shall be binding on either party hereto unless reduced to writing and duly executed by each of the parties hereto.

7.2 **Applicable Law/Disputes**. This Agreement is governed by the laws of the State of California. In any dispute arising out of this Agreement, the parties hereby consent to personal and exclusive jurisdiction and venue in the State and Federal Courts in Santa Clara County, California.

7.3 **Survival of Company's Obligations**. All obligations of Company under this Agreement shall survive the return of the Confidential Information and termination of this Agreement.

7.4 **Authority**. The undersigned individuals represent that they have the authority to enter into and bind the parties to this Agreement.

GOVERNMENTAL ADVOCATES, INC.:	**SANTA CLARA VALLEY WATER DISTRICT:**
By: _____ (Signature)	**By:** _____ (Signature)
Name: Cliff Berg (Printed)	**Name:** _____ (Printed)
Title: President	**Title:** _____
Date: 8/24/15	**Date:** _____

PERSONAL NDA
(Attachment One to Santa Clara Valley Water District NDA)

I acknowledge that the Santa Clara Valley Water District ("District") will make available to me from time to time certain information that is highly confidential to the District. I acknowledge that such information is extremely sensitive and agree that I will not disclose all or any part of this confidential information to any person, firm, corporation, association, or partnership without the express written permission of the District. This confidential information includes, but is not limited to, the following kinds of information: citizen complaints, utility records, plans, security data, vulnerability assessments, draft documents, network data, control systems data, security protocols, personnel data, computer programs, remote application access, computer information licensed to the District, work product of the District's employees and agents, and other non-public information.

I will at all times hold all of the District's confidential information in trust and in the strictest confidence. This obligation shall continue after my employment at the District has ended. I will prevent the impermissible release of the District's confidential information. I will neither retain nor incorporate any of the confidential information into any database or any medium other than as may be required for the District's exclusive benefit. I will not duplicate or disclose or otherwise reveal such confidential information in any manner inconsistent with this NDA.

In addition, I will not perform any illegal acts with respect to the confidential information, and I will not share the password or account access provided exclusively to me. When leaving a workstation unattended, or out of sight, I will save my work and log off or lock the workstation to prevent unauthorized access. I will make no attempt to circumvent access codes or information protection schemes or uncover security loopholes or attempt to break authentication procedures or encryption protocols. I will make no attempts to increase the level of access to which I have been authorized. I will not attempt to use or obtain access codes in an unauthorized manner or from another user. I will not allow non-employees to access District computer systems.

I acknowledge that my faithful compliance with this NDA is necessary to protect the District and that any action on my part that is inconsistent with this NDA will cause the District irreparable and continuing harm. Therefore, if anything I do is inconsistent with this NDA, I agree that the District may obtain a court order to stop my inconsistent actions and to otherwise prevent any inconsistent actions, without the District having to post any bond or security for such order. I further agree that the District may pursue other remedies available to it, all of which are nonexclusive and cumulative.

PLEASE COMPLETE THE FOLLOWING SECTION (PLEASE PRINT):

Full Name:	
Company Name:	
Phone No.:	Fax No.:
Email Address:	
What department(s) do you work with within the District?	
Signature:	Date:

APPENDIX TWO
FEES AND PAYMENTS

I. GENERAL

Payment for all services performed by Consultant to the satisfaction of the District as listed in Appendix One—Scope of Services for this Agreement will be based on the Total Fixed Fee Payment Schedule stated in this Appendix Two for the completion of the associated tasks. The District will make payments to the Consultant according to the terms provided for in this Appendix Two. Payments made by the District to the Consultant for services rendered will be considered full compensation for all personnel, overhead, materials, supplies, profits, subconsultant(s) if any, equipment, travel expenses, per diem expenses incurred by the Consultant to complete the services.

II. TOTAL AUTHORIZED FUNDING

Total payment for services performed, as defined in Appendix One - Scope of Services, will not exceed a total amount of **$119,200** during the term of this Agreement. Under no conditions will the total compensation to the Consultant exceed this NTE amount without prior written approval in the form of an amendment to this Agreement executed by the District's Board of Directors ("Board"), or Chief Executive Officer as authorized by the Board. The Consultant guarantees that it will complete the contracted Scope of Services for the Total **$119,200** NTE Amount.

III. FIXED FEES AND PAYMENT SCHEDULES

The Fixed Fees rates listed in the tables below will remain in effect for the term specified below.

1. MONTHLY FIXED FEE PAYMENT SCHEDULE FROM SEPTEMBER 1, 2015 – DECEMBER 31, 2015

Task	Description	Monthly Fixed Fee
1	State Lobbying Services	$9,100 per month for Task 1
2	Additional Services	$2,500 per month for Task 2
	Total Monthly Fixed Fee Amount	$11,600 per month

2. MONTHLY FIXED FEE PAYMENT SCHEDULE FROM JANUARY 1, 2016 – AUGUST 31, 2016

Task	Description	Monthly Fixed Fee
1	State Lobbying Services	$9,100 per month for Task 1
	Total Monthly Fixed Fee Amount	$9,100 per month

APPENDIX TWO
FEES AND PAYMENTS

IV. TERMS AND CONDITIONS

Payments for work completed, as defined in Appendix One - Scope of Services, will be based on the following terms:

1. District will pay for services provided by the Consultant in accordance to the Fixed Fees and Payment Schedule of the monthly fixed fees included in Section III of this Appendix Two.

2. Monthly invoices will be prepared in accordance with the terms of this Appendix Two and the Standard Consultant Agreement Section IV, Fees and Payments and represent work performed and reimbursable costs incurred during the identified billing period and will be consistent with Appendix One and include services outlined in Tasks One and Two and must reflect actual fixed fees incorporated in this Appendix Two. Before submitting an invoice, a draft invoice and monthly progress report (in Adobe PDF format) will be provided by the Consultant for preliminary review by the District Project Manager. Upon preliminary approval by the District, the Consultant will mail the complete signed and dated hardcopy invoice, including all supporting documentation. District review of the draft invoice does not represent final approval of the hardcopy invoice.

3. District's Project Manager will review invoice within five (5) working days of receipt, address any questions with Consultant's Project Manager, and approve the undisputed amount of the invoice within ten (10) working days of receipt of the invoice. District will pay undisputed invoices within thirty (30) calendar days from date invoice is approved by District's Project Manager.

4. Small Business Enterprise (SBE) Participation

5. This Agreement provides for the Consultant to include California Department of General Services certified Small/Micro Businesses in the performance of the services, estimated to be **100%** or more of the Total Not to Exceed Amount stated in this Appendix Two and Consultant agrees to use its best efforts to meet this goal.

(The remainder of page intentionally left blank.)

APPENDIX THREE
SCHEDULE OF COMPLETION

A. This Agreement commences on the date specified in the introductory paragraph of the Standard Consultant Agreement portion of this Agreement. This Agreement expires **August 31, 2016** unless, prior to its expiration, its term is modified by a written amendment hereto, signed by both Parties. The District may extend the Agreement for two one-year periods upon written amendment executed by both Parties.

B. Consultant will coordinate work with the District to provide the timeline of all tasks and subtasks including meetings with District staff as reasonably requested as well as meetings in Santa Clara County. Task and deliverable schedules will only be changed with advance written approval by the District.

C. Consultant will commence Tasks listed in Appendix One of this Agreement upon receipt of the Notice-to-Proceed (NTP) issued by the District.

D. Project Delays—The Consultant will make all reasonable efforts to comply with the Project Schedule as shown here in Appendix Three. In the event the Project Schedule will be delayed, Consultant will notify the District as soon as possible, providing the reason why, the length of the delay, and a description of the actions being taken to address the delay. In the event Consultant is delayed in performance of its services by circumstances beyond its control, District may in its discretion grant a reasonable adjustment in the Project Schedule. This language will prevail should any conflict or discrepancy occur between this provision and Section VII. Delays and Extensions.

E. The District's Project Manager and Consultant may agree to modify the schedule specified for Consultant's performance as an administrative modification to the Agreement and will confirm such approval in writing.

F. Project Schedule - The Consultant will complete the Services as listed in Appendix One of this Agreement as per the schedule provided in the table below:

Task #	Task Description	Start Date	Completion Date
1	State Lobbying Services	09/01/15	08/31/16
2	Additional Services	09/01/15	12/31/15

(The remainder of page intentionally left blank.)

APPENDIX FOUR
INSURANCE REQUIREMENTS

Please refer to the insurance requirements listed below.

Without limiting the Consultant's indemnification of, or liability to, the Santa Clara Valley Water District ("District"), the Consultant must provide and maintain at its own expense, during the term of this Agreement, or as may be further required herein, the following insurance coverages and provisions:

Consultant must provide its insurance broker(s)/agent(s) with a copy of these requirements and warrants that these requirements have been reviewed by Consultant's insurance agent(s) and/or broker(s), who have been instructed by Consultant to procure the insurance coverage required herein. All Certificates of Insurance complete with copies of all required endorsements must be sent to: .

In addition to certificates, Consultant must furnish District with copies of original endorsements affecting coverage required by this Appendix. The certificates and endorsements are to be signed by a person authorized by that insurer to bind coverage on its behalf. **All endorsements and certificates are to be received and approved by District before work commences.** In the event of a claim or dispute, District has the right to require Consultant's insurer to provide complete, certified copies of all required pertinent insurance policies, including endorsements affecting the coverage required by this Appendix.

Consultant must, at its sole cost and expense, procure and maintain during the entire period of this Agreement the following insurance coverage(s).

Required Coverages:

1. **Commercial General/Business Liability Insurance** with coverage as indicated:

   $1,000,000 per occurrence/**$1,000,000** aggregate limits for bodily injury and property damage

   General Liability insurance must include:

   a. Coverage at least as broad as found in standard ISO form CG 00 01.

   b. Contractual Liability expressly including liability assumed under this contract.

   c. If Consultant must be working within fifty (50) feet of a railroad or light rail operation, any exclusion as to performance of operations within the vicinity of any railroad bridge, trestle, track, roadbed, tunnel, overpass, underpass, or crossway must be deleted, or a railroad protective policy in the above amounts provided.

   d. Severability of Interest

   e. Broad Form Property Damage liability

   f. If the standard ISO Form wording for "OTHER INSURANCE," or other comparable wording, is not contained in Consultant's liability insurance policy, an endorsement must be provided that said insurance will be primary insurance and any insurance or self-insurance maintained by District, its Directors, officers,

employees, agents or volunteers must be in excess of Consultant's insurance and must not contribute to it.

2. **Business Auto Liability Insurance** with coverage as indicated:

   $1,000,000 combined single limit for bodily injury and property damage per occurrence, covering all owned, non-owned and hired vehicles.

3. **Professional/Errors and Omissions Liability** with coverage as indicated:

   $1,000,000 per claim/ **$1,000,000** aggregate

   Professional/Errors and Omission Liability appropriate to the Consultant's profession, and must include:

   a. If coverage contains a deductible, or self-insured retention, it shall not be greater than one hundred thousand dollars ($100,000) per occurrence/event.

   b. Coverage shall include contractual liability

   c. If coverage is claims-made:

      a. Certificate of Insurance shall clearly state that the coverage is claims-made

      b. Policy retroactive date must coincide with or precede the Consultant's start of work (including subsequent policies purchased as renewals or replacements).

      c. Policy must allow for reporting of circumstances or incidents that might give rise to future claims.

      d. Insurance must be maintained and evidence of insurance must be provided for at least three (3) years after completion of the contract of work.

4. **Workers' Compensation and Employer's Liability Insurance**

   Statutory California Workers' Compensation coverage covering all work to be performed for the District.

   Employer Liability coverage for not less than $1,000,000 per occurrence.

General Requirements:

With respect to all coverages noted above, the following additional requirements apply:

1. **Additional Insured Endorsement(s)** Consultant must provide an additional insured endorsement for Commercial General/Business Liability and Business Automobile liability coverage naming the **Santa Clara Valley Water District, its Directors, officers,**

employees, and agents, individually and collectively, as additional insureds, and must provide coverage for acts, omissions, etc. arising out of the named insureds' activities and work. Other public entities may also be added to the additional insured endorsement as applicable and the Consultant will be notified of such requirement(s) by the District.

(**NOTE**: Additional insured language on the Certificate of Insurance is **NOT** acceptable without a separate endorsement such as Form CG 20 10, CG 2033, CG 2037.
Note: Editions dated 07/04 are not acceptable)

2. **Primacy Clause**: Consultant's insurance must be primary with respect to any other insurance which may be carried by the District, its officer, agents and employees, and the District's coverage must not be called upon to contribute or share in the loss.

3. **Cancellation Clause Revision**: The Certificate of Insurance **MUST** provide **30-days notice of cancellation, (10 days notice for non-payment of premium). NOTE: The standard wording in the ISO Certificate of Insurance is <u>not</u> acceptable**. The following words must be crossed out or deleted from the standard cancellation clause: "...endeavor to..." AND "...but failure to mail such notice must impose no obligation or liability of any kind upon the company, its agents or representatives."

4. **Acceptability of Insurers**: All coverages must be issued by companies admitted to conduct business in the State of California, which hold a current policy holder's alphabetic and financial size category rating of not less than A- V, according to the current Best's Key Rating Guide or a company of equal financial stability that is approved by the District's Risk Management Administrator.

5. **Self-Insured Retentions or Deductibles**: Any deductibles or self-insured retentions must be declared to and approved by the District. At the option of the District, either: the insurer shall reduce or eliminate such deductibles or self-insured retentions as respects the District, its officers, officials, employees and volunteers; or the Consultant shall provide a financial guarantee satisfactory to the Entity guaranteeing payment of losses and related investigations, claim administration, and defense expenses.

6. **Subconsultants**: Should any of the work under this Agreement be sublet, the Consultant must require each of its subconsultants of any tier to carry the aforementioned coverages, or Consultants may insure subconsultants under its own policies.

7. **Amount of Liability not Limited to Amount of Insurance**: The insurance procured by Consultant for the benefit of the District must not be deemed to release or limit any liability of Consultant. Damages recoverable by the District for any liability of Consultant must, in any event, not be limited by the amount of the required insurance coverage.

8. **Coverage to be Occurrence Based**: With the exception of the Professional Liability/Errors and Omissions coverage mentioned above, all coverage must be occurrence-based coverage. Claims-made coverage is not allowed.

9. **Waiver of Subrogation**: Consultant agrees on to waive subrogation against the District to the extent any loss suffered by Consultant is covered by any Commercial General Liability policy, Automobile policy, Workers' Compensation policy, or Professional policy

described in **Required Coverages** above. Consultant agrees to advise its broker/agent/insurer about this provision and obtain any endorsements, if needed, necessary to ensure the insurer agrees.

10. **Non-compliance**: The District reserves the right to withhold payments to the Consultant in the event of material noncompliance with the insurance requirements outlined above.

11. **Please mail the certificates and endorsements to**:

    Santa Clara Valley Water District
    5750 Almaden Expressway
    San Jose, CA 95118
    Attn: Scott Wilson

IMPORTANT: On the certificate of insurance, please note: Scott Wilson, CAS File No. 4637

If your insurance broker has any questions please advise him/her to call Mr. David Cahen, District Risk Management Administrator at (408) 630-2213.

(The remainder of page intentionally left blank.)

SCVWD ENACTED COPY
Contract Administration Unit
AGMT: A3896F FILE: 4637

AMENDMENT NO. 1 TO STANDARD CONSULTANT AGREEMENT A3896F BETWEEN SANTA CLARA VALLEY WATER DISTRICT AND GOVERNMENTAL ADVOCATES

This Amendment No. 1, retroactively effective on September 1, 2016, amends the terms and conditions of Standard Consultant Agreement No. A3896F (Agreement) dated September 1, 2015 between the SANTA CLARA VALLEY WATER DISTRICT ("District") and GOVERNMENTAL ADVOCATES ("Consultant") collectively, the "Parties."

RECITALS

WHEREAS, Consultant is currently providing State Lobbying; and

WHEREAS, the Agreement expires on August 31, 2016; and

WHEREAS, the Parties desire to extend the term of the Agreement through August 31, 2017.

NOW, THEREFORE, in consideration for the mutual promises and agreements contained herein and notwithstanding anything to the contrary in the Agreement, Consultant and the District hereby agree as follows:

1. In the Agreement, Appendix Two, Fees and Payments, Section II, Total Authorized Funding Under the Agreement, replace the paragraph in its entirety with the following:

   "Total payment for services performed, as defined in Appendix One - Scope of Services, will not exceed a total amount of **$224,800** during the term of this Agreement. Under no conditions will the total compensation to the Consultant exceed this NTE amount without prior written approval in the form of an amendment to this Agreement executed by the District's Board of Directors ("Board"), or Chief Executive Officer as authorized by the Board. The Consultant guarantees that it will complete the contracted Scope of Services for the **$224,800** NTE Amount."

2. In the Agreement, Appendix Two, Fees and Payments, Section III, Fixed Fees and Payment Schedules, add the following payment schedule as subsection 3:

   MONTHLY FIXED FEE PAYMENT SCHEDULE FROM SEPTEMBER 1, 2016 – AUGUST 31, 2017"

Task	Description	Monthly Fixed Fee
1	State Lobbying Services	$8,800 per month for Task 1
	Total Monthly Fixed Fee Amount	$8,800 per month

AMENDMENT NO. 1 TO AGREEMENT NO. A3896F

3. In the Agreement, Appendix Three, Schedule of Completion, Section A, replace the paragraph in its entirety with the following:

   This Agreement commences on the date specified in the introductory paragraph of the Standard Consultant Agreement portion of this Agreement. This Agreement expires **August 31, 2017** unless, prior to its expiration, its term is modified by a written amendment hereto, signed by both Parties. The District may extend the Agreement for two one-year periods upon written amendment executed by both Parties.

4. In the Agreement, Appendix Three, Schedule of Completion, Section F, delete the Project Schedule table in its entirety with the following:

Task #	Task Description	Start Date	Completion Date
1	State Lobbying Services	09/01/15	08/31/17
2	Additional Services	09/01/15	12/31/15

5. In the Agreement, delete Section X in its entirety and replace with the following:

   "Notwithstanding any other provision of this Agreement, Consultant agrees to indemnify, defend and hold harmless the District, its agents, officers, directors, and employees from and against any and all demands, claims, damages, losses and reasonable expenses, including but not limited to liabilities, obligations, claims, costs, reasonable expenses (including without limitation interest, penalties and reasonable attorney's fees), fines, taxes, levies, imposts, assessment, demands, damages or judgments of any kind or nature, whether in law or equity (including without limitation, death or injury to any person, property damage, administrative and judicial orders and consents, or any other loss) to the extent they arise out of, pertain to, or relate to the Consultant's negligence, recklessness, or willful misconduct. The foregoing does not limit any strict liability imposed onto the Consultant by law. The rights, duties, and obligations of the Parties as set forth above in this Section X survive termination, expiration, and suspension of this Agreement."

6. In the Agreement, Section II, delete paragraphs eight and nine and replace with the following paragraphs eight, nine and ten:

   The Santa Clara Valley Water District is an equal opportunity employer and requires its consultants to have and adhere to a policy of equal opportunity and non-discrimination. In the performance of the Agreement, the Consultant will comply with all applicable federal, state, local laws and regulations, and will not discriminate against any subcontractor, employee, or applicant for employment, in the recruitment, hiring, employment, utilization, promotion, classification or reclassification, transfer, recruitment advertising, evaluation, treatment, demotion, layoff, termination, rates of pay or other forms of compensation, and selection for professional development training (including apprenticeship), or against any other person, on the basis of sex (which includes pregnancy, childbirth, breastfeeding and medical conditions related to pregnancy, childbirth or breastfeeding), race, religion, color, national origin (including language use restrictions), ancestry, religious creed (including religious dress and grooming practices, political affiliation, disability (mental and physical, including HIV or AIDS), medical

condition (cancer and genetic characteristics), genetic information, marital status, parental status, gender, age (40 and over), pregnancy, military and veteran status, sexual orientation, gender identity and gender expression, the exercise of family and medical care leave, the exercise of pregnancy disability leave, or the request, exercise, or need for reasonable accommodation.

The Consultant's policy must conform with applicable state and federal guidelines including the Federal Equal Opportunity Clause, "Section 60-1.4 of Title 41, Part 60 of the Code of Federal Regulations," Title VII of the Civil Rights Act of 1964 as amended; the American's with Disabilities Act of 1990; the Rehabilitation Act of 1973 (Sections 503 and 504); the Age Discrimination Act of 1975 (42 U.S.C. sec. 6101 et seq.); California Fair Employment and Housing Act (Government Code Section 12900 et. seq.); California Labor Code Sections 1101 and 1102.

Consultant must designate a specific position within its organization to be responsible for assuring nondiscrimination and non-harassment as provided in this Agreement. Consultant must investigate all complaints directed to it by District. District will refer complaints in writing and Consultant will advise District in writing when such investigations are concluded. The scope of such investigations must include all appropriate officers, employees, and agents of the Consultant, as well as all subcontractors, subconsultants, and material suppliers of the Consultant. In cases where such investigation results in a finding of discrimination, harassment, or hostile work environment, Consultant must take prompt, effective disciplinary action against the offender.

7. All other terms and conditions of Agreement No. A3896F, not amended as stated herein, remain in full force and effect.

IN WITNESS WHEREOF, the parties have executed this Amendment No. 1 to Agreement A3896F and agree to its terms through the signatures of their duly authorized representatives.

SANTA CLARA VALLEY WATER DISTRICT		**GOVERNMENTAL ADVOCATES**	
Signature:		Signature:	
Name:	Norma Camacho	Name:	Cliff Berg
Title:	Interim Chief Executive Officer	Title:	President
Date:	9/28/16	Date:	9/14/16

(REMAINDER OF PAGE INTENTIONALLY LEFT BLANK)

Santa Clara Valley Water District

FC 1699 (03-24-16)

Project Manager: Antonio Alfaro
Extension: 10328
Date: 9/15/16

AGREEMENT APPROVAL REQUEST

CAS FILE NO.: 4637

CONTRACT NAME:

State Lobbying Services: 2015

RECOMMENDATION:

Approve and execute the attached Amendment No. 1 (Amendment) to the Standard Consultant Agreement No. A3896F between the Santa Clara Valley Water District and Governmental Advocates (Consultant). Staff is requesting that the CEO approve this amendment no.1, extending the term of the agreement from its current expiration of date of August 31, 2016 to August 31, 2017.

EL-5 COMPLIANCE:

EL 5.1.2 provides for the Board Appointed Officer (BAO) to approve Consultant Services Contracts less than $225,000. The recommended action is in compliance with EL 5.1.2.

SUMMARY:

The District desires to extend the duration of the original agreement by 12 months, ending on August 31, 2017. Approval of the recommended action will allow the Consultant to continue providing the District's Sacramento Legislative Office with the state lobbying services defined in Appendix One, Scope of Services.

FINANCIAL IMPACT:

This Amendment increases the total amount of the Agreement from $105,600 to $224,800 which still falls within the BAO's authorized approval level. This is the first amendment issued and there are adequate funds available in the project budget to cover the increased amount.

ATTACHMENTS:

1. CAS Summary Approval History Sheet
2. Two copies of Amendment No. 1 to Agreement A3896F (for signatures)

APPROVALS:

Rick Callender, Deputy Administrative Officer
Office of Government Relations

9/16/16
Date

Norma Camacho, Interim CEO
Office of the Chief Executive Officer

9/28/16
Date

5750 Almaden Expressway, San Jose, CA 95118-3614 | (408) 265-2600 | www.valleywater.org

Santa Clara Valley Water District

September 29, 2016

Cliff Berg
Governmental Advocates
1127 11th Street, Suite 400
Sacramento CA, 95814

Subject: Amendment No. 1 to Agreement A3896F between the Santa Clara Valley Water District and Governmental Advocates

Dear Mr. Berg,

Enclosed is an enacted copy of **Amendment No. 1 to Agreement A3896F** which was executed by the Santa Clara Valley Water District on September 28, 2016. Please retain the enclosed copy for your records and reference any future correspondence related to this contract with Agreement A3896F.

If you have any questions regarding this Agreement, please contact Project Manager Antonio Alfaro at (916) 494-2891 or AAlfaro@valleywater.org.

Sincerely,

Roderick S. Jefferson Sr.
Supervising Program Administrator
Consultant Contracts Services

Enc.: Agreement A3896F

THIS PAGE INTENTIONALLY LEFT BLANK

File No.: 17-0554

Agenda Date: 8/8/2017
Item No.: *3.2.

BOARD AGENDA MEMORANDUM

SUBJECT:
Adopt Plans and Specifications and Authorize Advertisement for Bids for the Almaden Valley Pipeline Inspection and Rehabilitation Project, Project No. 95084002 Contract No. C0631 (City of San Jose, Town of Los Gatos, and Unincorporated Santa Clara County), (Districts 4 and 7).

RECOMMENDATION:

A. Adopt the plans and specifications and authorize advertisement for bids for inspection and rehabilitation of the Almaden Valley Pipeline per the Notice to Bidders;

B. Authorize the Designated Engineer to issue addenda, as necessary, during the bidding process; and

C. Find that the Almaden Valley Pipeline Inspection and Rehabilitation Project is substantially complex and, therefore, requires a construction contract retention of 10 percent.

SUMMARY:

The Almaden Valley Pipeline Inspection and Rehabilitation Project (Project) is the first project to be completed under the District's 10-year Pipeline Inspection and Rehabilitation Program. The purpose of this program is to maintain the integrity of the approximately 140 miles of large diameter raw and treated water transmission pipelines, extend their useful life, and address infrastructure reliability concerns. Approving the recommended actions will allow staff to proceed with advertisement for construction bids for the Project.

Project Background

The proposed Project involves inspection, maintenance, and rehabilitative work on the Almaden Valley Pipeline (AVP) as part of the Pipeline Maintenance Program (PMP).

The AVP consists of approximately 12 miles of 72-inch to 78-inch diameter Prestressed Concrete Cylinder Pipe (PCCP) and welded steel pipe (WSP). The pipeline was constructed in two major

segments; AVP Unit 1 was constructed in the 1960's, and AVP Unit 2 was constructed in the 1980's. The AVP is used to supply raw water to the District's water treatment plants and groundwater recharge facilities. In 2007 and 2008, staff completed inspection and rehabilitation projects on the AVP. In 2011, staff repaired a damaged section of PCCP that was identified during an inspection of the AVP. The damage to the pipe section was caused by increased stress from a newly-constructed bridge abutment.

The proposed work for this Project consists of the following:

1. Dewatering the pipeline and completing an internal visual inspection;
2. Performing an electromagnetic inspection of the pipeline to identify distressed pipe sections;
3. Replacing and rehabilitating in-vault pipeline appurtenances and assembly components at up to ninety-five (95) sites;
4. Installing an acoustic fiber optic cable monitoring system to monitor wire breaks on PCCP;
5. Performing internal pipeline repair work, including the installation of Carbon Fiber Structural Reinforcement for PCCP, as needed, on damaged and/or deteriorated pipeline sections identified during the internal pipeline inspection.

Construction of the proposed Project is scheduled to begin in October 2017 and end in March 2018.

The shutdown of the AVP will also shut down the Santa Teresa Water Treatment Plant (STWTP). To limit the duration of the STWTP shutdown, the Project work will be completed in two phases. Phase 1 will include inspection and rehabilitation of the AVP from the Coleman Line Valve to Calero Reservoir and is scheduled to be completed in January 2018. Completion of this phase of work will allow raw water supplies to resume through this portion of the AVP and allow the STWTP to be returned to service. Phase 2 of the project will include inspection and rehabilitation of the AVP from the Vasona Pumping Plant to the Coleman Line Valve, and will be completed by the end of March 2018.

Coordination and planning efforts with local, State and Federal water supply and regulatory agencies regarding the pipeline shutdown will be completed prior to Project award. Contingency planning for potential conflicts with concurrent District operations has been evaluated and the ability to move the proposed Project construction dates or cancel contract award is addressed in the Project specifications.

Construction Contract Retention

Public Contract Code (PCC) Section 7201 has been amended to limit retention amounts for public works construction contracts to five percent (5%) of the total contract price. PCC section 7201(b)(4) provides that retention proceeds on a project may exceed 5% where the Board makes a finding that the proposed project is "substantially complex" and, therefore, requires a retention amount greater than 5%.

To comply with the PCC in regard to increasing the retention to 10%, staff recommends the Board find that the Project is substantially complex based on the precision required to perform this critical work and shutdown schedule constraints necessary to minimize unplanned disruption in the delivery of raw water to Santa Clara County.

Previous Board Actions Related to this Project:

Attachment 2 provides a summary of Board actions related to the Project Delivery Process for the Project.

On November 13, 2007, the Board certified the Pipeline Maintenance Program Environmental Impact Report (PMP EIR) and adopted the Mitigation Monitoring Plan.

On April 13, 2010, the Board held a public hearing and adopted Resolution 10-29 approving the PMP Engineer's Report and approving the PMP.

Next Steps

The District has applied for and anticipates approval of the 1602 Lake and Streambed Alteration Agreement (LSAA) from the California Department of Fish and Wildlife (CDFW) prior to contract award. District staff received a Complete Notification from CDFW dated July 21, 2017 and therefore CDFW has until September 19, 2017 to issue a draft agreement or inform District staff that an agreement is not required.

If the Board approves the recommendations, staff will proceed to advertise the Project for construction bids. Staff anticipates recommending the Board to award a construction contract on September 26, 2017.

FINANCIAL IMPACT:
The total cost of the Project is estimated at $12 million and is included in the FY 18-22 CIP as part of the 10-year Pipeline Inspection and Rehabilitation Program with a total cost of $97 million. The funds needed for the planned Project work for this fiscal year are included in the Fiscal Year 2018 Board-adopted budget.

The estimated cost of the construction contract for the Project is in the range of $3.0 to $3.6 million. Additional budgeted funds are for other contracted and non-contracted Project activities such as: confined space support, high-angle rope access support, electromagnetic inspection, acoustic fiber optic monitoring system installation, project planning and design, project administration, biological and regulatory oversight and monitoring, parts and materials procurement, and facility isolation and restoration.

Table 1 provides a breakdown of the estimated costs of all Project activities.

Table 1 - Estimated Project Costs for Almaden Valley Pipeline Inspection and Rehabilitation Project

Project Activity	Estimated Cost
Planning/Design Phase	$500,000
Pipe Materials/Monitoring System	$3,700,000
Construction Phase	$7,600,000
TOTAL	**$11,800,000**

CEQA:

On November 13, 2007, the Board certified the Pipeline Maintenance Program Environmental Impact Report (PMP EIR) [Resolution No. 07-71]. The PMP provides for the maintenance of the District's 14 raw water pipelines and 9 treated water pipelines. Potential impacts related to all components of the Project have been evaluated and mitigation measures are specified in the PMP EIR. During Project implementation, the District and the contractor will comply with all BMPs and mitigation measures per the PMP EIR.

ATTACHMENTS:
Attachment 1: Notice to Bidders
Attachment 2: Project Delivery Process Chart
Attachment 3: Map
*Supplemental Agenda Memo
*Supplemental Attachment 1

UNCLASSIFIED MANAGER:

Christopher Hakes, 408-630-3796

ALMADEN VALLEY PIPELINE INSPECTION AND REHABILITATION PROJECT

Project No. 95084002

Contract No. C0631

1. **Notice**. Notice is hereby given that sealed Bids will be accepted by the Construction Program of the Santa Clara Valley Water District, Room B108, of the District's Administration Building, 5750 Almaden Expressway, San Jose, California 95118 up to 2 p.m. on September 13, 2017, for furnishing all material and performing all work necessary for construction of the Almaden Valley Pipeline Inspection and Rehabilitation Project, in Santa Clara County, CA.

Additional information and Instructions to Bidders is posted on the District's Construction Administration webpage:
http://www.valleywater.org/Programs/Construction.aspx

2. **California State Department of Industrial Relations Contractor and SubContractor Registration Requirements**.

(See Standard Provisions, Prevailing Wages, Article 4.04. for the full text.)

California Labor Code section 1771.1 requires:

A contractor or subcontractor shall not be qualified to bid on, be listed in a bid proposal, subject to the requirements of Section 4104 of the Public Contract Code, or engage in the performance of any contract for public work, unless currently registered and qualified to perform public work pursuant to Section 1725.5 of the California Labor Code.

An inadvertent error in listing a subcontractor who is not registered pursuant to Section 1725.5 in a bid proposal shall not be grounds for filing a bid protest or grounds for considering the bid nonresponsive, provided that any of the following apply:

(1) The subcontractor is registered prior to the bid opening.

(2) Within 24 hours after the bid opening, the subcontractor is registered and has paid the penalty registration fee.

(3) The subcontractor is replaced by another registered subcontractor pursuant to Section 4107 of the Public Contract Code.

3. **Summary of Work**

A. **Project Description**. The project scope includes the following:

The Work to be completed under this Contract shall consist of furnishing all tools, equipment, materials, supplies and manufactured articles, labor, transportation, services, fuel, power, water, essential communications, and for performing Work or other operations required to construct the Almaden Valley Pipeline Inspection

and Rehabilitation Project as illustrated in the Plans and detailed in the Specifications. The work includes but is not limited to the following:

1. Dewatering Almaden Valley Pipeline and Santa Teresa Force Main.

2. Clearing vegetation near appurtenance vaults at locations noted on the Drawings.

3. Replacing or rehabilitating valves, pipe fittings, flanges, blind flanges, and piping within appurtenance structures.

4. Removing existing coating and repainting all parts within appurtenance vaults.

5. Raising vaults, installing valve operator extension stems and miter gearboxes, and replacing or installing ladders and hatches at appurtenance vaults.

6. Performing internal pipeline inspection, supporting District and third-party consultant with access for internal pipeline inspection and acoustic fiber optic installation, and performing internal pipeline repairs.

B. **Sole Source Products**. Not Used.

4. **Contract Time**. Time limit for the completion of the work is 170 calendar days.

A. **Milestone #1:** Dewatering – Almaden Valley Pipeline and Santa Teresa Force Main drained and pumped out. The Contractor shall complete Milestone #1 work before the expiration of 21 calendar days from the first day that the transmission system is taken out of service.

B. **Milestone #2:** Completion of all work on: Almaden Valley Pipeline between Calero Reservoir and Coleman Line Valve, and Santa Teresa Force Main. The Contractor shall complete Milestone #2 work before the expiration of 70 calendar days from the day that the Contractor receives authorization from the Engineer to proceed with Milestone #2 work. The Engineer shall issue the authorization to proceed with Milestone #2 work after the dewatering and District inspection of the site is complete.

C. **Milestone #3:** Completion of Almaden Valley Pipeline internal pipeline repairs and pipe appurtenance Work. The Contractor shall complete Milestone #3 work before the expiration of 164 calendar days from the First Chargeable Day of Contract.

D. Complete all remaining Work including site restoration (Project Completion).

5. **Liquidated Damages**. See Standard Provisions, Liquidated Damages, Article 5.07 and Special Provisions, Liquidated Damages, Article 12.05 of the Contract Documents for requirements regarding Liquidated Damages.

6. **Estimated Cost**. The estimated cost of the Project is between $3.0M and $3.6M. This estimate is intended to serve merely as an indication of the magnitude of the work. Neither the Bidder(s) nor the Contractor will be entitled to pursue a claim or be compensated due to variance in the stated estimated cost range.

   A. **Additive/Deductive Bid Items**. Not used.

   B. **Supplemental Bid Items**. These Bid Items may or may not be required. They may be deleted entirely or in part, by deductive change order(s), at the sole discretion of the District. The sum of the Total Base Bid and the Total Supplemental Bid will be used to determine the lowest Bid price.

7. **Contractor's License Requirement**. The Bidder must possess a Class A Contractor's license when the Bid is submitted.

8. **Pre-Bid Conference and Site Showing**. A pre-bid conference/site visit will be conducted by the District on August 24, 2017. The conference will convene at 8:00 AM in Room A-143 at District Headquarters Building located at 5700 Almaden Expressway, San Jose, CA 95118. The pre-bid conference will begin with a District presentation on the Small Business Outreach Program. A site visit will follow and a map will be provided.

   A Bid submitted by any Bidder not represented at a mandatory pre-bid conference/site visit will be considered non-responsive. Attendance at the pre-bid by subcontractors is not required.

   Attendance by the Bidder at the pre-bid conference/site visit is:

   ☒ Mandatory

   ☐ Optional

   The objective of the site visit is to familiarize prospective Bidders with the site; no additional site visits will be allowed. Please confirm your intent to attend the pre-bid meeting and site visit 24 hours in advance by sending e-mail to scvwdplanroom@valleywater.org.

   Reasonable efforts will be made to accommodate persons with disabilities wishing to attend the pre-bid meeting/site visit. Please request accommodations when confirming attendance.

9. **Availability of Bid Documents**. Contract Documents, including Drawings and Specifications, are available in both paper and electronic (pdf) formats. Paper copies may be purchased for the nonrefundable price of $40. Provide FedEx account number

or add $10 per set for packaging and postage. Electronic version is free, transferred via file transfer appliance (FTA) site.

To order Contract documents:	Request Form and information available online. Website: http://www.valleywater.org/Programs/Construction.aspx Email: scvwdplanroom@valleywater.org FAX: (408) 979-5631 Phone: (408) 630-3088
To pick up Contract documents in person:	Santa Clara Valley Water District 5700 Almaden Expressway San Jose, CA 95118 Business Hours: 8 a.m. – 5 p.m.

10. **Inquiries**. The Bidder must submit all requests for clarification, or interpretation of the Bid Documents in accordance with the requirements stated in Instructions to Bidders, Questions During Bidding, paragraph #7. Written questions must be directed to the project manager and submitted at least nine (9) calendar days before the deadline for receipt of Bids.

The District may issue written Addenda as appropriate for clarification or other purposes during the bidding period. Addendum notification(s) will be sent to each planholder at the email address provided by the contractor for the planholders list and addenda will be posted on the District's website at www.valleywater.org/Programs/Construction.aspx.

A. **Project Manager**. The District's project manager for this Project is Barton Ching and can be reached via e-mail at bching@valleywater.org or at (408) 630-3079.

B. **Process Questions**. For questions regarding the advertisement process, contact the District Plan Room at (408) 630-3088, or scvwdplanroom@valleywater.org.

11. **Prevailing Wage Requirements**.

A. Workers employed on this Project must be paid at rates at least equal to the prevailing wage rates as determined by the State of California Department of Industrial Relations pursuant to §1770 of the Labor Code. Said wage rates are incorporated herein by reference and may be inspected upon request. The rates are also available on the State of California Department of Industrial Relations website at http://www.dir.ca.gov/. See Standard Provisions, Prevailing Wages Article 4.04. through Appendices Article 4.06. for related requirements.

B. This Project is subject to compliance monitoring and enforcement by the State of California Department of Industrial Relations. The Contractor and subcontractors must furnish the records specified in Section 1776 directly to the Labor Commissioner, in the following manner: monthly, in a format prescribed by the Labor Commissioner.

12. **Bid Proposal Submittal**. All Bids must be submitted in sealed envelopes addressed to Construction Program of the Santa Clara Valley Water District, and state the Project name and Project number on the outside of the sealed envelope. Each Bid must be submitted on the prescribed Bid Forms. All information on Bid Forms must be completed in ink.

    A. **Alternate Delivery for Bid Submittal**. Bidders electing to submit a Proposal by FEDEX, UPS, DHL, CA Overnight, Golden State Overnight, etc., must address the submittal in accordance with instructions stated in Paragraph 12 above. Any Proposal received after 2 p.m. will be considered non-responsive.

    Address the outside delivery envelope as follows:

    Santa Clara Valley Water District
    Attention: Construction Program — **BID**
    5905 Winfield Boulevard
    San Jose, CA 95123-2428

    Note: USPS (US Mail) does not deliver to 5905 Winfield Boulevard.

13. **Bid Opening**. The Construction Program staff will open Proposals at the time and place stated in Notice, paragraph #1 above.

14. **Errors or Discrepancies in the Bids**. The District Board of Directors reserves the right to reject any and all Bid Proposals and to waive minor defects or irregularities in any submitted Bid Form(s).

15. **Bidder's Security**. Each Proposal must be accompanied by cash, a certified check, cashier's check, or an original Bidder's bond in the sum of not less than 10 percent of the total aggregate of the Proposal including all additive Bid items. Said checks or bond must be made payable to the Santa Clara Valley Water District.

16. **Contract Retention**.

    ☐ The Contract Retention for this Project is established at five (5) percent of the Contract Price.

    ☒ The Contract Retention for this Project is established at ten (10) percent of the Contract Price. The Board of Directors has made a finding that the Project is substantially complex based on the precision required to perform this critical work and shutdown schedule constraints necessary to minimize unplanned disruption in the delivery of raw water to Santa Clara County. Therefore, this Project requires retention higher than five percent.

17. **Substitution of Securities**. The Contractor may, at the Contractor's request and expense substitute securities equivalent to the amount withheld by District to ensure the performance of the contract in accordance with Public Contract Code Section 22300.

18. **Small Business Preference**. The District has elected to implement the small business preference provisions of Public Contract Code §2002(a)(1). For purposes of the District's program, a small or micro business is as defined in Government Code §14837. Please refer to the small business compliance requirements stated in the Small Business Instructions included with these Bid documents.

19. **Equal Opportunity**. The District is an equal opportunity employer and all contractors of District projects are to have and follow a policy of equal opportunity including adherence to all state and federal laws and regulations, including the Federal Equal Opportunity Clause.

20. **Permits**. The District has applied for and anticipates approval of the 1602 Lake and Streambed Alteration Agreement (LSAA) from the California Department of Fish and Wildlife prior to contract award. If the permit is not acquired prior to the date for award, the contract will not be awarded.

By order of the Board of Directors of the Santa Clara Valley Water District, San Jose, California, on August 8, 2017.

ATTEST: MICHELE L. KING, CMC

_____

Clerk/Board of Directors

Project Delivery Process

Almaden Valley Pipeline Inspection and Rehabilitation Project – Project No. 95084002

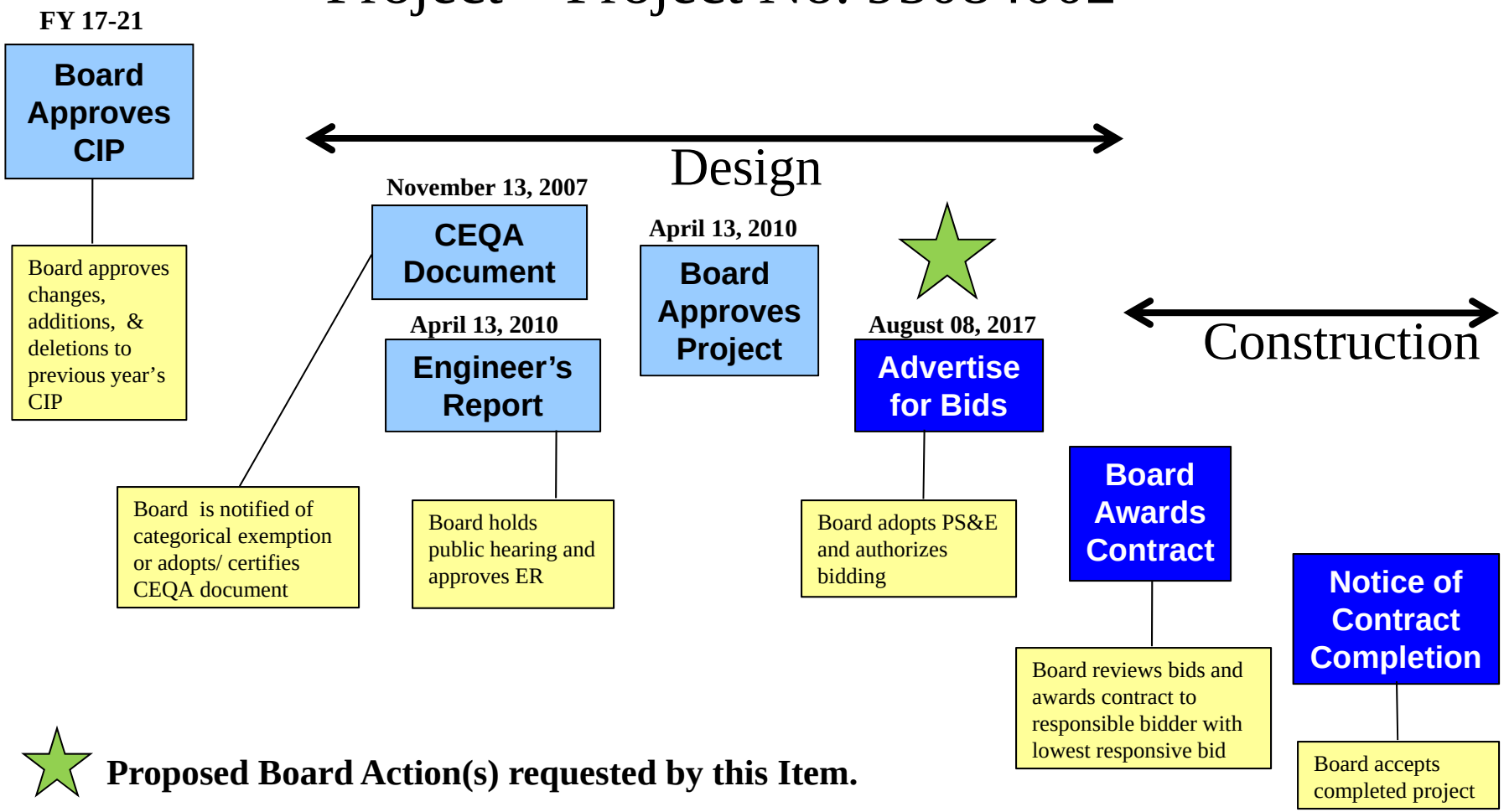

Proposed Board Action(s) requested by this Item.

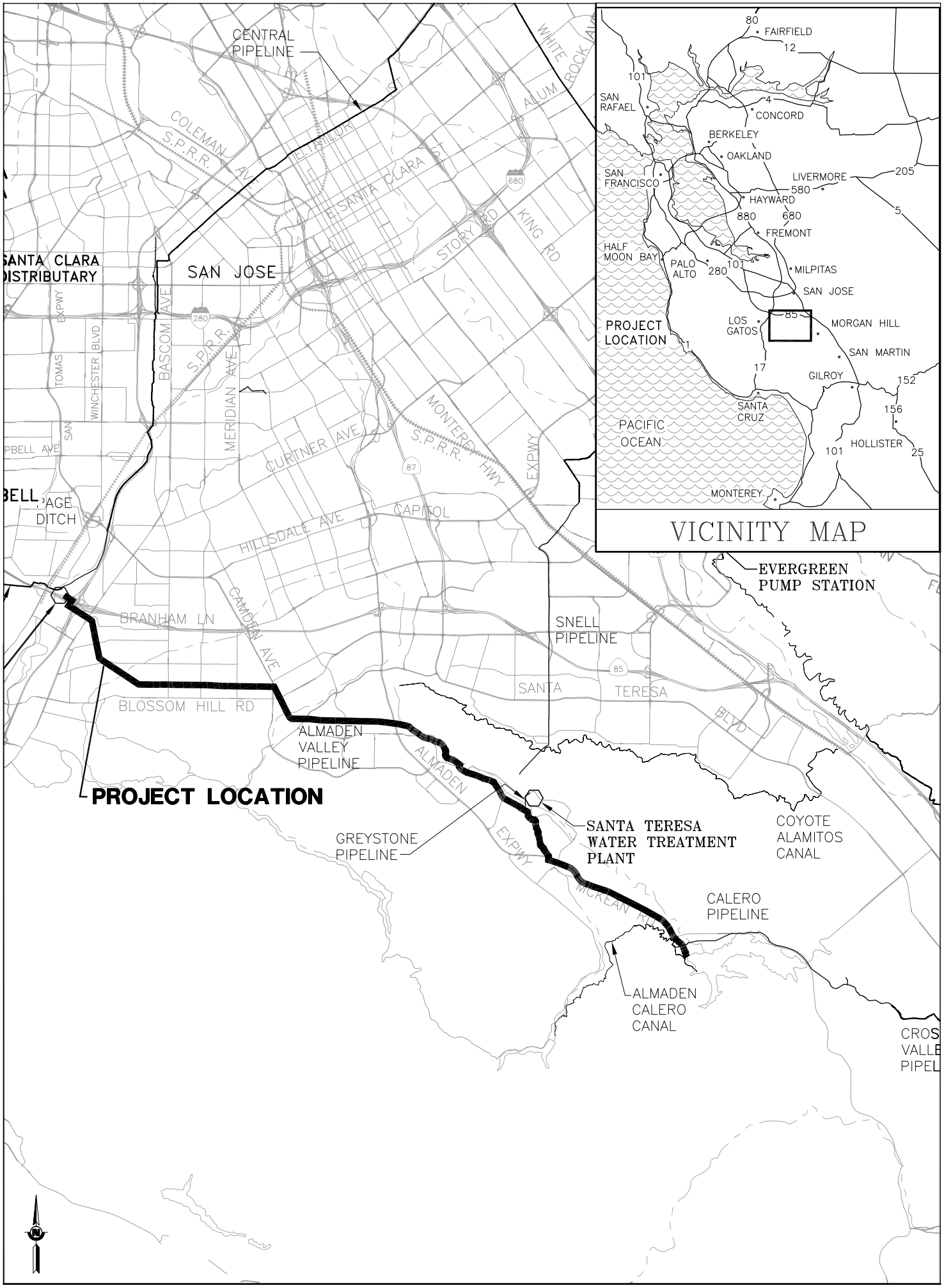

LOCATION MAP
SCALE: N.T.S.

Santa Clara Valley Water District

File No.: 17-0545

Agenda Date: 8/8/2017
Item No.: *3.2.

SUPPLEMENTAL BOARD AGENDA MEMORANDUM

SUBJECT:
Adopt Plans and Specifications and Authorize Advertisement for Bids for the Almaden Valley Pipeline Inspection and Rehabilitation Project, Project No. 95084002 Contract No. C0631 (City of San Jose, Town of Los Gatos, and Unincorporated Santa Clara County), (Districts 4 and 7).

REASON FOR SUPPLEMENTAL MEMORANDUM:
This report conveys additional information received after the initial report was released.

RECOMMENDATION:

A. Adopt the plans and specifications and authorize advertisement for bids for inspection and rehabilitation of the Almaden Valley Pipeline per the Notice to Bidders;

B. Authorize the Designated Engineer to issue addenda, as necessary, during the bidding process; and

C. Find that the Almaden Valley Pipeline Inspection and Rehabilitation Project is substantially complex and, therefore, requires a construction contract retention of 10 percent.

SUMMARY:
Board Governance Policy, Executive Limitation 7, Communication and Support to the Board, section 7.10.5 requires supplemental reports be issued conveying additional information received after the initial report was released. This supplemental item is provided to update Section 3 - Summary of Work and Section 4 - Contract Times in the Notice to Bidders (Attachment 1). This information provides an expanded list of Project milestones to potential bidders.

FINANCIAL IMPACT:
There is no financial impact associated with this item.

CEQA:
There is no change to Project compliance with CEQA associated with this item.

ATTACHMENTS:
Attachment 1: Revised Notice to Bidders

UNCLASSIFIED MANAGER:
Christopher Hakes, 408-630-3796
Katherine Oven, 408-630-3126

ALMADEN VALLEY PIPELINE INSPECTION AND REHABILITATION PROJECT

Project No. 95084002

Contract No. C0631

1. **Notice**. Notice is hereby given that sealed Bids will be accepted by the Construction Program of the Santa Clara Valley Water District, Room B108, of the District's Administration Building, 5750 Almaden Expressway, San Jose, California 95118 up to 2 p.m. on September 13, 2017, for furnishing all material and performing all work necessary for construction of the Almaden Valley Pipeline Inspection and Rehabilitation Project, in Santa Clara County, CA.

   Additional information and Instructions to Bidders is posted on the District's Construction Administration webpage: http://www.valleywater.org/Programs/Construction.aspx

2. **California State Department of Industrial Relations Contractor and SubContractor Registration Requirements**.

   (See Standard Provisions, Prevailing Wages, Article 4.04. for the full text.)

   California Labor Code section 1771.1 requires:

   A contractor or subcontractor shall not be qualified to bid on, be listed in a bid proposal, subject to the requirements of Section 4104 of the Public Contract Code, or engage in the performance of any contract for public work, unless currently registered and qualified to perform public work pursuant to Section 1725.5 of the California Labor Code.

   An inadvertent error in listing a subcontractor who is not registered pursuant to Section 1725.5 in a bid proposal shall not be grounds for filing a bid protest or grounds for considering the bid nonresponsive, provided that any of the following apply:

   (1) The subcontractor is registered prior to the bid opening.

   (2) Within 24 hours after the bid opening, the subcontractor is registered and has paid the penalty registration fee.

   (3) The subcontractor is replaced by another registered subcontractor pursuant to Section 4107 of the Public Contract Code.

3. **Summary of Work**

   A. **Project Description**. The project scope includes the following:

   The Work to be completed under this Contract shall consist of furnishing all tools, equipment, materials, supplies and manufactured articles, labor, transportation, services, fuel, power, water, essential communications, and for performing Work or other operations required to construct the Almaden Valley Pipeline Inspection

and Rehabilitation Project as illustrated in the Plans and detailed in the Specifications. The work includes but is not limited to the following:

1. Completely drain and remove water from the Almaden Valley Pipeline and Santa Teresa Force Main.

2. Perform work in the raw water transmission pipeline and at ninety-three (93) appurtenance vault sites. See the Pipeline Maintenance Tables on Sheets G-04 through G-08 on the Drawings for descriptions of the appurtenance work to be completed at each site.

3. Provide logistical support for and participate in the manned internal visual and electromagnetic inspection of the Almaden Valley Pipeline and Santa Teresa Force Main by the District and its third-party consultant.

4. Provide logistical support for the installation of the Acoustic Fiber Optic (AFO) monitoring system for the Almaden Valley Pipeline and Santa Teresa Force Main by the District and its third-party consultant.

5. Clear and grub as needed for access to perform the Work.

6. Prepare and coat all in-vault and exposed pipeline appurtenances and associated piping assembly components.

7. Replace existing or install new ladders and hatches at appurtenance vaults. The contractor shall design, furnish, and install all fixed vault ladders.

8. Restore all impacted work sites to a condition equal to or better than existing prior to construction.

B. Sole Source Products. Not Used.

4. Contract Time. Time limit for the completion of the work is **196** calendar days.

See Table 1 for Tentative Schedule of Work. Refer to Articles 12.01. and 12.03. of the Contract Documents for detailed Project Milestone Completion dates and requirements.

*This form must be completed in **ink** and changes must be **initialed**.*

Table 1: Tentative Schedule of Work

Description	Duration (Calendar Days)	Start Date	End Date
Milestone 1: Scope of work Site Preparation & Equipment Staging	19	October 09, 2017	October 27, 2017
Pipeline Isolation, Lockout tagout, & Initial District Draining	3	October 27, 2017	October 29, 2017
Milestone 2: Scope of Work Pipeline Dewatering & Inspection Preparation	19	October 30, 2017	November 17, 2017
Internal Pipeline Visual & EM Inspection Support	3	November 20, 2017	November 22, 2017
Milestone 3: Scope of Work AFO Monitoring Installation	24	October 30, 2017	November 22, 2017
Acoustic Fiber Optic (AFO) Installation Support	26	November 27, 2017	December 22, 2017
Milestone 4: Scope of Work Shutdown Required Work	54	November 20, 2017	January 12, 2018
Pre-fill Appurtenance Inspection	5	January 15, 2018	January 19, 2018
Pipeline De-isolation, Lockout Tagout, Fill & Pressurization	2	January 22, 2018	January 23, 2018
Pressurization Appurtenance Inspection	3	January 24, 2018	January 26, 2018
Milestone 5: Scope of Work Shutdown Required Work	96	November 20, 2017	February 23, 2018
Pre-fill Appurtenance Inspection	3	February 26, 2018	February 28, 2018
Pipeline De-isolation, Lockout Tagout, Fill & Pressurization	2	March 01, 2018	March 02, 2018
Pressurization Appurtenance Inspection	3	March 05, 2018	March 07, 2018
Milestone 6: Scope of Work Non-Shutdown Required Work	23	March 08, 2018	March 30, 2018
Milestone 7: Scope of Work Project Completion	20	March 31, 2018	April 19, 2018

5. **Liquidated Damages**. See Standard Provisions, Liquidated Damages, Article 5.07 and Special Provisions, Liquidated Damages, Article 12.05 of the Contract Documents for requirements regarding Liquidated Damages.

6. **Estimated Cost**. The estimated cost of the Project is between $3.0M and $3.6M. This estimate is intended to serve merely as an indication of the magnitude of the work. Neither the Bidder(s) nor the Contractor will be entitled to pursue a claim or be compensated due to variance in the stated estimated cost range.

   A. **Additive/Deductive Bid Items**. Not used.

   B. **Supplemental Bid Items**. These Bid Items may or may not be required. They may be deleted entirely or in part, by deductive change order(s), at the sole discretion of the District. The sum of the Total Base Bid and the Total Supplemental Bid will be used to determine the lowest Bid price.

7. **Contractor's License Requirement**. The Bidder must possess a Class A Contractor's license when the Bid is submitted.

8. **Pre-Bid Conference and Site Showing**. A pre-bid conference/site visit will be conducted by the District on August 24, 2017. The conference will convene at 8:00 AM in Room A-143 at District Headquarters Building located at 5700 Almaden Expressway, San Jose, CA 95118. The pre-bid conference will begin with a District presentation on the Small Business Outreach Program. A site visit will follow and a map will be provided.

   A Bid submitted by any Bidder not represented at a mandatory pre-bid conference/site visit will be considered non-responsive. Attendance at the pre-bid by subcontractors is not required.

   Attendance by the Bidder at the pre-bid conference/site visit is:

   ☒ Mandatory

   ☐ Optional

   The objective of the site visit is to familiarize prospective Bidders with the site; no additional site visits will be allowed. Please confirm your intent to attend the pre-bid meeting and site visit 24 hours in advance by sending e-mail to scvwdplanroom@valleywater.org.

   Reasonable efforts will be made to accommodate persons with disabilities wishing to attend the pre-bid meeting/site visit. Please request accommodations when confirming attendance.

9. **Availability of Bid Documents**. Contract Documents, including Drawings and Specifications, are available in both paper and electronic (pdf) formats. Paper copies may be purchased for the nonrefundable price of $40. Provide FedEx account number

or add $10 per set for packaging and postage. Electronic version is free, transferred via file transfer appliance (FTA) site.

To order Contract documents:	Request Form and information available online. Website: http://www.valleywater.org/Programs/Construction.aspx Email: scvwdplanroom@valleywater.org FAX: (408) 979-5631 Phone: (408) 630-3088
To pick up Contract documents in person:	Santa Clara Valley Water District 5700 Almaden Expressway San Jose, CA 95118 Business Hours: 8 a.m. – 5 p.m.

10. **Inquiries**. The Bidder must submit all requests for clarification, or interpretation of the Bid Documents in accordance with the requirements stated in Instructions to Bidders, Questions During Bidding, paragraph #7. Written questions must be directed to the project manager and submitted at least nine (9) calendar days before the deadline for receipt of Bids.

The District may issue written Addenda as appropriate for clarification or other purposes during the bidding period. Addendum notification(s) will be sent to each planholder at the email address provided by the contractor for the planholders list and addenda will be posted on the District's website at www.valleywater.org/Programs/Construction.aspx.

A. **Project Manager**. The District's project manager for this Project is Barton Ching and can be reached via e-mail at bching@valleywater.org or at (408) 630-3079.

B. **Process Questions**. For questions regarding the advertisement process, contact the District Plan Room at (408) 630-3088, or scvwdplanroom@valleywater.org.

11. **Prevailing Wage Requirements**.

A. Workers employed on this Project must be paid at rates at least equal to the prevailing wage rates as determined by the State of California Department of Industrial Relations pursuant to §1770 of the Labor Code. Said wage rates are incorporated herein by reference and may be inspected upon request. The rates are also available on the State of California Department of Industrial Relations website at http://www.dir.ca.gov/. See Standard Provisions, Prevailing Wages Article 4.04. through Appendices Article 4.06. for related requirements.

B. This Project is subject to compliance monitoring and enforcement by the State of California Department of Industrial Relations. The Contractor and subcontractors must furnish the records specified in Section 1776 directly to the Labor Commissioner, in the following manner: monthly, in a format prescribed by the Labor Commissioner.

12. **Bid Proposal Submittal**. All Bids must be submitted in sealed envelopes addressed to Construction Program of the Santa Clara Valley Water District, and state the Project name and Project number on the outside of the sealed envelope. Each Bid must be submitted on the prescribed Bid Forms. All information on Bid Forms must be completed in ink.

    A. **Alternate Delivery for Bid Submittal**. Bidders electing to submit a Proposal by FEDEX, UPS, DHL, CA Overnight, Golden State Overnight, etc., must address the submittal in accordance with instructions stated in Paragraph 12 above. Any Proposal received after 2 p.m. will be considered non-responsive.

    Address the outside delivery envelope as follows:

    Santa Clara Valley Water District
    Attention: Construction Program — **BID**
    5905 Winfield Boulevard
    San Jose, CA 95123-2428

    Note: USPS (US Mail) does not deliver to 5905 Winfield Boulevard.

13. **Bid Opening**. The Construction Program staff will open Proposals at the time and place stated in Notice, paragraph #1 above.

14. **Errors or Discrepancies in the Bids**. The District Board of Directors reserves the right to reject any and all Bid Proposals and to waive minor defects or irregularities in any submitted Bid Form(s).

15. **Bidder's Security**. Each Proposal must be accompanied by cash, a certified check, cashier's check, or an original Bidder's bond in the sum of not less than 10 percent of the total aggregate of the Proposal including all additive Bid items. Said checks or bond must be made payable to the Santa Clara Valley Water District.

16. **Contract Retention**.

    ☐ The Contract Retention for this Project is established at five (5) percent of the Contract Price.

    ☒ The Contract Retention for this Project is established at ten (10) percent of the Contract Price. The Board of Directors has made a finding that the Project is substantially complex based on the precision required to perform this critical work and shutdown schedule constraints necessary to minimize unplanned disruption in the delivery of raw water to Santa Clara County. Therefore, this Project requires retention higher than five percent.

17. **Substitution of Securities**. The Contractor may, at the Contractor's request and expense substitute securities equivalent to the amount withheld by District to ensure the performance of the contract in accordance with Public Contract Code Section 22300.

18. **Small Business Preference**. The District has elected to implement the small business preference provisions of Public Contract Code §2002(a)(1). For purposes of the District's program, a small or micro business is as defined in Government Code §14837. Please refer to the small business compliance requirements stated in the Small Business Instructions included with these Bid documents.

19. **Equal Opportunity**. The District is an equal opportunity employer and all contractors of District projects are to have and follow a policy of equal opportunity including adherence to all state and federal laws and regulations, including the Federal Equal Opportunity Clause.

20. **Permits**. The District has applied for and anticipates approval of the 1602 Lake and Streambed Alteration Agreement (LSAA) from the California Department of Fish and Wildlife (CDFW) prior to contract award. District staff received a Complete Notification from CDFW dated July 21, 2017 and therefore CDFW has until September 19, 2017 to issue a draft agreement or inform District staff that an agreement is not required.

By order of the Board of Directors of the Santa Clara Valley Water District, San Jose, California, on August 8, 2017.

ATTEST: MICHELE L. KING, CMC

_____

Clerk/Board of Directors

Santa Clara Valley Water District

File No.: 17-0525

Agenda Date: 8/8/2017
Item No.: 3.3.

BOARD AGENDA MEMORANDUM

SUBJECT:
Report of Bids Received and Award of Construction Contract to Dixon Marine Services Inc. - for Construction of the Palo Alto Flood Basin Tide Gate Structure Improvements Project, Project No. 10394001, Contract No. C0630 (Palo Alto) (District 7). (Continued from 07/25/2017)

RECOMMENDATION:
A. Ratify Addenda No. 1 through No. 3 to the Contract Documents for the Palo Alto Flood Basin Tide Gate Structure Improvements Project, Project;

B. Waive minor irregularities in Dixon Marine Services Inc. bid;

C. Award the Construction Contract to Dixon Marine Services Inc. in the sum of $579,081.07; and

D. Approve a contingency sum of $60,000 and authorize the Interim Chief Executive Officer or designee to approve individual change orders up to the designated amount.

SUMMARY:
The Palo Alto Flood Basin (PAFB) Tide Gate Structure Improvements Project was initiated following emergency repair work on the Palo Alto tide gates which was completed in September 2012. The repair work addressed water flow occurring beneath the tide gate structure. The temporary repair arrested significant under flow; however, additional and permanent improvements are required to avoid future fluvial flooding in the lower reaches of Matadero, Adobe, and Barron creeks and impacts to wildlife and aquatic habitats in the flood basin.

The PAFB Tide Gate Structure was built in 1956. The purpose of the structure is to control the downstream water surface elevation for Matadero Creek, Adobe Creek, and Barron Creek, which all drain to the PAFB. The PAFB controls the downstream boundary condition (starting water surface elevation) for these creeks by keeping the high tide out and allowing the Basin to empty out during the twice daily low tides. Of the current 16 tide gates, 15 are operated by the District and one is operated by the City of Palo Alto. The latter is operated to allow some tidal inflow to the Basin, subject to an elevation limit to provide PAFB flood protection capacity. Since Bay waters have limited access to the PAFB, it has developed a brackish habitat, different from adjacent saltwater wetlands. This habitat would be changed if the tide gates would become ineffective.

The PAFB and tide gate structure provide significant flood protection benefits during low tidal events

and, as mentioned above, the tide gates protect significant brackish marsh habitat. The tide gates have outlived their initial 50-year structural life and exhibit signs of aging such as spalling concrete and exposed reinforcement steel, as well as the very significant seepage problem that was addressed by an emergency project in 2012. This seepage may reoccur at any time.

Staff has conducted a preliminary planning study for replacing the tide gate structures. The problem and alternatives evaluation of the Project identified a two-phased approach to improving the PAFB. The scope of this first phase will be to immediately repair the tide gate structure and ensure the hydraulic performance of Adobe, Barron, and Matadero Creeks.

The second phase scope of work will be to coordinate District resources during the intermediate term with ongoing external efforts that include the PAFB. These projects include the San Francisquito Creek Joint Powers Authority's (SFCJPA) Strategy to Advance Flood protection, Ecosystems, and Recreation along the Bay (SAFER Bay) Project, the District's South San Francisco Bay Shoreline Project, the South Bay Salt Pond Restoration Project, and projects under development by the City of Mountain View. The Project team expects that this intermediate term and collaborative project would likely result in a more efficient alternative to improve the PAFB and maintain the current level of flood protection in Matadero, Adobe, and Barron creeks. A Project Map is provided at Attachment 1.

The work in this Project will include dewatering of each cell of the tide gate, repairing spalled concrete surfaces, injecting epoxy into cracks in concrete, placing a polyester concrete overlay on the tide gates structure deck, and replacing the existing 36" chain link railing with a new 48" chain link railing at each side on existing deck.

Addenda Ratification
3 addenda (Attachment 2) were issued during the bid period to clarify the Project Contract Documents. To formally incorporate the addenda into the Project Contract Documents, staff recommends that the Board ratify the addenda.

Waiver of Minor Irregularities in Dixon Marine Services Inc.'s Bid
Per the Notice to Bidders paragraph 14, Errors or Discrepancies in the Bid, the District reserved its right to reject any and all bid proposals and to waive minor defects and irregularities in any submitted bid form; Dixon Marine Services Inc.'s Bid contained a minor error.

On the Proposal and Bid Items, Bid Form 1, the Bidder rounded the Bid Item extensions. The corrected total, $579,081.07 resulted in Dixon Marine Services Bid being decreased by $8.93 from the amount shown as its Total Bid.

This error is not material. It does not affect Dixon Marine Services Inc.'s ability to fulfill the contract, or give the firm an unfair advantage in the competitive bidding process for the Project. Staff recommends that the Board waive this minor irregularity.

Contract Award

A report of bids received at the bid opening for the Project on June 28, 2017 is summarized in Table 1, Bid Results. The apparent low bid was submitted by Dixon Marine Services Inc. In accordance with the Bid Documents, all bids submitted will expire forty-five (45) days after the public bid opening.

Staff has reviewed the bid proposals and, for the reasons stated below, recommends the Board award the contract to Dixon Marine Services Inc. (Dixon Marine) as the responsible bidder submitting the lowest responsive bid:

1. All bid entries and requirements in the proposal submitted by Dixon Marine are in order or can be waived as a minor irregularity;

2. Dixon Marine's license is current, active and in good standing;

3. Dixon Marine has complied with the District's Small Business Enterprise (SBE) Outreach program; and

4. Dixon Marine is in compliance with the requirements of the California Labor Code §1771.1. Dixon Marine and its subcontractors are registered with the California Department of Industrial Relations and qualified to perform public works pursuant to Section 1725.5 of the Labor Code.

Table 1 - Bid Results

Company, Location	Bid Amount	Award Amount
Dixon Marine Services Inc., Inverness, CA	$ 579,081.07	$ 579,081.07
Cazadoro Construction, Inc., San Francisco, CA	$ 803,060	
Engineer's Estimate: $ 286,820		

There is a $300,000 difference between the lowest bid and the engineer's estimate. The discrepancy is mainly due to the bid items for mobilization, dewatering cell, concrete overlay, and metal structures. Per our design consultant all their projects' bids this month came in much higher than expected. Recent District's Permanente Creek Channel Improvements and Lower Silver Creek projects bids were also over the engineer's estimate by $1.1 and $1.3M respectively. Our engineer cost estimate was based on 2016 Caltrans Cost Data and did not account adequately for recent changes in market conditions.

Contingency Funds
To allow staff to quickly address unforeseen or changed site conditions and other unanticipated occurrences, without causing unnecessary delays or consequential costs to the Project, staff recommends the Board approve a total contingency amount of $60,000 which amounts to approximately 10% of the contract award amount.

The contingency amount is estimated due to known and unknown risks, such as concealed

conditions and/or field conditions that may be different from the baseline or as-built information used in preparation of Project Contract Documents;

Approval of individual change orders up to the designated amounts are as follows:

Engineering Unit Manager: $50,000

Deputy Operating Officer: up to the total amount of the contingency

Outreach to Bidders
As part of the District's customary small and local business outreach, the following routine steps were taken: the Notice to Bidders was sent to 20 minority business Chambers of Commerce and small business groups. In addition, the Notice was sent to certified small business contractors and local and regional firms that have the appropriate license for this type of work. The Notice was provided to the Santa Clara and San Benito Counties Building and Construction Trades Council, which maintains contacts with at least 500 contractors and 70 union representatives, for distribution to their members.

Public Outreach
The District will lead the public outreach and communication for the Project and serve as the main Project contact for the community and media. The District will use a variety of outreach activities to keep the community informed of the Project progress and important milestones. Outreach efforts will include physical site and trail closure signage, social media Nextdoor posts as needed, website posts as needed, and coordination with the District's partners at the City of Palo Alto, Bay Trail, Baylands Nature Preserve and Silicon Valley Bicycle Coalition. During construction, the outreach messages will focus on the Project benefits and impacts to trail and park users, and will be targeted to the surrounding neighborhoods and businesses.

Next Steps
If the Board approves the recommendations, staff will proceed with administering construction of the Project. The construction work is anticipated to be completed in December 2017.

FINANCIAL IMPACT:
The total cost for the recommended construction contract, including the change order contingency sum of $60,000, is $639,081. Adequate funding for this contract is included in the FY 2017-18 budget, Project #10394001.

CEQA:

Staff has determined that the implementation of this Project will meet the requirements of the minor maintenance in-kind repair activity under the District's Stream Maintenance Program (SMP). The construction of this Project has been included in the Notice of Proposed Work (NPW) to the permitting regulatory agencies for 2017 instream work season.

All the necessary permits for the Project have been obtained.

ATTACHMENTS:
Attachment 1: Project Map
Attachment 2: Addenda Nos. 1 through 3

UNCLASSIFIED MANAGER:
Ngoc Nguyen, 408-630-2632

Palo Alto Flood Basin Project Map

THIS PAGE INTENTIONALLY LEFT BLANK

Santa Clara Valley Water District

CAPITAL PROGRAM SERVICES
5750 ALMADEN EXPRESSWAY
SAN JOSE, CA 95118-3686
TELEPHONE (408) 630-3088
FACSIMILE (408) 979-5631
www.valleywater.org
scvwdplanroom@valleywater.org

Notification of this Addendum is transmitted via email to all current plan holders. This Addendum is posted on the District website at www.valleywater.org/Programs/Construction.aspx.

June 7, 2017

ADDENDUM NO. 1
TO CONTRACT DOCUMENTS FOR THE
PALO ALTO FLOOD BASIN TIDE GATE STRUCTURE IMPROVEMENTS PROJECT
Project No. 10394001 Contract No. C0630

Notice is hereby given to Prospective Bidders that the Contract Documents are modified as hereinafter set forth.

BID DOCUMENTS

TITLE PAGE

REPLACE the text that reads "Bid Opening: June 21, 2017" with the following text:

"Bid Opening: June **28**, 2017"

NOTICE TO BIDDERS

REPLACE Paragraph 1. with:

"1. **Notice**. Notice is hereby given that sealed Bids will be accepted by the Construction Program of the Santa Clara Valley Water District, Room B108, of the District's Administration Building, 5750 Almaden Expressway, San Jose, California 95118 up to 2 p.m. on **June 28**, 2017, for furnishing all material and performing all work necessary for construction of the Palo Alto Flood Basin Tide Gate Improvements (Project), in the City of Palo Alto, California."

THIS ADDENDUM NO. 1, WHICH CONTAINS 1 PAGE, IS ATTACHED TO AND IS A PART OF THE SPECIFICATIONS AND CONTRACT DOCUMENTS FOR THIS PROJECT.

N. Nguyen Date: 06/07/2017

Ngoc Nguyen, P.E.
Interim Deputy Operating Officer
Watershed Design and Construction Division

CAPITAL PROGRAM SERVICES
5750 ALMADEN EXPRESSWAY
SAN JOSE, CA 95118-3686
TELEPHONE (408) 630-3088
FACSIMILE (408) 979-5631
www.valleywater.org
scvwdplanroom@valleywater.org

Notification of this Addendum is transmitted via email to all current plan holders.
This Addendum is posted on the District website at
www.valleywater.org/Programs/Construction.aspx.

June 21, 2017

ADDENDUM NO. 2
TO CONTRACT DOCUMENTS FOR THE
PALO ALTO FLOOD BASIN TIDE GATE STRUCTURE IMPROVEMENTS PROJECT
Project No. 10394001 Contract No. C0630

Notice is hereby given to Prospective Bidders that the Contract Documents are modified as hereinafter set forth.

BID DOCUMENTS

Notice to Bidders

REPLACE Paragraph 3.A.5. with:

"5. Remove existing **42**" chain link railing and construct a new **54**" chain link railing at each side on deck; and"

REPLACE BID FORM NO. 1 Proposal Form and Bid Items with BID FORM NO. 1 (REV 1) Proposal Form and Bid Items **(ATTACHMENT 1)**

SPECIFICATIONS AND CONTRACT DOCUMENTS

SPECIAL PROVISIONS

SECTION 12. WORK AND CONTRACT TIMES

ARTICLE 12.01. Summary of Work

A.5. **REPLACE** Paragraph A.5. with:

"5. Remove existing **42"** chain link railing and construct a new **54"** chain link railing at each side on deck"

SECTION 18. PERMITS AND REGULATIONS

ARTICLE 18.13. Payment

A. **REPLACE** Paragraph A. in its entirety with:

"A. Unless noted otherwise, full compensation for work involved in complying with all requirements under Section 18. shall be considered incidental and included in the contract prices paid for the various items of work involved and no additional time or compensation will be allowed thereof."

SECTION 19. ENVIRONMENTAL

DELETE ARTICLE 19.01.01. Payment in its entirety.

ARTICLE 19.03. BMP Action Plan

F. **ADD** the following text to the end of Paragraph F.:

"BMP Action Plan shall be submitted no later than 10 Days after the date of issuance of the NTP."

DELETE ARTICLE 19.03.01. Payment in its entirety.

ARTICLE 19.07.02. Qualified Biologist

A. **REPLACE** text "…A Contractor supplied…" with:

"…A District supplied…"

ARTICLE 19.07.07. Submittals

A. **REPLACE** Paragraph A. in its entirety with:

"A. Article not used."

DELETE **ARTICLE 19.07.08. Payment** in its entirety.

ARTICLE 19.12. Payment

A. **REPLACE** Paragraph A. in its entirety with:

"A. Unless noted otherwise, full compensation for work involved in complying with all requirements under Section 19. shall be considered incidental and included in the contract prices paid for the various items of work involved and no additional time or compensation will be allowed thereof."

SECTION 21. PAYMENT PROCEDURES

ARTICLE 21.02. Progress Payments and Schedule of Values

B. **REPLACE** Paragraph B. in its entirety with:

"B. This Article includes requirements for the preparation, format, and submission of the Schedule of Values."

C. **ADD** new Paragraph C. as follows:

"C. Progress payments will not be made until the Schedule of Values has received favorable review by the Engineer."

D. **ADD** new Paragraph D. as follows:

"D. No progress payment made to the contractor or its sureties will constitute a waiver of the liquidated damage under Article 5.07 of these Specifications."

ADD new **Article 21.02.01. Preparation** as follows:

"A. Prepare preliminary and final Schedule of Values identifying costs of all bid items. For lump sum bid items, include costs of all major components of work under that bid item. No component of lump sum bid items shall have a duration exceeding 15 days except concrete curing, submittal review, equipment fabrication, and deliveries, or a value greater than $50,000.

B. Assign prices to major components of lump sum bid items totaling the bid item price. Base prices on costs associated with scheduled activities based on the Progress Schedule for each major component of work. Each bid item and each component of lump sum bid items shall include a directly proportional amount of the Contractor's overhead and profit. The Contractor's overhead and profit shall be completely distributed among all bid items of work, including components of lump sum bid items. Provide additional cost documentation to the Engineer when requested so that values can be verified.

C. Submit the preliminary Schedule of Values within 10 calendar days from the date of the Notice to Begin Work and revise to incorporate Engineer's comments until a final Schedule of Values is agreed upon.

D. For all construction change order authorizations, provide change order authorization breakdown to append to the final Schedule of Values items for at least the following components: (a) site work, (b) structure, (c) electrical, (d) mechanical, (e) instrumentation, (f) heating, ventilation, and air conditioning, (g) demolition, (h) submittals, operation and maintenance manuals, and training; and (i) testing and startup. Provide additional cost documentation to the Engineer when requested.

E. The Contractor shall not change the final approved Schedule of Values without the approval of the Engineer. The Schedule of Values has a one-to-one direct relationship to the list of activities on the Contractor's Progress Schedule. Additions or deletions of activities on the Contractor's Progress Schedule will require an addition or deletion of line item value to the Schedule of Values. The Contractor must submit requested changes to the approved Schedule of Values to the Engineer for approval.

F. The Contractor shall list and maintain all values for items of equipment that will be submitted for material on-site payment separately on the Schedule of

Values and on the Progress Schedule. These material items will not be "progressed" as a part of the physical progress assessment."

ADD new **Article 21.02.02. Submittals** as follows:

"A. Submit corrected Schedule of Values within 10 days upon receipt of reviewed Schedule of Values comments, but no later than 10 days prior to anticipated submittal of the first Application for Payment."

ADD new **Article 21.02.03. Preliminary Schedule of Values** as follows:

"A. Table 21.02.03.A. below is an acceptable form for the preliminary Schedule of Values.

B. The preliminary and final Schedule of Values shall be prepared into a Microsoft Excel format onto 8½-inch by 11-inch paper. Identify the schedule with:

1. District's Name, Project Name and Project No.

2. Name and address of Contractor.

3. Date of submission."

ADD new **Table 21.02.03.A.** as follows:

TABLE 20.02.03.A Preliminary Schedule of Values				
Item No.	**Approximate Quantities and Units**	**Description of Item**	**Unit Price**	**Total Price**
1	1 LS	Mobilization	$	$
2	8 EA	Dewatering Cells	$	$
3	200 SF	Repair Spalled Concrete (Deck)	$	$
4	1,596 SF	Polyester Concrete Overlay	$	$
5	200 LF	Epoxy Crack Injection	$	$
6	400 SF	Repair Spalled Concrete (Cells)	$	$
7	2,100 LBS	Remove Concrete Waste	$	$
8	237 LF	Chain Link Railing	$	$
9	2 CY	Aggregate Base	$	$
10	1 LS	Steel Structures	$	$
	GRAND TOTAL			**$**
TOTAL AMOUNT OF BID (PRICE IN WORDS)				

ARTICLE 21.03. Progress Payment Retention

A. **REPLACE** text "…at ten (10) percent…" with:

"…at five (5) percent…"

ADD new **Article 21.04. Cost Summaries** as follows:

"A. Prepare a "Summary of Cost Information" on each major item of work listed in the Schedule of Values. Identify the value of work completed for both the payment period and job to date."

TECHNICAL PROVISIONS

SECTION 25. REPAIR SPALLED CONCRETE (DECK)

ARTICLE 25.03. Submittals

B. **ADD** new Paragraph B. as follows:

"B. Submit a concrete demolition and placement plan per Section 7.04 of the Standard Provisions. The demolition and placement plan must include:

1. Procedures for isolating and protecting against any concrete debris entering the wetted channel during deck spall repair.

2. Procedures for isolating and protecting against any freshly placed concrete entering the wetted channel during concrete placement activities. For more information, see Bank Stabilization BMPs in SMP Manual Attachment F."

SECTION 27. EPOXY CRACK INJECTION

ARTICLE 27.09. Field Quality Control

A. **DELETE** Paragraph A. in its entirety.

SECTION 28. REPAIR SPALLED CONCRETE (CELLS)

ARTICLE 28.03 Submittals

ADD new Paragraph B. as follows:

"B. Submit a concrete demolition and placement plan per Section 7.04 of the Standard Provisions. The demolition and placement plan must include:

1. Procedures for isolating and protecting against any concrete debris entering the wetted channel during cell spall repair.

2. Procedures for isolating and protecting against any freshly placed concrete entering the wetted channel during concrete placement activities. For more information, see Bank Stabilization BMPs in SMP Manual Attachment F."

SECTION 29. REMOVE CONCRETE WASTE

ARTICLE 29.04. Submittals

ADD new Paragraph D. as follows:

"D. Submit a concrete demolition plan per Section 7.04 of the Standard Provisions. The demolition plan must include:

1. Procedures for isolating and protecting against any concrete debris entering the wetted channel during concrete removal."

SECTION 31. AGGREGATE BASE

ARTICLE 31.05. Construction

B. **REPLACE** Paragraph B. in its entirety with:

"B. The material shall be placed in layers of uniform thickness with an approved spreader. When a compacted layer is 6 inches or less in thickness is required, the material shall be placed in a single layer. When a compacted layer in excess of 6 inches is required, the material shall be placed in layers of equal thickness. No layer shall be thicker than 6 inches or thinner than 3 inches when compacted. The layers shall be so placed that when compacted they will be true to the grades or levels required with the least possible surface disturbance."

ADD new Paragraph C. as follows:

"C. Each layer of the aggregate base shall be compacted as specified with approved compaction equipment. The relative compaction of each layer of compacted base material shall not be less than 95 percent per ASTM D 1557. Rolling shall begin at the outside edge of the surface and proceed to the center, overlapping on successive trips at least one half of the roller. Alternate trips of the roller shall be slightly different lengths. Speed of the roller shall be such that displacement of the aggregate does not occur. In all places not accessible to the rollers, the material shall be compacted with hand-operated power tampers."

SECTION 32. STEEL STRUCTURES

ARTICLE 32.03. Materials

A. **ADD** text to the end of Paragraph:

"and shall be hot-dip galvanized."

GENERAL QUESTIONS & RESPONSE

Question 1	The permit allows work on the tide gate from September 1 through October 15. Is this for in-water work only? Can the contractor perform the deck work (overlay & railing replacement) outside this window?
Response 1	Yes, the October 15, 2017 milestone is for all in-water work. Deck work can continue after October 15 through Project Completion.
Question 2	What is the allowable equipment weight allowed on the tide gate? Are there restrictions for cranes or equipment with outriggers?
Response 2	The tide gate structure can accommodate an excavator weighing approximately 30,000 lbs to be driven across the structure but not set up. The structure can also accommodate a small 6,000 lb capacity crane weighing approximately 17,000 lbs to be set up on the deck. Crane outriggers should be placed over the concrete walls of the structure.
Question 3	Are there any special locking requirements for the gates shown at each end of the tide gate?
Response 3	There are no special locking requirements for the 6' temporary chain link fences.
Question 4	Will the SMP Biologist be supplied by the District or by the Contractor?
Response 4	See revisions to Article 19.07.02 and 19.07.07 in Addendum 2.
Question 5	Where is a copy of the SMP Manual located?
Response 5	The SMP Manual has been uploaded to the District's Construction Administration website at: http://www.valleywater.org/Programs/Construction.aspx
Question 6	Are there any Buy America requirements for this project?
Response 6	There are no Buy America requirements for this project.
Question 7	Will outside testing agency testing be required on the spall repairs of the structure cells and the structure deck? Specifically, will coring and tension tests be required?
Response 7	No, coring and tension tests will not be required.
Question 8	Will the four inclement weather delays mentioned in Section 12-3 extend the October 15th completion date for the work in the cells if there are indeed four or more inclement weather delays in October?
Response 8	The four inclement weather delays mentioned in Article 12.04 would not extend the October 15th milestone completion date for all in-water work. October 15th is

	the date set by the SMP regulatory permitting agencies. See Article 12.03.C. for extensions past October 15th.
Question 9	Section 16-3 states that there can be no work on Saturdays or Sundays. If the contractor is willing to pay for inspection costs can weekend work be allowed or is this a requirement do to the public using the park?
Response 9	Per Article 18.02.C., no Work shall be performed on Saturdays or Sundays or on any holiday listed in Article 18.02.D. unless approved in writing by the Engineer.
Question 10	Can the cores taken per Section 27-4 be taken by the contractor or does this coring have to be done by an independent testing lab?
Response 10	In this Addendum No. 2, we have removed the requirement to take core samples of the epoxy injection.
Question 11	Can bidding contractors review a larger size set of as-built of the original structure? The plans in the specifications are almost impossible to read and some other contract drawing of the structure may be helpful.
Response 11	These are the only available as-builts.
Question 12	I cannot seem to pull up Appendix F. but I will try again with some IT help tomorrow. Was Appendix F. (Permits) part of the original bid set specifications?
Response 12	The SMP Permits were a part of the original bid set specifications and can be accessed via the Construction Administration website: http://www.valleywater.org/Programs/Construction.aspx
Question 13	There may be a typo on Bid Item No. 7. Is the quantity supposed to be 21,000 lbs?
Response 13	The quantity is 2,100 lbs and has been updated in ATTACHMENT 1 of this Addendum No. 2.
Question 14	Will any repairs needed from the removal of "overpoured concrete adhered to bottom slab" mentioned under Section 29-1 be paid for under the bid items, or paid as an "extra work change order", or will those repairs be considered "incidental" to the project?
Response 14	No repairs are expected, however if any repairs are required they will be paid using the unit cost values for concrete repair.

THIS ADDENDUM NO. 2, WHICH CONTAINS 9 PAGES AND 1 ATTACHMENT, IS ATTACHED TO AND IS A PART OF THE SPECIFICATIONS AND CONTRACT DOCUMENTS FOR THIS PROJECT.

N. Nguyen _____ Date: 6/21/2017

Ngoc Nguyen, P.E.
Interim Deputy Operating Officer
Watersheds Design and Construction Division

Enclosure:
ATTACHMENT 1: BID FORM NO. 1 (REV 1) Proposal Form and Bid Items

This page intentionally left blank.

ATTACHMENT 1:

BID FORM NO. 1 (REV 1) Proposal Form and Bid Items

This page intentionally left blank.

Proposal and Bid Items

*This form must be completed in **ink** and changes must be **initialed**.*

Honorable Board of Directors
Santa Clara Valley Water District (District)

Pursuant to, and in compliance with, the Notice to Bidders and the Contract Documents, relating to the **PALO ALTO FLOOD BASIN TIDE GATE STRUCTURE IMPROVEMENTS PROJECT**, the undersigned Bidder having become thoroughly familiar with the terms and conditions of the Contract Documents and with local conditions affecting the performance and costs of the Work and having fully inspected the Work site in all particulars, hereby proposes and agrees to fully perform the Work, including providing any and all labor and materials and performing all Work required to construct and complete said Work within the contract time stated and in accordance with the requirements of the Contract Documents, for the following sum of money.

The undersigned Bidder agrees to complete all the Work within **120** calendar days from the first chargeable day of the Contract, as stated in the Notice to Begin Work. The Bidder agrees to enter into a Contract with the District and provide the required bonds and insurance in accordance with the Instructions to Bidders, Contract Bonds, paragraph #21 and Execution of Contract, paragraph #22. If the Bidder fails to meet these requirements within the time specified in the Instruction to Bidders, Failure to Execute Contract, paragraph #23, the Bidder's security accompanying this Proposal may be forfeited and become the property of the District. No Contract exists until all Contract bonds and insurance documents have been accepted by the District.

TOTAL BID: $ _____

Bidder acknowledges receipt of the following Addenda to the Bid Documents:
Addenda are posted online at www.valleywater.org/Programs/Construction.aspx.

☐ **NO** Addenda received

☐ Addenda received as follows:

Addendum No. _____ Date _____ Addendum No. _____ Date _____
Addendum No. _____ Date _____ Addendum No. _____ Date _____

Failure to acknowledge receipt of an Addendum on the Bid Form is not, in itself, cause for withdrawal or rejection of Bid, if it can be established that Bidder did, in fact, receive such Addendum prior to Bid opening.

The undersigned Bidder has read and, understands, and will comply with, each and all of the requirements specified in these Bid Documents. This Proposal must be signed by an authorized representative of the Bidder with the authority to bind the Bidder.

BIDDER'S COMPANY INFORMATION	
NAME:	ADDRESS:
CONTRACTOR'S CALIFORNIA LICENSE NUMBER: DATE OF EXPIRATION: LICENSE CLASSIFICATION(S):	
PHONE NO.: **( )**	FAX NO.: **( )**
EMAIL ADDRESS:	

SIGNATURE BLOCK (Signature Block must be completed in *ink* and changes must be *initialed*.)	
Bidder's Signature:	Date:
Bidder's Name and Title (Print):	

*This form must be completed in **ink** and changes must be **initialed**.*

ITEM NO.	DESCRIPTION OF ITEM	APPROXIMATE QUANTITY / UNIT	UNIT PRICE	TOTAL
1	Mobilization	Lump Sum / Lump Sum		
2	Dewatering cells	8 / Each		
3	Repair spalled concrete (deck)	200 / Square Feet		
4	**Polyester concrete overlay**	**1,596 / Square Feet**		
5	Epoxy crack injection	200 / Linear Feet		
6	Repair spalled concrete (cells)	400 / Square Feet		
7	**Remove concrete waste**	**2,100 / LBS**		
8	Chain link railing	237 / Linear Feet		
9	Aggregate base	2 / Cubic Yards		

*This form must be completed in **ink** and changes must be **initialed**.*

ITEM NO.	DESCRIPTION OF ITEM	APPROXIMATE QUANTITY / UNIT	UNIT PRICE	TOTAL
10	Steel structures	Lump Sum / Lump Sum		
~~11~~	~~**Compliance with SMP Permits**~~ **NOT USED**			
		TOTAL BID		

CAPITAL PROGRAM SERVICES
5750 ALMADEN EXPRESSWAY
SAN JOSE, CA 95118-3686
TELEPHONE (408) 630-3088
FACSIMILE (408) 979-5631
www.valleywater.org
scvwdplanroom@valleywater.org

Notification of this Addendum is transmitted via email to all current plan holders.
This Addendum is posted on the District website at
www.valleywater.org/Programs/Construction.aspx.

June 23, 2017

ADDENDUM NO. 3
TO CONTRACT DOCUMENTS FOR THE
PALO ALTO FLOOD BASIN TIDE GATE STRUCTURE IMPROVEMENTS PROJECT
Project No. 10394001 Contract No. C0630

Notice is hereby given to Prospective Bidders that the Contract Documents are modified as hereinafter set forth.

BID DOCUMENTS

REPLACE BID FORM NO. 1 (REV 1) Proposal Form and Bid Items with BID FORM NO. 1 (REV 2) Proposal Form and Bid Items **(ATTACHMENT 1)**

SPECIFICATIONS AND CONTRACT DOCUMENTS

TABLE OF CONTENTS

REPLACE title of **SECTION 32. STEEL STRUCTURES** with:

"SECTION 32. METAL STRUCTURES"

TECHNICAL PROVISIONS

REPLACE SECTION 32. STEEL STRUCTURES in its entirety with revised SECTION 32. METAL STRUCTURES **(ATTACHMENT 2)**

DRAWINGS

Sheet S-13:

REPLACE Sheet S-13 with revised Sheet S-13 **(ATTACHMENT 3)**

Sheet S-14:

REPLACE Sheet S-14 with revised Sheet S-14 **(ATTACHMENT 3)**

Sheet S-15:

REPLACE Sheet S-15 with revised Sheet S-15 **(ATTACHMENT 3)**

GENERAL QUESTIONS & RESPONSE

Question 15	Our steel fabricators are concerned that the galvanizing of the new steel bulkheads quite possibly will warp the structure out of its specified tolerances. They suggest either powder coating or stainless steel. I don't think powder coating would hold up. Any chance of changing the requirements to stainless steel?
Response 15	Please see revisions to drawings S-13 thru S-15 as well as revisions to Specification SECTION 32. METAL STRUCTURES in this Addendum No. 3.

THIS ADDENDUM NO. 3, WHICH CONTAINS 2 PAGES AND 3 ATTACHMENTS, IS ATTACHED TO AND IS A PART OF THE SPECIFICATIONS AND CONTRACT DOCUMENTS FOR THIS PROJECT.

N. Nguyen Date: 6/23/2017

Ngoc Nguyen, P.E.
Interim Deputy Operating Officer
Watersheds Design and Construction Division

Enclosure:
ATTACHMENT 1: BID FORM NO. 1 (REV 2) Proposal Form and Bid Items
ATTACHMENT 2: Revised SECTION 32. METAL STRUCTURES
ATTACHMENT 3: Revised Drawing Sheets: S-13, S-14, and S-15

PALO ALTO FLOOD BASIN TIDE GATE STRUCTURE IMPROVEMENTS PROJECT

ADDENDUM NO. 3

ATTACHMENT 1:

BID FORM NO. 1 (REV 2) Proposal Form and Bid Items

This page intentionally left blank.

Proposal and Bid Items

*This form must be completed in **ink** and changes must be **initialed**.*

Honorable Board of Directors
Santa Clara Valley Water District (District)

Pursuant to, and in compliance with, the Notice to Bidders and the Contract Documents, relating to the **PALO ALTO FLOOD BASIN TIDE GATE STRUCTURE IMPROVEMENTS PROJECT**, the undersigned Bidder having become thoroughly familiar with the terms and conditions of the Contract Documents and with local conditions affecting the performance and costs of the Work and having fully inspected the Work site in all particulars, hereby proposes and agrees to fully perform the Work, including providing any and all labor and materials and performing all Work required to construct and complete said Work within the contract time stated and in accordance with the requirements of the Contract Documents, for the following sum of money.

The undersigned Bidder agrees to complete all the Work within **120** calendar days from the first chargeable day of the Contract, as stated in the Notice to Begin Work. The Bidder agrees to enter into a Contract with the District and provide the required bonds and insurance in accordance with the Instructions to Bidders, Contract Bonds, paragraph #21 and Execution of Contract, paragraph #22. If the Bidder fails to meet these requirements within the time specified in the Instruction to Bidders, Failure to Execute Contract, paragraph #23, the Bidder's security accompanying this Proposal may be forfeited and become the property of the District. No Contract exists until all Contract bonds and insurance documents have been accepted by the District.

TOTAL BID: $ _____

Bidder acknowledges receipt of the following Addenda to the Bid Documents:
Addenda are posted online at www.valleywater.org/Programs/Construction.aspx.

☐ **NO** Addenda received

☐ Addenda received as follows:

Addendum No. _____ Date _____ Addendum No. _____ Date _____
Addendum No. _____ Date _____ Addendum No. _____ Date _____

Failure to acknowledge receipt of an Addendum on the Bid Form is not, in itself, cause for withdrawal or rejection of Bid, if it can be established that Bidder did, in fact, receive such Addendum prior to Bid opening.

The undersigned Bidder has read and, understands, and will comply with, each and all of the requirements specified in these Bid Documents. This Proposal must be signed by an authorized representative of the Bidder with the authority to bind the Bidder.

BIDDER'S COMPANY INFORMATION	
NAME:	ADDRESS:
CONTRACTOR'S CALIFORNIA LICENSE NUMBER: DATE OF EXPIRATION: LICENSE CLASSIFICATION(S):	
PHONE NO.: **( )**	FAX NO.: **( )**
EMAIL ADDRESS:	

SIGNATURE BLOCK (Signature Block must be completed in *ink* and changes must be *initialed*.)	
Bidder's Signature:	Date:
Bidder's Name and Title (Print):	

Proposal and Bid Items

*This form must be completed in **ink** and changes must be **initialed**.*

ITEM NO.	DESCRIPTION OF ITEM	APPROXIMATE QUANTITY / UNIT	UNIT PRICE	TOTAL
1	Mobilization	Lump Sum / Lump Sum		
2	Dewatering cells	8 / Each		
3	Repair spalled concrete (deck)	200 / Square Feet		
4	Polyester concrete overlay	1,596 / Square Feet		
5	Epoxy crack injection	200 / Linear Feet		
6	Repair spalled concrete (cells)	400 / Square Feet		
7	Remove concrete waste	2,100 / LBS		
8	Chain link railing	237 / Linear Feet		
9	Aggregate base	2 / Cubic Yards		

*This form must be completed in **ink** and changes must be **initialed**.*

ITEM NO.	DESCRIPTION OF ITEM	APPROXIMATE QUANTITY / UNIT	UNIT PRICE	TOTAL
10	**Metal Structures**	Lump Sum / Lump Sum		
		TOTAL BID		

This page intentionally left blank.

PALO ALTO FLOOD BASIN TIDE GATE STRUCTURE IMPROVEMENTS PROJECT

ADDENDUM NO. 3

ATTACHMENT 2:

Revised SECTION 32. METAL STRUCTURES

This page intentionally left blank.

SECTION 32: METAL STRUCTURES

32.01. Metal Structures

A. This section includes specifications for furnishing and installing metal items.

32.02. Scope of Work

A. The Contractor shall provide two new bulkheads as shown on the Drawings.

B. The Contractor shall modify the two existing steel bulkheads as shown on the Drawings.

C. The Contractor shall retrofit the 8 cells on the bay side of the tide gate with angles as shown on the Drawings, to provide support for the metal bulkheads.

32.03. Materials

A. The new bulkheads shall be fabricated from either of the following materials:

1. Stainless steel type 304 meeting the requirements of ASTM A304.

2. Aluminum meeting the requirements of ASTM B209.

B. The angles connected to the concrete walls shall be aluminum.

C. The threaded rods and lifting lugs shall be 316 stainless steel.

32.04. Shop Drawings

A. Submit shop drawings in accordance with Section 7.04, for the new bulkheads and for the retrofitted bulkheads.

32.05. Quality Control

A. Welding must be per the American Welding Society codes as follows:

1. Welding of stainless steel per AWS D1.6

2. Welding of aluminum per AWS D1.2

32.06. Tolerances

A. Field placement of aluminum angles shall be +/- 1/16" vertical (looking at the concrete wall) and be perpendicular to the concrete wall within 1/16".

B. Distance between aluminum angles: + 1/16", - 0"

C. Shop fabrication of the new bulkheads:

1. Shall lay flat after all fabrication is complete

2. The thickness of the bulkhead along the 6'-2" dimension: +/- 1/16"

32.07. Payment

A. Full compensation for furnishing all labor, materials, tools, equipment, and incidentals and for doing all work required for providing two new bulkheads, providing modifications for the two existing steel bulkheads, and providing and installing the angles in each of the cells as shown on the Drawings, as specified in these Technical Provisions, and as directed by the Engineer, shall be included in the lump sum price bid for METAL STRUCTURES, Bid Item No. 10.

PALO ALTO FLOOD BASIN TIDE GATE STRUCTURE IMPROVEMENTS PROJECT

ADDENDUM NO. 3

ATTACHMENT 3:

Revised Drawing Sheets

S-13, S-14, and S-15

This page intentionally left blank.

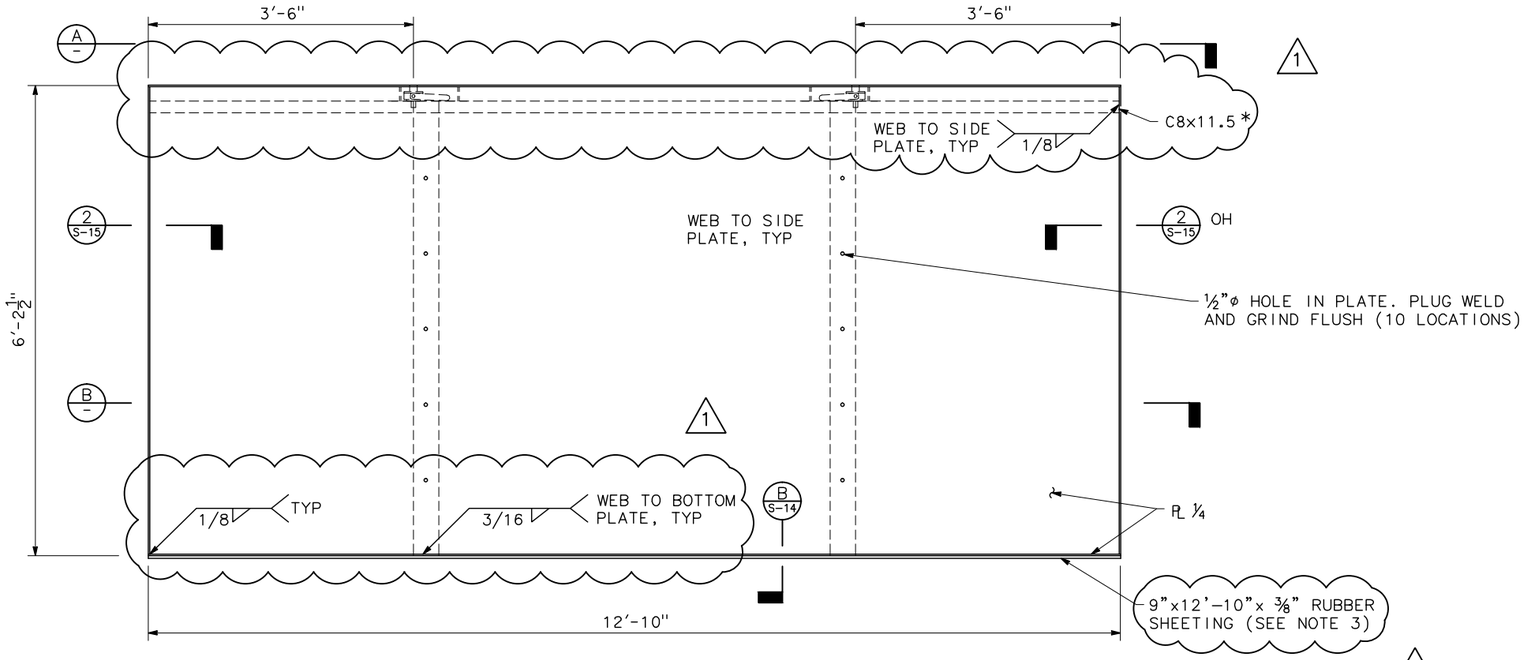

PLAN

NOTES:

1. ALL MATERIAL SHALL BE EITHER ALUMINUM OR STAINLESS STEEL. STRUCTURAL SHAPES CAN BE FABRICATED OUT OF PLATE.
2. FABRICATE 2 BULKHEADS AS SHOWN.
3. RUBBER SHEETING SHALL BE ATTACHED WITH 1/4"ø STAINLESS STEEL RIVETS WITH 5/8"ø (MIN) WASHER AT 12" O.C.
4. LIFTING LUGS SHALL BE CROSBY STAINLESS STEEL NO. 1065048 WITH 3500# LIFTING CAPACITY, OR EQUAL
5. CUT 2"ø HOLES IN TOP AND BOTTOM PLATE, AND C8x11.5

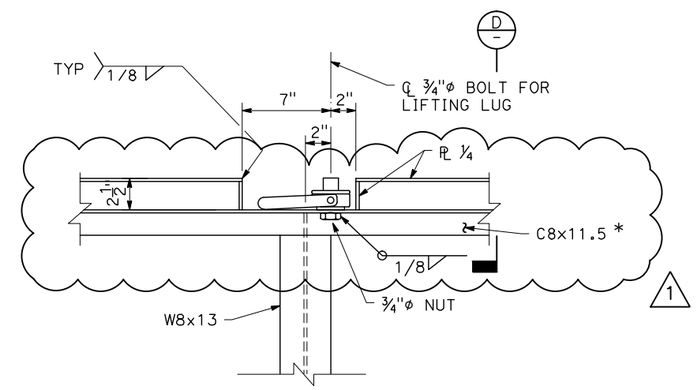

C DETAIL

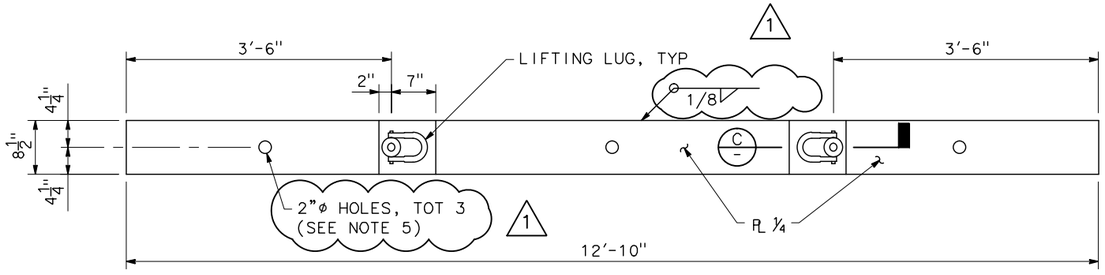

A TOP VIEW

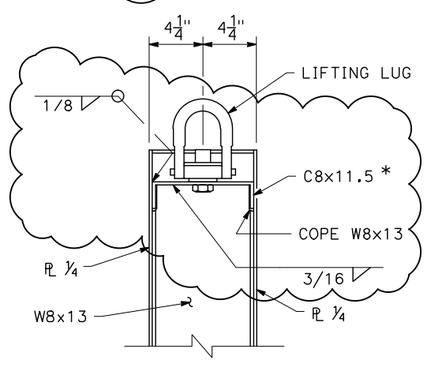

D DETAIL

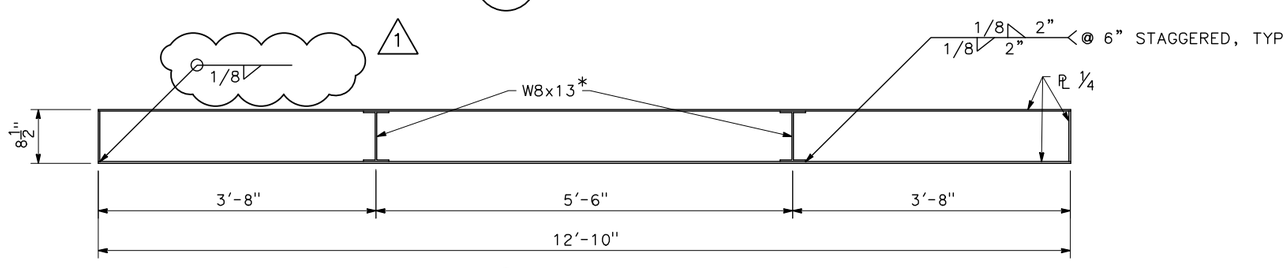

B SECTION

* NOTE: THE WEIGHT OF STRUCTURAL SHAPES ARE FOR STEEL. ALUMINUM SHAPES WILL WEIGHT LESS PER FOOT.

REV	DESCRIPTION	DATE	APPR.	REFERENCE INFORMATION AND NOTES
1	BULKHEAD CHANGES	6/17	MB	

MARK THOMAS
2290 NORTH FIRST STREET, SUITE 304
SAN JOSE, CA 95131

DATE 5-5-17
DESIGN MB
DRAWN AM
CHECKED VS

REGISTERED PROFESSIONAL ENGINEER MICHAEL W. BIANUCCI No. C52085 Exp. 12/31/18 CIVIL STATE OF CALIFORNIA
PROJECT ENGINEER 5/17/17

Santa Clara Valley Water District
ACCEPTED BY DISTRICT
SAEID HOSSEINI, P.E. 5-17-2017

PROJECT NAME AND SHEET DESCRIPTION:

PALO ALTO FLOOD BASIN TIDE GATE STRUCTURE IMPROVEMENTS PROJECT

New Steel Bulkheads

SCALE: AS SHOWN
VERIFY SCALES: 0 1" BAR IS ONE INCH ON ORIGINAL DRAWING IF NOT ONE INCH ON THIS SHEET ADJUST SCALES ACCORDINGLY
PROJECT NUMBER: 10394001
SHEET CODE: S-13
PAGE NUMBER: 17 OF 20

DOCUMENT NUMBER: CAD_XX-X-XXXX-XXXXX
USERNAME: gboyko Thu 22 Jun 2017 03:28pm
FILENAME: J:\SCVWD-SJ-16106-Palo Alto Flood Gate Rehab\CADD\Structures\Sheets\SJ-16106 G01 G02 C01 S01-S16

NOTES:

1. TWO EXISTING BULKHEADS TO BE MODIFIED AS SHOWN ON THIS SHEET AND S-15.
2. GRIND SURFACE SMOOTH AFTER REMOVAL OF TUBES. PAINT SIDE SURFACES WITH 2 COATS OF COLD GALVANIZING PAINT.
3. RUBBER SHEETING SHALL BE ATTACHED WITH 1/4"ø STAINLESS STEEL RIVETS WITH 5/8"ø (MIN) WASHER AT 12" O.C.
4. CUT 2"ø HOLES IN TOP AND BOTTOM PLATE, AND C8x11.5

1

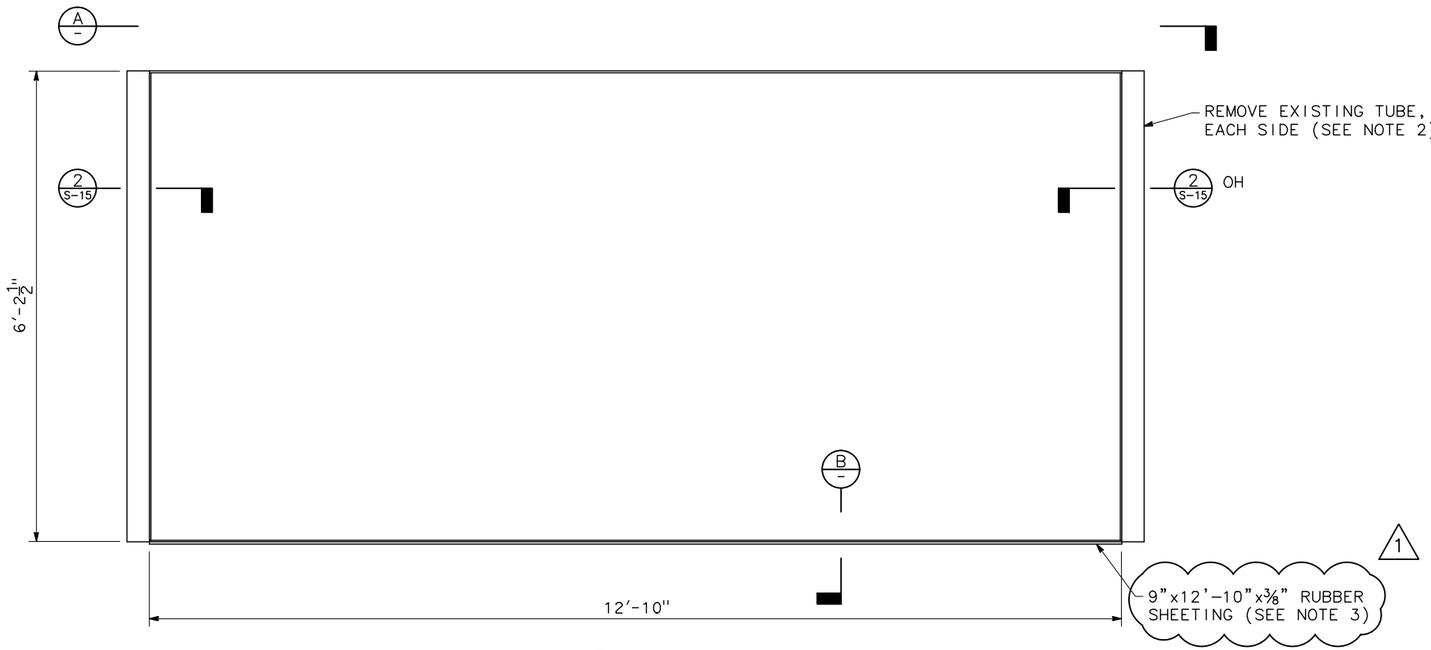

PLAN

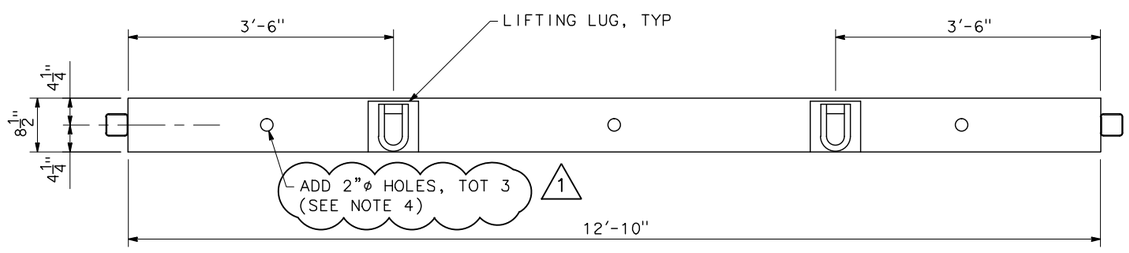

A TOP VIEW

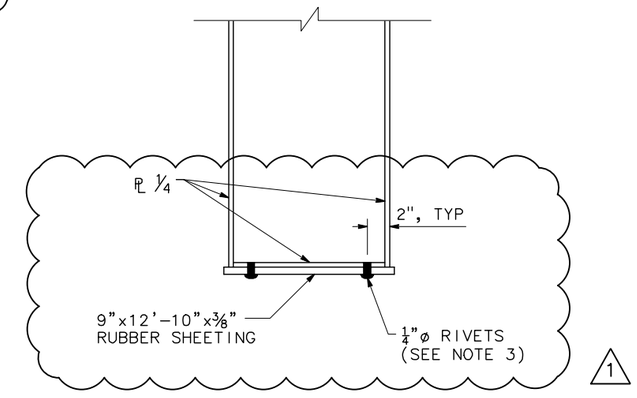

B SECTION

REV	DESCRIPTION	DATE	APPR.	REFERENCE INFORMATION AND NOTES
1	BULKHEAD CHANGES	6/17	MB	

MARK THOMAS
2290 NORTH FIRST STREET, SUITE 304
SAN JOSE, CA 95131

DATE	5-5-17
DESIGN	MB
DRAWN	AM
CHECKED	VS

REGISTERED PROFESSIONAL ENGINEER
MICHAEL W. BIANUCCI
No. C52085
Exp. 12/31/18
CIVIL
STATE OF CALIFORNIA
PROJECT ENGINEER 5/17/17

Santa Clara Valley Water District

ACCEPTED BY DISTRICT

SAEID HOSSEINI, P.E. 5-17-2017

PROJECT NAME AND SHEET DESCRIPTION:

PALO ALTO FLOOD BASIN TIDE GATE STRUCTURE IMPROVEMENTS PROJECT

Existing Steel Bulkheads

SCALE	PROJECT NUMBER
AS SHOWN	10394001
VERIFY SCALES 0 1" BAR IS ONE INCH ON ORIGINAL DRAWING IF NOT ONE INCH, ON THIS SHEET ADJUST SCALES ACCORDINGLY	SHEET CODE: S-14
	PAGE NUMBER: 18 OF 20

DOCUMENT NUMBER: CAD_XX-X-XXXX-XXXXX

USERNAME: gboyko Thu 22 Jun 2017 03:28pm
FILENAME: J:\SCVWD-SJ-16106-Palo Alto Flood Gate Rehab\CADD\Structures\Sheets\SJ-16106 G01 G02 C01 S01-S16

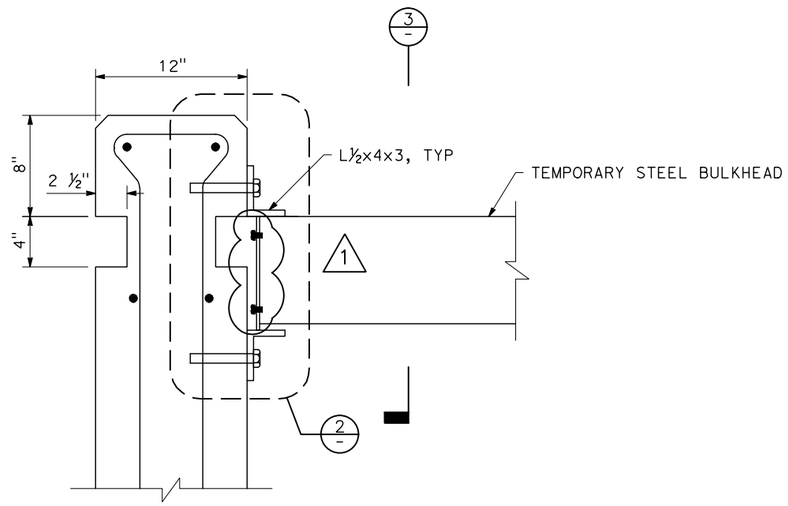

1 DETAIL
1/2" = 1'-0"

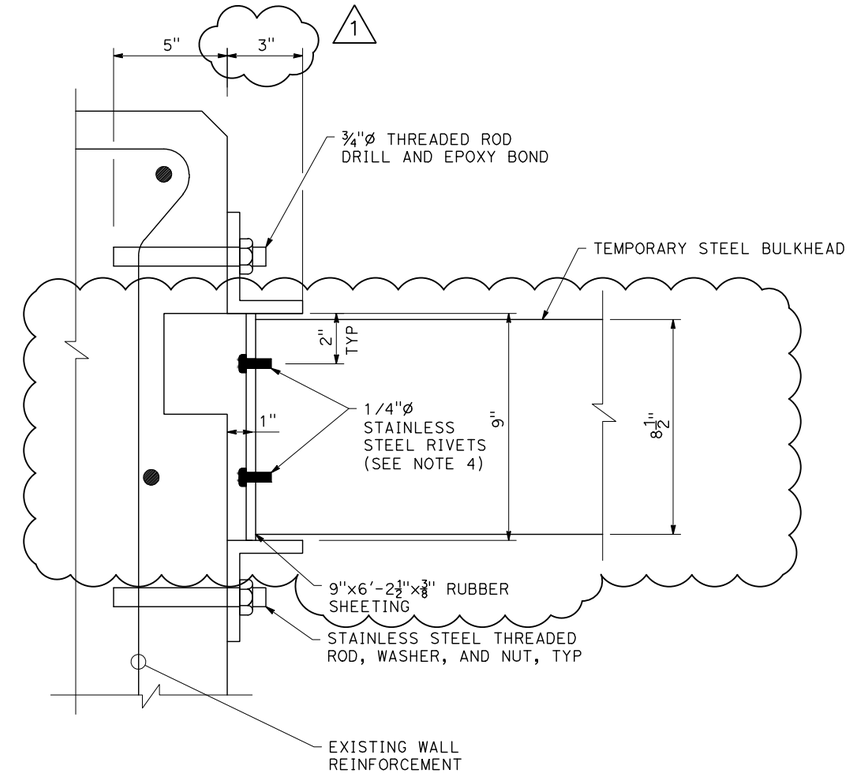

2 DETAIL
NO SCALE

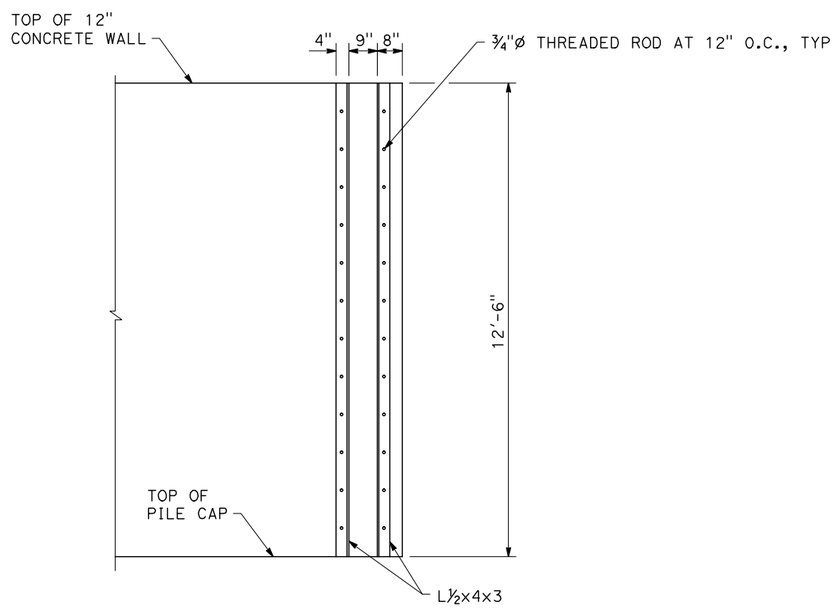

3 ELEVATION
1/2" = 1'-0"

1

NOTES:

1. ANGLES SHALL BE ALUMINUM.
2. THREADED RODS SHALL BE STAINLESS STEEL.
3. EPOXY SHALL BE HIT-RE100 BY HILTI OR SET XP BY SIMPSON STRONG TIE.
4. RUBBER SHEETING SHALL BE ATTACHED WITH 1/4"ø STAINLESS STEEL RIVETS WITH 5/8"ø (MIN) WASHER AT 12" O.C.

1

REV	DESCRIPTION	DATE	APPR.	REFERENCE INFORMATION AND NOTES
1	BULKHEAD CHANGES	6/17	MB	

MARK THOMAS
2290 NORTH FIRST STREET, SUITE 304
SAN JOSE, CA 95131

DATE 5-5-17
DESIGN MB
DRAWN AM
CHECKED VS

REGISTERED PROFESSIONAL ENGINEER
MICHAEL W. BIANUCCI
No. C52085
Exp. 12/31/18
CIVIL
STATE OF CALIFORNIA

PROJECT ENGINEER 5/17/17

Santa Clara Valley Water District

ACCEPTED BY DISTRICT

SAEID HOSSEINI, P.E. 5-17-2017

PROJECT NAME AND SHEET DESCRIPTION:

PALO ALTO FLOOD BASIN TIDE GATE STRUCTURE IMPROVEMENTS PROJECT

Bulkhead Details

SCALE: AS SHOWN
VERIFY SCALES: 0 — 1" BAR IS ONE INCH ON ORIGINAL DRAWING IF NOT ONE INCH ON THIS SHEET ADJUST SCALES ACCORDINGLY

PROJECT NUMBER: 10394001
SHEET CODE: S-15
PAGE NUMBER: 19 OF 20

DOCUMENT NUMBER: CAD_XX-X-XXXX-XXXXX

USERNAME: gboyko Thu 22 Jun 2017 03:29pm
FILENAME: J:\SCVWD-SJ-16106-Palo Alto Flood Gate Rehab\CADD\Structures\Sheets\SJ-16106 G01 G02 C01 S01-S16

THIS PAGE INTENTIONALLY LEFT BLANK

Santa Clara Valley Water District

File No.: 17-0531

Agenda Date: 8/8/2017
Item No.: *3.4.

BOARD AGENDA MEMORANDUM

SUBJECT:
CEO Bulletins for the Weeks of July 21-27, and July 28 through August 3, 2017.

RECOMMENDATION:
Accept the CEO Bulletins.

SUMMARY:
The CEO Bulletin is a weekly communication for the CEO, to the Board of Directors, assuring compliance with Executive Limitations Policy EL-7: The BAOs inform and support the Board in its work. Further, a BAO shall: Inform the Board of relevant trends, anticipated adverse media coverage, or material external and internal changes, particularly changes in the assumptions upon which any Board policy has previously been established. Report in a timely manner an actual or anticipated noncompliance with any policy of the Board.

CEO Bulletins are produced and distributed to the Board weekly as informational items, and then placed on the bimonthly, regular Board meeting agendas to allow opportunity for Board discussion on any of the matters contained therein.

FINANCIAL IMPACT:
There is no financial impact associated with this item.

CEQA:
The recommended action does not constitute a project under CEQA because it does not have a potential for resulting in direct or reasonably foreseeable indirect physical change in the environment.

ATTACHMENTS:
Attachment 1: 072717 CEO Bulletin
*Attachment 2: 080317 CEO Bulletin

UNCLASSIFIED MANAGER:

Norma Camacho, 408-630-2084

CEO BULLETIN

Santa Clara Valley Water District

To: Board of Directors
From: Norma J. Camacho, Interim CEO

Chief Executive Officer Bulletin
Week of July 21 – 27, 2017

Board Executive Limitation Policy EL-7:
The Board Appointed Officers shall inform and support the Board in its work. Further, a BAO shall 1) inform the Board of relevant trends, anticipated adverse media coverage, or material external and internal changes, particularly changes in the assumptions upon which any Board policy has previously been established and 2) report in a timely manner an actual or anticipated noncompliance with any policy of the Board.

Page	IN THIS ISSUE
1	**Treated Water Contract Reduction**
2	**Water district and City of San Jose Amend Partnership Agreement to Fund Downtown Streets Team's Efforts to Reduce Toxins and Pollutants in Local Waterways**

Treated Water Contract Reduction

In the last four years, the water district board responded to the state's historic drought and local conditions by adopting resolutions calling on water retailers, local municipalities, and the County of Santa Clara to implement measures to achieve water use reduction targets set by the board.

In June 2017, the board adopted the latest resolution calling on the community to make water conservation a way of life and voluntarily achieve a 20 percent reduction in water use, compared to 2013.

The following water use reduction resolutions were adopted by the board since 2014:

1. 2014: Resolution 14-93 called for a 20 percent water use reduction compared to 2013 usage.
2. 2015: Resolution 15-24 called for a 30 percent water use reduction and Resolution 15-70 continued the 30 percent water use reduction.
3. 2016: Resolution 16-55 called for a 20 percent water use reduction.
4. 2017: Resolution 17-08 called for a 20 percent water use reduction and Resolution 17-43 calls for conservation as a way of life including voluntarily achieve a 20 percent reduction in water use.

The water district contracts with seven water retailers to receive treated water. One provision in the contracts establishes minimum payments from water retailers, equivalent to 90 percent of the water retailers' approved contract delivery schedules.

When the water district board adopts a water reduction program by resolution, the water retailers'

contract delivery schedules are reduced by the reduction percentage, less 10 percent. The intent of this provision is to prevent triggering minimum payments for water retailers when the water retailers and community respond to the board's call for water use reduction.

The water district has been implementing contract schedule reductions in accordance with board resolutions, including the latest call for the community to achieve a 20 percent reduction in water use, compared to 2013. Water retailer contract schedules were reduced by 20 percent in 2015 and 10 percent since 2016, and with Resolution 17-43, retailer contract schedules will continue to be reduced by 10 percent.

For further information, please contact Angela Cheung at (408) 630-2735.

Water district and City of San Jose Amend Partnership Agreement to Fund Downtown Streets Team's Efforts to Reduce Toxins and Pollutants in Local Waterways

On June 30, 2017, the water district and the City of San José (city) amended an existing Safe, Clean Water and Natural Flood Protection Priority B3 partnership funding agreement (agreement) to extend the term of the agreement, increase the funding amount, and expand the scope of work.

The agreement, initially executed on August 24, 2015, and set to expire on June 30, 2017, was initiated to reduce toxins, hazards and contaminants in local waterways. The agreement provided for $196,250 in funding from the water district coupled with support from the city, in the amount of $193,750, to be used primarily for creek and creek bank cleanups by three sub-grantees that use volunteers to remove trash along and in local waterways.

Subsequently, during the board's the November 22, 2016, meeting, the board approved providing $350,000 funding for a partnership agreement between the water district and the city to fund Downtown Streets Team's efforts to provide homeless persons along creeks opportunities to perform creek cleanups and to conduct outreach related to trash removal from creeks and impact of trash in local waterways. Furthermore, the board authorized the Interim Chief Executive Officer (ICEO) to negotiate and come back to the board with the cost-share partnership with the city.

Since the water district and the city already had a partnership agreement in place, both agencies decided to negotiate and amend the existing agreement to add the following:

1. $350,000 in water district funding to increase the total contribution from $196,250 to $546,250;
2. $350,000 in city funding to increase the total contribution from $193,750 to $543,750; and
3. Downtown Street Team, as a sub-consultant, to carry out creek cleanups and provide workforce experience to individuals encamped along local waterways.

By late May, the water district and city negotiated the terms of the agreement and with insufficient time to return to the board by the agreement's June 30, 2017, expiration, the amendment was carried out under the ICEO's authority.

For further information, please contact Norma Camacho at (408) 630-2084.

CEO BULLETIN

Santa Clara Valley Water District

To: Board of Directors
From: Norma J. Camacho, Interim CEO

Chief Executive Officer Bulletin
Week of July 28 – August 3, 2017

Board Executive Limitation Policy EL-7:
The Board Appointed Officers shall inform and support the Board in its work. Further, a BAO shall 1) inform the Board of relevant trends, anticipated adverse media coverage, or material external and internal changes, particularly changes in the assumptions upon which any Board policy has previously been established and 2) report in a timely manner an actual or anticipated noncompliance with any policy of the Board.

Page	IN THIS ISSUE
1	**Grassroots Ecology/Acterra completes the Foothills Park Riparian Enhancement Grant Project**

Grassroots Ecology/Acterra completes the Foothills Park Riparian Enhancement Grant Project

Grassroots Ecology (formerly Acterra Stewardship), a recipient of the water district's FY2014 Safe, Clean Water and Natural Flood Protection grant, has completed its grant project. Grassroots Ecology, a non-profit organization, received $126,300 to monitor, restore, and enrich wildlife habitat along four miles of riparian corridor in the Upper San Francisquito Watershed, including Los Trancos Creek and Buckeye Creek.

The project began on August 1, 2014, and was completed on June 30, 2017. Key accomplishments of the project are:

- Four miles of creek monitored
- Four miles of creekside vegetation surveyed
- Increased native plant species richness with 1,025 native plants installed
- Decreased invasive plant populations with 2,755 linear feet of invasive plants removed
- More than 1,300 community members engaged in clearing invasive plants; growing, planting, and caring for native plants; and monitoring creek sediment levels.

The grantee's final report on the completed project is included in the board's August 4, 2017, Non-Agenda package.

For further information, please contact Norma Camacho at (408) 630-2084.

Santa Clara Valley Water District

File No.: 17-0524

Agenda Date: 8/8/2017
Item No.: *3.5.

BOARD AGENDA MEMORANDUM

SUBJECT:
Approval of Minutes.

RECOMMENDATION:
Approve the minutes.

SUMMARY:
In accordance with the Ralph M. Brown Act, a summary of Board discussions, and details of all actions taken by the Board, during all open and public Board of Directors meetings, is transcribed and submitted to the Board for review and approval.

Upon Board approval, minutes transcripts are finalized and entered into the District's historical records archives and serve as historical records of the Board's meetings.

FINANCIAL IMPACT:
There is no financial impact associated with this item.

CEQA:
The recommended action does not constitute a project under CEQA because it does not have a potential for resulting in direct or reasonably foreseeable indirect physical change in the environment.

ATTACHMENTS:
Attachment 1: 071117 Closed Session & Regular Minutes

UNCLASSIFIED MANAGER:
Michele King, 408-630-2711

BOARD OF DIRECTORS MEETING

MINUTES

CLOSED SESSION & REGULAR MEETING
TUESDAY, JULY 11, 2017
11:30 AM

(Paragraph numbers coincide with agenda item numbers)

1. CALL TO ORDER:

A Closed Session and Regular Meeting of the Santa Clara Valley Water District Board of Directors was called to order on July 11, 2017, in the District Headquarter Building Boardroom, 5700 Almaden Expressway, San Jose, California, at 11:30 a.m.

1.1. Roll Call.

Board members in attendance were Gary Kremen, Linda J. LeZotte, Barbara Keegan, Richard Santos, John L. Varela, and Nai Hsueh, constituting a quorum of the Board.

Director Estremera arrived as noted below.

Staff members in attendance were N. Camacho, Interim Chief Executive Officer (Interim CEO), S. Yamamoto, District Counsel, M. King, Clerk/Board of Directors, J. Aranda, K. Arends, R. Callender, R. Chan, A. Fulcher, V. Gin, G. Hall, B. Hopper, N. Nguyen, K. Oven, G. De La Piedra, M. Richardson, and E. Soderlund. Chief Financial Officer D. Taylor represented Chief Operating Officer, Administrative Services S. Stanton.

2. TIME CERTAIN:

Chairperson Varela announced that the Board would adjourn to Closed Session for consideration of Items 2.1, 2.2, and 2.3.

Director Estremera arrived.

Upon return to Open Session the same Board members, including Director Estremera, and staff were present.

11:30 AM

2.1. CLOSED SESSION
CONFERENCE WITH LEGAL COUNSEL
Initiation of litigation
Pursuant to Government Code Section 54956.9(d)(4) - 2 Cases

2.2. CLOSED SESSION
CONFERENCE WITH LEGAL COUNSEL
Pending litigation pursuant to Government Code Section 54956(d)(1)
Santa Clara Valley Water District v. San Francisco Bay Regional Water Quality Control Board

2.3. CLOSED SESSION
LIABILITY CLAIMS
Pursuant to Government Code Section 54956 (e) (3)
Receipt of Claims
Claimants: Dulce Mata and Saul Guzman, Juanita Wilson, Sang Trang, Amanda Wilson Griselda & Paulino Madrigal, Jolene Noel, Gordon Smith & Roma Smith, Rob & Rene Souza claimed against: District

1:00 PM

2.4. District Counsel Report.

Ms. Rita Chan, Assistant District Counsel and Mr. Stan Yamamoto, District Counsel, reported that the Board met in Closed Session on Items 2.1, 2.2, and 2.3 with all members present, and gave direction to staff.

2.5. Pledge of Allegiance/National Anthem.

Director Estremera led all present in reciting the Pledge of Allegiance.

2.6. Orders of the Day.

Chairperson Varela confirmed that Item 3.3 would be continued to the July 25, 2017 meeting.

2.7. Time Open for Public Comment on any Item not on the Agenda.

Mr. Jerry Heinrichs, Santa Clara County Water Ski Club, requested the District consider partnering with the Santa Clara County Department of Parks and Recreation to perform post-President Day Weekend Flood event repairs, and to provide other maintenance activities on the Coyote Creek Percolation ponds. He submitted the attached materials identified as Handout 2.7-A, herein. Copies of the Handout were distributed to the Board and made available to the public.

Director Santos requested that staff investigate the issues raised by Mr. Heinrichs, as contained in Handout 2.7-A.

Ms. Robin Schaut, Santa Clara County Department of Parks and Recreation, expressed appreciation for Mr. Heinrich's comments and expressed support for a continued partnership between the District and the County for maintenance and repair of the Coyote Creek Percolation Ponds.

Ms. Arlene Goetze, No Toxins for Children, expressed opposition to fluoridation of drinking water and submitted the attached materials identified as Handout 2.7-B, herein. Copies of the handout were distributed to the Board and made available to the public.

Mr. Richard McMurtry, Streams for Tomorrow, encouraged the Board to consider joint agency partnerships for invasive plant removal on creeks.

Director Santos reported having received and responded to correspondence from Mr. McMurtry.

2.8. California WaterFix Update.

Recommendation: Receive and discuss information on California WaterFix.

Ms. Cindy Kao, Imported Water Manager, reviewed the information on this item, per the attached Board Agenda Memo, and per the materials contained in Attachment 2.

Three statements expressing support for the California WaterFix were received from: Ms. Lauren Boyd, Silicon Valley Leadership Group; Ms. Jennifer De La Cruz, San Jose Silicon Valley Chamber of Commerce; and Mr. Josue Garcia, San Benito and Santa Clara County Building and Construction Trades Council.

Six statements expressing opposition to the California WaterFix were received from: Mr. Michael Frost, San Carlos resident; Hon. Joan Buchanan, former District 15 Assembly Member and President of Restore the Delta; Mr. Peder Jones, San Francisco resident; Mr. Les Kishler, Los Gatos resident; Ms. Katja Irvin, Sierra Club Loma Prieta Chapter; and Mr. Bob Wallace, San Martin resident.

Additional statements regarding the impact of California WaterFix on tax and rate payers, the need for additional analysis before decision making, reduced reliance on the delta, support for localized water resource projects, delta water purchase in lieu of WaterFix participation, and protection of the environment were received from: Ms. Nora Kovaleski, San Jose resident; Mr. Hunter Reed; Campbell resident and member of San Jose Fly Casters; Mr. Tim Stroshane, Restore the Delta; Mr. Dave Olsen, Palo Alto resident; Mr. Frost; and Ms. Irvin. Mr. Jones submitted the attached materials identified as Handout 2.8-E, herein. Copies of the handout were distributed to the Board and made available to the public.

The Board requested that staff come back with an updated on the Water Supply Master Plan prior to the next California WaterFix update, and include in the next California WaterFix update, the following items: cost per acre foot of WaterFix vs. other water sources; legal analysis on various aspects of WaterFix proposals and statewide water increase projections; and analysis on projected water supplies without District participation in the project.

The Board noted the information, without formal action.

3. CONSENT CALENDAR:

The Board considered Consent Calendar Items 3.1 and 3.2 under one motion.

3.1. Approval of Minutes.

Recommendation: Approve the minutes.

3.2. CEO Bulletins for the Weeks of June 23 - 29, and June 30 through July 6, 2017.

Recommendation: Accept the CEO Bulletins.

Motion: Approve Consent Calendar Items 3.1 and 3.2 under one motion, as follows: Approve the minutes, as contained in Item 3.1; and accept the CEO Bulletins, as contained in Item 3.2.

Move to Approve:	Richard Santos
Second:	Nai Hsueh
Yeas:	Tony Estremera, Gary Kremen, Linda J. LeZotte, Barbara Keegan, Richard Santos, John L. Varela, Nai Hsueh
Nays:	None
Abstains:	None
Recuses:	None
Absent:	None
Summary:	7 Yeas; 0 Nays; 0 Abstains; 0 Absent.

3.3. Report of Bids Received and Award of Construction Contract to Dixon Marine Services Inc.—for Construction of the Palo Alto Flood Basin Tide Gate Structure Improvements Project, Project No. 10394001, Contract No. C0630 (Palo Alto) (District 5).

Recommendation:

A. Ratify Addenda No. 1 through No. 3 to the Contract Documents for the Palo Alto Flood Basin Tide Gate Structure Improvements Project, Project;
B. Waive minor irregularities in Dixon Marine Services Inc. bid;
C. Award the Construction Contract to Dixon Marine Services Inc. in the sum of $579,081.07; and

D. Approve a contingency sum of $60,000 and authorize the Interim Chief Executive Officer or designee to approve individual change orders up to the designated amount.

The Board continued Item 3.3 to the July 25, 2017, regular meeting.

REGULAR AGENDA:

4. BOARD OF DIRECTORS:

4.1. Association of California Water Agencies (ACWA) - Resolution Nominating Director John Varela as Board Member of the Region 5 Board.

Recommendation:	Adopt the Resolution PLACING IN NOMINATION DIRECTOR JOHN L. VARELA AS A MEMBER OF THE ASSOCIATION OF CALIFORNIA WATER AGENCIES (ACWA) REGION 5 BOARD.
Motion:	Adopt Resolution No. 17-48, PLACING IN NOMINATION DIRECTOR JOHN L. VARELA AS A MEMBER OF THE ASSOCIATION OF CALIFORNIA WATER AGENCIES (ACWA) REGION 5 BOARD, by roll call vote.
Move to Adopt:	Tony Estremera
Second:	Gary Kremen
Yeas:	Tony Estremera, Gary Kremen, Linda J. LeZotte, Barbara Keegan, Richard Santos, John L. Varela, Nai Hsueh
Nays:	None
Abstains:	None
Recuses:	None
Absent:	None
Summary:	7 Yeas; 0 Nays; 0 Abstains; 0 Absent.

4.2. Board Committee Reports.

Director Hsueh reported on the July 10, 2017 Capital Improvement Program (CIP) Committee meeting and confirmed that a written summary of the meeting would be provided in the future.

5. WATER UTILITY ENTERPRISE:

5.1. Valley Habitat Agency Request for Partnership Funding under Safe Clean Water Project (SCW) D7 for Acquisition of Lands for Habitat Preservation, Including Potential Opportunities for Securing Lands for a Future Enlarged Pacheco Reservoir.

Recommendation:

A. Receive and discuss information on:
   i. The Valley Habitat Agency (VHA) Second Annual Report and progress to date in fulfillment of Conservation Strategy, including providing mitigation for District activities; and
   ii. The draft criteria for allocation of Safe Clean Water Partnership for the Conservation of Habitat Lands - Project D7; and

B. Authorize the Interim Chief Executive Officer to negotiate a partnership agreement with the VHA to support the acquisition and management of preserve lands to fulfill the long-term conservation goals of the Valley Habitat Plan and to secure lands for a potential enlarged Pacheco Reservoir, which is being evaluated as part of the 2017 Water Supply Master Plan update

Ms. Debra Caldon, Environmental Services Manager, reviewed the information on this item, per the attached Board Agenda Memo.

Move to Authorize:	Tony Estremera
Second:	Gary Kremen
Yeas:	Tony Estremera, Gary Kremen, Linda J. LeZotte, Barbara Keegan, Richard Santos, John L. Varela, Nai Hsueh
Nays:	None
Abstains:	None
Recuses:	None
Absent:	None
Summary:	7 Yeas; 0 Nays; 0 Abstains; 0 Absent.

5.2. Amendment No. 3 to Agreement No. A3902G with HDR Engineering, Inc., for Design Consultant Services for a Not-To-Exceed Fee of $2,681,320, Resulting in a Total Not-To-Exceed Fee of $9,385,209, for Calero Dam Seismic Retrofit Project, Project No. 91874004 (San Jose) (District 1).

Recommendation: Approve Amendment No. 3 to Agreement No. A3902G with HDR Engineering, Inc., for Design Consultant Services for Calero Dam Seismic Retrofit Project for a Not-To-Exceed Fee of $2,681,320, Resulting in a Total Not-To-Exceed Fee of $9,385,209, and extend the Agreement term.

Mr. Bal Ganjoo, Senior Project Manager, reviewed the information on this item, per the attached Board Agenda Memo.

Director Hsueh confirmed that staff had made a presentation on the proposed amendment to the CIP Committee, and expressed support for Board approval of the item.

Move to Approve:	Nai Hsueh
Second:	Tony Estremera
Yeas:	Tony Estremera, Gary Kremen, Linda J. LeZotte, Barbara Keegan, Richard Santos, John L. Varela, Nai Hsueh
Nays:	None
Abstains:	None
Recuses:	None
Absent:	None
Summary:	7 Yeas; 0 Nays; 0 Abstains; 0 Absent.

5.3 San Luis and Delta-Mendota Water Authority July 13, 2017 Board Meeting.

Recommendation:

A. Receive and Discuss Information for the July 13, 2017 San Luis and Delta-Mendota Water Authority (Authority) Board Meeting.

B. Adopt no position on SB 372 (Cannella)—San Joaquin River Exchange Contractors Groundwater Sustainability Agency, as the bill does not directly impact the Santa Clara Valley Water District.

Ms. Vanessa De La Piedra, Groundwater Management Manager, reviewed the information on this item, per the attached Board Agenda Memo.

The Board noted the information without formal action.

6. WATERSHEDS:

6.1. Consultant Agreement with Ghirardelli Associates, Inc. for Construction Management Services for the Watersheds Asset Rehabilitation Program (WARP) for a Not-to-Exceed Amount of $1,226,227, Project No. 62084001, CAS No. 4781 (Gilroy, Milpitas, Mountain View, Santa Clara) (Districts 1, 3, 5, 7).

Recommendation: Approve the Consultant Agreement with Ghirardelli Associates, Inc. (Ghirardelli), for Construction Management (CM) Services for the WARP for a Not-to-Exceed amount $1,226,227.

Mr. Ngoc Nguyen, Deputy Operating Officer, reviewed the information on this item, per the attached Board Agenda Memo.

Director LeZotte requested that staff investigate whether there is a need for additional staffing to handle the construction management-watersheds asset rehabilitation program priorities (Board Member Request No. R-17-0025).

Move to Approve:	Nai Hsueh
Second:	Richard Santos
Yeas:	Tony Estremera, Gary Kremen, Linda J. LeZotte, Barbara Keegan, Richard Santos, John L. Varela, Nai Hsueh
Nays:	None
Abstains:	None
Recuses:	None
Absent:	None
Summary:	7 Yeas; 0 Nays; 0 Abstains; 0 Absent.

7. EXTERNAL AFFAIRS:

None.

8. CHIEF EXECUTIVE OFFICER:

8.1. Chief Executive Officer Report.

Mr. Kurt Arends, Deputy Operating Officer, reported on impacts associated with a power outage at the Pacheco Pumping Plant, and reported that pumps would be returned to operational order by the end of the day.

Mr. Garth Hall, Interim Chief Operating Officer, Water Utility, reported that the Penitencia Water Treatment Plant had been returned to full operation.

Ms. Melanie Richardson, Chief Operating Officer, Watersheds, distributed the attached Stream Maintenance Report identified as Handout 8.1-A herein. Copies of the Handout were distributed to the Board and made available to the public. She also discussed a new smartphone application titled Vizzit, which allowed users to receive information on points of interests on trails.

9. ADMINISTRATION:

None.

10. DISTRICT COUNSEL:

None.

11. ADJOURN:

11.1. Board Member Reports/Announcements.

Director Keegan reported attending the retirement celebration for former Chief Operating Officer Jim Fiedler, and reported participating in a Delta Solutions teleconference and a meeting with a Sub Committee of the Metropolitan Water District.

Director LeZotte reported attending a Recycled and Waste Reduction Commission meeting, the aforementioned retirement luncheon for Jim Fiedler, a staff meeting regarding Lake Almaden, and a CIP Committee meeting.

Director Santos reported attending the aforementioned retirement luncheon for Jim Fiedler, a South County Regional WasteWater Authority (SCRWA) meeting, a Riveroaks Neighborhood Association meeting, and a Penitencia Water Treatment Plant Seismic Retrofit Project public meeting.

Chairperson Varela reported attending a Local Agency Formation Commission of Santa Clara County (LAFCO) briefing, the aforementioned retirement luncheon for Jim Fiedler and SCRWA meeting, an Emerging Leaders Cultural Innovation Lab meeting, a Pajaro River Water Flood Protection Authority meeting, the 4th of July parade in Morgan Hill, a meeting with Assembly Member Anna Caviato, an Agricultural Water Advisory Committee (AWAC) meeting, and various meetings with staff.

Director Estremera reported attending the aforementioned retirement luncheon for Jim Fiedler and CIP Committee meeting.

Director Hsueh reported attending the aforementioned retirement luncheon for Jim Fiedler, CIP Committee meeting, and AWAC meeting; and participating in Chinese radio and community newspapers interviews to promote an Asian community open house at the Silicon Valley Advanced Water Purification Center.

Director Kremen reported participating in the aforementioned Delta Solutions teleconference and a San Francisquito Creek Joint Powers Authority Meeting.

11.2. Clerk Review and Clarification of Board Requests.

Ms. Michele King, Clerk/Board of Directors, read the new Board member request into the record.

11.3. Adjourn to 9:00 a.m. Special Closed Session Meeting on July 18, 2017, in the Santa Clara Valley Water District Headquarters Building Boardroom, 5700 Almaden Expressway, San Jose, California.

Chairperson Varela adjourned the meeting at 2:00 p.m., to the next Special Closed Session Meeting at 8:00 a.m. on July 18, 2017, in the Santa Clara Valley Water District Headquarters Building Boardroom, 5700 Almaden Expressway, San Jose, California.

Michele L. King, CMC
Clerk/Board of Directors

Approved:

Date:

Santa Clara Valley Water District

File No.: 17-0444

Agenda Date: 8/8/2017
Item No.: 4.1.

BOARD AGENDA MEMORANDUM

SUBJECT:
Resolution Setting Time and Place of Regular Meetings of the Santa Clara Valley Water District Board of Directors.

RECOMMENDATION:
A. Discuss current regular Board meeting schedule and identify if the dates and times meet the needs of the Board and public;

B. If the current schedule is adequate, Adopt the RESOLUTION SETTING TIME AND PLACE OF MEETINGS OF THE BOARD OF DIRECTORS OF THE SANTA CLARA VALLEY WATER DISTRICT AND RESCINDING RESOLUTION NO. 17-09; or

C. If revisions to the Board meeting dates and/or times are identified, direct the Clerk of the Board to return with a resolution adopting new schedule.

SUMMARY:
At the February 14, 2017 meeting, the Board adopted Resolution 17-09, Setting Time and Place of Meetings (Attachment 1), effective March 14, 2017, for a trial period concluding in six months (August 2017), as follows:

Second Tuesday of each month beginning at 1:00 p.m.; and
Four Tuesday of each month beginning at 6:00 p.m.

The resolution also allowed for Closed Session, when needed, to be held on regularly scheduled meeting dates, beginning at a time designated by the Clerk of the Board to accommodate discussion of identified subject matter.

The Board has held its regular meetings (11 since the March effective date) in accordance with the meeting schedule. In addition to the regular meetings, the Board has held 13 special meetings to help engage the public.

This item allows the Board to discuss if the one day meeting and one evening meeting schedule meets its needs, and the needs of the public.

FINANCIAL IMPACT:
There is no financial impact associated with this item.

CEQA:
The recommended action is a ministerial action and thus is not subject to the requirements of CEQA.

ATTACHMENTS:
Attachment 1: SCVWD Resolution 17-09
Attachment 2: Proposed Revised Resolution

UNCLASSIFIED MANAGER:
Michele King, 408-630-2711

BOARD OF DIRECTORS
SANTA CLARA VALLEY WATER DISTRICT

RESOLUTION NO. 17-09

SETTING TIME AND PLACE OF MEETINGS OF THE BOARD OF DIRECTORS OF THE SANTA CLARA VALLEY WATER DISTRICT AND RESCINDING RESOLUTION NO. 16-01

BE IT RESOLVED, BY THE Board of Directors of Santa Clara Valley Water District, as follows:

Effective March 14, 2017, for a trial period concluding in six months, regular meetings of the Board of Directors of Santa Clara Valley Water District shall be held as follows:

Second Tuesday of each month beginning at 1:00 p.m.; and
Fourth Tuesday of each month beginning at 6:00 p.m.

All regular meetings shall be held in the chambers of said Board, 5700 Almaden Expressway (Headquarters Building), San Jose, California 95118, or at such other place as the Board may direct; provided that, a notice of such other meeting place shall be conspicuously posted at least 72 hours prior to such meeting at the location where Board agendas are posted.

When required, Closed Session meetings of the Board of Directors of Santa Clara Valley Water District shall be held on regularly scheduled meeting dates, beginning at a time designated by the Clerk of the Board to accommodate discussion of identified subject matter.

Special meetings of the Board must be called and held as provided by pertinent general law.

Regular and special meetings of the Board may be adjourned to a time and place certain as specified in the announced action of the Board.

Resolution No. 16-01 of this Board is hereby rescinded.

PASSED AND ADOPTED by the Board of Directors of Santa Clara Valley Water District by the following vote on February 14, 2017.

AYES:	Directors	R. Santos, G. Kremen, N. Hsueh, B. Keegan, L. LeZotte, J. Varela
NOES:	Directors	None
ABSENT:	Directors	T. Estremera
ABSTAIN:	Directors	None

SANTA CLARA VALLEY WATER DISTRICT

By: John L. Varela
John L. Varela
Chair/Board of Directors

ATTEST: MICHELE L. KING, CMC
Michele L. King
Clerk/Board of Directors

BOARD OF DIRECTORS
SANTA CLARA VALLEY WATER DISTRICT

RESOLUTION NO.

SETTING TIME AND PLACE OF MEETINGS OF
THE BOARD OF DIRECTORS OF THE SANTA CLARA VALLEY WATER DISTRICT
AND RESCINDING RESOLUTION NO. 17-09

BE IT RESOLVED, BY THE Board of Directors of Santa Clara Valley Water District, as follows:

Effective with the adoption of this resolution, regular meetings of the Board of Directors of Santa Clara Valley Water District shall be held as follows:

Second Tuesday of each month beginning at 1:00 p.m.; and
Fourth Tuesday of each month beginning at 6:00 p.m.

All regular meetings shall be held in the chambers of said Board, 5700 Almaden Expressway (Headquarters Building), San Jose, California 95118, or at such other place as the Board may direct; provided that, a notice of such other meeting place shall be conspicuously posted at least 72 hours prior to such meeting at the location where Board agendas are posted.

When required, Closed Session meetings of the Board of Directors of Santa Clara Valley Water District shall be held on regularly scheduled meeting dates, beginning at a time designated by the Clerk of the Board to accommodate discussion of identified subject matter.

Special meetings of the Board must be called and held as provided by pertinent general law.

Regular and special meetings of the Board may be adjourned to a time and place certain as specified in the announced action of the Board.

Resolution No. 17-09 of this Board is hereby rescinded.

PASSED AND ADOPTED by the Board of Directors of Santa Clara Valley Water District by the following vote on August 8, 2017

AYES: Directors

NOES: Directors

ABSENT: Directors

ABSTAIN: Directors

SANTA CLARA VALLEY WATER DISTRICT

By:_____
Richard P. Santos
Vice Chair/Board of Directors

ATTEST: MICHELE L. KING, CMC

_____
Clerk/Board of Directors

Santa Clara Valley Water District

File No.: 17-0478

Agenda Date: 8/8/2017
Item No.: 4.2.

BOARD AGENDA MEMORANDUM

SUBJECT:
Proposed Revisions to Board Governance Policies - Governance Process GP-7 - Values Statement - Documenting the Management Goal to Ensure the District Allows for Work, Life Balance and is Identified as an Employer of Choice.

RECOMMENDATION:
Approve the proposed revisions to Governance Process GP-7 - Value Statement, reflecting the Board's identified management goal to ensure the District allows for work, life balance and is identified as an Employer of Choice.

SUMMARY:
At the October 4, 2016 Board Priorities and Strategic Direction workshop, the Board identified a business management goal - Ensure that the District allows for work, life balance and that it is identified as an employer of choice.

The Board directed the Board Policy and Planning Committee (Committee) to review Board Governance Process Policy GP-7, Values Statement, to ensure that the policy language reflects the Board's request, and return to the Board with recommendations for discussion.

At the June 14, 2017, Committee meeting, Staff presented proposed revisions to Governance Process GP-7, to reflect the Board's request. With two minor changes, the Committee agreed with the proposed changes and requested that it be presented to the full Board for consideration.

Attachment 1 is a redlined version of GP-7 the reflects the language requested by the Board and approved by the Committee. Attachment 2 is a finalized copy of the revised GP-7 (with changes incorporated) for reference.

When the new language is approved by the Board, the Board Governance Policies will be updated and posted to the District's web page for easy access and reference.

FINANCIAL IMPACT:
There is no financial impact associated with this item.

CEQA:
The recommended action is a ministerial action and thus is not subject to the requirements of CEQA.

ATTACHMENTS:
Attachment 1: Redlined Version of GP-7
Attachment 2: Finalized Version of GP-7

UNCLASSIFIED MANAGER:
Michele King, 408-630-2711

Governance Policies of the Board

Title: Values Statement **Category:** Governance Process		
Policy No. GP-7	Adopted: June 15, 1999 Chair: Larry Wilson	Latest Revision: ~~July 28, 2014~~August 8, 2017 Chair: ~~Tony Estremera~~John L. Varela
The Board of Directors revised and adopted this policy at its public meeting on the latest revision date.		

The values of the Board reflected throughout Board policies are as follows:

~~At~~ T~~t~~he Santa Clara Valley Water District ~~we~~ believes, and ~~together we~~ will exemplify, the following values:

7.1. ~~We~~ The District is ~~are~~ entrusted to serve the public ~~and are responsible for~~ by carrying out ~~the District~~its mission for the benefit of the community.

7.2. ~~We~~ The District is ~~are~~ committed to providing excellent service to all customers.

7.3. All individuals are unique and important and will be treated with fairness, dignity, and respect.

7.4. ~~We~~ The District takes pride in ~~our~~ its work and ~~are~~ is accountable ~~and trusted~~ to carry out ~~our~~ its responsibilities safely with honesty and integrity.

7.5. Initiative, leadership, personal development, and training are vital for ~~us to~~ continuous~~ly~~ improvement.

7.6. Open communication, cooperation, and teamwork are shared responsibilities and essential to the successful performance of ~~our~~ District work.

7.7. ~~We~~ The District is ~~are~~ committed to creating an inclusive work environment, which reflects and supports the diversity of ~~our~~ the community and enriches our perspectives.

~~7.8. A balance between work and family is essential to the quality of our lives and we will promote a family-friendly work environment.~~

7.8. The District strives to support a work culture and workplace environment that attracts and retains superior employees empowered to make decisions about, and take responsibility for, how they do their jobs.

7.9. The District is committed to its employees and supports market based competitive compensation that is equitable and rewards accomplishment and encourages high performance.

7.10. The District is committed to sustaining a healthy work-life balance for its employees and places a high value on all the things that provide enrichment and fulfillment, including work and career, health and

fitness, family and relationships, spirituality, community service, hobbies and passions, intellectual stimulation, rest and recreation.

Governance Policies of the Board

Title: Values Statement Category: Governance Process		
Policy No. GP-7	Adopted: June 15, 1999 Chair: Larry Wilson	Latest Revision: August 8, 2017 Chair: John L. Varela
The Board of Directors revised and adopted this policy at its public meeting on the latest revision date.		

The values of the Board reflected throughout Board policies are as follows:

The Santa Clara Valley Water District believes, and will exemplify, the following values:

7.1. The District is entrusted to serve the public by carrying out its mission for the benefit of the community.

7.2. The District is committed to providing excellent service to all customers.

7.3. All individuals are unique and important and will be treated with fairness, dignity, and respect.

7.4. The District takes pride in its work and is accountable to carry out its responsibilities safely with honesty and integrity.

7.5. Initiative, leadership, personal development, and training are vital for continuous improvement.

7.6. Open communication, cooperation, and teamwork are shared responsibilities and essential to the successful performance of District work.

7.7. The District is committed to creating an inclusive work environment, which reflects and supports the diversity of the community and enriches our perspectives.

7.8. The District strives to support a work culture and workplace environment that attracts and retains superior employees empowered to make decisions about, and take responsibility for, how they do their jobs.

7.9. The District is committed to its employees and supports market based competitive compensation that is equitable and rewards accomplishment and encourages high performance.

7.10. The District is committed to sustaining a healthy work-life balance for its employees and places a high value on all the things that provide enrichment and fulfillment, including work and career, health and fitness, family and relationships, spirituality, community service, hobbies and passions, intellectual stimulation, rest and recreation.

Santa Clara Valley Water District

File No.: 17-0163

Agenda Date: 8/8/2017
Item No.: 4.3.

BOARD AGENDA MEMORANDUM

SUBJECT:
Consideration of Action Prohibiting Use of District Funds for Employee Travel to States Listed on the California State Attorney General's Website that Have Laws Discriminatory to the Lesbian, Gay, Bisexual, and Transgender Community, and Consideration of Rescission of Previously Adopted Resolution No. 10-42, Prohibiting Use of District Funds for Employee Travel to Arizona (Response to BMR-17-002).

RECOMMENDATION:

A. Authorize the Interim Chief Executive Officer to order all District departments to prohibit use of District funds for employee travel to states identified by the California State Attorney General (AG) on the AG's website because these states have passed discriminatory laws against the Lesbian, Gay, Bisexual, and Transgender (LGBT) community as described in California Government Code section 11139.8, except for the following purposes:

1. Enforcement of California law, including auditing and revenue collection;

2. Litigation;

3. To meet contractual obligations incurred before August 8, 2017;

4. To comply with requests by the federal government to appear before committees;

5. To participate in meetings or training required by a grant or required to maintain grant funding;

6. To complete job-required training necessary to maintain licensure or similar standards required for holding a position, in the event that comparable training cannot be obtained in California or a different state; or

7. For the protection of public health, welfare, or safety, or critical to the mission of the Santa Clara Valley Water District (District), as determined by the District; and

B. Rescind Board Resolution 10-42 adopted on May 25, 2010 that prohibited the use of District funds for official business and employee travel to Arizona, because the Arizona laws that were the subject of that Resolution, Senate Bill 1070 and House Bill 2162, which were discriminatory laws against immigration, have been struck down by the U.S. Supreme Court.

SUMMARY:

Recommendation 1 Summary

Over the last year, eight states-Alabama, Kansas, Kentucky, Mississippi, North Carolina, South Dakota, Texas, and Tennessee-have been identified and listed by the AG as states that have passed laws that discriminate against the LGBT community. In recognition of the District's commitment to diversity and inclusion of all staff, and the District's values of protecting employees from risk while performing their duties, staff recommends that the Board authorize the Chief Executive Officer to order all District departments to prohibit District funds to be used for official business in and employee travel to states listed on the AG's website unless critical to the mission of the District, because these states have passed laws that discriminate against the LGBT community, and therefore could place District employees at increased risk of unfair treatment and discriminatory practices. This proposed action is consistent with a Board action taken on May 25, 2010, when the Board also authorized the Chief Executive Officer to order all District departments to prohibit the use of district funds for official business in and employee travel to Arizona to attend conventions, meetings, or other events, because Arizona had passed two discriminatory laws against immigrants.

Recommendation 2 Summary

Senate Bill 1070 (SB 1070) and House Bill 2162 (HB 2162) were signed into law by Arizona Governor Brewer in April 2010. This law allowed law enforcement officers to randomly stop individuals and question their immigration status. Due to the discriminatory nature of this law, on May 25, 2010, the Board passed Resolution No. 10-42 prohibiting the use of district funds for official business and employee travel to Arizona, unless critical to the mission of the district. Since then, the U.S. Supreme Court has struck down this legislation. In recognition of these actions, staff recommends that the Board rescind its resolution prohibiting travel to Arizona.

ANALYSIS

Analysis for Recommendation 1

Background

The District demonstrates a strong commitment to inclusion and workforce protections through its robust governance policies and legislative principles. This recommendation to prohibit District funds to be used for official business in and employee travel to states listed on the AG's website builds upon Board Action taken on May 25, 2010, when the Board authorized the CEO to prohibit the use of District funds for official business and employee travel to Arizona, unless critical to the mission of the District, because Arizona had passed two discriminatory laws against immigrants---SB 1070 and HB 2162.

In California, there is precedent of an adopted measure with similar intent. The State recently enacted Assembly Bill 1887, as of January 1, 2017, which adopts a prohibition on State-funded and State-sponsored travel to states with discriminatory laws.

Below is a brief description of how Alabama, Kansas, Kentucky, Mississippi, North Carolina, South Dakota, Texas, and Tennessee either have adopted or are currently considering passing discriminatory laws against the LGBT community, which contrasts with the District's values and policies. A review of the respective laws in each state will inform the Board to what extent District employee travel and exposure to the respective state could subject them to increased risk of unfair, discriminatory, and unlawful scrutiny.

States with Codified or Proposed Discriminatory Laws

Alabama

In May 2017, Alabama Governor Kay Ivery (R) signed House Bill 24 into law, which allows private child adoption and foster placement agencies the right to discriminate in, or refuse, the services they offer to LGBTQ families and children. Specifically, the bill prohibits the state from "discriminating against or refusing to license a provider of child placing services…on the basis that the provider declines to provide a child placing service or carry out an activity that conflicts with the religious beliefs of the provider". Prior to this bill passing, it had been brought to the Alabama House floor on two separate occasions, failing both times. This bill is unique from others like it (i.e. South Dakota SB 149), in that it does not disallow the child placement agencies to be discriminatory. Rather, it prevents the state from revoking or refusing to license a faith based child placement agency if they plan to or do act in a discriminatory manner. This law also allows agencies to discriminate on any characteristic of a potential foster placement or adoption by not defining what individual characteristics fall under "sincerely held religious belief", the term which is the basis for refusing child placement.

Kansas

In March 2016, Kansas Governor Sam Brownback signed Senate Bill 175 (SB 175) into law, which makes LGBTQ and other minority college students more vulnerable to discrimination by university-funded student groups. Specifically, SB 175 allows public universities to fund religious student associations that discriminate by restricting their membership and denying LGBTQ students from participating based on the associations "religious beliefs." Prior to the passage of SB 175, many Kansas educational institutions, including the Kansas Board of Regents and the University of Kansas, adopted non-discrimination policies which prohibit student organizations from receiving financial and other support from the school if they are determined to be discriminating against students based on race, sex, religion, sexual orientation, or gender identity. Passage of SB 175 codifies discriminatory practices by allowing a cause of action to be brought against the postsecondary institution by a student or religious student association aggrieved by a violation of this provision. The aggrieved party may seek appropriate relief, including monetary damages, and may assert such violation as a defense or counterclaim in a civil or administrative proceeding brought against the aggrieved party. SB 175 operates to nullify individual university-adopted non-discrimination policies.

Mississippi

On April 5, 2016, Mississippi Governor Phil Bryant signed into law House Bill 1523 (HB 1523), which identifies the official religious beliefs of Mississippi that "marriage is or should be recognized as the union of one man and one woman"; and "sexual relations are properly reserved to a marriage

between one man and one woman." The new law allows individuals, religious organizations, private businesses and associations to use religion to discriminate against LGBT Mississippians in some of the most important aspects of their lives, including their place of employment, at educational institutions, and in their communities. Specifically, HB 1523 permits businesses to refuse to provide "accommodations, facilities, or goods" as long as they relate to the "solemnization, formation, celebration, or recognition" of a marriage. The law also allows private citizens to refuse to provide counseling and psychological treatment, which is in clear violation of professional medical guidelines.

North Carolina

In March 2016, North Carolina signed into law House Bill 2 (HB 2), which requires that people use public restrooms and locker rooms that correspond to the gender listed on their birth certificates. This measure has had far-reaching consequences beyond codifying discrimination against transgender persons. Not only does HB 2 reverse a City of Charlotte ordinance that had extended some rights to people who are gay or transgender, but it also nullified local ordinances around the state that would have expanded protections for the LGBT community. In fact, it makes it illegal for cities to expand upon state laws regulating workplace discrimination, as more than a dozen cities had previously done.

Businesses, athletic associations, and social justice groups have demonstrated vocal opposition to HB 2 by withdrawing their events or operations from North Carolina. For example, the National Basketball Association (NBA) announced it was moving the 2017 All-Star Game, while the National Collegiate Athletic Association (NCAA) and the Atlantic Coast Conference (ACC) pulled various events from the state and relocated them elsewhere. More than 200 major CEOs and business leaders signed an open letter calling for full repeal of HB 2 - including many of North Carolina's largest employers. More than 50 investment managers with more than $2.1 trillion in investments signed a similar letter. In May 2016, the U.S. Department of Justice (DOJ) filed suit in federal court, stating that HB 2's state-mandated discrimination against transgender people, including government workers and students, violates Title VII of the Civil Rights Act of 1965, Title IX of the Education Amendments of 1972 and the Violence Against Women Act of 2011, which could jeopardize billions in federal education funding. Moreover, the National Association for the Advancement of Colored People (NAACP) is calling for a national boycott of North Carolina in protest of their discriminatory policies.

The opposition to HB2 has resulted in the passage of what some characterize as a compromise bill, HB 142. HB 142 forbids government entities from enacting rules on multiple-occupancy bathrooms, showers, and changing rooms except in accordance with an act of the General Assembly. HB 142 continues to nullify the Charlotte ordinance and prohibits local governments from enacting or amending "an ordinance regulating private employment practices or regulating public accommodations."

South Dakota

In South Dakota, Senate Bill 149 (SB 149) was enacted March 10, 2017. Similar to Alabama House Bill 24, it could prevent qualified LGBT couples from adopting or serving as foster parents. Promoted as a bill to protect faith-based or religious child-placement agencies, the statutory language reads:

"No child-placement agency may be required to provide any service that conflicts with, or provide any service under circumstances that conflict with any sincerely-held religious belief or moral conviction of the child-placement agency". The Act states that the organizations are not allowed to decline services based solely on race, ethnicity, or national origin, however, the omission of discrimination based on sexual orientation provides a legal basis for disallowing LGBTQ couples from adopting or serving as foster parents. Although this bill is not overtly discriminatory, the implications of injustice is enough for civil rights, child welfare, and LGBTQ rights organizations such as the American Civil Liberties Union, the National Association of Social Workers, and the Movement Advancement Project to ban together in opposition. This law would also allow discrimination based on religion.

Texas

In May 2017, Texas passed House Bill 3859 (HB 3859) called "Protection of Rights of Conscience for Child Welfare Service Providers". This bill, promoted as a way to maintain a diverse network of child placement service providers, protects faith based child placement services from 'adverse action', such as being denied an application, contract, or license by the state or having a current application, contract, license, or similar agreement terminated, suspended, or cancelled on the basis of refusing a placement if the organization stated that the refusal was based on a contradiction of a sincerely held religious belief. However, this bill does expressively state that race, ethnicity, or nation of origin cannot be considered contradictory to an organization's belief system. Additionally, the law makes it the discretion of the organization to choose a household "in the best interest of the child's physical, psychological, and emotional needs and development". This includes allowing organizations to deny minors access to things such as medical care or medical care facilities that goes against the organization's sincerely held religious belief, including those that provide contraceptives, abortions, or like services.

Additionally, in May, 2017, Texas passed Senate Bill 6, which contains an unrelated amendment that restricts restroom use in public schools by birth certificate gender and required the schools to build separate single stall facilities for transgender students.

Tennessee

In Tennessee, Senate Bill 127 (SB 127) was introduced that would allow contractors with state or local governments to discriminate against Lesbian Gay Bisexual, Transgender, and Queer (LGBTQ) people. Specifically, the proposal would prohibit state agencies and municipalities from requiring that businesses, organizations, contractors, and grantees have LGBTQ nondiscrimination policies. The proposal is currently making its way through the state legislature, and could be heard by the full Senate at any moment. Similarly, anti-transgender legislation, Senate Bill 771 (SB 771), is also being considered by the state legislature and would require people access restrooms and locker rooms in public schools and public institutions of higher education based on the gender noted on a student's birth certificate.

In May 2016, Tennessee Governor Bill Haslam signed Tennessee Senate Bill 1556 (SB 1556) into

law that allows therapists and counselors with "sincerely held principles" to reject gay, lesbian, transgender and other clients. SB 1556 creates immunity for such action because it does not permit such action to be the basis for a civil cause of action or criminal prosecution; however, SB 1556 maintains liability for counselors who will not counsel a client based on the counselor's sincerely held principles when an individual seeking or undergoing the counseling is in imminent danger of harming themselves or others.

Analysis for Recommendation 2
Since January 1, 2017, the state of California has adopted a prohibition on State-funded and State-sponsored travel to states with discriminatory laws. Arizona no longer falls under this category and has been removed from the AG's list of discriminatory states, therefore, it is appropriate for the District to resume official business and employee travel to Arizona.

Importance to the District

The District is committed to cultivating a diverse workforce, and to enacting necessary worker protections. District employees often travel to other states for District business. As a responsible employer of more than 780 District employees, the Board is empowered to take appropriate action to protect District employees' rights and ensure that they are not subjected to increased risk of unfair treatment and discriminatory practices, should they travel on official District business to states listed on the AG's website. Given its strong commitment to equity, inclusion, and workforce protections, the Board may consider prohibiting the use of District funds for travel for official business, attendance at conventions, meetings, or other events in states listed on the AG's website, unless critical to the mission of the District.

The District is committed to diversity and inclusiveness for its workforce and is dedicated to the protection of the individuals that it employs. Although the prohibition on travel to Arizona was necessary in 2010 to prevent increased risk of unfair treatment and discrimination to District employees, it is no longer necessary, given that the discriminatory laws in Arizona were struck down by the U.S. Supreme Court.

Pros for Recommendation 1

- This action would bolster workforce protection.
- The action would underscore the District's ongoing commitment to inclusion and cultivating a diverse workforce.
- The action is consistent with prior Board Action taken on May 25, 2010, that prohibited the use of district funds for employee travel to Arizona, because Arizona had passed two laws discriminatory to immigrants.
- The District's funds and resources will not support states that actively work to codify measures promoting intolerance and bigotry.

Cons for Recommendation 1

- Those who support the enactment of discriminatory laws in these states may protest the District's position.
- Businesses and individuals who reside in states that have enacted discriminatory laws but who have not engaged in any discriminatory conduct are penalized by this prohibition.
- Cities located in effected states that have affirmatively taken steps to enact legislation prohibiting discrimination are economically penalized because of the preemptive laws adopted by their state legislature.

Pros for Recommendation 2

- This action will increase workforce participation in national and regional conventions, meetings, and other professional events.
- This action will provide an overture to Arizona contacts that the District continues to value its relationships with these organizations.
- This action will optimize District travel while still complying with State legislation.

Cons for Recommendation 2

- There is the potential for residual discrimination within the state by those who supported the original legislation.

Policy Basis for Recommended Actions:

1. The Board has several Governance Process and Executive Limitation Policies (GP-7.3, 7.7, 11.1, 11.3; EL-3.1, 3.4, 8.1, 8.9), and legislative guiding principles in place that codify the District's strong and ongoing commitment to protect workers against discriminatory practices or conditions, cultivate a diverse and inclusive work environment, and treat employees with fairness, dignity, and respect. This action is consistent with those policies.

   Finally, this action is consistent with the Board's adopted 2017 Legislative Guiding Principle that speaks to the protection and stability of its workforce, which includes opposing legislation that places employees at risk while performing their duties.

2. The basis for the original Resolution 10-42 applying to Arizona was derived from the same Governance Process and Executive Limitation Policies listed in #1 above, as well as the same legislative guiding principles that reaffirmed the District's commitment to protecting its workers against overt and covert acts of discrimination.

   Since the Arizona laws in question are no longer in effect, the Board Policies are no longer at odds with the State's legislation; therefore, the Board may consider rescinding the previous Resolution,

and lift the prohibition on expenditure of District funds for employee travel to Arizona.

FINANCIAL IMPACT:
There is no financial impact associated with this item.

CEQA:
Neither recommended action constitutes a project under CEQA because it does not have a potential for resulting in direct or reasonably foreseeable indirect physical change in the environment.

ATTACHMENTS:
Attachment 1: SCVWD Resolution No. 10-42

UNCLASSIFIED MANAGER:
Rachael Gibson, 408-630-2884

Santa Clara Valley Water District

FC 1025 (11/18/09)

Meeting Date:	May 25, 2010
Agenda Item:	07
Unclassified Manager:	Rick Callender
Extension:	2017
Director(s):	

CONFORMED COPY

BOARD AGENDA MEMO

SUBJECT: Resolution to Urge Repeal of Arizona Law SB 1070, the "Support our Law Enforcement and Safe Neighborhoods Act" and Arizona Law HB 2162 and Take Other Actions in Support of the Repeal.

RECOMMENDATION:

That the Board consider one or more of the following actions:

A. Adopt the resolution specifying the Board of Directors' desire to have the State of Arizona repeal SB 1070 and HB 2162; and send a copy of the resolution to Arizona Governor Jan Brewer.
B. Authorize the Chief Executive Officer to order all District departments to prohibit the use of district funds for official business, attendance at conventions, meetings, or other events in the State of Arizona, unless critical to the mission of the District.
C. Authorize District Counsel to explore opportunities to file *amicus curia* in support of appropriate litigation challenging the Arizona laws or to join in efforts by other organizations to do the same.

SUMMARY:

On April 23, 2010, and April 30, 2010, Arizona Governor Jan Brewer signed into law SB 1070 and HB 2162 respectively, ushering into state law sweeping changes in the ability of state and local law enforcement to enforce federal immigration law. Provisions of the Arizona legislation include the ability for local and state law enforcement to demand that a person present proof of lawful presence in the United States during a stop, detention, or arrest police action; makes failure to provide documentation of lawful presence in the United States on demand a misdemeanor offense; and allows for a local or state law enforcement official to be subjected to civil action by any person if the officer is found to not have acted in good faith to determine the immigration status of persons stopped for police action.

Since the passage of this legislation in Arizona, the City of San Diego, the City of Los Angeles and the City and County of San Francisco have each passed resolutions urging the repeal of the legislation and have each taken some level of action to limit their fiscal relationship with the State of Arizona. These measures have included an urging of residents to avoid travel to the

The Board approved amending the resolution instructing and authorizing the CEO to take action stated in Recommendation B only; and send a letter to Congress and the President requesting that work begin immediately on immigration issues and reforming Federal immigration laws.

ADOPTED

MAY 25, 2010

state, a call to boycott the 2010 Major League Baseball All-Star Game, and a call for a boycott of all travel and business with the State of Arizona.

The attached resolution presents a broad spectrum of actions available to the Board of Directors in communicating the District's desire to have Arizona's recent legislation repealed, and details a variety of financial impacts to Arizona in support of its position. It can be noted that economic boycotts have been successful in affecting public policy issues in the past, including the numerous boycotts of Arizona in the 1990's for its failure to adopt a state holiday recognizing Martin Luther King, Jr. and on a more global scale, the calls for divestiture and boycott of the Country of South Africa in the 1970's and 1980's for its policy of apartheid.

FINANCIAL IMPACT:

Degree unknown, but it should be noted the District does carry some contractual fiscal obligations with Arizona companies, in the form of consulting services as well as procurement of materials and supplies.

ATTACHMENTS:

Attachment 1: Resolution

REVISED

RESOLUTION NO. 10-

URGING REPEAL OF ARIZONA LAW SB 1070, THE "SUPPORT OUR LAW ENFORCEMENT AND SAFE NEIGHBORHOODS ACT" AND ARIZONA LAW HB 2162 AND TAKING OTHER ACTIONS IN SUPPORT OF THE REPEAL

WHEREAS, on April 23, 2010, the Governor of Arizona signed into law SB 1070, the "Support Our Law Enforcement and Safe Neighborhoods Act," permitting state and local law enforcement officials to engage in racial profiling, thereby turning the clock back on a generation of civil rights gains;

WHEREAS, on April 30, 2010, the Governor of Arizona signed into law HB 2162 which modifies SB 1070 to prohibit racial profiling but still criminalizes unlawful presence; requires state and local law enforcement to engage in immigration enforcement; requires police to question people they "reasonably suspect" of being in the country unlawfully in the course of any "lawful stop, detention or arrest"; and grants police the authority to arrest individuals without a warrant for federal civil immigration violation;

WHEREAS, the law undermines fundamental civil rights and civil liberties, and poses a special threat to people of color who travel through Arizona;

WHEREAS, the State of California, County of Santa Clara and the Santa Clara Valley Water District prohibit the unequal treatment of its employees, contractors, and customers and, furthermore, prohibit racial profiling of any kind;

WHEREAS, the Santa Clara Valley Water District employs persons of various nationalities, and particularly persons of Hispanic or Latino origin, who potentially could be targeted and harassed by law enforcement officials in Arizona as "reasonably suspect" if they fall into a stereotype held by law enforcement officers;

WHEREAS, civil rights leaders, constitutional rights scholars, elected officials, and police chiefs across the country are repudiating the new law;

WHEREAS, throughout the month of May the County of Santa Clara and California cities including San Jose, San Francisco, Los Angeles, San Diego, are considering or have passed resolutions condemning the Arizona laws;

BE IT RESOLVED, by the Santa Clara Valley Water District, for and on behalf of the employees of the District, that the District Board urges the repeal of Arizona State Laws SB 1070 and HB 2162;

BE IT ~~FURTHER~~ RESOLVED, that the Santa Clara Valley Water District Board of Directors instructs its Chief Executive Officer to order all departments to prohibit the use of District funds for travel for official business, attendance of conventions, meetings, or other events in the State of Arizona, unless critical to the mission of the District, to ensure that District employees are not subjected to increased risk of their being subjected to inappropriate and unlawful scrutiny;

BE IT FURTHER RESOLVED, that the Santa Clara Valley Water District Board of Directors instructs its legal counsel to explore opportunities to file *amicus curia* to accompany any court challenges of the Arizona measure, or to join an *amicus* filed by another organization such as the Association of California Water Agencies, League of California Cities, California State

REVISED

Association of Counties, or California Special Districts Association; and directs the Clerk of the Board to provide a copy of this resolution to Arizona Governor Jan Brewer.

PASSED AND ADOPTED by the Board of Directors of Santa Clara Valley Water District by the following vote on May 25, 2010.

AYES: Directors

NOES: Directors

ABSENT: Directors

ABSTAIN: Directors

SANTA CLARA VALLEY WATER DISTRICT

By: _____
RICHARD P. SANTOS
Chair/Board of Directors

ATTEST: MICHELE L. KING

_____
Clerk/Board of Directors

RESOLUTION NO. 10-42

TAKING ACTIONS TO PROTECT EMPLOYEES RIGHTS FROM ARIZONA LAW SB1070, THE "SUPPORT OUR LAW ENFORCEMENT AND SAFE NEIGHBORHOODS ACT" AND ARIZONA LAW HB 2162

WHEREAS, on April 23, 2010, the Governor of Arizona signed into law SB 1070, the "Support Our Law Enforcement and Safe Neighborhoods Act," permitting state and local law enforcement officials to engage in racial profiling, thereby turning the clock back on a generation of civil rights gains;

WHEREAS, on April 30, 2010, the Governor of Arizona signed into law HB 2162 which modifies SB 1070 to prohibit racial profiling but still criminalizes unlawful presence; requires state and local law enforcement to engage in immigration enforcement; requires police to question people they "reasonably suspect" of being in the country unlawfully in the course of any "lawful stop, detention or arrest"; and grants police the authority to arrest individuals without a warrant for federal civil immigration violation;

WHEREAS, the law undermines fundamental civil rights and civil liberties, and poses a special threat to people of color who travel through Arizona;

WHEREAS, the State of California, County of Santa Clara and the Santa Clara Valley Water District prohibit the unequal treatment of its employees, contractors, and customers and, furthermore, prohibit racial profiling of any kind;

WHEREAS, the Santa Clara Valley Water District employs persons of various nationalities, and particularly persons of Hispanic or Latino origin, who potentially could be targeted and harassed by law enforcement officials in Arizona as "reasonably suspect" if they fall into a stereotype held by law enforcement officers;

WHEREAS, civil rights leaders, constitutional rights scholars, elected officials, and police chiefs across the country are repudiating the new law;

WHEREAS, throughout the month of May the County of Santa Clara and California cities including San Jose, San Francisco, Los Angeles, San Diego, are considering or have passed resolutions condemning the Arizona laws;

BE IT RESOLVED, that the Santa Clara Valley Water District Board of Directors will send a letter to Congress and the President of the United States requesting that work begin immediately on immigration issues and the reformation of Federal Immigration Laws;

BE IT FURTHER RESOLVED, that the Santa Clara Valley Water District Board of Directors instructs its Chief Executive Officer to order all departments to prohibit the use of District funds for travel for official business, attendance of conventions, meetings, or other events in the State of Arizona, unless critical to the mission of the District, to ensure that District employees are not subjected to increased risk of their being subjected to inappropriate and unlawful scrutiny;

PASSED AND ADOPTED by the Board of Directors of Santa Clara Valley Water District by the following vote on May 25, 2010.

TAKING ACTIONS TO PROTECT EMPLOYEES RIGHTS FROM ARIZONA LAW SB1070, THE "SUPPORT OUR LAW ENFORCEMENT AND SAFE NEIGHBORHOODS ACT" AND ARIZONA LAW HB 2162

AYES: Directors T. Estremera, R. Kamei, J. Judge, P. Kwok, S. Mann, R. Santos

NOES: Directors L. Wilson

ABSENT: Directors None

ABSTAIN: Directors None

SANTA CLARA VALLEY WATER DISTRICT

By: Richard P. Santos
RICHARD P. SANTOS
Chair/Board of Directors

ATTEST: MICHELE L. KING

Michele L. King
Clerk/Board of Directors

RL12674.docx

Santa Clara Valley Water District

File No.: 17-0553

Agenda Date: 8/8/2017
Item No.: *4.4.

BOARD AGENDA MEMORANDUM

SUBJECT:
Board Ad Hoc Committee for Coyote Creek Flood Risk Reduction - Responding to BMR No. R-17-0021, and Creek Management Update.

RECOMMENDATION:

A. Receive an update on District creek management actions in Coyote Creek, since the February 21, 2017 (Presidents' Day Weekend) flood event;

B. Discuss and determine whether an Ad Hoc Committee for Coyote Creek Flood Risk Reduction will be established;

C. Discuss and determine the need, purpose, and scope of the proposed Coyote Creek Flood Risk Reduction Ad Hoc Committee; and

D. If an Ad Hoc Committee will be formed, discuss and determine committee membership.

SUMMARY:

Flood Response Actions

Since the February 21, 2017 flood event, water district staff have been working on enhancing District's emergency response, as well as various means to improve creek conditions in the areas that experienced flooding. A joint emergency action plan (EAP) is under development with the City of San Jose, to be implemented prior to the winter season. An update on the EAP will be provided to the Board on August 22, 2017. Staff have also developed options for flood barriers at the Rock Springs neighborhood which will also be brought to the Board for consideration on August 22. During a June 13, 2017 public hearing for the Coyote Creek Flood Protection Project, the Board approved certain changes to the Project to expedite flood risk reduction for the community. Finally, the US Army Corps of Engineers (Corps) has agreed to partner with the district to develop a feasibility study for reducing flood risks on Coyote Creek, and staff is drafting an agreement to allow the district to pay the Corps for technical assistance in support of the study.

Creek Management Actions

Over the spring and summer of 2017, the water district has planned and carried out a series of creek management actions to remove channel blockages, repair structures, remove debris, and clear invasive and non-native vegetation. Attachment 1 describes the work completed to date and the work proposed for the remainder of 2017.

Board Ad Hoc Committee for Coyote Creek

On June 13, 2017, the Board directed staff (BMR R-17-0021) to agendize discussion for the formation of an Ad Hoc Committee of the Board to address flood risk reduction issues on Coyote Creek raised by the community, such as viability of an Anderson Dam pump-over concept, interim flood reduction measures, and emergency action planning. Therefore, the Board may wish to consider the following:

- Establishment of an Ad Hoc Committee;
- Need, purpose, and scope of an Ad Hoc Committee; and
- Ad Hoc Committee membership, if one is established.

FINANCIAL IMPACT:
None.

CEQA:
The recommended actions do not constitute a project under CEQA because they do not have a potential for resulting in direct or reasonably foreseeable indirect physical change in the environment.

ATTACHMENTS:
*Item 4.4-A - Handout, Irvin
*Item 4.4-B - Handout, Imelda
*Supplemental Agenda Memo
*Supplemental Attachment 1

UNCLASSIFIED MANAGER:
Afshin Rouhani, 408-630-2616

Michele King

From: katja.irvin@sbcglobal.net
Sent: Monday, July 31, 2017 9:59 AM
To: Clerk of the Board
Subject: SCVWD Agenda Comment Form

Agenda Comment Form

Current Date:	07-31-2017
Name:	Katja Irvin
Address:	215 S 19th St
City:	San Jose
State:	CA
Zip Code:	95116
Telephone:	Ext:
Email Address:	katja.irvin@sbcglobal.net
Agency, Business or Group (if applicable):	
Contact:	Attention: Clerk of the Board
Board Meeting Date:	08/08/17
Board Item Number:	4.4
I would like to:	Express Support
Comments:	Please broadcast and archive these meetings because this is an important issue for my neighborhood and most of us cannot attend these meetings.

Michele King

From: imelda004@aol.com
Sent: Monday, July 31, 2017 9:17 PM
To: Clerk of the Board
Subject: SCVWD Agenda Comment Form

Agenda Comment Form

Current Date:	07-31-2017
Name:	
Address:	
City:	
State:	CA
Zip Code:	
Telephone:	Ext:
Email Address:	imelda004@aol.com
Agency, Business or Group (if applicable):	
Contact:	Attention: Clerk of the Board
Board Meeting Date:	08/08/17
Board Item Number:	4.4
I would like to:	Express Support
Comments:	Please broadcast and archive these meetings because this is an important issue for my neighborhood and most of us cannot attend these meetings.

Santa Clara Valley Water District

File No.: 17-0555

Agenda Date: 8/8/2017
Item No.: *4.4.

SUPPLEMENTAL BOARD AGENDA MEMORANDUM

SUBJECT:
Board Ad Hoc Committee for Coyote Creek Flood Risk Reduction - Responding to BMR No. R-17-0021, and Creek Management Update.

REASON FOR SUPPLEMENTAL MEMORANDUM:
The attached PowerPoint is being provided to the Board as supplemental information at the request of the Board Policy Planning Committee, during the Committee's July 24, 2017 meeting.

RECOMMENDATION:
A. Receive an update on District creek management actions in Coyote Creek, since the February 21, 2017 (Presidents' Day Weekend) flood event;
B. Discuss and determine whether an Ad Hoc Committee for Coyote Creek Flood Risk Reduction will be established;
C. Discuss and determine the need, purpose, and scope of the proposed Coyote Creek Flood Risk Reduction Ad Hoc Committee; and
D. If an Ad Hoc Committee will be formed, discuss and determine committee membership.

SUMMARY:
The attached Coyote Creek Management Update PowerPoint presentation is being provided to the Board as supplemental information at the request of the Board Policy Planning Committee, during the Committee's July 24, 2017 meeting.

FINANCIAL IMPACT:
There are no changes to the originally provided financial impact statement for this item.

CEQA:
There are no changes to the originally provided CEQA statement for this item.

ATTACHMENTS:
Attachment 1: PowerPoint

UNCLASSIFIED MANAGER:
Afshin Rouhani, 408-630-2616

Coyote Creek Management Update

August 8th, 2017

Santa Clara Valley Water District

Coyote Creek Management

Levee Repair at Mobile Home Park

Coyote Creek Management

Trash & Debris Removal

Coyote Creek Management
Invasive Plant Removal

NPW1

- Old Oakland Road to Chessington Dr

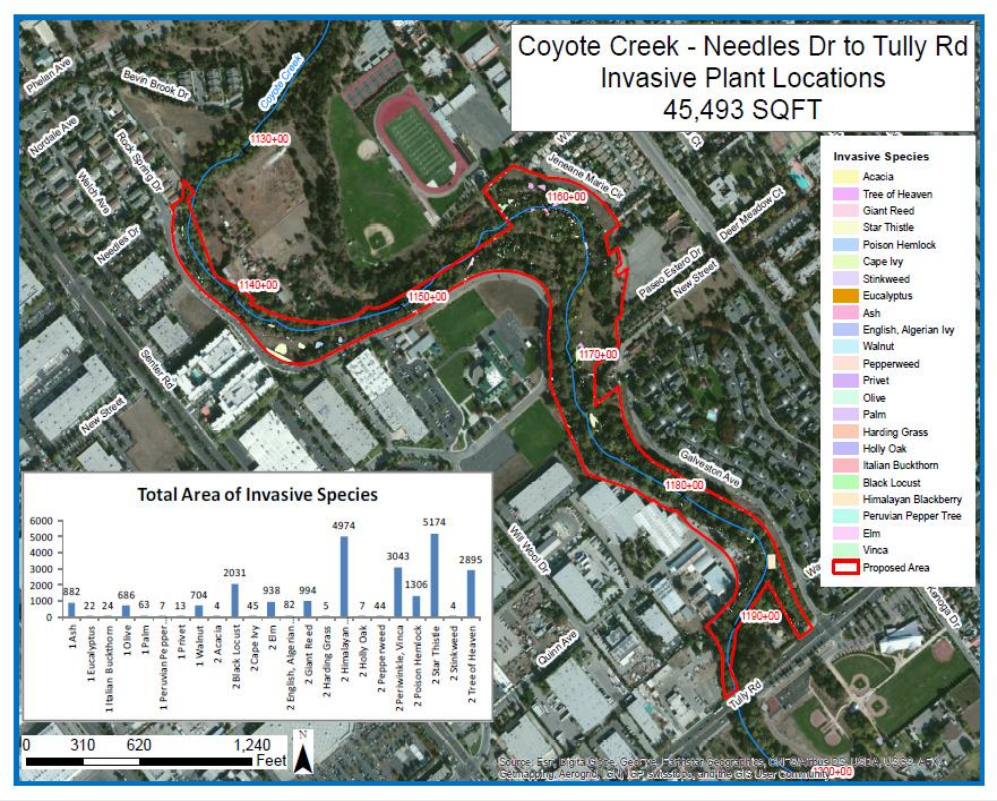

NPW2

- E San Antonio St to Hwy 280
- Needles Dr to Tully Rd
- Tully Rd to Yerba Buena Rd

Coyote Creek Management
Upcoming Work

- ✓ Trash & Debris removal on City of San Jose property
- ✓ Community Clean Up Day
- ✓ Construction of Temporary Flood Measures @ Rock Springs
- ✓ Additional Invasive Plant Removal under Safe Clean Water Priority D2.

Santa Clara Valley Water District

File No.: 17-0499

Agenda Date: 8/8/2017
Item No.: *4.5.

BOARD AGENDA MEMORANDUM

SUBJECT:
Homeless Encampment Ad Hoc Committee's Recommendations and Associated Staff Analysis from the Committee's May 15, 2017, Meeting.

RECOMMENDATION:

A. Consider and act on the following recommendations by the Board's Homeless Encampment Ad Hoc Committee:

1. When District-owned residential rental properties that were purchased for projects and not in-lieu become available and are deemed suitable by the District and applicable city, the Santa Clara County Office of Supportive Housing will be contacted to be given the first opportunity to consider the properties for housing for the homeless;

2. Approve utilizing a portion of net rental income from properties purchased through Watersheds (Fund 12) to fund the homeless encampment cleanup project and for development of a pilot program that focuses on the impacts of homeless encampments in each city where the net rental income is being utilized, with transfer or reallocation to begin in Fiscal Year (FY) 2020:

   i. Up to ninety (90) percent of each FY's net rental income will be utilized to fund the Safe, Clean Water and Natural Flood Protection Program Encampment Cleanup Project (SCW Project B4) through FY 2028; and

   ii. Up to 10 percent of each FY's net rental income will be utilized to develop a pilot program to help address waterway and stream stewardship impacts of homeless encampments in each city with Fund 12 District-owned residential rental properties, which will be implemented through FY 2021, at which time staff will assess the pilot program and return to the Board with a recommendation on whether to continue its implementation; and

3. Direct the Capital Improvement Program (CIP) Committee to review Recommendation A2's proposed transfer from Fund 12 to Fund 26 for Safe, Clean Water and Natural Flood Protection (SCW) Project B4 and the use of those Fund 12 funds for the pilot program to help address waterway and stream stewardship impacts of homelessness in light of other Fund 12 capital project funding needs; and return to the Board with a recommended annual transfer amount into SCW Project B4 to be implemented from FY 2020 to FY 2028 and for the pilot program from FY 2020 to FY 2021; and

B. If the Board approves Recommendation A1 above, then adopt the AMENDED AND RESTATED DISTRICT RESOLUTION RESCINDING RESOLUTION NO. 09-78 AND ADOPTING A PROCEDURE TO LEASE DISTRICT REAL PROPERTY, which modifies the District's leasing procedure to enable District-owned residential rental properties to be offered to the Santa Clara County Office of Supportive Housing for housing for the homeless.

SUMMARY:
The Board's Homeless Encampment Ad Hoc Committee (Committee) was established to allow for detailed discussion of homelessness and encampment issues with the public, governmental agencies, other assistance groups, and bring discussion and recommendations back to the full Board.

On April 11, 2017, the Board considered a number of staff recommendations to address the impacts of homeless encampments on local waterways. Because the Board sought the Committee's input before acting on staff's recommendations, staff presented the recommendations to the Committee on May 15, 2017. The Committee directed staff to present to the Board Recommendations A1, A2, and A3 above.

Recommendation A1
The Ad Hoc Committee's Recommendation A1 proposes that when District-owned residential rental properties that were purchased for projects and not in-lieu of carrying out a project become available and are deemed suitable by the District and applicable city, the Santa Clara County Office of Supportive Housing be given the first opportunity to consider the properties for housing for the homeless.

Types of District-owned Residential Rental Properties

Currently, there are two types of District-owned residential rental properties

1. Properties that were purchased for projects; and
2. Properties that were purchased in lieu of projects.

Properties for projects: The District primarily acquires residential properties for projects related to its purposes under the District Act. The bulk of these properties are acquired for flood protection projects, and the District leases these properties until the start of project construction is imminent. Under the Ad Hoc Committee's Recommendation A1, when such rental properties become available and are deemed suitable by the District, Santa Clara County's Office of Supportive Housing will be contacted to be given first opportunity to see if the properties will be conducive to provide housing for homeless. The County will work with the appropriate city to ensure the properties are suited for supportive housing.

To avoid project delays, the Ad Hoc Committee agreed that residential rental properties planned to be demolished within two years would not be considered suitable for this program.

The Board has declared surplus one property on South Sunset Avenue in the City of San José and it is slated to be sold as excess property. All remaining residential properties purchased for projects, except for one home on Steval Place in San José, are currently scheduled for demolition in 2018 and 2019, as per engineering and funding source estimates, and, therefore, not suitable for the program.

Properties in-lieu of projects: Sometimes, instead of constructing a capital project, such as one that would protect properties from flooding, the District may purchase the properties. These in-lieu properties are not slated for demolition and are maintained and leased by the District through a property management company. At present, there a total of 21 in-lieu properties comprised of the following:

- 19 residential properties are in the Waverly Park Community of Mountain View
- One on Twin Brook Drive in San José
- One on San Pedro Avenue in Morgan Hill.

Under the Ad Hoc Committee's recommendations, all the 21 in-lieu residential properties, including the 19 properties in Mountain View, will be excluded from being offered to the County for supportive housing.

If the Board adopts Recommendation A1 and a suitable residential rental property becomes available, District staff will work with the Santa Clara County Office of Supportive Housing to reach out to the city and the community. The County would then work directly with local jurisdictions, to ensure compliance with their ordinances and other regulatory requirements.

Furthermore, in the event there is an issue with a tenant (such as neighbor complaints about noise, upkeep of the premises, etc.), the County would be responsible for addressing the complaint and taking necessary remedial action, including evictions. Under this option, the District could require (through the lease) that the County be responsible for liability related to the County making District residential rental properties available to its clients, property damage issues, maintenance, evictions, complaints, etc.

Recommendation A2

SCW Project B4 - Encampment Cleanup Project

As reported in the FY2016 SCW Annual Report, there continues to be an increasing demand for District resources to address encampment cleanups along local waterways from cities and the community. These additional requests have significantly impacted the project's budget. This project does not have sufficient SCW funding allocated to accomplish the current level of demand for service beyond FY 2019.

To address this elevated level of demand and the overall issue of homelessness in the county, and to be able to continue to reduce trash and other pollutant loads that contaminate waterways and damage District facilities, staff recommends utilizing up to 90 percent of the net rental income from Watersheds Fund 12 District-owned residential rental properties to fund Project B4 between FY 2020 and FY 2028.

Additionally, Recommendation A2 addresses one of the draft findings of the Moss Adams SCW Independent Audit, reported to the Board as a non-agenda item on February 24, which recommends that the District should "consider seeking additional funding sources to ensure sufficient funding throughout the 15-year Safe, Clean Water Program because additional funds will be required to perform all the cleanups, which are vital for water quality."

Pilot program to help address the impacts of homelessness
While the human, social, economic, and environmental effects of homelessness affect our entire county, each community can experience very different impacts and needs.

The pilot program to help address the impacts of homeless encampments in each city with Fund 12 District-owned residential rental properties would currently apply to the cities of Mountain View and San Jose. District staff would work with representatives of each city to develop a pilot program addressing the impacts of homelessness in their city that align with the District's water resources management, flood protection and stream stewardship authorities, and that go beyond encampment cleanups.

The recommendation is to approve the development of such a pilot program funded by up to 10 percent of the net income from the Watersheds Fund 12 District-owned residential rental properties, to allow for the flexibility to test new and innovative approaches that align with the needs of each city's jurisdiction wherein those properties are owned.

Recommendation A3
CIP Ad Hoc Committee Review
The CIP Ad Hoc Committee reviews the capital project funding needs and project prioritization for Funds 12 and 26. By including the use of the net income from the Watersheds Fund 12 District-owned residential rental properties to partially fund the SCW Project B4 Homeless Encampment Cleanups and the pilot program to help address the impacts of homelessness, the CIP can assess the amounts that should be allocated while balancing the other demands on Fund 12.

The recommendation is for the Board to direct the CIP Ad-Hoc Committee to review Recommendation A2's proposed transfer from Fund 12 to Fund 26 for SCW Project B4 and the use of those Fund 12 funds for the pilot program to help address waterway and stream stewardship impacts of homelessness in light of other Fund 12 capital project funding needs; and return to the Board with a recommended annual transfer amount into SCW Project B4 to be implemented from FY 2020 to FY 2028 and for the pilot program from FY 2020 to FY 2021.

Recommendation B
If the Board were to accept the Ad Hoc Committee's Recommendation A1 above and offer the County the first chance to lease suitable vacant District residential rental properties, it would require the Board to revise District Board Resolution 09-78, which specifies the District's leasing guidelines, by adopting the revised and restated Resolution RESCINDING RESOLUTION NO. 09-78 AND

ADOPTING A PROCEDURE TO LEASE DISTRICT REAL PROPERTY. (Attachment 1).

Resolution 09-78 currently requires District residential rental properties to be advertised when they are available for rental, and requires a month-to-month lease arrangement. To eliminate any conflict, Board would need to rescind Resolution 09-78 and adopt a new resolution. The Amended and Restated Resolution addresses the issues mentioned above as well includes some clarifying texts.

FINANCIAL IMPACT:
Staff plans to notify the city where a residential rental property is located and available for lease to the County for purposes of providing shelter to homeless persons. To minimize potential loss of revenue, staff will immediately notify the city and request input as soon as the District's property management company receives a 30-day notice from the existing tenant of intent to vacate the residential property.

CEQA:
The recommended action does not constitute a project under CEQA because it does not have a potential for resulting in direct or reasonably foreseeable indirect physical change in the environment.

ATTACHMENTS:
Attachment 1: Resolution

UNCLASSIFIED MANAGER:
Melanie Richardson, 408-630-2035

BOARD OF DIRECTORS
SANTA CLARA VALLEY WATER DISTRICT

RESOLUTION NO. 17–

AMENDED AND RESTATED DISTRICT RESOLUTION RESCINDING RESOLUTION NO. 09-78 AND ADOPTING A PROCEDURE TO LEASE DISTRICT REAL PROPERTY

WHEREAS, Section 31 of the District Act states that the Board "shall be governed in the sale, lease, or other disposition of real property by the requirements of law governing that action by counties"; and

WHEREAS, Section 31 further states that the Board by "resolution [may] prescribe a procedure for the leasing of real property owned by the district alternative to the requirements of law governing counties"; and

WHEREAS, on February 14, 2012, the Board by Resolution No. 09-78 adopted a procedure to lease real estate property owned by the District; and

WHEREAS, Resolution No. 09-78 required that District residential real properties that are available to be leased be advertised in a manner that is reasonably competitive; and

WHEREAS, Resolution No. 09-78 also limited the tenancy of District residential real properties to a month-to-month lease; and

WHEREAS, where the District acquires real property to eliminate the need to construct a capital project, such acquisition is referred to in this amended resolution as a District in-lieu project; and

WHEREAS, as District residential real properties that are not part of a District in-lieu project become vacant, the Board seeks to make those residential real properties available to the County of Santa Clara (“County”) for lease at a fair market rental rate in support of the County’s affordable housing program that prioritizes housing the homeless (“Affordable Housing Program”); and

WHEREAS, if a District residential real property is not expected to be demolished within two years, the Board desires that the month-to-month lease limitation not be applicable to that property, and that it may be leased for a term of up to 12 months; and

WHEREAS, to the extent District residential real properties that are not part of a District in-lieu project are leased to the County in support of the Affordable Housing Program, the Board desires that those Residential Real Properties not be publicly advertised as available; and

WHEREAS, the Board desires to adopt this amended and restated resolution prescribing a procedure for leasing District residential and non-residential real property that the District does not have an immediate need for, where such procedure is different than the requirements of law governing counties for leasing real property.

NOW, THEREFORE BE IT RESOLVED, that the Board adopts the following general procedure to enable the Chief Executive Officer ("CEO") (or designee) to lease District non-residential and residential real property that the District does not have a short-term need for:

A. LEASING DISTRICT NON-RESIDENTIAL REAL PROPERTIES

For purposes of this amended resolution, District real property that is not "Residential Real Property" as that term is defined in Part B of this Resolution is deemed "Non-Residential Real Property".

When assessing whether to lease District non-residential real property to a tenant, the CEO (or designee) shall evaluate whether the District has a short-term need for it. If there is not a short-term need, the CEO (or designee) may lease the Non-Residential Real Property on behalf of the District subject to the following conditions:

1. Non-Residential Real Property made available to another public entity under a joint use lease agreement cannot be leased to another party.
2. The term of the Non-Residential Real Property lease agreement ("Non-Residential Real Property Lease") must not conflict with the District's future need for the Non-Residential Real Property.
3. Leasing the Non-Residential Real Property must not have a significant negative impact on streams, creeks, waterways, or other elements of the environment, and District Environmental Planning staff provides written affirmation of California Environmental Quality Act (CEQA) compliance prior to executing the Non-Residential Real Property Lease.
4. The Non-Residential Real Property Lease must provide the District with a right to terminate the tenancy at its convenience after providing the tenant with at least ninety (90) calendar days written notice.
5. Non-Residential Real Property available for lease is advertised in a manner that is reasonably competitive and at a fair market rental rate, except where a public purpose consistent with the District Act justifies leasing that the Non-Residential Real Property at fair market rental rate without advertising its availability, and all other Non-Residential Real Property leasing requirements set forth in this resolution are satisfied. Examples of such cases may include:

   A. Leasing landlocked (i.e., inaccessible from a public roadway) Non-Residential Real Property to a property owner or tenant with possessory interest in a parcel that is contiguous to the landlocked Non-Residential Real Property so long as the owner's/tenant's parcel has access to a public a public roadway.

   B. The Non-Residential Real Property is leased to a District construction contractor on a month-to-month basis to support a District capital project.

   In cases other than those described in 5 A and B, above, where it is unclear whether a public purpose consistent with the District Act may justify leasing the Non-Residential Real Property at fair market rental rate without advertising, staff will present the matter to the Board for clarification and/or direction.
6. The fair market rental rate of the Non-Residential Real Property is no more than $5,000 per month (Fair market rental rates greater than $5,000 per month require the approval of the Board).

7. The Non-Residential Real Property must be accessible from a public roadway or from the prospective tenant's land immediately adjacent to the Non-Residential Real Property.

8. The Non-Residential Real Property Lease requires the tenant to defend, indemnify and hold harmless the District, its directors, officers, agents, and employees from all claims, costs and liability arising out of tenant's use or possession of the Non-Residential Real Property.

9. The Non-Residential Real Property Lease requires the tenant to maintain comprehensive/commercial general liability insurance that is satisfactory to the District's risk manager.

10. If the Non-Residential Real Property contains a District administrative office building, pumping plant, or other building used for District purposes, it shall not be leased without the prior approval of the Board.

11. District staff inspects the Non-Residential Real Property on an annual basis.

12. If the District reasonably expects the presence of hazardous materials on the Non-Residential Real Property, a pre-lease environmental due diligence evaluation must be conducted at the proposed tenant's expense to determine whether hazardous materials are actually present on the Non-Residential Real Property.

13. Financial reports of the Non-Residential Real Property's income and expenses are made available to the Board at least annually.

B. LEASING DISTRICT RESIDENTIAL REAL PROPERTIES

For purposes of this amended resolution, the term "Residential Real Property" means any single-family residence, multiplex or apartment building not used primarily for commercial purposes.

When assessing whether to lease District residential real property to a tenant, the District CEO (or designee) must evaluate whether the District has a short-term need for the Residential Real Property. If there is no short-term need, the CEO (or designee) may lease the Residential Real Property on behalf of the District subject to the following conditions:

1. The term of the Residential Real Property lease agreement ("Residential Real Property Lease") must not conflict with the District's future need for the Residential Real Property.

2. The Residential Real Property is leased at a fair market rental rate.

3. The Residential Real Property is advertised in a manner that is reasonably competitive, except that Residential Real Property not part of an in-lieu project leased to the County in support of its Affordable Housing Program is not required to be advertised.

4. The Residential Real Property fair market rental rate is monitored on an annual basis, and if the fair market rental rate increases, the Residential Real Property Lease's rental rate must be increased accordingly.

5. The Residential Real Property shall only be leased on a month-to-month basis, except that Residential Real Property that is not part of an in-lieu project may be leased for an initial term of up to 12 months in support of the Affordable Housing Program so long as the Residential Real Property is not expected to be demolished within two years from the date it is leased or renewed.
6. The Residential Real Property is managed with a reasonable degree of care.
7. The Residential Real Property is leased and managed in accordance with all applicable federal, state, and local laws, including California's fair housing laws, which include but are not limited to, the California Fair Employment &Housing Act, Unruh Civil Rights Act, Ralph Civil Rights Act, Bane Civil Rights Act.
8. The Residential Real Property is accessible from a public street or roadway.
9. The Residential Real Property is used solely for residential purposes.
10. Financial reports of the Residential Real Property's income and expenses are made available to the Board at least annually.

C. RESTATED RESOLUTION

Resolution No. 09-78 adopted by the District Board on November 12, 2009 is hereby amended and restated in its entirety as set forth in this amended and restated resolution. This amended and restated resolution shall take effect immediately upon its adoption.

PASSED AND ADOPTED by the Board of Directors of Santa Clara Valley Water District by the following vote on August 8, 2017:

AYES: Directors

NOES: Directors

ABSENT: Directors

ABSTAIN: Directors

SANTA CLARA VALLEY WATER DISTRICT

By: _____
RICHARD P. SANTOS
Vice Chair/Board of Directors

ATTEST: MICHELE L. KING, CMC

_____
Clerk/Board of Directors

Santa Clara Valley Water District

File No.: 17-0557

Agenda Date: 8/8/2017
Item No.: *4.6.

powered by Legistar™

Santa Clara Valley Water District

MEMORANDUM

FC 14 (01-02-07)

TO: Board of Directors

FROM: Board Policy and Planning Committee

SUBJECT: July 24, 2017 Meeting Summary

DATE: 8/2/17

This memorandum summarizes the Board Policy and Planning Committee (BPPC) meeting July 24, 2017 where following workplan items were discussed and direction given to staff.

Provide Process Support for Board Policy Review

1. **Consideration of Board Workshop Regarding Potential Environmental Justice Policies:**
   The BPPC discussed the Board's request to incorporate language into the governance policies to document the need to ensure that disadvantaged communities get equal level of consideration in flood protection projects. The BPPC requested that staff research environmental justice theme policies of similar agencies, organizations (i.e., other special districts, VTA, County Health Service, etc.), and return with additional information to use as a guide, as well as look backwards and identify possible underserved communities where flood protection projects were not completed, as a lesson learned activity.

2. **Formalize in Board Policies the Board's Desire for Sensitive Design in District Projects:**
   The BPPC reviewed staff proposed new language for Board Governance which incorporates the Board's desire to document sensitive design in District projects. The BPPC approved for Board consideration, the proposed new E-1.6 Board Governance Policy language as presented in Agenda item 4.2, Attachment 1, for Board consideration, with one revision, remove "*When feasible*" and replace with "*As standard practice*," in the proposed E-1.6 policy language.

3. **Policy consideration for maintenance role and responsibility of the District on both District-owned and Non-District-owned, improved and unimproved/natural creeks and creek-side lands:**
   The BPPC received an update on the flood protection work matrix and a summary of current and future work in Coyote Creek. The BPPC directed staff to work with the Committee Chair to develop a presentation to include in the Board's August 8, 2017, Coyote Creek Board Ad Hoc Committee creation item, that will provide a summary and photos of work being performed on Coyote Creek, including creek maintenance work, easement requests from City of San Jose, etc.

Provide Ongoing Support for Board Planning Calendar

1. **Fiscal Year 2018 Board Policy and Performance Monitoring Calendars:**
   The BPPC reviewed the calendars and directed staff to meet with the Board Advisory Committee Chairs and ask them review the calendars and identify items in which they would like to engage and provide input.

   Thank you,
   Nai Hsueh, Director District 5 and BPPC Chairperson

Santa Clara Valley Water District

MEMORANDUM

FC 14 (01-02-07)

TO:	Board of Directors	**FROM**:	Pacheco Reservoir Exploratory Ad Hoc Committee
SUBJECT:	Pacheco Reservoir Exploratory Ad Hoc Committee July 12, 2017 Meeting Summary	**DATE**:	August 8, 2017

This memorandum summarizes the July 12, 2017, Pacheco Reservoir Exploratory Ad Hoc Committee Meeting.

The Pacheco Reservoir Exploratory Ad Hoc Committee received presentations on the following issues:

Agenda Item 4.1: Mr. Melih Ozbilgin, Sr Water Resources Specialist, presented an update on the progress of Pacheco Reservoir Expansion and Preparation for Proposition 1 Application with the following information:

- The project team has completed the WEAP modeling to finalize operational criteria for the expanded reservoir.
- Additional modeling is being done for the required uncertainty analysis.
- For the purposes of the Application, the new dam site would be located just upstream of the existing dam site. This site could result in a slightly higher total cost expectation since it would be a slightly larger dam. This site would provide a larger quantity of storage and would stay farther away from Henry Coe State Park during periods of full reservoir capacity.
- Various technical analyses as well as drafts of the Application sections have been initiated (see Attachment 1 Application Checklist with current progress). The project team believes they are on track to submit a quality application by the due date of August 14, 2017.
- The Communications Plan is continuously updated with progress, and outreach to various external stakeholders and interested parties is moving at full speed. The project team has reached out to all landowners potentially affected by the project, as well as several State and federal agencies, satisfying several of the requirements of the Application. Additionally, presentations are being made to city councils and other agencies, as part of our efforts to obtain letters and/or resolutions of support for the project, which will be submitted with the Application. This outreach effort will continue even beyond the Application deadline, as we expect to be able to provide additional declarations of support during the Commission's Application review period.

Ms. Rachael Gibson, Interim Deputy Administrative Officer reported that Government Relations will be setting up meetings, tours, briefings with California Water Commission, until the Application is completed.

Agenda Item 4.2: Mr. Garth Hall, Acting Chief Operating Officer (Water Utility) and Ms. Katherine Oven, Deputy Operating Officer (Water Utility Capital Division) presenting an update on the next steps of Pacheco Reservoir Expansion and Preparation for Proposition 1 with the following information:

- District staff and its team of consultants are working to complete the Proposition 1 Application (Application) to be submitted to the California Water Commission (CWC) by August 14, 2017. In parallel, District staff is identifying what project deliverables must be completed prior to statutory deadlines imposed by the Water Storage Investment Program, and is evaluating opportunities to save time and budget wisely.

- Showed the Committee the draft summary schedule showing the planning, design, and permitting stages of the Project. All three project phases must be initiated simultaneously, and significant work must be completed to meet the statutory deadline to complete draft California Environmental Quality Act (CEQA)/National Environmental Policy Act (NEPA) documents by January 2022. Multiple phases of field investigations may be necessary to finalize the location of the dam and initiate the feasibility-level design to complete the draft CEQA/NEPA documents. Biological surveys spanning multiple years, as well as cultural surveys, would have to be completed to initiate the lengthy Section 401/404 permitting process with the Regional Water Control Board and the U.S. Army Corps of Engineers.

- District staff is currently working on several high priority capital projects, and there are limited staff resources available to undertake the above described efforts. The District would have to rely on consultant services to proceed with design, permitting and environmental documentation. Staff recommends that the District initiate procurement activities in the Fall of 2017 to secure the necessary consultant services to perform this work. If the Committee agrees with this course of action, staff anticipates returning to the Board as soon as practicable with recommended consultant agreements for approval.

- Once the CWC issues its decision on funding the Project, staff will return to the Committee or the full Board with a recommendation on whether to proceed with the Project and if applicable, the recommended conditions over which work on the Project should continue.

The Committee took the following action:
The Pacheco Reservoir Exploratory Ad Hoc Committee recommends that the Board of Directors support a budget adjustment, if needed, for the Pacheco Reservoir Expansion Project and Preparation for Proposition 1 Application, Consultant Services, and other applicable costs associated with this project.

Agenda Item 4.3: Mr. Garth Hall, Acting Chief Operating Officer presented the Draft Resolution Required for the Proposition 1 Application with the following information:

- The Proposition 1 Application requires a resolution by the District's Board of Directors to authorize the filing of the application, agree to enter into an agreement with the State to receive the funding, and authorize a designee to proceed with the overall process. This resolution will be placed before the full board on July 25, 2017 (staff will update with suggestions made by the Committee prior to 7/25/17).

Staff will be sending the Committee weekly updates of the At-A-Glance Pacheco Reservoir Expansion Project - Communications Plan until Application is completed-August 14, 2017.

If you have any questions or concerns, you may contact me, gbrambill@valleywater.org or 1.408.630.2408.

Thank you.

Glenna Brambill, Management Analyst II,
Board Committees Liaison
Office of the Clerk of the Board

Santa Clara Valley Water District

MEMORANDUM

FC 14 (01-02-07)

TO:	Board of Directors	**FROM**:	Agricultural Water Advisory Committee
SUBJECT:	Agricultural Water Advisory Committee Meeting Summary for January, April and July 2017 meetings	**DATE**:	August 8, 2017

This memorandum summarizes meetings the Agricultural Water Advisory Committee held for January, April and July 2017.

January 9, 2017, Meeting:

Election of Chair and Vice Chair:

Mr. Mitchell Mariani was elected Chair for 2017.
Mr. David Vanni was elected Vice Chair for 2017.

Agenda Item 5.1: The Committee reviewed and approved the 2016 Annual Accomplishments Report for presentation to the Board.

Agenda Item 5.2: Ms. Vanessa De La Piedra (Groundwater Management Manager) presented information on the Water Supply Update and Drought Response with the following information:

- Current water supply conditions and District drought response activities are summarized in the following monthly reports that were included with the meeting packet: Drought 2016 Monthly Status Report, Water Tracker, and Groundwater Condition Report.

- On June 14, 2016, the District Board of Directors adopted a resolution calling for a 20 percent reduction in water use compared to 2013, and a limitation on outdoor watering of ornamental landscapes or lawns with potable water to three days per week through January 31, 2017. Due to improved water supply conditions, this call was a reduction from the 30 percent reduction and two day per week outdoor watering call issued in 2015. The call for 20 percent was based on current water supply conditions, projections of water use and supply in 2016, and is consistent with the District's Water Shortage Contingency Plan.

- In response to the ongoing drought, the District held two Summits in 2015, one with elected officials and one with staff from local water suppliers, to discuss potential drought response efforts and improve collaboration. Several recommendations emerged, including more consistent policy throughout Santa Clara County. In response, District staff has participated with representatives from local cities, the county, Sustainable Silicon Valley, and Joint Venture Silicon Valley on a Task Force to draft water efficiency guidelines for new developments. The idea was to set the bar even higher in terms of water use efficiency. Language for alternate supplies such as graywater, rainwater harvesting, and on-site reuse was incorporated. The Task Force has completed an administrative draft (Attachment 4) and is currently seeking comments from interested stakeholders. Outreach efforts will include sharing the draft ordinance with the following entities:

  - District Board of Directors' Water Conservation & Demand Management Committee (December 2016)
  - Santa Clara County building officials (December 2016/January 2017)
  - District Water Retailers Committee (December 2016)
  - Santa Clara County City Managers Association (January 2017)
  - Cities Association of Santa Clara County (January 2017)
  - District Board of Directors' Water Commission (January 2017)

- District Board of Directors' Agricultural Water Advisory Committee (January 2017)
- District Board of Directors' Environmental Water Resources Committee (January 2017)

Agenda Item 5.3: Mr. Brian Mendenhall (Project Manager) reviewed the Riparian Ordinance Report with the following information:

- Riparian Corridor is a term used in watershed management to address the land next to a stream that is vegetated, usually with trees and shrubs, that serves as a protective filter for streams. The riparian corridor is also an area that provides food, cover and protection to fish and other wildlife.

- The District does not have land use authority. Hence, it cannot require riparian setback. However, the District may work through its integrated water resources management approach, the One Water Plan, to coordinate with other public agencies to manage the riparian area.

  Current Practices in Riparian Corridor Protection

- Protection of the riparian corridor is currently being achieved through three primary measures in Santa Clara County: 1) Guidelines and Standards for Land Use near Streams; 2) specific policies on riparian protection per general plans; and 3) the Santa Clara Valley Habitat Conservation Plan (VHP).

- The cities in Santa Clara County (County), County, the District, and several other agencies and nonprofit organizations formed the Water Resources Protection Collaborative in the early 2000's to discuss riparian buffer protection. As a result the Guidelines & Standards for Land Use Near Streams were produced in 2006, aiding municipalities in their creation of riparian protection policies within their general plans. To date, most cities and the County have adopted ordinances or resolution to protect the riparian corridor. Some of these policies are presented in the PowerPoint presentation. These policies provide a general guideline, not law or regulation, for the agencies to follow. In 2012, the Santa Clara Valley Habitat Conservation Plan developed riparian setback requirements by which the participating agencies, including San Jose, Morgan Hill, Gilroy, County and the District have to abide.

- In order to provide additional protection of the riparian corridor, it will be necessary to identify what shortcomings existing policies have, and to identify which components of riparian corridors are under stress so that new policies, programs, and studies may be considered to aid in improvements of these areas. Improved protection may also be achieved through the adoption of ordinances, expanding existing riparian protection policies, and considering adding riparian buffers and enhancements to policies.

- Riparian Corridors At Risk
  It is no secret that riparian corridors and the streams within are at risk in Santa Clara County. Population growth, increased development, homelessness, and climate change are all factors negatively affecting these areas. Fortunately there is positive work being carried out by municipalities, stakeholder groups, the District, and the community at large to improve upon water supply, flood protection, and stewardship aspects related to riparian corridors.

- The District Hydrology and Hydraulics unit is in the process of updating hydrologic and hydraulic models for each of the County's five major watersheds. This process will aid in the District's understanding of how flows affect each stream within those watersheds and to some extent the riparian area around those water ways.

- The riparian habitat may be adversely affected if development encroaches into the area needed for wildlife or vegetation. The riparian corridor may also suffer when the creek channel is incised through increased discharges as a result of accelerated surface runoff and concentrated stormwater flows to the creek. The District is currently conducting analysis of stream health using the California Rapid Assessment Method.

  Efforts to Identify and Improve Upon Riparian Corridor Needs (Afshin)

- Through the District's One Water Plan, several tools/processes are being reviewed and utilized to better identify riparian needs and then evaluate and prioritize opportunities for protection and improvement. Methods currently being considered include Historical ecology, ecosystem services valuation, conducting

additional studies to help understand stream and riparian corridor conditions, watershed visioning with San Francisco Estuary Institute (SFEI), and geographic information system (GIS) analysis using designated riparian buffers including those defined by the VHP.

- GIS analysis on a watershed scale enables the District to better comprehend the environment on a systemic level rather than a project-based level. Part of this is looking at what is happening within buffers of the stream, such as land use, flood risk, habitat types, and water supply operations. Once we have a more complete picture of conditions, stakeholders, and opportunities, the One Water Plan can move from planning to implementation.

- With passage of the Safe, Clean Water and Natural Flood Protection program in November 2012, the District introduced the idea of Stream Corridor Priority Plans (SCPPs) under Project D3. These SCPPs are intended to help prioritize important work to preserve, protect and improve habitat within riparian corridors. While development of SCPPs is just beginning, components deemed necessary include invasive plant removal, native vegetation planting, gravel augmentation, large woody debris installation, fish barrier removal and water quality improvements. Water supply and flood protection considerations may also be pertinent as they can impact the successful functioning of processes within the riparian corridor. Because all of these components are also considered in the One Water Plan, the two will follow a similar schedule over the next several years.

Agenda Item 5.4: Ms. Glenna Brambill (Management Analyst II) reviewed the Agricultural Water Advisory Committee work plan and the Committee's next meeting agenda and the Committee took action and requested an update on the One Water Plan at their upcoming April 3, 2017, meeting.

Chair Mariani adjourned the meeting in memory of Mr. Ciro Marfia and Mr. George Chiala well known farmers of South County.

The Committee had a tour of the Silicon Valley Advanced Water Purification Center.

April 3, 2017, Meeting:

Agenda Item 4.1: Mr. Darin Taylor (Chief Financial Officer) reviewed the Fiscal Year 2017-2018 Proposed Groundwater Production Charges with the following information:

- Staff recommended up to an 6.4% increase in the Agricultural groundwater production charge for FY 2017–18. With recent improvements in the state's water supply picture, our focus turns to driving progress on vital infrastructure upgrades. Allowing critical water supply assets like Anderson Dam to fail is not an option. The proposed maximum groundwater production charge increase for FY 2017-18 will help drive progress on the Anderson Dam Seismic Retrofit project, which will help ensure public safety and bolster future water supply reliability. The Board is seeking input with regard to staff's groundwater production charge recommendation for FY 2017–18.
- The Committee approved supporting the Fiscal Year 2018's proposed groundwater production charges.

Agenda Item 4.2: Mr. Brian Mendenhall (Project Manager) reviewed the One Water Plan – April 2017 Update with the following information:

- This item is being brought before the Agricultural Water Advisory Committee based on expressed interest in the One Water Plan. One Water is the District's integrated water resources master plan, providing a 50-year roadmap for improved water resources management in Santa Clara County. This update will discuss coordination with additional planning efforts that consider agriculture in the county; challenges and constraints for water resources management; opportunities for improvement in water resources management, and next steps including stakeholder engagement in areas with greater concentration of agricultural production. The project team requests Committee member comments on the work to date, as well as recommendations and ideas regarding opportunities for better water resources management, especially on or near agricultural lands.

One Water

- Master planning efforts to date under One Water have resulted in a framework of goals, objectives and strategies, metrics associated with the objectives, a draft countywide report with identification of large scale programs and projects for further consideration, and a comprehensive list of District and stakeholder input regarding opportunities in Coyote Watershed.

- While stakeholder engagement was primarily done through a centralized Stakeholder Work Group (SWG) over the last two years, additional input was sought from municipalities and areas the District felt required additional representation, including community groups and agricultural representatives. For the latter, we presented to this Committee in July 2016 and to the Santa Clara County Farm Bureau in January 2017.

Related Efforts

- Due to the multi-faceted nature of the One Water Plan it is not difficult to identify relevant planning efforts for coordination in our county. A few that have a substantial connection to One Water and to the agricultural element include: Pajaro Compass, Valley Greenprint, and the Climate and Agricultural Preservation Program (CAPP). All three efforts included stakeholder engagement and are multi-objective, and may lead to future partnerships that support One Water.

Pajaro Compass

- A planning effort looking to utilize volunteer conservation to increase the scale and pace of conservation in the Pajaro Watershed, which includes lands within Santa Clara County up to Morgan Hill. The effort not only overlaps the Uvas-Llagas watershed that the District identifies with, but also considers similar One Water planning topics such as water resources, agriculture, climate change, and biodiversity.

Valley Greenprint

- Major planning document prepared by Santa Clara Valley Open Space Authority (Authority). The plan led to the passage of a ballot measure, Measure Q, and funding for future conservation and water resource planning activities. The Greenprint includes several aspects like that of One Water (e.g., water resources, wildlands, recreation) and focuses in part on farms, ranches, and other working lands. This plan is leading to specific partnership activities between the Authority and District in the Coyote Valley area of San Jose.

Climate and Agricultural Preservation Program (CAPP)

- CAPP is a new program being led by Santa Clara Valley Open Space Authority and County of Santa Clara. The geographic focus is Coyote Valley to the San Benito County Line. The objective of the program is to use grants to work on policies to protect lands for agriculture and consider ways for increased agriculture viability. More specifically the program will strive to develop 1) a land use policy framework; 2) economic development strategies; and 3) regional awareness and branding programs for agriculture in the region. The program is important to One Water because it will look at land use in two of the five major watersheds the District is considering, look at land use near streams in some cases, and has the potential to improve water resources management by preserving pervious surfaces.

Challenges and Constraints

- One Water has taken the approach of identifying a comprehensive list of challenges and constraints across the County and now for Coyote Watershed. The challenges are not new but are being captured in a single document as they relate to the many facets of water resources, including agriculture, ecological resources, flood risk reduction, landscape resources (open space, trails and recreation), water quality, and water supply.

- Challenges identified that may impact or are impacted by agricultural properties and practices include: water quality impairments, flooding, water supply and demand, wildlife movement, and recreational access. In addition to these water resource challenges, climate change and development pressures present challenging circumstances. In many cases these identified challenges may be met with inventive strategies and addressed as new opportunities through a cooperative approach.

Opportunities

- New activities to address challenges are being classified as opportunities under One Water. Initial concepts, ideas and considerations are called opportunities until they are further developed into site-specific projects and programs that may be specified, prioritized and recommended for future action. These opportunities are being viewed in light of three central constructs: 1) activities are considered on a

watershed basis; and 2) activities are formulated as integrated and multi-objective; and 3) activities meet One Water objectives and have the potential to improve watershed health as delineated by designated metrics.

- For Coyote Watershed, over 320 opportunities were documented from numerous stakeholder meetings and District staff coordination. These were then filtered to a list of 65 opportunities that were more site specific. Of these 65, eight themes have emerged as general categories. These themes are included below along an example of how they relate to agricultural property and working lands.

• **Theme**	• **Agriculture/Working Lands related issue**
• Reduce flood risks	• Flooding benefit of pervious surfaces • Flood risk for infrastructure and certain types of crops
• Protect and add new groundwater recharge	• Pervious surface/undeveloped land as an opportunity for infiltration and potentially recharge
• Acquire and protect lands	• Preservation of farmland/rangeland for multiple benefits
• Restore and enhance habitat	• Open space for wildlife corridors and healthy riparian corridors
• Improve water quality conditions	• Open space as a buffer to riparian areas with appropriate setbacks
• Reduce sedimentation	• Open space as a buffer to riparian areas with appropriate setbacks
• Install green infrastructure/stormwater improvements	• Opportunity for regional stormwater capture
• Complete trail reaches	• Open space for trail network connectivity where feasible and not a conflict with operations

Next Steps

Next steps for One Water include:

- Discussion with District Board of Directors on policy issues related to One Water
- Analysis of mapped opportunities and additional data sets to identify priority integrated projects in Coyote Watershed
- Development of watershed-based targets for each objective and metric in One Water
- Preparation of a Coyote Watershed report

Agenda Item 4.3: Ms. Glenna Brambill (Management Analyst II) reviewed the Agricultural Water Advisory Committee work plan and the Committee's next meeting agenda and the Committee took action and requested adding an update of the District's Asset Management Plan to their workplan.

July 10, 2017, Meeting:

Agenda Item 4.1: Ms. Charlene Sun (Treasury and Debt Manager) reviewed the Socially Responsible Investment Policy with the following information:

- Per the Board Policy and Planning Committee's request for information regarding the principles of socially responsible investment policy, this report summarizes the general principles, how it has been implemented in other local agencies, and staff's recommendation on how such principles can be incorporated into the District's Investment Policy.

- The Government Finance Officers Association (GFOA) defines Socially Responsible Investing (SRI)[1] as an investment approach where certain sectors or business activities are excluded from the portfolio through negative screening for moral, ethical, environmental, social, and governance (ESG) reasons. Examples of implementing SRI include impact investing in projects, companies, funds or organizations with the express goal of generating and measuring mission-related social, environmental, or economic change alongside financial return, as well as divestment of specific business sectors or companies that do not comply with the SRI principles (e.g. divestment of fossil fuel companies). The ESG factors that are currently commonly considered include the following:

- **Table 1: ESG Factors**

• Environmental	• Social	• Corporate Governance
Climate change	Stakeholder relations	Board composition
Energy & material efficiency	Labor relations	Executive compensation
Waste management	Working conditions	Shareholder rights
Air quality/pollution	Health and safety	Accountability & audit quality
Water use & management	Supply chain management	Transparency
Chemicals	Product safety	
Land use management	Treatment of customers	

- Implementing SRI have financial and non-financial impacts. The financial impacts include assessing ESG factors to optimize risk-adjusted returns, influencing corporate behavior to enhance long-term outcomes, and contributing to the integrity of the financial market. The non-financial impacts include assessing the long-term investment horizon to reflect concerns and values of stakeholders and managing the reputation and business risk of the organization.

- Additional research on sustainable investing principles are summarized in the report 'The 21st Century Investor: CERES Blueprint for Sustainable Investing"[2] ("Blueprint"). The Blueprint summarizes ten action steps for sustainable investment strategy:

  1. Establish a commitment to sustainable investment through a Statement of Investment Beliefs
  2. Establish board level oversight of sustainability policies and practices
  3. Identify sustainability issues material to the fund
  4. Evaluate material sustainability risks to the portfolio
  5. Integrate sustainability criteria into investment strategies
  6. Require sustainable investment expertise in manager and consultant procurement
  7. Evaluate manager performance against sustainable investment expectations
  8. Establish engagement strategies and proxy voting guidelines consistent with sustainable investment goals
  9. Support policies and market initiatives that promote a sustainable global economy
  10. Integrate sustainable investment approaches across all asset classes and strategies.

<u>Local Agency Investment Practices</u>

- Per a March 26, 2014 report on local government efforts to implement socially responsible investment policy prepared by the City of Portland[3], 23 local government agencies were contacted for a survey on social responsibility investment practices. Of the 11 responses received, six agencies reported they have documented social criteria in their investment policies, and five agencies do not apply social criteria. Additionally, six of the 11 agencies do not invest in corporate securities, thus limiting their investments to U.S government securities. Of note are the City and County of San Francisco and Denver and Harvard University who have adopted formal social responsibility criteria in its investment policy (Appendix A).

[1] http://gfoa.org/sites/default/files/SRISlides_0.pdf

[2] https://www.ceres.org/resources/reports/the-21st-century-investor-ceres-blueprint-for-sustainable-investing/view

[3] https://www.portlandoregon.gov/omf/article/494707

District Investment Policy

- In accordance with Executive Limitation 4.9 regarding treasury and investment management, and pursuant to Title 5, Division 2, Part 1, Chapter 4, Articles 1 and 2 of the California Government Code, as amended from time to time (the "Government Code"), the District Board of Directors annually adopts the resolution delegating authority to deposit and invest funds to the Treasurer or her designee and approves the Investment Policy in May of each year for implementation on July 1 of each new fiscal year. The FY 2017-18 Investment Policy was approved by the Board on May 9, 2017.

- Given the various limitations imposed by the Government Code on allowable investments, should the Board determine it's in the District's best interest to incorporate socially responsible investment policy, staff recommends adding social responsibility as an additional investment objective in Section 3.4 of the District Investment Policy:

  3.4 In addition to the investment objectives of safety, liquidity, and yield, the District shall not invest in corporate securities and banking institutions that do not meet the ESG factors outlined in Table 1 (above). The Investment Committee[4] shall follow the ESG Guiding Principles (Appendix B) to evaluate and approve such investments to ensure compliance with the ESG factors.

- The proposed amendment of the District Investment Policy would be subject to Board approval, to be agendized after staff has received comments from the Board Advisory Committees.

Financial Impact

- Staff estimates the potential financial impact of implementing the socially responsible investment policy is between $9,000 to $200,000 in lower annual interest earnings due to divestment of such corporate and banking securities that are not in compliance with the ESG Guiding Principles. (For further information, please contact Darin Taylor, Chief Financial Officer, at 408-630-3068)

Appendix A - Local Agency Investment Practices

A. CITY AND COUNTY OF SAN FRANCISCO OFFICE OF THE TREASURER & TAX COLLECTOR INVESTMENT POLICY

Effective May 2016

1.0

http://sftreasurer.org/sites/default/files/Investment%20Policy.pdf

13.0 Social Responsibility

In addition to and subordinate to the objectives set forth in Section 4.0 herein, investment of funds should be guided by the following socially responsible investment goals when investing in corporate securities and depository institutions. Investments shall be made in compliance with the forgoing socially responsible investment goals to the extent that such investments achieve substantially equivalent safety, liquidity and yield compared to investments permitted by state law.

13.1 Social and Environmental Concerns

Investments are encouraged in entities that support community well-being through safe and environmentally sound practices and fair labor practices. Investments are encouraged in entities that support equality of rights regardless of sex, race, age, disability or sexual orientation. Investments are discouraged in entities that manufacture tobacco products, firearms, or nuclear weapons. In addition, investments are encouraged in entities that offer banking products to serve all members of the local community, and investments are discouraged in entities that finance high-cost check-cashing and deferred deposit (payday-lending) businesses. Prior to making

[4] Per the District Investment Policy, the Investment Committee members include the Chief Operating Officer - Administration, Chief Financial Officer, District Counsel, the Accounting Manager, and the Treasury and Debt Manager.

investments, the Treasurer's Office will verify an entity's support of the socially responsible goals listed above through direct contact or through the use of a third party such as the Investors Responsibility Research Center, or a similar ratings service. The entity will be evaluated at the time of purchase of the securities.

13.2 Community Investments

Investments are encouraged in entities that promote community economic development. Investments are encouraged in entities that have a demonstrated involvement in the development or rehabilitation of low income affordable housing, and have a demonstrated commitment to reducing predatory mortgage lending and increasing the responsible servicing of mortgage loans. Securities investments are encouraged in financial institutions that have a Community Reinvestment Act (CRA) rating of either Satisfactory or Outstanding, as well as financial institutions that are designated as a Community Development Financial Institution (CDFI) by the United States Treasury Department, or otherwise demonstrate commitment to community economic development.

B. CITY AND COUNTY OF DENVER DEPARTMENT OF FINANCE – CASH, RISK CAPITAL FUNDING INVESTMENT POLICY

https://www.denvergov.org/content/dam/denvergov/Portals/344/documents/crcf/Investment_Policy.pdf

P. SOCIAL RESPONSIBILITY

The City and County of Denver will make its best efforts, with the resources available, to ensure that it does not participate in an ownership or capital-providing capacity with entities that;

1. Directly or indirectly participate in or support activities that do not have respect for human rights around the world; or

2. Are conducting business with a terrorist-sponsoring State

C. Harvard University

https://responsibleharvard.com/the-fair-harvard-fund/investment-policy-statement/

This Investment Policy Statement (or "IPS") has been adopted by the Investment Committee of the Fair Harvard Fund (the "Fund"). The IPS summarizes an investment philosophy and approach thought best to meet the Fund's long-term return goals and investment principles at an appropriate level of risk. It is designed to provide a framework to help guide the Committee, investment managers and other parties involved in advising the portfolio, in setting objectives, selecting and monitoring portfolio investments, diversifying assets and evaluating performance.

Negative Screens: Investment managers must avoid investment in companies significantly involved in the production or sale of fossil fuels and tobacco. To the extent possible while maintaining adequate diversification, investments in companies involved in the production and distribution of the following should also be avoided:

- Oil, gas, and other fossil fuel sources
- Nuclear power
- Pornography
- Gambling

- Weapons and/or firearms
- Genetically modified organisms in agriculture
- Factory farming of meat or fish

Further, investment managers should seek to exclude investment in companies with a demonstrated record of the following:

- poor practices with respect to environmental regulation, greenhouse gas emissions, toxins, hazardous waste or environment justice
- human rights abuse, violations of international law, and/or materially or otherwise supporting repressive regimes
- endangering rural people's access to the land, water and other resources on which their livelihoods depend
- violating labor laws, abusing or otherwise mistreating workers and/or preventing or impeding unionization
- discrimination based on sexual orientation, gender, race, ethnicity, age or disability
- practices which have significant negative effects on affected communities, particularly those with minority or low-income residents
- restriction of access to affordable medicine in the developing world

Positive Screens: Consistent with a need for adequate liquidity, diversification and investment minimums seek out companies involved in the production of renewable energy and organic food, local food and sustainable agriculture and generally, invest in companies and investments that demonstrate commitment to:

- environmental sustainability, including reducing greenhouse gas emissions and sustainable forestry
- community development and/or investment, particularly in communities with minority or low-income residents
- diversity in hiring, executives and boards with respect to sexual orientation, gender, race, ethnicity
- living wages for all employees and collective bargaining
- transparency and accountability in corporate governance

Appendix B – District Investment Committee ESG Guiding Principles

When evaluating potential investments in corporate and financial institution securities, the Investment Committee shall follow the guiding principles:

Negative Screens: No investments shall be made in companies significantly involved in the production or sale of fossil fuels, tobacco, and other products that are environmentally harmful. Furthermore, to the extent possible while maintaining adequate safety, liquidity and yield of the portfolio, no investments shall be made in companies with a demonstrated record of the following:

- poor practices with respect to environmental regulation, greenhouse gas emissions, toxins, hazardous waste or environment justice
- human rights abuse, violations of international law, and/or materially or otherwise supporting repressive regimes
- endangering rural people's access to the land, water and other resources on which their livelihoods depend
- violating labor laws, abusing or otherwise mistreating workers and/or preventing or impeding unionization
- discrimination based on sexual orientation, gender, race, ethnicity, age or disability
- practices which have significant negative effects on affected communities, particularly those with minority or low-income residents
- restriction of access to affordable medicine in the developing world

Positive Screens: To the extent possible while maintaining adequate safety, liquidity and yield of the portfolio, investments shall be made in companies involved in the production of renewable energy and organic food, local food and sustainable agriculture and generally, invest in companies and investments that demonstrate commitment to:

- environmental sustainability, including reducing greenhouse gas emissions and sustainable forestry
- community development and/or investment, particularly in communities with minority or low-income residents
- diversity in hiring, executives and boards with respect to sexual orientation, gender, race, ethnicity
- living wages for all employees and collective bargaining
- transparency and accountability in corporate governance

The Committee recommended that the Board not adopt the Socially Responsible Investment Policy. Staff has duly noted the committee's recommendation and will gather more feedback for the Board from the Water Commission and Environmental and Water Resources Committee (EWRC).

Agenda Item 4.2: Mr. Marty Grimes (Program Administrator) and Mr. Jose Villarreal (Acting Communications Manager) reviewed the Santa Clara Valley Water District Communications and Community Engagement Program Update with the following information:

This update gave the Agricultural Water Advisory Committee information on current and future communications efforts to support the District Board of Directors in establishing key linkages between the District and the community in order to accomplish Board Policy GP-3.1 which states that "the Board will produce the link between the District and the public."

Per Ends Policy 1.2, the District's communications goal is to communicate the District's programs, projects and challenges to the community, effectively and transparently, in order to foster public engagement.

Improvements in Coordination

District Communications and Community Engagement Program has been restructured. The unit is now under the direction of Chief of External Affairs, Rick Callender, who also oversees the District's Office of Government Relations. This joining of the two units under one manager has improved coordination between Communications and Government Relations.

The joining of Communications with Government Relations has resulted in the sharing of resources and employees, for instance, with Communications helping produce talking points when needed, and Government Relations providing more people to draw upon for emergency communications. That has been especially important during this winter, when heavy rains and flooding called for increased visibility and media access.

Connection between the two units has increased, allowing a better understanding of each unit's activities and the opportunity to synchronize strategies and tasks.

Activities and Plans

Improved coordination has also allowed the units to provide better support for the Board of Directors through increased awareness of activities throughout the county. While the education and volunteer programs have remained under a separate manager, they are expected to reunite with Communications and Government Relations under the new Chief of External Affairs, providing a more cohesive, one-stop-shop for Board members to reach their constituents and to hear from the people in their districts.

We continue to develop the Speakers Bureau program, recruiting more staff to give presentations about the District to community groups. Before offering the speaking opportunity to staff, however, we offer it to Board members. We plan to increase outreach for this program this year.

Other actions the unit has taken in the last six months and that are planned for the near future will continue to offer the Board members support in creative and useful ways.

Branding
Image and reputation are important to an organization's ability to accomplish its work. A positive view of the District by the public makes it easier for the District to obtain funding as well as community and stakeholder support for various projects to protect water quality and supply and to provide flood protection.

With that in mind, the District needs to consider what image it wishes the public to conjure at the mention of its name. Beyond the vision and mission of the District, and more than a slogan, the Santa Clara Valley Water District's brand needs to convey our purpose and our value to the public. A strong brand also allows the *District*, especially the Directors, as they conduct outreach in their districts, to set the tone and impression through consistent messaging, rather than passively allowing others to describe us and by default set our brand for us.

The District will promote the brand through a variety of means, including providing on-message materials such as talking points, presentations and publications to Board members, an ad campaign, blog posts relating to the brand theme, videos, pitches to the media, and more.

This effort will take careful planning and thought, and will start with an assessment of the current image of the District among the public. The next step is to identify the desired brand image the District would like to be known for. For a branding initiative to be successful, the desired brand must reflect attributes that accurately describe the District. For example, if our desired brand image is one of "fiscal responsibility," we must be able to truly demonstrate our fiscal responsibility.

Staff will return to the Board in summer with branding options that incorporate the results of the public opinion survey. Once a brand identity is identified, it should be reflected in a wide array of communications efforts.

Reputation and trust campaign
Informing the branding effort will be a year-long campaign (July 2017-July 2018) to improve the public's perception of the District.

This effort has begun with a poll, due in June, which will help us understand what people think about the District and what messages resonate with the public. The campaign will involve the entire organization working through an internal working group. The working group will help determine what strategies to use, particularly for an external campaign. The Board's leadership will also be valuable in shaping a message-driven District and connecting with the community. Results will be shared with the organization along with messages to be incorporated in all external communications.

Water Truck
In addition to branding, staff is working on designs for the water truck that was included in the FY 17 budget and will be delivered in the coming weeks. There are a few choices including the District's Value of Water campaign images; images from the Value of Water Coalition's campaign, a resource provided by the U.S. Water Alliance to build will for investment in water infrastructure and resources; and images promoting the District's high-quality water.

In the interim, the unit will seek employee input on the design.

Redesign of Web
The District has finalized a contract with a vendor to redesign the external website, to modernize it, organize information better and make it more user-friendly for the public. The District's website is an extensive repository for information that can help the public and employees, and the redesign will make that information more accessible, as well as showcase the District's stories.

As an example, in response to Board members' requests, we are working with other units to make it easier for the public to find flood information on the website, including real-time data during storms, and to ensure that that information is understandable by the public.

Staff will present an update on the redesign at the next communications presentation.

Media Relations
News media opportunities are offered to the Board chair, and in each district, we offer the Director for that district the opportunity to speak to the media and answer their questions. Staff continues to coordinate subject matter experts.

We also support the Board with a monthly guest column for their use, as well as producing letters to the editor and op-eds.

This winter has been a particularly busy one for media. The issue with the spillway at Oroville Dam focused media attention on all dams, including significant interest in the unrestricted and restricted capacity of Anderson Dam as well as its seismic stability.

Flooding in San Jose along Coyote Creek heightened that interest, and the intense volume of media inquiries caused by the floods led the unit to hire Singer Associates, a crisis communications firm, to assist in managing media inquiries and getting the District's message out to the community about the District's role in assessing and preventing flooding to the extent possible.

The transition from the drought to flooding has been intense, and the resulting media scrutiny has mirrored that intensity. The joining of Communications and Government Relations has helped provide a deeper bench of people available to disseminate important messages, and the change in procedure to offer opportunities to Board members has allowed the District to provide higher-level information to reporters.

Reaching all the people in the county is a priority for the District, and our working relationships with ethnic media outlets help us to expand the communities we touch. We will continue to work with these partners, and offer opportunities to the Board members to work with them as they arise.

While the recent winter has dramatically improved the current water supply outlook, the District remains focused on long-term water conservation needs and the promotion of water conservation as California's way of life. The 2016 Value Our Water campaign will continue in 2017 with additional elements to promote an on-going commitment to using water wisely.

Flood awareness
As part of its annual effort to raise awareness about the potential for flooding in Santa Clara County, the District conducted a flood awareness campaign that included radio and online ads, print ads in ethnic media, mall and transit shelter posters, billboard messages, Nextdoor messages, and boosted Facebook posts. There were also three targeted e-mail messages delivered to homeowners in floodplains on behalf of Chair Varela.

At the time of this agenda memo, the media buyer had not yet provided a final campaign report. Preliminary results of the paid media portion of the campaign indicate a total of 28 million impressions, up from the 24 million reported last year. The campaign launched the first week of January, with radio alerts timed to coincide with stormy weather, and ran through April 2017, with the heaviest messaging during the months of January through March.

This winter's flooding and extensive rains have prompted us to devise new ways of reaching more people with our flood preparedness message. Contingent upon budget approval, we anticipate taking a more grassroots approach to flood awareness, especially in areas impacted by flooding. For example, we plan to do tabling at busy neighborhood spots to get out the message about flood risks and family preparation. We will roll out our next flood awareness campaign beginning in November.

Annual report/calendar
To streamline the District's publications and to make the best use of District resources while reaching the public more effectively, Communications combined the annual report with the countywide mailer and calendar last year. The countywide mailer is sent to every household in Santa Clara County — almost 700,000 homes. The annual report had not been produced for some time, and the calendar has proven popular every year.

The resulting publication highlighted the District's accomplishments and looked ahead to upcoming projects. However, instead of mailing the calendar out to every home in the county, staff mailed a postcard

inviting people to view the annual report online — an effort to reach people where they are more likely to go — and to sign up to receive the calendar in the mail. The calendar contained the annual report information, and we mailed it to 4,467 interested community members.

While this streamlining served us well last year, this year, we plan to take advantage of increased opportunities provided by the mailer's extensive reach to disseminate educational materials on flooding. With flooding fresh in people's minds, we believe they will be more receptive to messages about preparing for potential floods and how to protect themselves, their loved ones and their homes and businesses. An expanded mailer should allow us to maintain or even increase the number of points we acquire through the Community Rating System from the federal government, which benefits those who must purchase flood insurance.

This will also tie into our efforts to strengthen our connection to the community and to ensure that the community sees the District as a valuable resource and neighbor. This is connected to our branding effort's perception poll, scheduled for June. Understanding how the community sees us will help us assist the Board in further developing strong relationships with the community.

Smartphone app
Reading what's on our intranet, aqua.gov, can be difficult for those who work out in the field or who are away from their desks, as the site can only be accessed from within the firewall.

To allow employees more access to critical employee information, we are developing a smartphone app so employees can stay abreast of what is happening in the organization. The app will also allow Communications to send push notifications for emergency notices from upper management. The app was rolled out District-wide in May.

Community outreach and engagement activities allow Board members and the District to be visible in the community and make direct contact with members of the public. Since the joining of the Communications and Community Outreach unit with the Office of Government Relations, opportunities for the Board members to engage with their constituencies are better coordinated and aligned with the priorities of the Board of Directors in serving their districts.

The use of technology and other outreach tools increase the options for the public in how they receive information and engage with the District.

Nextdoor
In September, the District became one of the government agencies allowed to post to Nextdoor, a neighborhood-based social media platform. Working collaboratively with Government Relations, we are sending all-county messages as appropriate, high-priority flood messages and project-specific messages targeted to specific neighborhoods. The Nextdoor messages have been an opportunity for Board members to directly communicate with the areas they represent.

The ability to target our audience in Nextdoor means that people are receiving timely messages appropriate for their neighborhood. It is an effective outreach tool in our community engagement toolbox and supplements the important work that our engagement specialists do.

This is in addition to the use of Facebook and Twitter to get our messages out, as well as the Valleywaternews.org blog and the eNewsletter, which now reaches more than 26,000 subscribers. Through the media update, sent to Board members when there has been media interest in the District, we encourage Directors to post the stories and tweets from our accounts to their own social media networks, thus broadening the number of people who receive District messages.

Live-streaming meetings
We have begun live-streaming key Board and community events on Facebook Live to increase our accessibility and provide greater opportunities for residents to engage with and learn about District projects and issues.

We launched the service at the beginning of this year with the appointment of Chair Varela, and we recently live-streamed the Anderson Dam Seismic Retrofit Community Update and two of the Flood Response public meetings. The live-streamed meetings netted over 1,300 viewers with several questions submitted. This

effort is still in the pilot stage while we further refine its use and effectiveness in supporting District projects and initiatives.

Project map
This summer we expect to launch a project map tool using GIS that allows the public to search for District projects in their respective neighborhoods. The map will include interactive, mobile-friendly features including direct links to project information, project webpages and a form to sign up to receive project information via e-mail. We expect this tool to make us more accessible to the public and to increase public awareness of the benefits of District investments in water quality, flood protection, and stream stewardship.

Events and meeting calendar
The District hosts public meetings on projects, as well as water conservation workshops, and sponsors and attends various community festivals and events throughout the year. Event and meeting publicity is done through mailed notices, social media posts, newspaper and online advertisements, stakeholder collaboration, e-mail lists and partnerships, and Nextdoor. A public events and meeting calendar will consolidate all information on these events and meetings, providing the public with a single District source for obtaining pertinent information on them. We expect to have the calendar on the District's website by the end of summer.

Project outreach and engagement
We provide strategic outreach, communications, and community relations support for 24 large capital projects and five small capital projects. These projects are in various stages from planning to construction and require public input or awareness on the impacts to the neighborhood.

As the District moves forward with critical seismic and reliability, flood protection and stream stewardship projects, Santa Clara County residents will benefit from the new tools listed above. In identifying public meeting dates, Directors are consulted as these projects are in the communities they represent and their engagement is integral to all District project outreach and engagement efforts.

Public engagement
Open house events allow the District to educate the public on the various projects, programs, and services we provide. More than 230 residents visited the Penitencia Water Treatment Plant at an open house held in August. Ninety-nine percent of attendees rated the event as informative and 100 percent stated that it "boosted their understanding of how drinking water is treated." The next open house will be at the Santa Teresa Water Treatment Plant in the fall.

<u>Recycled and Purified Water Outreach</u>

To secure support for a locally sustainable and drought-resistant water supply, we must continually promote public awareness of the District's potable reuse efforts. To achieve that, we are building a widespread support base of key stakeholders and local community leaders who will provide active support for purified water and the Expedited Purified Water Program. The Directors will play a significant role in this strategy through specific engagement opportunities, particularly in the communities they represent.

Surveys
In January, the District used a research firm to measure the public's acceptance for recycled water and its potential use as a future source for drinking water. The firm conducted a phone survey of 800 randomly chosen Santa Clara County voters in English, Chinese, Spanish and Vietnamese. Although the survey revealed useful information specifically related to the Asian community, concern over the framing of questions and definition of terms were raised, leading to calls for a new survey that better defines the terms of direct and indirect potable reuse. The survey was targeted for spring and results will help further define the District's outreach strategy with key messaging and identify specific focus areas.

We are also compiling data from monthly surveys collected from Silicon Valley Advanced Water Purification Center visitors. In February, feedback from 56 individuals revealed at least 85 percent support for the potable reuse of recycled purified water.

Tour program
The Silicon Valley Advanced Water Purification Center continues to draw a wide variety of stakeholders for tours, including those from educational institutions, neighboring cities and public agencies.

Ethnic outreach
The communities served by the District are ethnically and culturally diverse. The outreach for purified water programs is reflective of this diversity by including ethnic-focused events. In 2016, we held a Latino Community Day to reach a multicultural audience, specifically families from the nonprofit Somos Mayfair organization.

To address skepticism from the Asian community for recycled water usage, as revealed in the January 2017 telephone survey, a community engagement plan developed specifically for the Asian community emphasizes partnerships with community- and faith-based organizations, and promotes speaking and traditional and social media engagements for the District's Board and staff. Program staff are updating collateral materials to reflect these communities in a manner that promotes the message that the water is pure and new. On July 15, we will hold an Asian Community Day at the Purification Center.

Social media
Program staff consistently rely on social media channels, such as the District's Facebook page, to connect on a weekly basis with users to promote the Recycled Water Program and ongoing tours at the Purification Center. We will continue to broaden our use of social media by increasing paid advertisements to reach users beyond the existing network. Facebook has effectively assisted in boosting the level of interest in tours at the center.

Employee engagement
In addition to our external audiences, we are emphasizing outreach to our employees, believing that employee buy-in for recycled and purified water is crucial to winning public support.

Community engagement
Outreach for the Recycled Water Program will continue to evolve as the year progresses. Community outreach was key to the success of other communities introducing purified recycled water into their water supply portfolio. Board members have a key role in leading this charge through one-on-one conversations and presentations in the communities they represent. Additional tactics include:

- Increasing the number of speaker bureau opportunities for Directors to promote the program in their districts;
- Developing an employee ambassador program that empowers employees with a deep knowledge about recycled purified water so they may serve as key messengers in the community;
- Fostering stronger partnerships with regional public information officers to help promote purification center tours and speaker bureau engagements; and
- Launching a campaign of posters to be placed throughout District facilities that promote the recycled water message, as part of the internal outreach effort.

Agenda Item 4.3: Ms. Jessica Collins (Program Administrator) reviewed the Board Feedback on the Safe, Clean Water and Natural Flood Protection Program (Safe, Clean Water Program) with the following information:

Safe, Clean Water Program Overview
On November 6, 2012, voters approved the Safe, Clean Water Program as a countywide special parcel tax for 15 years with a sunset date of June 30, 2028. This program replaced the Clean, Safe Creeks and Natural Flood Protection Plan, which voters approved in November 2000. The Safe, Clean Water Program addresses the following needs, values, and priorities as identified by Santa Clara County stakeholders:

Priority A: Ensure a safe, reliable water supply
Priority B: Reduce toxins, hazards and contaminants in our waterways
Priority C: Protect our water supply from earthquakes and natural disasters
Priority D: Restore wildlife habitat and provide open space
Priority E: Provide flood protection to homes, businesses, schools, and highways

Each of these priorities has specific operational and capital projects, which have Key Performance Indicators (KPIs) meant to keep them on track to meet the overall program priorities. Additionally, the

Program requires the Santa Clara Valley Water District (District) to prepare an annual report providing a progress update and fiscal year accomplishments for each project. Also, to ensure transparency and accountability, the Program requires that the annual report be reviewed by an Independent Monitoring Committee (IMC) of volunteers appointed by the District Board of Directors (Board).

The report provides the status of each project's progress towards accomplishing its KPIs and targets established in the 5-Year Implementation Plan. Each project's status is described by one of the following five categories:

On Target: Status indicates the project is on track to meet targets

Adjusted: Status indicates the potential that targets will not be met and implementation required adjustment (future year status' will be based upon the adjusted project targets)

Not on Target: Status indicates that the target has not been or will not be met

Modified: Status indicates the Board formally modified the project following a public hearing (future year status' will be based upon the modified project targets)

Scheduled to Start: Status indicates that the project is scheduled to start in a future fiscal year

In the Fiscal Year 2015-2016 Safe, Clean Water Annual Report, of the 38 projects under the Safe, Clean Water Program, 74%, or 28 projects, are on target; 21% (8 projects) required schedule adjustments; 2.5% or 1 project is not scheduled to start until Fiscal Year 2025; and 2.5% or 1 project was completed and closed out.

Each September, the Board receives the draft annual report, with unaudited financials for their review. The draft annual report also contains any proposed text adjustments. Per authorization from the Board, staff finalizes the draft report with the audited financials in October and submits the final version to the Board and the IMC in November each year. The IMC then reviews the annual report and submits its own report regarding the District's performance and progress toward accomplishing the Safe, Clean Water Program KPIs.

The Board's feedback, to date, regarding the Safe, Clean Water Program has been positive. The Board has been appreciative of staff's work toward accomplishing the KPI's and has praised the positive working relationship between staff and the IMC. The Board has been especially appreciative of the IMC's role and the members' dedication and time spent reviewing the annual reports in great depth. Board's feedback regarding the Safe, Clean Water Program can be found in the meeting minutes posted here: http://valleywater.org/About/BoardMeetings.aspx.

Year four of the Safe, Clean Water Program just ended and the District is in the process of developing the Fiscal Year 2016-2017 Annual Report. The annual reports for year's one through three can be found on the District's website at: http://www.valleywater.org/SCWAnnualReports/. The IMC's reports in review of the annual reports can be found here: http://valleywater.org/SCWIMC.aspx.

To date, the District has held two public hearings for modifications to the Safe, Clean Water Program. The first was held on June 10, 2014 for modification to the San Francisquito Creek Flood Protection Project. The second was held on June 13, 2017 for modification to the Coyote Creek Flood Protection Project.

Agenda Item 4.4: Ms. Glenna Brambill (Management Analyst II) reviewed the Agricultural Water Advisory Committee work plan and the Committee's next meeting agenda. The updated Board Advisory Committee Handbook was made available for anyone wanting a copy.

If you have any questions or concerns, you may contact me, gbrambill@valleywater.org or 1.408.630.2408.

Thank you.

Glenna Brambill, Management Analyst II,
Board Committees Liaison
Office of the Clerk of the Board

File No.: 17-0437

Agenda Date: 8/8/2017
Item No.: *5.1.

BOARD AGENDA MEMORANDUM

SUBJECT:
Report of Bids Received and Award of Construction Contract to Kiewit Infrastructure West Co. for the Pacheco Conduit Inspection and Rehabilitation Project, Project Nos. 91214001 and 95084002, Contract No. C0629 (Unincorporated County), (District 1).

RECOMMENDATION:
A. Ratify Addendum Nos.1, 2, and 3 to the Contract documents for the Pacheco Conduit Inspection and Rehabilitation Project;

B. Waive minor irregularity in Kiewit Infrastructure West Co. Bid;

C. Award the Contract to Kiewit Infrastructure West Co., in the sum of $3,045,000; and

D. Approve a contingency sum of $456,000 and authorize the Chief Executive Officer or designee to approve individual change orders up to the designated amount.

SUMMARY:
The Pacheco Conduit Inspection and Rehabilitation Project is the final project to be completed under the District's 5-Year Pipeline Inspection and Rehabilitation Program. Staff is initiating a new 10-Year Pipeline Inspection and Rehabilitation Program in the current fiscal year . The purpose of both of these programs is to maintain the integrity of the approximately 140 miles of large diameter raw and treated water transmission pipelines, extend their useful life, and address infrastructure reliability concerns. Approving the recommended actions will allow for the Project to proceed into construction and will increase the reliability of a portion of the existing transmission pipeline network.

Project Background

The Project involves inspection, maintenance, and rehabilitative work on the Pacheco Conduit (Project No. 91214001) and a 0.5-mile portion of the Santa Clara Conduit (Project No. 95084002) as part of the Pipeline Maintenance Program (PMP).

The Pacheco Conduit consists of approximately 7.9 miles of 120-inch diameter Prestressed Concrete

Cylinder Pipeline (PCCP) constructed in the 1980's. The Pacheco Conduit is an integral part of the U.S. Bureau of Reclamation (Reclamation) Central Valley Project San Felipe Division, which conveys raw water from the San Luis Reservoir to Santa Clara and San Benito counties. The District is responsible for inspecting the Pacheco conduit every five (5) years in accordance with the maintenance and operation agreement with Reclamation.

In FY06, staff completed an inspection and rehabilitation project on a portion of the Pacheco Conduit. Approximately 2/3 of the Pacheco Conduit was inspected, with 12 (0.85%) pipe sections found to have wire break damage. Reclamation requested a full re-inspection of the Pacheco Conduit in 2012; however, the threat posed by the presence of zebra mussels in the Hollister Conduit delayed this inspection at that time.

The primary objective of this Project is to gather condition assessment information on pre-stressed concrete cylinder pipe (PCCP), perform necessary repairs to appurtenances, strengthen PCCP segments found to be in poor condition, and install acoustic fiber optic cable monitoring technology to mitigate catastrophic failure of PCCP.

The Project also includes work on a 0.5-mile portion of the Santa Clara Conduit and rehabilitation activities at the bifurcation structure. The 96-inch diameter Santa Clara Conduit was constructed by Reclamation in the 1980s. A pipe segment on this portion of the conduit failed catastrophically on August 1, 2015.

The proposed work on the Pacheco Conduit and Santa Clara Conduit involves:

i. Shutdown of the San Felipe System from October 2017 to January 2018, with complete dewatering of the Pacheco Conduit and portions of the Santa Clara Conduit to facilitate internal inspection and rehabilitation efforts;

ii. Internal visual, sounding, and electromagnetic inspections of the PCCP for condition assessment;

iii. Internal maintenance, repair, and installation of carbon fiber reinforced polymer (CFRP) structural lining, of the PCCP for the remediation of deficiencies identified during inspections;

iv. Installation of acoustic fiber optic cables for real-time wire break monitoring;

v. Sectionalizing valve replacement for improved system isolation and operation capabilities;

vi. Bypass piping and valve replacement for the remediation of previously identified assembly deficiencies;

vii. Bypass assembly support installation for the remediation of previously identified structural support deficiencies;

viii. Pipeline appurtenance assemblies and piping maintenance and rehabilitation for the remediation of previously identified deficiencies and improved operational performance;

ix. Installation of an additional sectionalizing valve for improved system isolation in an effort to mitigate the intrusion of zebra mussel-laden water for the Hollister Conduit during shutdown conditions;

x. Installation of additional bypass pumping piping to facilitate future pipeline dewatering; and

xi. Installation of additional maintenance platforms and ladders to facilitate the safe maintenance and operation of the existing facilities.

Completion of the proposed Project will help improve the long-term reliable delivery of raw water to Santa Clara and San Benito Counties and allow the District to meet the requirements of its maintenance and operation agreement with Reclamation.

Construction of the proposed Project is scheduled to begin in October 2017 and end in February 2018, with the shutdown of the pipeline limited to the first twelve (12) weeks of the Project schedule to minimize the impacts to the Santa Clara and San Benito Counties' water supply. Coordination and planning efforts with local, State, and Federal water supply and regulatory agencies have been completed. Contingency planning for potential conflicts with concurrent District operations has been done, and the ability to move the proposed Project construction dates is addressed in the Project specifications.

Staff is also working on an agreement to enable a Reclamation maintenance team to conduct grouting and repairs on the Santa Clara Tunnel during the shutdown window to reduce leakage from the tunnel.

Addendum Ratification

Staff issued three (3) addenda during the bid period (Attachment 1) in response to potential bidders' requests for Bid Document clarifications and/or interpretations. To formally incorporate these addenda into the Contract documents, staff recommends that the Board ratify Addenda Nos. 1, 2, and 3.

Waiver of Minor Irregularity in Kiewit Infrastructure West Co.'s Bid

Per the Notice to Bidders, paragraph 14, the District reserved the right to reject any and all bid proposals and to waive minor defects and irregularities in any submitted Bid form(s). Kiewit Infrastructure West Co.'s bid contained a minor error.

Bid Form No. 4, the Small Business Outreach Program: Instructions and Compliance Document, was replaced in Addendum No. 2 with Small Outreach Program: Instructions and Compliance Document (REV 1). The bid package submitted by Kiewit Infrastructure West Co. contained the original version of Bid Form No. 4. The revisions to Bid Form No. 4 modified the due dates for submitting Small/Micro Business Enterprise (SBE) documentation and other post-bid documents. Nonetheless, Kiewit Infrastructure West Co. submitted all required documentation within the revised timeline required in Bid Form 4 (REV 1). As a result, Kiewit Infrastructure West Co. has complied with all requirements of

the District's Small Business Outreach Program within the prescribed time. Therefore, this error can be considered minor and waivable by the Board.

The District's waiver of the minor irregularity discussed above does not result in the bid process being unfair or give the firm an unfair advantage over the other bidders. The error does not render Kiewit Infrastructure West Co.'s bid nonresponsive. The public's best interest is served by waiving the irregularity and awarding the contract to Kiewit Infrastructure West Co. as the firm submitting the lowest bid.

Contract Award

The results of the three (3) bid proposals received and opened on July 31, 2017, are summarized in Table 1. The Engineer's Estimate is $2,729,128. The average of the responsive bid proposals is $4,667,000 which is 71% above the Engineer's Estimate. The lowest responsive bid is 12% above the Engineer's Estimate. The Engineer's Estimate was developed using the average pricing of bids received within the past few years for pipeline projects of similar scope.

Table 1 - Bid Opening Results

Company / Location	Bid Amount	Award Amount
Kiewit Infrastructure West Co.	$3,045,000	$3,045,000
Sierra Mountain Construction Inc.	$4,871,000	
Syblon Reid General Contractors	$6,085,000	
Engineer's Estimate: $2,729,128		

Staff has reviewed the bid proposals and recommends that the contract for the Project be awarded to Kiewit Infrastructure West Co. for the following reasons:

1. All bid entries and requirements in the proposal submitted by Kiewit Infrastructure West Co. are in order;

2. Kiewit Infrastructure West Co. 's license is current, active, and in good standing;

3. Kiewit Infrastructure West Co. complied with the District's SBE Outreach program and demonstrated Good Faith Effort to generate SBE participation in their Bid; and

4. Kiewit Infrastructure West Co. is in compliance with the requirements of the California Labor Code §1771.1 because they and their subcontractors are registered with the California Department of Industrial Relations and qualified to perform public works pursuant to Section 1725.5 of the Labor Code.

Construction Contingency Funds

Staff recommends the Board approve a contingency amount of $456,000 (approximately 15% of the

Contract award sum). This will allow staff to quickly address unforeseen or changed site conditions and other unanticipated occurrences, without causing unnecessary delays or consequential costs to the Project. The contingency amount was estimated due to known and unknown risks, such as:

1. Site conditions that may differ from the as-built information use in the development of the construction Contract documents.

2. Unforeseen site conditions that may impact site access and Pacheco Creek crossings.

3. Additional days of excusable inclement weather beyond what has been anticipated in the schedule.

4. Unanticipated protection of special species of concern, which may be necessary to complete the Project.

Approval of individual change orders will be made up to the designated amounts as follows:

1. Engineering Unit Manager: $30,000

2. Deputy Operating Officer (Designated Engineer): $50,000

3. CEO: up to the total amount of the contingency

Outreach to Bidders

The Notice to Bidders was sent to 428 certified Small Business Contractors that have the appropriate license. Twenty (20) SBE and Chambers of Commerce, and twenty-seven (27) plan rooms (Builder Exchanges) and District's own web site were used to solicit interest in the Project work from prospective Contractors. Five hundred-seventy (570) contractors were contacted through the Building Construction & Trades Council, and 248 contractors were contacted using the District's own Master Contractor Database.

Public Outreach

The District's Communications Unit will implement an outreach plan for the Pacheco Conduit Inspection and Rehabilitation Project prior to the start of construction. This plan will include the mailing of Project flyers and public information signage with contact information for all public inquiries.

Previous Board Actions Related to this Project

On March 9, 2010, the Board adopted Resolution 10-24 to Consider Undertaking a Work of Improvement and set the Public Hearing on the Engineer's Report that covers all the pipeline rehabilitation projects in the PMP. On April 13, 2010, the Board held a Public Hearing and adopted Resolution 10-29 approving the Engineer's Report.

On September 27, 2016, the Board of Directors adopted the plans and specifications and authorized advertisement for bids for the construction of the Pacheco Conduit and Santa Clara Tunnel Rehabilitation Project, with the intent to start construction in January 2017. Staff later determined that the environmental permits and clearances required for Project construction could not be obtained by the scheduled bid award date.

During the 2016 bid process, staff issued five (5) addenda to respond to contractor inquiries, extend the bidding period, and ultimately, to cancel the bidding process due to the lack of environmental permits for the Project. On December 13, 2016, the Board of Directors ratified addenda Nos. 1 through 5 to the Contract Documents.

On June 13, 2017, the Board of Directors adopted the Project's plans and specifications and authorized advertisement for bids. These plans and specifications were updated to reflect the addenda prepared in the 2016 bid process

Next Steps

If the Board approves the recommendations, staff will proceed with administering construction of the Project. Attachment 2 (Project Delivery Process Schematic) highlights the current Project phase and the staff recommendations before the Board.

FINANCIAL IMPACT:
The estimated total Project cost for planning, design, and construction is $9.4 million. Pursuant to a written cost sharing agreement with San Benito County Water District (SBCWD), SBCWD is responsible for 22% of the total Project cost for the work within San Felipe Reach 1. Approximately 5% of the Project work is outside of San Felipe Reach 1 and will be paid for through the 10-Year Pipeline Rehabilitation Project (Project No. 95084002).

The FY 18-22 CIP reflects a total Project cost of $7 million for Pacheco Conduit Inspection and Rehabilitation Project (Project # 91214001). However, during the planning and design phase, the scope of work was expanded to include additional improvements to the pipeline, resulting in the higher total project cost estimate of $9.4 million. There are adequate funds in the Project's Board-approved FY18 Budget to cover the construction cost of $3,045,000 and contingency sum of $456,000. A budget adjustment for District labor costs will be recommended to the Board at a later date.

Table 2 provides a breakdown of the estimated costs of all Project activities. Approximately, $3,000,000 were expended in FY 2017.

Table 2 - Estimated Project Costs for Pacheco Conduit Inspection and Rehabilitation Project

Estimated Project Costs	
Project Development, Planning and Desi	$500,000
Long Lead Time Parts and Material Proc	$1,300,000
Construction Contract	$3,045,000
Construction Contingency	$456,000
Supplemental Contract Work	$1,000,000
Construction Management, Inspection, a	$1,000,000
Electromagnetic Pipeline Inspection	$300,000
Acoustic Fiber Optic (AFO) Monitoring S	$1,590,000
Project Close-out	$100,000
TOTAL	**$9,301,000**

CEQA:
On November 13, 2007, the Board certified the Pipeline Maintenance Program Environmental Impact Report Program (PMP PEIR) [Resolution No. 07-71]. Since the Pacheco Conduit is a federal facility under the authority of the Bureau of Reclamation; the work requires evaluation per the National Environmental Policy Act (NEPA). The Bureau of Reclamation completed an Environmental Assessment (EA) of the activities [*EA-15-059 - SCVWD'S 2016 Pacheco Conduit Maintenance Project, May 12, 2017*] and issued a Finding of No Significant Impact (FONSI-15-059) on May 12, 2017.

ATTACHMENTS:
Attachment 1: Addendum No. 1 through No. 3
Attachment 2: Project Delivery Process Chart
Attachment 3: Map

UNCLASSIFIED MANAGER:
Christopher Hakes, 408-630-3796

CAPITAL PROGRAM SERVICES
5750 ALMADEN EXPRESSWAY
SAN JOSE, CA 95118-3686
TELEPHONE (408) 630-3088
FACSIMILE (408) 979-5631
www.valleywater.org
scvwdplanroom@valleywater.org

Notification of this Addendum is transmitted via email to all current plan holders. This Addendum is posted on the District website at www.valleywater.org/Programs/Construction.aspx.

July 19, 2017

ADDENDUM NO. 1
TO CONTRACT DOCUMENTS FOR THE
PACHECO CONDUIT INSPECTION AND REHABILITATION PROJECT
Project No. 91214001 & 95084002

Contract No. C0629

Notice is hereby given to Prospective Bidders that the Contract Documents are modified as hereinafter set forth.

BID DOCUMENTS

NOTICE TO BIDDERS

Section 3.A. Project Description

REPLACE items 2. and 3. with:

"2. Installing new electrical, control panel, and SCADA controls and modifying existing RTU at the Bifurcation Structure (BIF).
3. Preparing and coating all in-vault and exposed pipeline appurtenances and associated assembly components.
4. Restoring all impacted work sites to a condition equal to or better than that existing prior to construction."

Section 4. Contract Time

REPLACE Paragraph C. with:

"C. Milestone #3 - All work required to support the installation of the internal pipeline acoustic fiber optic monitoring system by the District's third-party consultant. The Contractor shall coordinate with the third-party consultant and complete Milestone #3 work before the expiration of **28** calendar days from the first day that the internal visual and electromagnetic inspection is complete.

REPLACE Paragraph D. with:

"D. Milestone #4 - All shutdown-related work required to restore the Hollister Conduit transmission system to service. The Contractor shall complete Milestone #4 work before the expiration of **42** calendar days from the first day that the transmission system is taken out of service."

BID FORM NO. 1 – PROPOSAL AND BID ITEMS

REPLACE BID FORM NO. 1 Proposal Form and Bid Items with:

BID FORM NO.1 Proposal Form and Bid Items (REV. 1) (ATTACHMENT A)

Changes have been made to Bid Item 45, see in bold

SPECIFICATIONS AND CONTRACT DOCUMENTS

SIGNATURE PAGE(S)

ADD additional signature page **(ATTACHMENT B)**

TABLE OF CONTENTS

TECHNICAL PROVISIONS

ADD new section titles to the Table of Contents:

"SECTION 36.01	GENERAL ELECTRICAL REQUIREMENTS
SECTION 36.04	ELECTRICAL DEMOLITION AND MODIFICATIONS
SECTION 36.10	GENERAL ELECTRICAL DESIGN AND INSTALLATION REQUIREMENTS
SECTION 36.11	COMMON ELECTRICAL EQUIPMENT
SECTION 36.16	GROUNDING SYSTEM
SECTION 36.19	CONDUITS, BOXES, AND FITTINGS
SECTION 36.25	WIRES AND CABLES, 600 VOLTS AND BELOW
SECTION 36.34	WIRING DEVICES
SECTION 36.49	PANELBOARDS
SECTION 37.01	GENERAL INSTRUMENTATION AND CONTROLS REQUIREMENTS
SECTION 37.02	CONTROL PANELS, ENCLOSURES, AND CABINETS
SECTION 37.03	PANEL REQUIREMENTS"

SPECIAL PROVISIONS

Article 12.01. Summary of Work

REPLACE Paragraph E. with:

"E. The Contractor shall:

1. Completely drain and remove all water from the Pacheco Conduit, Santa Clara Conduit and Santa Clara Tunnel.

2. Perform work on the raw water transmission pipeline and tunnel appurtenances at fifty-one (51) sites. See the Pipeline Maintenance Tables on sheets G-5 through G-7 of the Project drawings for the appurtenance work to be completed at each site.

3. Provide logistical support for and participate in the manned internal visual and electromagnetic inspection of the Pacheco Conduit and Santa Clara Conduit by the District and its third-party consultant.

4. Provide logistical support for the installation of a fiber optic acoustic monitoring system for the Pacheco Conduit and a portion of the Santa Clara Conduit by the District's third-party consultant.

5. Installing new electrical, control panel, and SCADA controls and modifying existing RTU at the Bifurcation Structure (BIF).

6. Perform internal pipeline repair work as specified and as needed should deteriorated pipe sections be identified during the internal pipeline visual and electromagnetic inspection, including carbon fiber reinforcement of Pre-stressed Concrete Cylinder Pipe.

7. Prepare and coat all in-vault and exposed pipeline and tunnel appurtenances and associated piping assembly components.

8. Restore all impacted work sites to a condition equal to or better than that existing prior to construction."

REPLACE Paragraph F.5.a. with:

"a. All shutdown related work required to rehabilitate and restore the Pacheco Conduit, the Santa Clara Conduit and the Santa Clara Tunnel to service.

(1) Pacheco Conduit, Santa Clara Conduit and Santa Clara Tunnel appurtenance work – The Contractor shall complete the work as depicted in the Drawings and as specified in the Pipeline Maintenance Tables on sheets G-5 through G-7 of the Drawings, except as noted.

(2) Pacheco Conduit and Santa Clara Conduit manned internal visual and electromagnetic inspection work – The Contractor shall support and participate in all internal pipeline inspection activities. See Article 31.07 – 'Support for Internal Pipeline Work'.

(3) Bifurcation Structure (BIF) Electrical and Control Systems Upgrade

(4) This is part of the Supplemental Work; Pacheco Conduit and Santa Clara Conduit internal repair work – Based on results of the visual and electromagnetic inspections, the Contractor may be required to:

(a) Install internal Carbon Fiber Reinforcement in multiple deteriorated sections of the existing Prestressed Concrete Cylinder Pipe. See Article 42.02 – 'Carbon Fiber Reinforcement'.

(b) Install internal weko-seals at multiple locations. See Article 31.05 – 'Weko-Seal Installation'.

(c) Perform internal pipeline repairs and debris removal at multiple locations. See Article 31.08 – 'Internal Pipeline Work & Debris"

Article 12.03. Contract Times(s)

REPLACE Paragraph C.3. with:

"3. The Contractor shall complete **Milestone 3** before the expiration of **28** Calendar Days from the first day that the District completes its internal visual and electromagnetic inspection of the Pacheco Conduit and Santa Clara Conduit. See Article 12.01 – 'Summary of Work' for the Milestone 3 scope of work."

REPLACE Paragraph C.4. with:

"4. The Contractor shall complete **Milestone 4** before the expiration of **42** Calendar Days from the first day that the raw water transmission system is taken out of service. See Article 12.01 – 'Summary of Work' for the Milestone 4 scope of work."

REPLACE TABLE 12.03-1 with:

TABLE 12.03-1
Tentative Schedule of Work

Description	Duration (Calendar Days)	Start Date	End Date
Milestone 1 Scope of Work – Site Preparation & Equipment Staging	31	Wednesday, September 06, 2017	Friday, October 06, 2017
Pipeline Isolation, LOTO & Initial District Draining	3	Friday, October 06, 2017	Sunday, October 08, 2017
Milestone 2 Scope of Work – Pipeline Dewatering & Inspection Preparation	21	Monday, October 09, 2017	Sunday, October 29, 2017
Internal Pipeline Visual & EM Inspection Support	7	Monday, October 30, 2017	Sunday, November 05, 2017
Acoustic Fiber Optic (AFO) Installation Support	70	Monday, November 06, 2017	Sunday, January 14, 2018
Milestone 3 Scope of Work – AFO Monitoring Installation	28	Monday, November 06,2017	Sunday, December 3, 2017
Milestone 4 Scope of Work – Shutdown Required Work	42	Monday, October 09, 2017	Sunday, November 19, 2017
Milestone 5 Scope of Work – Shutdown Required Work	98	Monday, October 9, 2017	Sunday, January 14, 2018
Pre-Fill Appurtenance Inspection	3	Monday, January 15, 2018	Wednesday, January 17, 2018
Pipeline De-isolation, LOTO, Fill & Pressurization	2	Thursday, January 18, 2018	Friday, January 19, 2018
Pressurization Appurtenance Inspection	3	Saturday, January 20, 2018	Monday, January 22, 2018
Milestone 6 Scope of Work – Non-Shutdown Required Work	20	Saturday, January 20,2018	Thursday, February 08, 2018

Description	Duration (Calendar Days)	Start Date	End Date
Milestone 7 Scope of Work – Project Completion	20	Friday, February 09, 2018	Wednesday, February 28, 2018

Article 21.01.02. Description of Bid Items

REPLACE Paragraph SS. with:

"SS. Bid Item No. 45—Work as Specified for PAC BIF @ Station 132+40—Bifurcation Valve Vault

1. Scope of Work (Bid Item No. 45a): This bid item shall include doing all work, providing all equipment and furnishing all non-District furnished materials required to complete the work for the referenced site as a shown on the Drawings and as specified in these Specifications.

   Scope of Work (Bid Item No. 45b): This bid item shall include doing all work, providing all equipment and furnishing all materials required to complete the work for the referenced site as a shown on the Drawings and as specified in these Specifications.

2. Measurement and Payment (Bid Item No. 45a): Unless otherwise specified, full compensation for doing all work and furnishing all non-District furnished materials required for the work at this site as specified in these Specifications and as shown on the Drawings shall be included in the Lump Sum bid price for this bid item.

   Measurement and Payment (Bid Item No. 45b): Unless otherwise specified, full compensation for doing all work and furnishing all materials required for the work at this site as specified in these Specifications and as shown on the Drawings shall be included in the Lump Sum bid price for this bid item."

TECHNICAL PROVISIONS

ADD new section and title:

"SECTION 36. ELECTRICAL"

ADD new Article 36.01 – GENERAL ELECTRICAL REQUIREMENTS **(ATTACHMENT C)**

ADD new Article 36.04 – ELECTRICAL DEMOLITION AND MODIFICATIONS **(ATTACHMENT D)**

ADD new Article 36.10 – GENERAL ELECTRICAL DESIGN AND INSTALLATION REQUIREMENTS **(ATTACHMENT E)**

ADD Article 36.11 – COMMON ELECTRICAL EQUIPMENT **(ATTACHMENT F)**

ADD Article 36.16 – GROUNDING SYSTEM **(ATTACHMENT G)**

ADD Article 36.19 – CONDUITS, BOXES, AND FITTINGS **(ATTACHMENT H)**

ADD Article 36.25 – WIRES AND CABLES, 600 VOLTS AND BELOW **(ATTACHMENT I)**

ADD Article 36.34 – WIRING DEVICES **(ATTACHMENT J)**

ADD Article 36.49 – PANELBOARDS **(ATTACHMENT K)**

Article 37. INSTRUMENTATION AND CONTROLS

ADD Article 37.01 – GENERAL INSTRUMENTATION AND CONTROLS REQUIREMENTS **(ATTACHMENT L)**

ADD Article 37.02 – CONTROL PANELS, ENCLOSURES, AND CABINETS **(ATTACHMENT M)**

ADD Article 37.03 – PANEL REQUIREMENTS **(ATTACHMENT N)**

MAP AND CONSTRUCTION PLAN

DRAWINGS

ADD the following twenty-nine (29) Drawing Sheets **(ATTACHMENT O)**

Drawing Sheets: GE-01-GE-08, E-001-E-002, E-102-E-103, E-109-E-112, E-115-E-121 ED-102, ED-109-ED-112, ED-115

[Remainder of Page Intentionally Left Blank]

THIS ADDENDUM NO.1, WHICH CONTAINS 8 PAGES AND 15 ATTACHMENTS, IS ATTACHED TO AND IS A PART OF THE SPECIFICATIONS AND CONTRACT DOCUMENTS FOR THIS PROJECT.

Karen Uyeda Date: 7/19/2017

Karen Uyeda, P.E. acting for
Katherine Oven
Deputy Operating Officer
Water Utility Capital Division

Enclosures:

1. ATTACHMENT A – BID FORM NO.1 (REV. 1)
2. ATTACHMENT B – SIGNATURE PAGE, PAGE 2
3. ATTACHMENT C – SPECIFICATIONS ARTICLE 36.01 – GENERAL ELECTRICAL REQUIREMENTS
4. ATTACHMENT D – SPECIFICATIONS ARTICLE 36.04 – ELECTRICAL DEMOLITION AND MODIFICATIONS
5. ATTACHMENT E – SPECIFICATIONS ARTICLE 36.10 – GENERAL ELECTRICAL DESIGN AND INSTALLATION REQUIREMENTS
6. ATTACHMENT F – SPECIFICATIONS ARTICLE 36.11 – COMMON ELECTRICAL EQUIPMENT
7. ATTACHMENT G – SPECIFICATIONS ARTICLE 36.16 – GROUNDING SYSTEM
8. ATTACHMENT H – SPECIFICATIONS ARTICLE 36.19 – CONDUITS, BOXES, AND FITTINGS
9. ATTACHMENT I – SPECIFICATIONS ARTICLE 36.25 – WIRES AND CABLES, 600 VOLTS AND BELOW
10. ATTACHMENT J – SPECIFICATIONS ARTICLE 36.34 – WIRING DEVICES
11. ATTACHMENT K – SPECIFICATIONS ARTICLE 36.49 – PANELBOARDS
12. ATTACHMENT L – SPECIFICATIONS ARTICLE 37.01 – GENERAL INSTRUMENTATION AND CONTROLS REQUIREMENTS
13. ATTACHMENT M – SPECIFICATIONS ARTICLE 37.02 – CONTROL PANELS, ENCLOSURES, AND CABINETS
14. ATTACHMENT N – SPECIFICATIONS ARTICLE 37.03 – PANEL REQUIREMENTS
15. ATTACHMENT O – REVISED DRAWING SHEETS E-001-E-002, E-103, E-109-E-112, E-115-E-121, ED-109-ED-112, ED-115, GE-01-GE-

PACHECO CONDUIT INSPECTION AND REHABILITATION PROJECT ADDENDUM NO.1

ATTACHMENT A

BID FORM NO.1 (REV. 1)
Proposal and Bid Items

Project No. 91214001 & 95084002
Contract No. C0629

This page intentionally left blank.

Proposal and Bid Items

*This form must be completed in **ink** and changes must be **initialed**.*

Honorable Board of Directors
Santa Clara Valley Water District (District)

Pursuant to, and in compliance with, the Notice to Bidders and the Contract Documents, relating to the **PACHECO CONDUIT INSPECTION AND REHABILITATION PROJECT**, the undersigned Bidder having become thoroughly familiar with the terms and conditions of the Contract Documents and with local conditions affecting the performance and costs of the Work and having fully inspected the Work site in all particulars, hereby proposes and agrees to fully perform the Work, including providing any and all labor and materials and performing all Work required to construct and complete said Work within the contract time stated and in accordance with the requirements of the Contract Documents, for the following sum of money.

The undersigned Bidder agrees to complete all the Work within **176** calendar days from the first chargeable day of the Contract, as stated in the Notice to Begin Work. The Bidder agrees to enter into a Contract with the District and provide the required bonds and insurance in accordance with the Instructions to Bidders, Contract Bonds, paragraph #21 and Execution of Contract, paragraph #22. If the Bidder fails to meet these requirements within the time specified in the Instruction to Bidders, Failure to Execute Contract, paragraph #23, the Bidder's security accompanying this Proposal may be forfeited and become the property of the District. No Contract exists until all Contract bonds and insurance documents have been accepted by the District.

TOTAL BID: $ _____

Bidder acknowledges receipt of the following Addenda to the Bid Documents:
Addenda are posted online at www.valleywater.org/Programs/Construction.aspx.

☐ **NO** Addenda received

☐ Addenda received as follows:

Addendum No. _____ Date _____ Addendum No. _____ Date _____
Addendum No. _____ Date _____ Addendum No. _____ Date _____

Failure to acknowledge receipt of an Addendum on the Bid Form is not, in itself, cause for withdrawal or rejection of Bid, if it can be established that Bidder did, in fact, receive such Addendum prior to Bid opening.

The undersigned Bidder has read and, understands, and will comply with, each and all of the requirements specified in these Bid Documents. This Proposal must be signed by an authorized representative of the Bidder with the authority to bind the Bidder.

BIDDER'S COMPANY INFORMATION	
NAME:	ADDRESS:
CONTRACTOR'S CALIFORNIA LICENSE NUMBER: DATE OF EXPIRATION: LICENSE CLASSIFICATION(S):	
PHONE NO.: **( )**	FAX NO.: **( )**
EMAIL ADDRESS:	

SIGNATURE BLOCK (Signature Block must be completed in *ink* and changes must be *initialed*.)	
Bidder's Signature:	Date:
Bidder's Name and Title (Print):	

Proposal and Bid Items

*This form must be completed in **ink** and changes must be **initialed**.*

ITEM NO.	DESCRIPTION OF ITEM	APPROXIMATE QUANTITY / UNIT	UNIT PRICE	TOTAL
1	Mobilization	Lump Sum / Lump Sum		
2	Work as Specified for Pipeline Dewatering	Lump Sum / Lump Sum		
3	Work as Specified for PAC PSV @ Station 481+95—Sectionalizing Valve Vault	Lump Sum / Lump Sum		
4	Work as Specified for PAC 2 @ Station 483+10—10” Blowoff	Lump Sum / Lump Sum		
5	Work as Specified for PAC 3 @ Station 484+97—8” ARV	Lump Sum / Lump Sum		
6	Work as Specified for PAC 4 @ Station 485+85—10” Blowoff	Lump Sum / Lump Sum		
7	Work as Specified for PAC 5 @ Station 487+33—8” ARV	Lump Sum / Lump Sum		
8	Work as Specified for PAC 6 @ Station 489+72—20” Blowoff	Lump Sum / Lump Sum		
9	Work as Specified for PAC 7 @ Station 490+60—8” ARV	Lump Sum / Lump Sum		

ITEM NO.	DESCRIPTION OF ITEM	APPROXIMATE QUANTITY / UNIT	UNIT PRICE	TOTAL
10	Work as Specified for PAC 8 @ Station 492+19—10” Blowoff	Lump Sum / Lump Sum		
11	Work as Specified for PAC 9 @ Station 495+19—10” ARV	Lump Sum / Lump Sum		
12	Work as Specified for PAC 10 @ Station 498+39—10” Blowoff	Lump Sum / Lump Sum		
13	Work as Specified for PAC 11 @ Station 500+78—8” ARV	Lump Sum / Lump Sum		
14	Work as Specified for PAC 12 @ Station 504+28—20” Blowoff	Lump Sum / Lump Sum		
15	Work as Specified for PAC 13 @ Station 504+81—8” ARV	Lump Sum / Lump Sum		
16	Work as Specified for PAC 14 @ Station 506+22—10” Blowoff	Lump Sum / Lump Sum		
17	Work as Specified for PAC 15 @ Station 512+14—8” ARV	Lump Sum / Lump Sum		
18	Work as Specified for PAC 16 @ Station 513+02—10” Blowoff	Lump Sum / Lump Sum		

ITEM NO.	DESCRIPTION OF ITEM	APPROXIMATE QUANTITY / UNIT	UNIT PRICE	TOTAL
19	Work as Specified for PAC 17 @ Station 514+80—10” ARV	Lump Sum / Lump Sum		
20	Work as Specified for PAC 18 @ Station 519+81—10” Blowoff	Lump Sum / Lump Sum		
21	Work as Specified for PAC 19 @ Station 521+18—8” ARV	Lump Sum / Lump Sum		
22	Work as Specified for PAC 20 @ Station 521+33—20” Blowoff	Lump Sum / Lump Sum		
23	Work as Specified for PAC 21 @ Station 523+04—10” ARV	Lump Sum / Lump Sum		
24	Work as Specified for PAC 22 @ Station 524+02—10” Blowoff	Lump Sum / Lump Sum		
25	Work as Specified for PAC 23 @ Station 524+51—8” ARV	Lump Sum / Lump Sum		
26	Work as Specified for PAC 24 @ Station 527+09—10” Blowoff	Lump Sum / Lump Sum		
27	Work as Specified for PAC 25 @ Station 531+07—8” ARV	Lump Sum / Lump Sum		

ITEM NO.	DESCRIPTION OF ITEM	APPROXIMATE QUANTITY / UNIT	UNIT PRICE	TOTAL
28	Work as Specified for PAC 26 @ Station 534+11—10” Blowoff	Lump Sum / Lump Sum		
29	Work as Specified for PAC 27 @ Station 535+39—8” ARV	Lump Sum / Lump Sum		
30	Work as Specified for PAC 28 @ Station 538+73—20” Blowoff	Lump Sum / Lump Sum		
31	Work as Specified for PAC 29 @ Station 543+28—8” ARV	Lump Sum / Lump Sum		
32	Work as Specified for PAC 30 @ Station 76+79—10” Pumpout	Lump Sum / Lump Sum		
33	Work as Specified for PAC 31 @ Station 79+31—8” ARV	Lump Sum / Lump Sum		
34	Work as Specified for PAC 32 @ Station 88+60—20” Blowoff	Lump Sum / Lump Sum		
35	Work as Specified for PAC 33 @ Station 91+70—8” ARV	Lump Sum / Lump Sum		
36	Work as Specified for PAC 34 @ Station 102+89—20” Blowoff	Lump Sum / Lump Sum		

ITEM NO.	DESCRIPTION OF ITEM	APPROXIMATE QUANTITY / UNIT	UNIT PRICE	TOTAL
37	Work as Specified for PAC 35 @ Station 103+93—8” ARV	Lump Sum / Lump Sum		
38	Work as Specified for PAC 36 @ Station 108+37—10” Pumpout	Lump Sum / Lump Sum		
39	Work as Specified for PAC 37 @ Station 112+54—8” ARV	Lump Sum / Lump Sum		
40	Work as Specified for PAC 38 @ Station 119+77—10” Pumpout	Lump Sum / Lump Sum		
41	Work as Specified for PAC 39 @ Station 123+28—8” ARV	Lump Sum / Lump Sum		
42	Work as Specified for PAC 40 @ Station 123+94—20” Blowoff	Lump Sum / Lump Sum		
43	Work as Specified for PAC 41 @ Station 126+02—8” ARV	Lump Sum / Lump Sum		
44	Work as Specified for PAC 42 @ Station 131+45—10” Pumpout	Lump Sum / Lump Sum		
45a	Work as Specified for PAC BIF @ Station 132+40—Bifurcation Valve Vault	Lump Sum / Lump Sum		

ITEM NO.	DESCRIPTION OF ITEM	APPROXIMATE QUANTITY / UNIT	UNIT PRICE	TOTAL
45b	**Work as Specified for PAC BIF @ Station 132+40—Bifurcation Valve Vault, Electrical and Control Systems Only**	**Lump Sum / Lump Sum**		
46	Work as Specified for SCC 2 @ Station 3+77—10” Pumpout	Lump Sum / Lump Sum		
47	Work as Specified for SCC 3 @ Station 5+85—20” Blowoff	Lump Sum / Lump Sum		
48	Work as Specified for SCC 4 @ Station 11+26—20” Blowoff	Lump Sum / Lump Sum		
49	Work as Specified for SCC 5A @ Station 12+17—28” Nozzle	Lump Sum / Lump Sum		
50	Work as Specified for SCC 5 @ Station 15+00—10” ARV & 6” ARV	Lump Sum / Lump Sum		
51	Work as Specified for SCC 6 @ Station 15+18—4” ARV	Lump Sum / Lump Sum		
52	Work as Specified for SCC 7 @ Station 30+74—10” ARV	Lump Sum / Lump Sum		
53	Work as Specified for Coating and Painting	Lump Sum / Lump Sum		

ITEM NO.	DESCRIPTION OF ITEM	APPROXIMATE QUANTITY / UNIT	UNIT PRICE	TOTAL
54	Work as Specified for Support for Internal Pipeline Work	Lump Sum / Lump Sum		
55	Work as Specified for AFO Installation Support	Lump Sum / Lump Sum		
			TOTAL BID	

SECTION B: SUPPLEMENTAL BID ITEMS These Bid items may or may not be required. They may be deleted entirely or in part, by deductive change order(s), at the sole discretion of the District.				
ITEM NO.	**DESCRIPTION OF ITEM***	**APPROXIMATE QUANTITY / UNIT**	**UNIT PRICE**	**TOTAL**
56	Access Gate Installation – SUPPLEMENTAL WORK	6 / Gates		
57	Internal Concrete Repair for Pacheco Conduit, Santa Clara Conduit and Santa Clara Tunnel – SUPPLEMENTAL WORK	250 / Linear Ft.		
58	Carbon Fiber Reinforcement for PCCP – SUPPLEMENTAL WORK	4 / Sections		
59	Cement Mortaring for Internal Pipeline Repairs – SUPPLEMENTAL WORK	40 / Sq. Ft		
60	Welding for Internal Pipeline Repairs – SUPPLEMENTAL WORK	1000 / Linear in.		
61	Internal Pipeline Debris Removal Work – SUPPLEMENTAL WORK	40 / Cu.Ft		
62	Internal Pipeline Weko-Seal Installation – SUPPLEMENTAL WORK	3 Seals / Per Seal		
	TOTAL SUPPLEMENTAL BID	Section B Subtotal		
TOTAL BID (Section A Subtotal + Section B Subtotal)				

This page intentionally left blank.

PACHECO CONDUIT INSPECTION AND REHABILITATION PROJECT ADDENDUM NO.1

ATTACHMENT B

SIGNATURE PAGE, PAGE 2

Project No. 91214001 & 95084002
Contract No. C0629

This page intentionally left blank.

SPECIFICATIONS AND CONTRACT DOCUMENTS FOR THE CONSTRUCTION OF THE PACHECO PIPELINE INSPECTION AND REHABILITATION PROJECT

TECHNICAL PROVISIONS PREPARED BY: Nagin Morar, Amandeep Saini, Kelvin Tran

INSTRUMENTATION AND CONTROL SYSTEMS ENGINEERING

Nagin Morar
Associate Control Systems Engineer
Raw Water Operations & Maintenance Division.

7/19/17
Date

REGISTERED PROFESSIONAL ENGINEER
NAGIN MORAR
No. CS4836
CONTROL SYSTEMS
STATE OF CALIFORNIA

ELECTRICAL ENGINEERING

Amandeep Saini
Associate Electrical Engineer
Raw Water Operations & Maintenance Division.

7/19/17
Date

REGISTERED PROFESSIONAL ENGINEER
AMANDEEP S. SAINI
No. E17389
ELECTRICAL
STATE OF CALIFORNIA

This page intentionally left blank.

PACHECO CONDUIT INSPECTION AND REHABILITATION PROJECT
ADDENDUM NO.1

ATTACHMENT C

SPECIFICATIONS ARTICLE 36.01 – GENERAL ELECTRICAL REQUIREMENTS

Project No. 91214001 & 95084002
Contract No. C0629

This page intentionally left blank.

PART 1 GENERAL

1.01 SUMMARY

A. Article includes general requirements for electrical scope and related items including materials and methods. The work shall include demolishing, furnishing, installing, testing, and documentation of the equipment, materials, and installation detailed in the following articles:

Article No.	Title
36.04	Electrical Demolition and Modifications
36.10	General Electrical Design and Installation Requirements
36.11	Common Electrical Equipment
36.16	Grounding Systems
36.19	Conduits, Boxes, and Fittings
36.25	Wires and Cables, 600 Volts and below
36.34	Wiring Devices
36.49	Panelboards

B. The work shall include but not be limited to the following:

1. Electrical and telecommunication service installation and/or modification which include coordination, making arrangements, and scheduling with the utility companies the application, inspection, and testing of incoming services.

2. Site work which includes excavation, trenching, raceway installations, backfill, and resurfacing for incoming services.

3. Installation of major electrical equipment such as distribution panels.

4. Conduit, wire installation and termination to electrical equipment, wiring devices, light fixtures, motors, field devices, starters, controllers, drives, and control panels.

5. Conduit, wire, and terminations to instruments furnished under other sections including process instrumentation primary elements, transmitters, local indicators, remote and local control panels.

C. Modification and Demolition work shall include but not be limited to the following:

1. Demolition work associated with the removal of equipment from the existing facilities, including disconnecting and removing all electrical, controls, and communication wiring and conduits to equipment being removed under other related sections.

2. Start of demolition means that Contractor assumes responsibility of existing systems and the requirements for maintaining specific equipment in service and the requirements for restoration work.

3. Electrical relocation work associated with the relocation of equipment for the existing and new facilities, including disconnecting all existing wiring and conduits and providing new wiring and conduit to the relocated equipment.

4. Modifications to existing systems as required to provide the new functions as shown on the Drawings.

5. Obtain approval from Engineer prior to start of demolition work.

D. Secure electrical equipment and systems to meet all applicable seismic requirements of the California Building Code (CBC) for Seismic Design Category D or E application. Guidelines for the installation consistent with these requirements shall be provided by the Busway manufacturer and be based upon testing of representative equipment. 2. The following minimum mounting and installation guidelines shall be met, unless specifically modified by the above referenced standards.

1. Provide equipment anchorage details, coordinated with the equipment mounting provision, prepared and stamped by a state of California licensed civil or structural engineer. Mounting recommendations shall be provided by the manufacturer based upon approved shake table tests used to verify the seismic design of the equipment.
2. The equipment manufacturer shall certify that the equipment can withstand, that is, function following the seismic event, including both vertical and lateral required response spectra as specified in above codes.
3. The equipment manufacturer shall document the requirements necessary for proper seismic mounting of the equipment. Seismic qualification shall be considered achieved when the capability of the equipment meets or exceeds the specified response spectra.

1.02 REFERENCES

A. Electric equipment, materials and installation shall comply with the latest edition of the National Electrical Code (NEC), and with the latest edition of the following codes and standards:

1. National Electrical Safety Code (NESC)

2. Occupational Safety and Health Administration (OSHA)

3. National Fire Protection Association (NFPA)

4. National Electrical Manufacturers Association (NEMA)

5. American National Standards Institute (ANSI)

6. Insulated Cable Engineers Association (ICEA)

7. Instrument Society of America (ISA)

8. Underwriters Laboratories (UL)

9. Factory Manual (FM)

10. International Electrical Testing Association (NETA)

11. California Building Code

12. American Society for Testing and Materials (ASTM)

13. Institute of Electrical and Electronics Engineers (IEEE)

14. Joint Industrial Council (JIC)

B. Where reference is made to one of the above standards, the revision in effect at the time of bid opening shall apply.

1.03 SUBMITTALS

A. Submit, in accordance with the Special Provisions, shop drawings for all equipment, materials and other items furnished under Section 36.

B. Section 36 submittals shall be packaged by individual specification articles. Each submittal package shall be complete and include all equipment specified within the article. Partial article submittals will not be allowed. As an example, all Article 36.46 Motor Control Centers shall be submitted together, all Article 36.49 Panelboards shall be submitted together, etc.

C. Submit engineering anchorage and seismic calculations for mounting electrical equipment in conformance with Seismic Design Criteria.

D. Mark submittals to clearly identify proposed specific equipment including accessories, options, and features. Other equipment listed in the submittals that are not applicable to the project shall be clearly marked as being excluded or not part of the submittal.

E. The following list of submittal requirements in this Article applies to electrical equipment such as medium voltage equipment, switchgears, power transformers, switchboards, motor control centers, distribution panels, lighting panels, relay, pump, local control panels, adjustable speed drives, networking equipment related to power monitoring and SCADA, and other major electrical equipment.

1. Submit the following for review/approval prior to manufacturing:
   a. The following information shall be submitted to the ENGINEER:
      (1) Master drawing index
      (2) Elevation Drawings (Top, Front, Rear, Sides, External, and Internal)
      (3) Floor Plan, Cross Sections, and Mimic Diagram

(4) Bussing diagram
(5) Three-line diagrams
(6) Elementary diagrams
(7) Nameplate schedule
(8) AC and DC Wiring Diagram
(9) Point to Point Wiring Diagram
(10) Anchoring details
(11) Component list
(12) Conduit entry/exit locations
(13) Assembly ratings including short-circuit rating, rated voltage, rated current, and BIL
(14) Major component ratings including voltage, continuous current, interrupting ratings
(15) Cable terminal sizes
(16) Product data sheets
(17) DC battery or backup system details
(18) Feeder power monitoring equipment
(19) Protective devices and transient voltage surge suppressor details
(20) Networking equipment
(21) Power monitoring equipment

2. Where applicable, the following additional information shall be submitted to the Engineer:

   a. Busway connection
   b. Connection details between close-coupled assemblies
   c. Composite floor plan of close-coupled assemblies
   d. Key interlock scheme drawing and sequence of operations
   e. Descriptive bulletins

3. Submit the following for review prior to shipping to site for installation:
   a. Factory Acceptance Test or Certified production test reports
   b. Shop Drawings and Installation Instructions
   c. Transport dimensions and weights
   d. Packaging and shipping splits

4. Submittals – after construction and installation

   The following information shall be submitted for record purposes:
   a. Final as-built drawings and information for items listed under submittal for review/approval incorporating all changes made during the manufacturing process and during site installation (actual installed condition). As built shall include point to point wiring between equipment.
   b. Site Acceptance Report including raw data obtain during electrical testing.
   c. Installation information including equipment anchorage provisions

F. Operation and Maintenance Manuals

1. Submit operations and maintenance manual for equipment furnished under this section. The manuals shall be prepared specifically for this installation and shall include catalog data sheets, drawings, equipment lists, descriptions, parts lists, etc, to instruct operating and maintenance personnel unfamiliar with such equipment.

2. Manuals shall include the following as a minimum:

   a. A comprehensive index.
   b. A complete “As-Built” set of approved shop drawings.
   c. A complete list of the equipment supplied, including serial numbers, ranges and pertinent data.
   d. A table listing of the “as left” settings for all adjustable protective, alarm and trip setpoints.
   e. System schematic drawings “As-Built,” illustrating all components, piping and electric connections of the systems supplied under this section.
   f. Detailed service, maintenance and operation instructions for each item supplied.
   g. Special maintenance requirements particular to this system shall be clearly defined, along with special calibration, test procedures, and frequency.
   h. The operating instructions shall also incorporate a functional description of the entire system, with references to the systems schematic drawings and instructions.
   i. Printout of programmed settings
   j. Software and associated files required for programming and setting parameters
   k. Complete spare parts list with stock numbers.

1.04 UTILITY SERVICES

A. For electrical service entrance installation or modification, the contractor shall coordinate with, and comply with, all PG&E requirements and the latest edition of the PG&E Greenbook.

B. Temporary and construction power shall be the responsibility of the contractor.

1.05 CODES, INSPECTION AND FEES

A. Equipment, materials and installation shall comply with the requirements of the local authority having jurisdiction.

B. Obtain all necessary permits and pay all fees required for permits and inspections.

1.06 INTERPRETATION OF DRAWINGS

A. Electrical drawings are diagrammatic. Unless specifically dimensioned, the electrical drawings are not intended to show the exact locations of equipment and wiring devices.

B. Conduit layout shown is the general routing of raceways. Coordinate the installation with other trades and the actual supplied equipment.

C. Verify the exact locations and mounting heights of lighting fixtures, switches and receptacles prior to installation.

D. Except where dimensions are shown, the locations of equipment, fixtures, outlets and similar devices shown on the Drawings are approximate only. Exact locations shall be determined by the contractor and approved by the Engineer during construction. Obtain information relevant to the placing of electrical work and in case of any interference with other work.

E. Circuit layouts are not intended to show the number of fittings, or other installation details. Furnish all labor and materials necessary to install and place in satisfactory operation all electrical, instrumentation, and control systems shown.

F. Redesign of electrical or mechanical work, which is required due to the contractor's use of an alternate item, arrangement of equipment and/or layout other than specified in these Specifications, shall be done by the contractor at his/her own expense. Redesign and detailed plans shall be submitted to the Engineer for approval. No additional compensation will be provided for changes in the work, either his/her own or others, caused by such redesign.

1.07 QUALIFICATIONS

A. The manufacturer of the assembly shall be the manufacturer of the major components within the assembly.

B. The manufacturer of equipment listed in Section 36 shall have produced similar electrical equipment for a minimum period of five (5) years. When requested by the Engineer, an acceptable list of installations with similar equipment shall be provided demonstrating compliance with this requirement.

1.08 MATERIALS AND EQUIPMENT

A. Materials and equipment shall be new, except where specifically identified on the Drawings to be re-used.

B. Equipment and materials shall be the products of reputable, recognized suppliers having adequate experience in the manufacture of these particular items. Similar items shall be by one manufacturer. All equipment shall be designed for the service intended and shall be of rugged construction of ample strength for all stresses which may occur during fabrication, transportation, erection, and during continuous or intermittent operation.

1. All equipment and materials shall be listed by UL, where applicable, unless otherwise specified or as approved by the Engineer.

2. All self-contained components of standard manufacture for which a listing service is provided shall be UL listed. Where special non-standard

assemblies are fabricated by the contractor, subassemblies therein shall bear the UL label whenever possible.

3. All electrical equipment shall conform to or exceed the current standards of the ANSI, IEEE, and NEMA, where applicable.

C. Contractor shall take field measurements to ensure that product being provided will fit and have the necessary code required clearances when installed.

D. Provide quality control in accordance with the Special Provisions.

1.09 SUBSTITUTION

A. Electrical equipment, components, protective devices, wires, and conduits shown in the drawings have been designed using project basis design documents. The design of the electrical system shown are typically based on the vendor in the drawing or first-named manufacturer in the specifications. The equipment shown and rating meets the project minimum requirements. Physical dimensions, electrical ratings, system performance and mechanical properties shall be adjusted in case an equivalent product or equipment is proposed other than listed at the expense of the contractor. All additional costs associated with acceptance of equivalent, or substituted project shall be at contractor's expense.

B. Engineering review time in excess of one (1) hour per equipment substitution per submittal shall be chargeable to the contractor.

C. There shall be no change in contract time allowed as a result of the substitution or substitution review process.

D. Refer to the Special Provisions regarding material and product substitution.

1.10 EQUIPMENT TRANSPORT AND STORAGE

A. Investigate each space in the structure through which equipment must pass to reach its final location. Coordinate shipping splits with the manufacturer to permit safe handling and passage through restricted areas in the structure.

B. The equipment shall be kept upright at all times during storage and handling. When equipment must be tilted for passage through restricted areas, brace the equipment to ensure that the tilting does not impair the functional integrity of the equipment.

C. Unless otherwise noted, storage of equipment or construction materials is not allowed on site. Designated construction areas may be pre-arranged or specified as part of the construction documents.

D. Damages to surfaces due to transportation of equipment shall be repaired at the contractor's expense.

1.11 HAZARDOUS AREAS (AS NEEDED)

A. Equipment, materials and installation in areas designated as hazardous on the Drawings shall comply with NEC Articles 500, 501, 502 and 503.

B. Equipment and materials installed in hazardous areas shall be UL listed for the appropriate hazardous area classification.

1.12 IDENTIFICATION

If not provided under each article, the following identification shall apply.

A. EQUIPMENT IDENTIFICATION

1. Identify all equipment furnished under this section with the name of the equipment it serves as detailed on the oneline drawings. Nameplate list shall be submitted for review and approval.

2. Nameplates shall be engraved, laminated plastic, not less than 1/16 inches thick by 3/4 inches high by 2 1/2 inches wide with 3/16 inches high white letters on a black background.

3. Nameplates shall be screw mounted to NEMA enclosures using stainless steel screws. Epoxy shall be applied to the backside of the nameplate to seal against moisture. Nameplates shall be bonded to all other enclosure types using an epoxy, or similar, permanent waterproof adhesive. Two-sided foam adhesive tape is not acceptable. Where the equipment size does not have space for mounting a nameplate, the nameplate shall be permanently fastened to the adjacent mounting surface.

B. RACEWAY IDENTIFICATION

1. Junction boxes shall have unique identification. In addition, power and control circuits passing through the junction box shall also be identified on the inside cover of the junction box.

2. Conduits shall be labeled. Label shall indicate voltage, source equipment, service equipment, and system type.

1.13 SEISMIC RESTRAINTS

A. Refer to the seismic restraint criteria specified herein.

B. Electrical equipment shall be securely fastened in placed. When electrical equipment over twenty pounds (20 lbs.) are suspended above ten (10) feet, additional seismic restraints shall be installed.

1.14 TESTING AND PROGRAMMING

A. Test electrical equipment, component, and materials furnished under this section. Test each equipment functionally as well as part a system wide functional test. Test under manual and automatic control.

B. Electrical equipment and controls furnished in other sections shall also be tested under Article 36.

C. Programmable equipment and systems shall be programmed and be functionally tested. Submit final settings and parameters as part of record documents.

D. Equipment, sensors, devices, or systems that are annunciated remotely through remote terminal, human machine interfaces, or web-client (pages) shall be brought into these various interfaces by updating software program, webscreens, or both.

1.15 RECORD DRAWINGS

A. As the work progresses, legibly record all field changes on a set of Project Contract Drawings as specified in these Specifications, to produce the “Record Drawings.”

B. Record Drawings shall accurately show the installed condition of the following items:

1. Oneline (Single Line) diagrams.
2. Raceways and pullboxes – show exact routing and location; homerun notations in record drawings are not acceptable
3. Conductor sizes and conduit fills.
4. Panel Schedules.
5. Control schematic diagrams.
6. Lighting Fixture Schedules.
7. Lighting fixture, receptacle and switch outlet locations.
8. Underground raceway and duct bank routing.
9. Plan view, sizes and locations of switchgear, distribution transformers, substations, motor control centers and panelboards. Indicated code required working clearances.
10. Fire alarm system components, wiring and routing of raceways.
11. Security system components, wiring and routing of raceways.
12. Communication system components, wiring and routing of raceways.
13. Power monitoring system.
14. Grounding system.

C. Submit a schedule of control wiring raceways and wire numbers, including the following information:

1. Circuit origin, destination and wire numbers.

2. Field wiring terminal strip names and numbers.

D. Submit directory of panel schedules in spreadsheet format.

E. Record point-to-point connection diagrams showing schedule of control wiring raceways, wire numbers, conduit tags, and wire identification.

F. Review shop drawings of equipment furnished under other related sections and prepare coordinated control wiring interconnection diagrams.

1.16 QUALITY ASSURANCE

Equipment, materials, or installation that failed during testing shall be replaced. Repair of defective equipment that have failed during acceptance testing shall be at no additional cost or change in contract.

PART 2 PRODUCTS

NOT USED

PART 3 EXECUTION

3.01 SITE VERIFICATION

A. Prior to start of work, Contractor shall review existing as-builts and shall perform site walk to have a general understanding of the existing conditions and systems.

B. Obtain the existing equipment shop drawings from the Engineer before attempting to make any modifications to the existing equipment wiring. Verify all existing wiring and connections for correctness. If record drawings are not available, trace all circuits in the field and develop the wiring diagrams necessary for completion of the work.

3.02 DEMOLITION AND MODIFICATION WORK

A. Identify and mark equipment, wiring devices, and raceways to be demolished. Identify source power, control, and monitoring connection. Isolate circuits prior to demolition.

B. Provide alternate sources or means to power, control, and monitor systems impacted by demolition or modification work.

C. Coordinate and schedule the sequence of demolition with the sequence of construction to maintain plant operations. Remove and demolish equipment and materials in such a sequence that the existing and proposed plant will function properly with no disruption of operations.

D. Demolish all power supply, control, and communication wires back to their sources or upstream protective device.

E. Remove abandoned conduits, boxes, and unused equipment.

F. Paint and refinish surfaces and footprints left as part of demolition work. Match adjacent finished.

3.03 ELECTRICAL ROUGH-IN AND EQUIPMENT LAYOUT

A. Electrical drawings show the general locations of equipment, devices, and raceways. They are not exact. Prior to installation of conduits, raceways, and

equipment, contractor shall mark and rough-in location of the electrical system. Contractor shall coordinate location with other trades. Contractor shall walk the site with the inspector and engineer to review rough-in and layouts. Required working clearance shall be also marked during this walk-through. Contractor shall obtain approval prior to installation of equipment from Engineer.

B. Unless otherwise approved by the Engineer, conduit shown on the Drawings shall be concealed. Raceways installed exposed shall be pre-approved during rough-in. Route exposed conduits near the ceiling or along walls of the areas through which they pass and shall be routed to avoid conflicts with HVAC ducts, cranes hoists, monorails, equipment hatches, doors, windows, etc.

C. Approved concealed raceways locations include concrete floor slabs, walls or ceilings and above suspended ceilings, or in partitions as required.

D. Where circuits are shown as “home runs”, all necessary fittings and boxes shall be provided for a complete raceway installation. Where home-runs indicate conduit is to be installed concealed or exposed, the entire branch circuit shall be installed in the same manner.

3.04 SLEEVES AND FORMS FOR OPENINGS

A. Provide and place all sleeves for conduits penetrating floors, walls, partitions, etc. Locate all necessary slots for electrical work and form before concrete is poured.

B. Exact locations are required for stubbing up and terminating concealed conduit. Obtain shop drawings and templates from equipment vendors or other subcontractors and locate the concealed conduit before the floor slab is poured.

C. Where setting drawings are not available in time to avoid delay in scheduled floor slab pours, the Engineer may allow the installations of such conduit to be exposed. Requests for this deviation must be submitted in writing. No additional compensation for such change will be allowed.

D. Seal all openings, sleeves, penetration and slots as specified in Article 29. Seal openings and penetration through fire rated construction to maintain or exceed fire and thermal ratings of the structure.

3.05 CUTTING AND PATCHING

A. Cutting and patching shall be done in compliance with modifications and repair to concrete as specified in Section 29.

B. Prior to core drill, x-ray concrete walls and floors. Core drill holes in concrete floors and walls as approved.

C. Install work at such time as to minimize the amount of cutting and patching.

D. Do not cut joists, beams, girders, columns or any other structural members.

E. Cut opening only large enough to allow installation of the conduit.

F. Patching to be of the same kind and quality of material as was removed.

G. The completed patching work shall restore the surface to its original appearance or better.

H. Patching of waterproofed surfaces shall render the area of the patching completely waterproof.

I. Remove rubble and excess patching materials from the premises.

J. When existing conduits are cut at the floor line of wall line, they shall be filled with grout or patching material approved by the Engineer.

3.06 INSTALLATION

A. Install according to manufacturer’s installation instructions.

B. Work not installed according to the Drawings and Specifications shall be subject to change as directed by the Engineer at no additional cost to the District.

C. Electrical equipment shall be protected against mechanical and water damage. Store electrical equipment in dry permanent shelters. Do not install electrical equipment in place until structures are weather-tight.

D. Provide temporary power connection to equipment space heaters as required by the equipment manufacturer’s storage instructions.

E. Damaged equipment shall be replaced or repaired by the equipment manufacturer, at the Engineer's discretion and at no additional cost to the District.

F. Repaint any damage to factory-applied paint finish using touch up paint furnished by the equipment manufacturer. The entire damaged panel or section shall be repainted in accordance with the field painting requirements specified in Section 29 at no additional cost to the District.

3.07 MANUFACTURERS SERVICE

A. Provide manufacturer's services for testing and startup of the equipment in accordance with the requirements of each individual specification article.

B. Testing and startup shall not be combined with training. Testing and start up time shall not be used for manufacturer's warranty repairs.

3.08 TRAINING

A. Provide manufacturer's services for training of plant personnel in operation and maintenance of the equipment furnished under Section 36 in conformance with the requirements of the Special Provisions. The training and instruction shall be directly related to the system being supplied.

B. The training program shall represent a comprehensive program covering all aspects of the operation and maintenance of each system. Provide detailed O&M

manuals to supplement the training courses. The manuals shall include specific details of equipment supplied and operations specific to the project.

C. All training schedules shall be coordinated with, and at the convenience of, the District. Shift training may be required to correspond to the District's working schedule.

D. All dimensions shall be field verified at the job site and coordinated with the work of all other trades.

E. Document all changes made to the wiring diagrams and return a marked-up set of Record Drawings to the District after the work is complete.

END OF ARTICLE

This page intentionally left blank.

PACHECO CONDUIT INSPECTION AND REHABILITATION PROJECT ADDENDUM NO.1

ATTACHMENT D

SPECIFICATIONS ARTICLE 36.04 – ELECTRICAL DEMOLITION AND MODIFICATIONS

Project No. 91214001 & 95084002
Contract No. C0629

This page intentionally left blank.

PART 1 GENERAL

1.01 SUMMARY

A. Article includes all labor, materials, and incidentals required to demolish, modify and/or remove the electrical and instrumentation systems and equipment as shown on the Drawings and/or specified in these Specifications. Unless specifically noted as being reused, all conduit, wire, boxes, etc. detailed on the Drawings shall be new equipment installed under this Work.

B. The electrical modifications and removals work shall consist of, but not necessarily be limited to, removal or modifications of existing equipment in the following generalized categories:

1. Modification of motor control centers, motor starters, panels, and other devices as indicated on the Drawings.

2. Any electrically powered or controlled equipment indicated as being removed in this Contract and associated electrical appurtenances.

3. Existing electrical equipment or electrical equipment associated with mechanical or process equipment which must be removed or relocated due to conflicts with new construction.

4. Electrical control devices, starters, wiring, and other miscellaneous devices associated with equipment that will be modified or reused under this Contract.

5. Instrumentation and control equipment and related conduit and wire associated with equipment being removed under this Contract.

C. Related Articles:

1. Article 16.01, General Work Constraints.

1.02 SUBMITTALS

A. All submittals shall be in accordance with Articles 20.01 and 36.01.

B. Submit detailed time schedule for equipment which will be either modified or removed under this Work. Include details of work to be done, anticipated duration of the work, impact of the work on plant operations, coordination with other trades, etc.

C. Submit shop drawings for all modified motor control centers (MCC), switchboards, and other panels.

PART 2 PRODUCTS

NOT USED

PART 3 EXECUTION

3.01 MODIFICATIONS

A. All MCCs, switchboards, and other panels requiring modification under this Work shall comply with the following general requirements:

1. Equipment removed from service shall have suitable covers placed over any unused exterior panel holes. Covers shall be painted to match the existing panel and shall be securely retained on the panel with machine screws and nuts.

2. Newly installed equipment shall be mounted, connected, and identified consistent with the other equipment in or on the panel.

3. Devices installed in compartmentalized panels shall be provided with new doors and interior mounting pans as required to match the existing panel construction style.

4. Mounting holes required for new equipment shall be neatly cut and de-burred.

5. Nameplates shall be provided for all new equipment mounted on the exterior of existing panels. Nameplates shall match the existing panel nameplates.

6. Interior panel wiring for newly added devices shall match the existing panel wiring and mounting.

7. All modifications made to 480 volts power system panels shall be retrofit with components furnished by the original panel manufacturer to maintain all original UL and NEMA labeling and certifications.

B. All modifications made to existing MCCs, switchboards, and other panels shall be fully described in shop drawing submittals. The submittals shall include the following as a minimum:

1. Panel elevation drawings specifically identifying the exact equipment that will be removed.

2. Revised panel wiring diagrams specifically indicating the revised connections of the new devices.

3. Technical details on the new equipment that will be added including electrical characteristics, physical sizing, and installation requirements.

4. Enclosure or housing modifications required to accept the new equipment including nameplates and enclosure alterations.

5. Engraving schedule details for all new nameplates.

3.02 EQUIPMENT TO BE REMOVED

A. Only the major electrical and instrumentation equipment to be removed is shown or noted on the Drawings and failure to detail all equipment exactly shall not relieve the contractor from the responsibility for its removal as directed by the Engineer. Removal items such as wire, conduit, junction boxes, etc. are in general not detailed on the Drawings.

B. Where removal of electrical, instrumentation, or any other equipment with wired connections is called for in this Work, the work shall include the removal of the associated electrical hardware as specified in these Specifications unless noted otherwise.

C. In general, all wiring shall be removed from the conduits. Boxes and fittings and all exposed conduit shall be removed. Concealed conduits shall be cut flush with the floor, wall, or ceiling and plugged with grout or other permanent material.

D. Electrical power, control, or instrumentation equipment, exposed conduit, wiring, etc. rendered inoperative by modifications to existing equipment under these articles or other sections of this contract shall be removed unless specifically noted that it is to be abandoned in place.

E. Not all existing conduits are shown on the Drawings. In general, existing conduits are shown only where they may be reused, or where they potentially affect or may be affected by new work under this Contract, or for providing useful background information to the contractor regarding the existing electrical installation.

F. Where existing conduit or wire associated with removed equipment is to be reused, it will be specifically noted on the Drawings. Where existing conduit is clearly required to be removed or relocated including the buried or embedded portion due to new construction, it will be noted as such on the Drawings. In instances where existing electrical underground or concealed work is close to, but not clearly in the way of, new construction, it shall be the contractor's responsibility to include that portion of work in the Contract scope if required.

G. No existing conduits, wiring, or electrical appurtenances shall be removed, or in any way damaged, unless allowed by the provisions of this Article. Any existing conduits or wiring or other electrical appurtenances that are encountered as an obstruction to new construction which are not covered by the provisions of this Specification shall be brought to the attention of the District.

H. Where functions of existing cables and/or conduits are replaced by new cable and/or conduits because of additions of new panels, instruments, revision to control strategy, etc., the existing cables and exposed conduits shall be removed unless noted otherwise. Concealed conduits shall be retained and marked as spares unless noted otherwise.

I. Equipment removed shall not be reused under this contract unless specifically noted on the Drawings or Specifications.

J. To minimize disruptions to the existing plant operations, the schedule for modifications and removal of existing equipment shall be coordinated with, and approved by, the Engineer and District.

K. Where any existing circuits are disconnected due to abandonment or removal of existing equipment, the remaining motor starters or circuit breakers for these circuits shall be retagged as spares. At motor control centers, the tags shall be laminated nameplates matching the existing ones. In circuit breaker panels, the circuit card or listing shall be changed.

3.03 DEMOLITION

A. The contractor shall survey the existing electrical systems and equipment identified for removal with representatives from the other trades and the Engineer prior to performing any demolition work. Prior to removal, identify all conduit and equipment to be removed with tags or paint.

B. Where a piece of equipment is to be removed, all associated ancillary components (e.g. solenoid valves, pressure switches, etc) and associated wiring and conduit shall also be removed.

C. Building or structures scheduled for complete demolition shall be made safe from electrical shock hazard prior to demolition. Disconnect all electrical power, communications, alarms, and signal systems.

D. Remove electrical work associated with equipment scheduled for demolition except those portions indicated to remain or be reused.

E. Remove unused exposed conduit and wiring back to point-of-concealment, including abandoned conduit above accessible ceiling finishes. Remove unused wiring in concealed conduits back to source (or nearest point of usage).

F. Disconnect abandoned outlets and remove devices. Remove abandoned outlets if conduit servicing them is abandoned and removed. Provide blank covers for abandoned outlets which are not removed.

G. Disconnect and remove abandoned panelboards, disconnect switches, control stations, distribution equipment, etc.

H. Disconnect and remove abandoned lighting fixtures. Remove brackets, stems, hangers and other accessories.

I. Repair adjacent construction and finishes damaged during demolition and extension work.

J. Where electrical systems pass through the demolition areas to serve other portions of the premises, they shall remain or be suitably relocated and the system restored to normal operation.

K. Coordinate outages in electrical systems with the Engineer. Where duration of proposed outage cannot be allowed by the District, provide temporary connections as required to maintain service.

L. Trace out existing wiring that is to be relocated or removed and perform the relocation or removal work as required for a complete operating and safe system.

M. Continuous service is required on all circuits and outlets affected by these changes, except where the District will permit an outage for a specific time. Obtain Engineer's consent before removing any circuit from continuous service.

N. Remove exposed conduits, wireways, outlet boxes, pull boxes and hangers made obsolete by the alterations, unless specifically designated to remain. Patch surfaces and provide blank covers for abandoned outlets which are removed.

O. All equipment, materials, controls, motor starters, branch and feeder breakers, panelboards, transformers, wiring, raceways, etc, furnished and installed to temporarily keep circuits energized shall be removed when the permanent installation is fully operational.

3.04 DISPOSITION OF REMOVED MATERIALS AND EQUIPMENT

A. In general, it is intended that material and equipment indicated to be removed and disposed of by the contractor shall, upon removal, become the contractor's property and shall be disposed of off the site by the contractor, unless otherwise directed by the District. A receipt showing acceptable disposal of any legally regulated materials or equipment shall be given to the Owner.

B. Ballasts in each existing lighting fixture shall be assumed to contain PCB's unless specifically marked with a label indicating "No PCBs." Remove ballasts from each lighting fixture and pack them in accordance with EPA PCB regulations. Ship ballasts in approved containers to an EPA-approved recycling facility and pay all shipping, packaging and recycle costs.

C. PCBs and PCB contaminated equipment shall be removed, packaged, shipped and disposed of in accordance with all State and Federal regulations. Obtain the services of a firm licensed and regularly engaged in the removal of PCBs and PCB-contaminated equipment. The firm shall be licensed in the State or States in which the contaminated material is handled, shipped and disposed. Pay all fees associated with the removal of the contaminated material and equipment and provide documentation showing acceptable disposal.

D. Should the contractor discover PCB-contaminated equipment that was not identified, they shall cease work on or about the equipment and notify the Engineer immediately. The contractor shall then proceed with the work as directed by the Engineer.

END OF ARTICLE

This page intentionally left blank.

PACHECO CONDUIT INSPECTION AND REHABILITATION PROJECT ADDENDUM NO.1

ATTACHMENT E

SPECIFICATIONS ARTICLE 36.10 – GENERAL ELECTRICAL DESIGN AND INSTALLATION REQUIREMENTS

Project No. 91214001 & 95084002
Contract No. C0629

This page intentionally left blank.

PART 1 GENERAL

1.01 SUMMARY

A. Article Includes:

1. Specific methods and requirements pertinent to the installation of the electrical and instrumentation work under this Contract.

2. The requirements of this article shall be in addition to those specifically detailed in other Articles of these Specifications and shown on the Drawings.

3. The requirements of this article shall be complied with where the project Drawings and Specifications do not contain specific design or installation details. In general, all requirements of the National Electric Code (NEC) shall be followed except as enhanced or modified by the requirements of this Article.

B. Related Articles:

1. Article 36.01, General Electrical Requirements

PART 2 PRODUCTS

NOT USED

PART 3 EXECUTION

3.01 RACEWAYS INSTALLATION

A. No conduit smaller than 3/4" shall be used.

B. No underground conduit smaller than 1" shall be used.

C. Use PVC wrapped rigid conduit in chemical feed rooms and transition from underground to above ground.

D. Use of EMT shall be pre-approved and shall be limited.

E. If not noted in the drawings, enclosures shall be NEMA 4X.

F. Underground pullboxes shall be no smaller than 17” x 30” x 24” (Deep).

3.02 CONDUCTOR INSTALLATION

A. Number 12 AWG shall be the minimum size for power wires.

B. All electrical wire and cables shall be installed in conduits.

C. No more than one (1) 480 VAC circuit shall be installed in any one conduit.

D. No more than three (3) 120 VAC branch circuits shall be run in any one conduit.

E. Number 14 AWG shall be the minimum control wire size except that connections to I/O boards inside a PLC shall be made using No. 18 AWG TFN.

F. Signal conductors carrying analog instrumentation signals (4-20 mA dc or 1-5 V dc) shall not be run in the same conduit or pull boxes with ac power conductors.

G. Fire alarm cabling shall be in conduit.

3.03 CONTROL AND PROTECTIVE DEVICES

A. Manual motor starters with overload elements shall be provided for all fractional horsepower 120 Vac motors.

B. No motor starter smaller than a NEMA Size 1 unit shall be allowed for 208 volts or 480 volts three-phase motors.

3.04 GROUNDING

Provide grounding bus bar tied back to the main service entrance ground or the last grounding point of an alternately derived system at the following location:

1. Main Point of Entrance for Communications (telephone, internet, microwave, etc)
2. At each RTU, I/O, and PLC Cabinet
3. At each main distribution frame or intermediate distribution frame room
4. At each SCADA Room
5. At each Server Room
6. At each Communication Room

END OF ARTICLE

PACHECO CONDUIT INSPECTION AND REHABILITATION PROJECT ADDENDUM NO.1

ATTACHMENT F

SPECIFICATIONS ARTICLE 36.11 – COMMON ELECTRICAL EQUIPMENT

Project No. 91214001 & 95084002
Contract No. C0629

PART 1 GENERAL

1.01 SUMMARY

This Article provides the requirements for common electrical equipment not specified in separate articles that are typically employed in an industrial facility, however, not all components specified in this Article are necessarily utilized on this project.

1.02 RELATED ARTICLES:

A. Article 36.01, General Electrical Requirements.

1.03 REFERENCES

A. NEMA – National Electrical Manufacturers Association (NEMA)

B. UL – Underwriter's Laboratory

1.04 EQUIPMENT LIST

A. The following equipment is included under this Article:

1. Enclosures
2. Switches
3. Enclosed Circuit Breakers
4. Motor Starters
5. Transformers
6. Control Stations

1.05 SUBMITTALS

A. Submittals shall be in accordance with the Special Provisions and Article 36.01.

B. Submittals shall contain detailed catalog information describing electrical characteristics of the product being submitted.

C. Submit product dimensioned drawings to show physical and mechanical characteristics of all equipment including weights.

D. Submit transformer no-load and load losses.

PART 2 PRODUCTS

2.01 ENCLOSURES

A. Unless otherwise shown on the Drawings, electrical enclosures shall be furnished based on the NEMA classification of the area as detailed on the Drawings. For areas where a NEMA designation is not defined on the Drawings, the following shall be used:

1. NEMA 1 - indoors, dry, non-process, above finished grade locations. Typical locations - administration areas, office areas, laboratories, control rooms, storage rooms,

2. NEMA 3X – outdoor, wet location, non-hose down, within the area but not directly adjacent or within five feet of corrosive agents. Typical locations outdoors adjacent to chemical tanks

3. NEMA 3R - outdoor, wet location, non-hose down, non-corrosive areas, capable with additional ventilation. Typical locations outdoors away from chemical tanks

4. NEMA 4 – indoor or outdoor, wet and direct hose down, non-corrosive areas, stainless steel. Typical locations no corrosive chemicals present, basements, vaults

5. NEMA 4X - indoor or outdoor, wet and direct hose down, corrosive areas, fiberglass reinforced polyester. Typical locations corrosive chemicals present, basement, vaults

6. NEMA 7 – hazardous locations.

7. NEMA 12 - indoors, dry, above finished grade locations, without knockouts, protection of personnel from hazardous parts. Typical locations process areas, non-corrosive

8. NEMA 12X - indoors, dry, above finished grade locations, with knockouts, protection of personnel from hazardous parts. Typical locations process areas, corrosive environment

B. Enclosure color shall be ANSI Gray 61, unless otherwise noted.

2.02 SWITCHES

A. Disconnect Switches

1. Disconnect switches shall be horse power rated, heavy-duty, quick-make, quick-break, visible blades, 600 volts, three-pole with full cover interlock, interlock defeat and flange-mounted operating handle. Rating per the drawings.

2. Switches shall be six-pole for two-speed devices.

3. For disconnect switches installed at motors fed from adjustable speed drives (ASD), the switch shall be provided with electrical interlock contacts which are actuated by the pivot arm before the main switch blades break. Unless otherwise specified, two (2) sets of one normally-open and one normally-closed contacts shall be provided for each switch.

4. Switches shall be as manufactured by the Schneider, General Electric, Cutler-Hammer, Allen-Bradley, or equal.

B. Fused Disconnect Switches

1. Fused disconnect switches shall be heavy-duty, quick-make, quick-break, visible blades, 600 volts, three-pole with full cover interlock, interlock defeat and flange-mounted operating handle.

2. Fuses shall be rejection type, 600 volts, 200,000 A.I.C., dual-element, time-delay, Bussman Fusetron, Class RK-5 or equal.

3. Switches shall be as manufactured by the Schneider , General Electric, Cutler-Hammer, Allen-Bradley, or equal.

2.03 ENCLOSED CIRCUIT BREAKER

A. Molded case circuit breaker: 600 volts, three-pole with integral fully-adjustable solid-state trip device. Trip device shall be temperature insensitive and have the following characteristics and functions:

1. Independently-adjustable long-time pick-up and delay.

2. Independently-adjustable short-time pick-up and delay with i^2t in and out switch.

3. Adjustable instantaneous.

4. Independently-adjustable ground fault pick-up and delay.

5. Trip mode targets for overload, short-circuit and ground fault.

6. Long-time pick-up light.

B. Circuit breaker shall be housed in an enclosure and shall have a short circuit rating of 65,000 amps RMS symmetrical at 480 volts.

C. Circuit breaker shall be furnished with solid neutral and solid ground assemblies.

D. Pilot lights to indicate breaker status

E. Circuit breaker shall be as manufactured by Schneider, General Electric Co., Cutler-Hammer, or equal.

2.04 MOTOR STARTERS

A. Manual Motor Starters

1. Manual starters shall be suitable for the voltage and number of phases shall be non-reversing, reversing or two-speed type as shown on the Drawings. NEMA sizes shall be as required for the horsepower shown on the Drawings. Manual starters shall have motor overload protection in each phase.

2. Pilot lights to indicate motor starter status, START, STOP

3. Manual motor starters shall be as manufactured by the Schneider, General Electric, Cutler-Hammer, Allen-Bradley, or equal.

B. Combination Magnetic Motor Starters

1. Motor starters shall be a combination motor circuit protector, contactor, and overload relay.

2. Contactors shall be two- or three-pole, single- or three-phase as required, 60 Hz, 600 volts, magnetically-operated, full-voltage, non-reversing unless otherwise shown on the Drawings. NEMA sizes shall be as required for the horsepower shown on the Drawings. Minimum size shall be NEMA Size 1.

3. Each motor starter shall have a 120 volts operating coil and control power transformer. Transformer primaries and secondaries shall be equipped with time-delay fuses. Three-phase starters shall have three overload relays. Three reversible auxiliary contacts shall be provided as spares in addition to contacts shown on the Drawings.

4. Overload relays shall be adjustable and manually-reset.

5. Furnish built-in control stations and indicating lights where shown on the Drawings.

6. Motor circuit protectors shall be molded-case with adjustable magnetic-trip only. They shall be specifically designed for use with magnetic motor starters.

7. Combination motor starters shall be fully-rated for 65,000 amps RMS symmetrical.

8. Two-speed starters shall be used for single- or two-winding motors as shown on the Drawings.

9. Combination magnetic motor starters shall be as manufactured by the Schneider, General Electric, Cutler-Hammer, Allen-Bradley, or equal.

2.05 CONTROL STATIONS

A. Control stations shall be heavy-duty type, with full-size operators.

B. Pushbuttons noted as emergency stop on the Drawings shall be momentary-contact stop buttons and have a latching mechanism that can be padlocked to retain the pushbutton in the open position.

C. Control stations shall be Square D Class 9001, or similar by Cutler-Hammer, General Electric Co., Allen-Bradley, or equal.

2.06 TRANSFORMERS

A. General Purpose Dry-Type

1. Dry-Type transformers shall be two-winding with kVA and voltage ratings as shown on the Drawings. Transformer shall incorporate a 220 degree C insulation system and be designed not to exceed 115 degrees C temperature rise above a 40 degree C ambient full load.

2. Five full-capacity taps shall be furnished, two 2-1/2 percent above and two 2-1/2 percent below rated primary voltage.

3. Windings shall be copper.

4. Transformers shall be furnished with mounting hardware.

5. Transformers shall have common core construction with low hysteresis and eddy current losses. The core flux density shall be below the saturation point to prevent overheating caused by harmonic distortion.

6. Transformer impedance shall be a minimum of 3 percent and a maximum of 5 percent.

7. Transformers shall be compliant with CEC Title 20, Article 1605, Table T-3, and meets the EPA Energy Star Program.

8. Transformers serving communications equipment shall be K-rated transformers. Transformers shall be built in accordance with ANSI C89.2 and NEMA ST-20, shall be UL listed and suitable for non-sinusoidal current loads with a K-factor of 4 unless noted otherwise on the Drawings.

9. Transformers shall be manufactured by Sorgel, General Electric Co., Cutler-Hammer, or equal.

B. Control Transformers

If incoming power supply as shown on the drawings is other than 120 VAC, each control panel shall be provided with a control transformer. Control transformers shall comply with the following requirements:

1. Each control transformer shall be rated 480/120 V or 240V/120V single phase, 2 wire, 60 Hz, and shall conform to the applicable requirements of NEMA ST 1. The transformer shall have adequate volt-ampere capacity for all connected control function loads indicated, plus an additional 20 percent capacity. Transformer capacity shall be increased as required for any additional non- control function loads, such as condensation heaters, ventilation fans, or air conditioning.

2. Each control transformer shall be feed from the load side of the panel or motor controller disconnect. Control transformers rated 480/120 V shall be provided with two primary fuses rated to interrupt 50,000 A (minimum) at 600 V. One transformer secondary lead shall be provided with a time delay, slow-blow fuse rated to interrupt 10,000 A at 250 V, and the other secondary lead shall be grounded. All fuses shall be provided with blown fuse indicators.

3. Where control circuit power is other than 120V, refer to the drawings for specific required control voltage. Sizing and protection shall be similar.

PART 3 EXECUTION

3.01 FACTORY TESTING

A. The following standard factory tests shall be performed on the equipment provided under this section. All tests shall be in accordance with the latest version of UL and NEMA standards.

1. Insulation check to ensure the integrity of insulation and continuity of the entire system

2. Visual inspection to ensure that the switch matches the specification requirements and to verify that the fit and finish meet quality standards

3. Mechanical tests to verify that the switch's power sections are free of mechanical hindrances

4. Electrical tests to verify the complete electrical operation of the switch and to set up time delays and voltage sensing settings of the logic.

B. The manufacturer shall provide three (3) certified copies of factory test reports.

3.02 ELECTRICAL ROUGH-IN

A. CLEARANCE REQUIREMENT

1. Mark footprint of proposed equipment in proposed location. Review with Engineer.

2. Observe alignment with existing equipment.

3. Tape required NEC clearance.

B. INSTALLATION HEIGHT

1. Display shall be at eye level between 60” – 65” above finished floor.

2. Operable mechanism shall be at least 42” but no more than 66” above finished floor.

3.03 INSTALLATION

The Contractors shall install all equipment per the manufacturer’s recommendations and the contract drawings.

3.04 FIELD QUALITY CONTROL

A. Provide the services of a qualified factory-trained manufacturer’s representative to assist the contractor in installation and start-up of the equipment specified under this section for a period of 5 working days. The manufacturer’s representative shall provide technical direction and assistance to the contractor in general assembly of the equipment, connections and adjustments, and testing of the assembly and components contained therein.

B. The contractor shall provide three (3) copies of the manufacturer’s field start-up.

3.05 MANUFACTURER’S CERTIFICATION

A. A qualified factory-trained manufacturer’s representative shall certify in writing that the equipment has been installed, adjusted and tested in accordance with the manufacturer’s recommendations.

B. The Contractor shall provide three (3) copies of the manufacturer’s representative’s certification.

3.06 TRAINING

A. The contractor shall provide a training session for up to fifteen (15) owner’s representatives for two (2) normal workdays at a jobsite location determined by the owner.

B. The training session shall be conducted by a manufacturer’s qualified representative. The training program shall consist of the instruction on the operation of the assembly and major components within the assembly.

3.07 FIELD SERVICE

The manufacturer of the MTS and ATS shall also have a national service organization that is available throughout the continuous United States and is available on call 24 hours a day, 365 days a year. Include 2 years of field service, parts, and labor in the warranty.

END OF ARTICLE

This page intentionally left blank.

PACHECO CONDUIT INSPECTION AND REHABILITATION PROJECT ADDENDUM NO.1

ATTACHMENT G

SPECIFICATIONS ARTICLE 36.16 – GROUNDING SYSTEM

Project No. 91214001 & 95084002
Contract No. C0629

This page intentionally left blank.

PART 1 GENERAL

1.01 SUMMARY

A. Article Includes:

A. All labor, materials, equipment and incidentals required to install a complete grounding system in strict accordance with Article 250 of the National Electrical Code (NEC), as shown on the Drawings and as specified in these Specifications.

B. All raceways, conduits and ducts shall contain equipment grounding conductors sized in accordance with the NEC. Minimum sizes shall be No. 12 AWG.

1.02 RELATED ARTICLES:

A. Article 36.01 - General Electrical Requirements.

B. Article 36.19 - Raceways, Boxes, Fittings, and Supports

1.03 REFERENCES

A. American National Standards Institute (ANSI)/ Institute of Electrical and Electronics Engineers (IEEE).

1. IEEE Std. 142 – IEEE Recommended Practice for Grounding of Industrial and Commercial Power Systems.

2. IEEE Std. 837 – IEEE Standard for Qualifying Permanent Connections used in Substation Grounding

3. IEEE Std. 1100 – IEEE Recommended Practice for Power and Grounding Electronic Equipment

B. American National Standards Institute (ANSI)/National Science Foundation (NSF)

1. ANSI/NSF 60 – Drinking Water Treatment Chemicals – Health Effects

C. American Society for Testing and Materials (ASTM).

1. ASTM B 3 – Standard Specification for Soft or Annealed Copper Wire.

2. ASTM B 187 – Standard Specification for Copper Bar, Bus Bar, Rod, and Shapes.

3. ASTM B 8 – Standard Specification for Concentric-Lay-Stranded Copper Conductors, Hard, Medium-Hard, or Soft.

D. California Code of Regulations.

1. Title 24, Part 3 – California Electrical Code (NEC), Article 250 (Grounding).

E. Underwriters Laboratories (UL).

1. UL 467 – UL Standard for Grounding and Bonding Equipment.

2. UL 224 – UL Standard for Extruded Insulating Tubing.

F. Inter-National Electrical Testing Association (NETA).

1. ATS – Acceptance Testing Specifications for Electrical Power Distribution Equipment and Systems.

G. Where reference is made to one of the above standards, the revision in effect at the time of bid opening shall apply.

1.04 SUBMITTALS

A. Submittals shall be made in accordance with Articles 20.01 and 36.01. Submittals shall include shop drawings and product data, for the following:

A. Ground rods.

B. Exothermic welding methods and materials.

C. Mechanical and compression type grounding clamps including installation requirements and materials.

D. Grounding hubs and fittings.

B. Submit results of grounding and bonding resistance testing as specified in these Specifications.

C. Record drawings.

D. Submit as built drawings showing locations of buried ground rods, grounding connections, locations of embedded and buried grounding conductors, ground test stations, and locations of stub-ups and pigtails for future connections to the grounding system.

E. All drawings shall be dimensioned and include reference points, northing/easting coordinates, stationing, and other similar information necessary to locate buried and/or concealed grounding system infrastructure in the future.

PART 2 PRODUCTS

2.01 MATERIALS

A. Ground wire shall be as specified under Article 36.25.

B. Ground rods shall be 3/4-inches by 10-feet copper-clad steel and constructed in accordance with UL 467. The minimum copper thickness shall be 0.25 mm. Ground rods shall be Eritech (Erico), Harger, Copperweld, or equal.

C. Grounding conduit hubs shall be malleable iron type, and of the correct size for the conduit, as manufactured by Thomas & Betts Co., Catalog No. 3940 Series; similar by Burndy or O.Z. Gedney Co.; or equal.

D. Waterpipe ground clamps shall be cast-bronze saddle type, and of the correct size for the pipe, as manufactured by Thomas & Betts Co., Cat. No. 2; similar by Burndy, O.Z. Gedney Co.; or equal.

E. All buried grounding connections and connections to structural steel shall be made by the Cadweld process, or equal exothermic welding system.

A. Molds, cartridge materials and accessories shall be as recommended by the manufacturer of the molds for the items to be welded. Molds and powder shall be furnished by the same manufacturer.

B. Molds used for welding shall be new. The number of welds made per mold shall not exceed manufacturer's recommendations.

PART 3 EXECUTION

3.01 INSTALLATION

A. Run grounding electrode conductors in rigid steel conduits. Bond the protecting conduits to the grounding electrode conductors at both ends. Do not allow water pipe connections to be painted. If the connections are painted, dis-assemble them and re-make them with new fittings.

B. Install equipment grounding conductors with all feeders and branch circuits.

C. Bond steel building columns in new structures together with grounding cable and connect to the distribution equipment ground bus, as shown on the Drawings.

D. Grounding cable connections to structural steel columns shall be made with exothermic welds.

E. Metal conduits stubbed into a motor control center shall be terminated with insulated grounding bushings and connected to the motor control center ground bus. Size the grounding cable in accordance with NEC Table 250-122, except that minimum size shall be No. 12 AWG.

F. Liquid-tight flexible metal conduit in sizes 1-1/2 inches and larger shall have bonding jumpers. Bonding jumpers shall be external, run parallel (not spiraled)

and fastened with plastic tie-wraps. Plastic tie-wraps shall be ultraviolet-resistant for outdoor applications.

G. Ground transformer neutrals to the nearest available grounding electrode with a conductor sized in accordance with NEC Article 250-66.

H. Install grounding electrodes at locations as shown on the Drawings.

I. All equipment enclosures, motor and transformer frames, conduit systems, cable armor, exposed structural steel and all other equipment and materials required by the NEC to be grounded, shall be grounded and bonded in accordance with NEC Article 250.

J. Seal exposed connections between different metals with No-Oxide Paint Grade A, or equal.

K. Lay all underground grounding conductors slack, and where exposed to mechanical injury protect with pipes or other substantial guards. If guards are magnetic material, electrically connect conductors to both ends of the guard.

L. The installation shall ensure good grounding continuity between the conduit system and equipment frames and enclosures. Where necessary, jumper wires shall be installed.

M. All grounding type receptacles shall be grounded to the outlet boxes with a No. 12 THW green conductor connected to the ground terminal of the receptacle and fastened to the outlet box by means of a grounding screw.

N. The shielded power cables shall be grounded at the termination points as shown on the Drawings.

O. Ground instrumentation cable shields at a single point inside of the control panel at the signal grounding bus bar unless grounding at the device specifically required by the instrument manufacturer. Grounding of instrumentation shields shall be as specified in these Specifications.

3.02 INSPECTION AND TESTING

A. Inspect the grounding and bonding system conductors and connections for tightness, proper installation, and proper application of electrical joint inhibitor compound.

B. Testing shall be performed before energizing the distribution system.

C. Resistance-to-ground testing shall be performed during dry season.

D. A separate test shall be conducted for each building or system.

E. Notify the Engineer immediately if the resistance to ground for any building or system is greater than five (5) ohms or if the resistance to ground for a substation is greater than one (1) ohm.

END OF ARTICLE

This page intentionally left blank.

PACHECO CONDUIT INSPECTION AND REHABILITATION PROJECT ADDENDUM NO.1

ATTACHMENT H

SPECIFICATIONS ARTICLE 36.19 – CONDUITS, BOXES, AND FITTINGS

Project No. 91214001 & 95084002
Contract No. C0629

This page intentionally left blank.

PART 1 GENERAL

1.01 SUMMARY

A. Article Includes:

1. Complete raceway systems as shown on the Drawings and as specified in these Specifications.

2. Raceway identification.

B. Related Articles:

1. Article 36.01, General Electrical Requirements.

2. Article 36.06, Grounding Systems.

1.02 SYSTEM DESCRIPTION

A. Conduits indicated to be run “exposed” on the schedules shall be run near the ceilings or along the walls of the areas through which they pass and shall be routed to avoid conflicts with HVAC ducts, cranes and hoists, lighting fixtures, doors and hatches, etc.

B. Conduits indicated to be run concealed shall be run in the center of concrete floor slabs, in partitions, or above hung ceilings, as required.

1.03 SUBMITTALS

A. Submittals shall be in accordance with Articles 20.01 and 36.01 and shall include:

1. The manufacturers’ names, product designation, catalog numbers, and catalog cut sheets of all materials specified.

2. All conduit racks suspended from ceilings shall be submitted detailing the materials and installation required to comply with seismic requirements of Article 13.05.01.

PART 2 PRODUCTS

2.01 MATERIALS

A. Rigid Steel Conduit

1. Rigid steel conduit interior and exterior shall be hot-dipped galvanized and shall be as manufactured by the Allied Tube and Conduit Corp., Wheatland Tube Co., or equal.

B. PVC Coated Rigid Steel Conduit

1. PVC coated rigid steel conduit shall have a minimum 0.040 inches thick, polyvinyl chloride coating permanently bonded to hot-dipped galvanized steel conduit and an internal chemically-cured urethane or enamel coating. The ends of all couplings, fittings, etc, shall have a minimum of one pipe diameter in length of PVC overlap. PVC coated rigid steel conduit and fittings shall be manufactured by Occidental Coating Company, “Plasti-Bond Red” as manufactured by Robroy Industries, or equal.

C. Electrical Metallic Tubing

1. Electrical metallic tubing shall be hot-dipped galvanized steel as manufactured by the Allied Tube and Conduit Corp., Triangle PWC Inc., Wheatland Tube Co., Bridgeport, or equal.

D. Rigid Non-metallic Conduit

1. Non-metallic conduit shall be rigid polyvinyl chloride (PVC) schedule 40 as manufactured by Carlon; Kraloy Products Co., Inc.; Highland Plastics Inc.; or equal.

E. Liquidtight Flexible Metal Conduit, Couplings and Fittings

1. Liquidtight flexible metal conduit shall be Sealtite, Type UA, manufactured by the Anaconda Metal Hose Div.; Anaconda American Brass Co.; American Flexible Conduit Co., Inc.; Universal Metal Hose Co.; or equal.

2. Fittings used with liquidtight flexible metal conduit shall be of the screw-in type as manufactured by the Thomas & Betts Co., Crouse-Hinds Co., or equal.

F. Flexible Metallic Tubing

1. Flexible metallic tubing shall be for use under the provisions of NEC Article 348.

2. Flexible metallic tubing shall be hot-dipped galvanized steel strips shaped into interlocking convolutions firmly joined to one another assuring a complete lock similar to Tristeel as manufactured by Triangle, PWC, Inc., or equal.

3. Flexible metallic tubing shall be used only indoors for connection to lighting fixtures in NEMA 1 administration and office areas.

4. Furnish and install insulated bushings at terminations for conductor protection.

G. Flexible Couplings

1. Flexible couplings shall be type ECGJH as manufactured by the Crouse-Hinds Co., Appleton Electric Co., Killark Electric Manufacturing Co., or equal.

H. Boxes and Fittings

1. Pressed steel switch and outlet boxes shall be hot-dipped galvanized as manufactured by the Raco Manufacturing Co., Adalet Co., O.Z. Manufacturing Co., or equal.

2. NEMA 1 and NEMA 12 area boxes:

   a. Terminal boxes, junction boxes, pull boxes, etc, shall be sheet steel unless otherwise shown on the Drawings.

   b. Boxes shall be galvanized and have continuously welded seams. Welds shall be ground smooth and galvanized.

   c. Box bodies shall be flanged and shall not have holes or knockouts. Box bodies shall not be less than 14 gauge metal and covers shall not be less than 12 gauge metal.

   d. Covers shall be gasketed and fastened with stainless steel screws.

   e. Terminal boxes shall be furnished with hinged doors, terminal mounting straps and brackets. Terminal blocks shall be NEMA type, not less than 20 amps, and 600 volts.

   f. Boxes shall be as manufactured by Hoffman Engineering Co.; Lee Products Co.; Keystone/Rees, Inc.; or equal.

3. NEMA 4 area boxes:

   a. Terminal boxes, junction boxes, pull boxes, etc, shall be sheet stainless steel unless otherwise shown on the Drawings.

   b. Boxes shall have continuously welded seams and mounting feet. Welds shall be ground smooth.

   c. Boxes shall be flanged and shall not have holes or knockouts. Box bodies shall not be less than 14 gauge metal and covers shall not be less than 12 gauge metal.

   d. Covers shall be gasketed and fastened with stainless steel clamps.

e. Terminal boxes shall be furnished with hinged doors, terminal mounting straps and brackets. Terminal blocks shall be NEMA type, not less than 20 amps, and 600 volts.

f. Boxes shall be as manufactured by Hoffman Engineering Co.; Lee Products Co.; Keystone/Rees, Inc.; or equal.

4. NEMA 4X area boxes:

   a. Terminal boxes, junction boxes and pull boxes shall be fiberglass reinforced plastic with stainless steel hardware and gasketed covers.

   b. Terminal boxes shall be furnished with hinged doors, terminal mounting straps and brackets. Terminal blocks shall be NEMA type, not less than 20 amps, and 600 volts.

   c. Boxes shall be as manufactured by Hoffman Engineering Co.; Lee Products Co.; Keystone / Rees, Inc.; or equal.

5. Explosion-proof boxes shall be designed for Class 1, Group D, Division 1 hazardous locations. They shall be cast iron with cadmium-zinc or hot-dipped galvanized finish, stainless steel or hot-dipped galvanized bolts; Type EJB as manufactured by the Crouse-Hinds Company, Appleton Electric Co., The Pyle-National Co., or equal.

6. All metal boxes and fittings used with PVC coated conduit shall be furnished with a PVC coating bonded to the metal, the same thickness as used on the coated steel conduit. The ends of couplings and fittings shall have a minimum of one pipe diameter PVC overlap to cover threads and provide a seal.

7. Cast or malleable iron device boxes shall be Type FD. All cast or malleable iron boxes and fittings shall have cadmium-zinc finish with cast covers and stainless steel screws as manufactured by the Crouse-Hinds Co., or equal.

8. Steel elbows and couplings shall be hot-dipped galvanized. Elbows and couplings used with PVC-coated conduit shall be furnished with a PVC coating bonded to the steel, the same thickness as used on the coated steel conduit.

9. Electrical metallic tubing fittings shall be of the raintight, concrete-tight, compression type as manufactured by the Appleton Electric Co., Crouse-Hinds Co., or equal.

10. Conduit hubs shall be as manufactured by Myers Electric Products, Inc., or equal.

11. Conduit wall seals for new concrete walls below grade shall be O.Z./Gedney Co., Type WSK; Spring City Electrical Manufacturing Co., Type WDP; or equal.

12. Conduit wall seals for cored holes shall be Type CSML as manufactured by the O.Z./Gedney Co., or equal.

13. Conduit wall and floor seals for sleeved openings shall be Type CSMI as manufactured by the O.Z./Gedney Co., or equal.

14. Combination expansion-deflection fittings embedded in concrete shall be Type XD as manufactured by the Crouse-Hinds Co.; O.Z./Gedney Co.; Spring City Electrical Mfg. Co.; or equal.

15. Combination expansion-deflection fittings installed exposed shall be Type XJ as manufactured by Crouse-Hinds Co.; O.Z. Gedney Co.; Spring City Electrical Mfg. Co.; or equal.

16. Explosion-proof fittings shall be as manufactured by the Crouse-Hinds Co.; Appleton Electric Co.; O.Z./Gedney Co.; or equal.

17. Conduit sealing bushings shall be O.Z./Gedney, Type CSB; or equal.

I. Conduit Mounting Equipment

1. In dry indoor areas, hangers, rods, backplates, beam clamps, channel, etc, shall be galvanized iron or galvanized steel.

2. PVC-coated steel channel or Fiberglass channel with stainless steel hardware shall be used in areas designated NEMA 4 or 4X on the Drawings or which are wet or corrosive. Fiberglass channel shall be resistant to the chemicals present in the area in which it is used.

3. Conduit mounted on ceilings shall have supports designed in accordance with the requirements of Article 31.02, Pipe Hangers and Supports.

J. Conduit Identification Tags

1. Exposed conduit shall be tagged with numbers, pressure stamped into a non-corrosive, two inches long, one-half inch wide, stainless steel tape; Dymo marking system, or equal.

2. A tag with number shall be fixed with No. 18 AWG or larger Type 304 stainless steel wire to each conduit segment, at the end of each conduit and within three (3) feet of each pull box, panelboard and switchboard.

K. Wall and Floor Slab Opening Seals

1. Wall and floor slab openings shall be sealed with a UL classified, FM approved fire barrier as manufactured by 3M Electrical Products Division; Specified Technologies, Inc.; the Thomas & Betts Corp.; or equal.

L. Cold Galvanizing Compound

1. Cold galvanizing compound shall be as manufactured by ZRC Products Company, a Division of Norfolk Corp.; or equal.

M. Gas Containment Area Sealing

1. To seal conduits from the passage of noxious gases, a synthetic elastomer type caulking material shall be provided at locations as noted on the Drawings and installed in accordance with the manufacturer's instructions. The caulking shall be 3M Series CP25, or equal.

N. Chemical Containment Area Sealing

1. To seal conduits from the passage of liquid chemicals, a polyurethane elastomeric caulking material shall be provided at the locations as noted on the Drawings and installed in accordance with the manufacturer's instructions. The material shall be SikaFlex-2C used with primer No. 449 or No. 260 as appropriate for the conduit.

PART 3 EXECUTION

3.01 RACEWAY APPLICATIONS

A. Except where otherwise shown on the Drawings, or specified, all wiring shall be in rigid steel conduit.

B. PVC coated rigid steel conduit shall be used where shown on the Drawings and in areas designated NEMA 4X on the Drawings.

C. PVC conduit shall be used for all conduit embedded in concrete walls, floors, and ceilings.

D. Electrical Metallic Tubing (EMT) may be installed concealed above suspended ceilings or within partitions in clean, dry environments such as administrative areas, lunch rooms, conference rooms, etc. EMT shall not be embedded in concrete or installed outdoors, in process areas, shops, etc.

3.02 BOX APPLICATIONS

A. Unless otherwise specified in these Specifications or shown on the Drawings, all boxes shall be metal.

B. Switch, receptacle and lighting outlet boxes and condulet fittings utilized in NEMA 3R, 4, 4X, and 12 areas shall be cast iron or malleable iron.

C. Switch, receptacle and lighting outlet boxes utilized in NEMA 1 areas and installed concealed shall be pressed steel.

D. Switch, receptacle, and lighting outlet boxes utilized in NEMA 1 areas and installed exposed shall be cast iron or malleable iron.

E. Terminal boxes, junction boxes, and pull boxes shall have NEMA ratings suitable for the location in which they are installed.

3.03 FITTINGS APPLICATIONS

A. Combination expansion-deflection fittings shall be used where conduits cross structure expansion joints. Refer to Drawings for expansion joint locations. Provide bonding jumpers around fittings.

B. Conduit wall seals shall be used where underground conduits penetrate walls or at other locations shown on the Drawings.

C. Conduit sealing bushings shall be used to seal conduit ends exposed to the weather and at other locations shown on the Drawings.

3.04 INSTALLATION

A. Conduit smaller than ¾ inches electrical trade size shall not be used, nor shall there be more than the equivalent of three 90 degree bends in any one run. Pull boxes shall be provided as required or directed.

B. No wire shall be pulled until the conduit system is complete in all details; in the case of concealed work, until all rough plastering or masonry has been completed; in the case of exposed work, until the conduit system has been completed in every detail.

C. The ends of all conduits shall be tightly plugged to exclude dust and moisture during construction.

D. Conduit supports, other than for underground raceways, shall be spaced at intervals of eight feet or less, as required to obtain rigid construction.

E. Single conduits shall be supported by means of one-hole pipe clamps in combination with one-screw back plates, to raise conduits from the surface. Multiple runs of conduits shall be supported on trapeze type hangers with steel horizontal members and threaded hanger rods. The rods shall be not less than 3/8 inches diameter. Surface mounted panel boxes, junction boxes, conduit, etc, shall be supported by spacers to provide a minimum of one-half inches clearance between wall and equipment.

F. Conduit hangers shall be attached to structural steel by means of beam or channel clamps. Where attached to concrete surfaces, concrete inserts of the spot type shall be provided.

G. All conduits on exposed work, within partitions and above suspended ceilings, shall be run at right angles to and parallel with the surrounding wall and shall conform to the form of the ceiling. No diagonal runs will be allowed. Bends in parallel conduit runs shall be concentric. All conduit shall be run perfectly straight and true.

H. Conduit terminating in pressed steel boxes shall have double-locknuts and insulated bushings.

I. Conduit terminating in NEMA 3R, 4, 4X and 12 enclosures shall be terminated with Myers-type conduit hubs.

J. Conduits containing equipment grounding conductors and terminating in sheet steel boxes shall have insulated throat grounding bushings.

K. Conduits shall be installed using threaded fittings.

L. Liquidtight flexible metal conduit shall be used for all motor terminations, the primary and secondary of transformers, generator terminations and other equipment where vibration is present. The maximum length of liquidtight flexible conduit shall be limited to three (3) feet at each termination.

M. Where conduits pass through openings in fire-rated walls or floor slabs, the openings shall be sealed with sealing systems of equal fire rating to the wall, ceiling, or floor. Refer to Architectural Drawings for fire ratings.

N. PVC conduit to non-metallic box connections shall be made with PVC socket-to-male thread terminal adapters with neoprene O-ring and PVC round edge bushings.

O. Open-ended conduits containing SO cable, or similar cable that continues outside the conduit to the utilization equipment, shall be sealed with suitably-sized conduit sealing bushings.

P. PVC conduit shall be supported with non-metallic clamps or PVC-coated steel or non-metallic racks and stainless steel hardware.

Q. PVC boxes, conduit fittings, etc, with integral hubs shall be solvent-welded directly to the PVC conduit system.

R. Non-metallic boxes with field-drilled or punched holes shall be connected to the PVC conduit system with threaded and gasketed PVC Terminal Adapters.

S. Expansion fittings shall be used on exposed runs of PVC conduit where required for thermal expansion. Installation and number of fittings shall be as recommended by the conduit manufacturer.

T. All conduit entering or leaving a motor control center, switchboard or other multiple compartment enclosure shall be stubbed up into the bottom horizontal wireway, or other manufacturer-designated area, directly below the vertical section in which the conductors are to be terminated.

U. Conduit sealing and drain fittings shall be installed in areas designated as NEMA 7.

V. A conduit identification plate shall be installed on all power, instrumentation, alarm and control conduits at each end of the run and at intermediate junction

boxes, manholes, etc. Conduit plates shall be installed before conductors are pulled into conduits. Exact identification plate location shall be coordinated with the Engineer at the time of installation to provide uniformity of placement and ease of reading. Conduit numbers shall be exactly as shown on the Drawings.

W. Conduits noted as spare shall be capped or plugged at both ends with easily removable fittings.

X. Mandrels shall be pulled through all existing conduits which will be reused and through all new conduits which are two (2) inches diameter and larger prior to installing conductors.

Y. 3/16-in polypropylene pull lines shall be installed in all new conduits noted as spares or designated for future equipment.

Z. All conduit which may under any circumstance contain liquids such as water, condensation, liquid chemicals, etc, shall be arranged to drain away from the equipment served. If conduit drainage is not possible, conduit seals shall be used to plug the conduits.

AA. Flexible metallic conduit shall be used for recessed fluorescent fixtures in hung ceilings to connect fixtures to the conduit system.

BB. Where no type or size is indicated for junction boxes, pull boxes or terminal cabinets, they shall be sized in accordance with the requirements of NEC Article 314.

CC. Miscellaneous steel for the support of fixtures, boxes, transformers, starters, contactors, panels and conduit shall be furnished and installed.

DD. Steel channels, flat iron and channel iron shall be furnished and installed for the support of all electrical equipment and devices, where required, including all anchors, inserts, bolts, nuts, washers, etc, for a rigid installation.

EE. Conduits shall not cross pipe shafts, access hatches or vent duct openings. They shall be routed to avoid such present or future openings in floor or ceiling construction.

FF. The use of running threads is prohibited and a three-piece union shall be used in lieu of running threads.

GG. Conduits passing from heated to unheated spaces, exterior spaces, refrigerated spaces, cold air plenums, etc, shall be sealed with “Duxseal” as manufactured by Manville, or by using a seal fitting, to prevent the accumulation of condensation.

HH. Conduits shall be located a minimum of three (3) inches from steam or hot water piping. Where crossings are unavoidable, the conduit shall be kept at least one (1) inch from the covering of the pipe crossed.

II. Conduits terminating at a cable tray or busduct shall be supported independently from the busduct or cable tray. Provide a conduit support within one (1) foot of

the cable tray or busduct. The weight of the conduit shall not bear on the cable tray or busduct.

JJ. Provide sway braces for cable trays and bus ducts. Sway braces shall be U-channel supports installed at a 45 degree angle from the tray or busduct and anchored to the concrete ceiling structure or structural support system. Braces shall be provided on twenty-feet spacing centers. Alternate the direction of the bracing supports.

KK. Rigid galvanized steel conduits buried in earth shall not be utilized.

LL. Rigid galvanized steel conduits which have been field-cut and threaded shall be painted with cold galvanizing compounds.

MM. PVC-coated galvanized rigid steel conduit shall be used for elbows and risers at the utility pole for electrical and telephone service conduits.

NN. PVC-coated galvanized rigid steel elbows shall be used for pad-mounted transformer stub-ups.

3.05 RACEWAY IDENTIFICATION

A. Individual raceways shall be identified by the designation “X-ORIG/DEST” as follows:

For grounding	**X = G**
For power	X = P
For control (DO), status (DI), and alarm (DI)	X = C
For combined power and control	X = P/C
For signal (AI/AO)	X = S
For network data cables	X = N
For voice cables	X = V

ORIG = the enclosure at the raceway system origination.
DEST = the raceway destination item of equipment, control panel, etc.

Example raceway identification: P-MCC-5/ROHPCP

END OF ARTICLE

PACHECO CONDUIT INSPECTION AND REHABILITATION PROJECT ADDENDUM NO.1

ATTACHMENT I

SPECIFICATIONS ARTICLE 36.25 – WIRES AND CABLES, 600 VOLTS AND BELOW

Project No. 91214001 & 95084002
Contract No. C0629

This page intentionally left blank.

PART 1 GENERAL

1.01 SUMMARY

A. Article Includes:

1. All wire, cable and appurtenances as shown on the Drawings and as specified in these Specifications.

2. Wire and cable identification.

B. Related Articles:

1. Article 36.01, General Electrical Requirements.

2. Article 37.01, General Instrumentation and Control Systems Requirements.

1.02 SUBMITTALS

A. Submittals shall be in accordance with Articles 20.01 and 36.01. Submittals shall include:

1. Samples of each type of proposed wire and manufacturer's product data cut sheets. Each sample shall have the size, type of insulation and voltage stenciled on the jacket. Approved samples will be sent to the project location for comparison by the Engineer with the wire actually installed.

2. Motor terminations.

3. Splices and terminations for instrumentation conductors.

4. Wire and cable markers.

5. Field test results.

1.03 DELIVERY, STORAGE AND HANDLING

A. Carefully handle all conductors to avoid kinks and damage to insulation. Store in protected areas.

PART 2 PRODUCTS

2.01 GENERAL

A. Wires and cables shall be of annealed, 98 percent conductivity, soft drawn copper.

B. All conductors shall be stranded, except that lighting and receptacle wiring shall be solid.

C. Except for control, signal and instrumentation circuits, wire smaller than No. 12 AWG shall not be used.

2.02 BUILDING WIRE

A. Wire for lighting, receptacles and other circuits not exceeding 150 Volts to ground shall be NEC type THHN/THWN as manufactured by the Okonite Co.; Carol Cable Co., Inc.; Pirelli Cable Corp.; or equal.

B. Wire for circuits over 150 Volts to ground shall be NEC type XHHW-2 as manufactured by the Okonite Co.; Carol Cable Co. Inc.; Pirelli Cable Corp. or equal. The use of NEC type THHN/THWN is not acceptable on this project for circuits exceeding 150 volts to ground.

C. Multi-conductor control and power cables shall have stranded conductors with type THHN/THWN insulated, nylon conductor covering, and an overall PVC jacket covering over the individual wires. Cable shall be TC rated and conform to UL 1277 and IEEE 383 Standards. Cable shall be flame resistant, nonpropagating and suitable for installation in a Class I, Division II hazardous location and for direct burial in earth. Power and control cables shall be furnished with a green ground conductor. Power cables shall be furnished with a white neutral conductor where required to serve phase-to-neutral loads.

Multi-conductor control and power cables shall be as manufactured by the Okonite Co., Southwire Co., General Cable Co., or equal.

2.03 CONTROL, STATUS AND ALARM WIRE

A. Control, status, and alarm wires installed between field devices and field terminals inside the I/O cabinet shall be No.14 AWG, Type THHN/THWN, stranded, as manufactured by the Okonite Co.; Carol Cable Co. Inc.; Pirelli Cable Corp.; or equal.

B. Control, status, and alarm wires installed between field terminals inside the I/O cabinet and I/O cards shall be No.18 AWG, Type TFN, stranded, as manufactured by the Okonite Co.; Carol Cable Co., Inc.; Pirelli Cable Corp.; or equal.

C. Multi-conductor control cable, where shown on the Drawings, shall be stranded, No. 14 AWG, 600 volts, polyvinyl chloride insulated, nylon jacket over insulation, polyvinyl chloride jacket overall, Type TC as manufactured by the Okonite Co., Pirelli Cable Corp., or equal.

2.04 INSTRUMENTATION WIRE

A. Wire for process instrumentation signals (i.e. 1-5 VDC, 4-20 mADC), R.T.D., potentiometer, and similar signals shall be:

1. Single-pair cable:

    a. Conductors: Two No. 16 AWG stranded and twisted on two-inch lay

    b. Insulation: PVC with 600 volts, 105 degree C rating

    c. Shield: 100 percent Mylar tape with drain wire

    d. Jacket: PVC with UL Subject 13, UL 1581 and manufacturers identification

    e. Maximum overall diameter: 0.262 inches

    f. Misc: UL Subject 13, Type PLTC

    g. Manufacturers: Okonite, N type P-0S, Model No. 264-60-4401; or equal.

2. Three-conductor (triad) cable:

    a. Conductors: Three No. 16 AWG, stranded, and twisted on two inches lay

    b. Insulation: PVC with 600 volts, 105 degree C rating

    c. Shield: 100 percent Mylar tape with drain wire

    d. Jacket: PVC with UL Subject 13, UL 1581 and manufacturers identification

    e. Max overall diameter: 0.276 inches

    f. Misc: UL Subject 13, Type PLTC

    g. Manufacturers: Okonite, N Type P-OS, No. 264-65-4401; or equal.

B. Wire for the power monitoring data highway shall be:

1. Two-pair cable:

    a. Conductors: Two No. 22 AWG, tinned-copper, stranded and twisted.

    b. Insulation: PVC with 300 volts, 105 degree C rating.

    c. Shielding: Individual shielded pairs.

    d. Jacket: PVC, UL1581.

    e. Maximum overall diameter: 0.165 inches.

f. Manufacturers: Belden 8723; Okonite, N type SP-OS; or equal.

2. Suitable for use on an RS-485, four-wire system.

3.

2.05 SPLICES (POWER CONDUCTORS)

A. Compression type connectors shall be insulated with a heat-shrink boot or outer covering and epoxy filling.

Splice kits shall be as manufactured by Raychem, Ideal Industries, 3M Co., or equal.

B. Solderless pressure connectors shall be self-contained, waterproof and corrosion-proof units incorporating prefilled silicone grease to block out moisture and air. Connectors shall be sized according to manufacturer's recommendations.

The connectors shall be UL listed and CSA approved, as manufactured by King Technology, St Louis, MO; Ideal Industries, Inc., Sycamore, IL; or equal.

2.06 MOTOR CONNECTIONS

A. Motor connections shall be ring-type mechanical compression terminations installed on the branch circuit wires and the motor leads and secured with bolt, nut and springwasher. Connections shall be insulated with a Raychem Type RVC, roll-on stub insulator; or equal.

2.07 TERMINATION AND SPLICES FOR CONTROL, STATUS, & ALARM CONDUCTORS

A. Terminations shall be of the solderless, nylon insulated, locking fork-end (upturned leg ends) or eyelet type.

B. Splices (connectors) shall be of the solderless, nylon insulated parallel or pigtail type.

C. Terminations and connectors shall be as manufactured by Thomas & Betts, Ideal Industries; 3M Co.; Panduit Corp.; or equal.

D. Solderless pressure connectors utilized below grade shall be self-contained, waterproof and corrosion-proof units incorporating prefilled silicone grease to block out moisture and air.

The connectors shall be UL listed and CSA approved, as manufactured by King Technology, St Louis, MO; Ideal Industries, Inc., Sycamore, IL; or equal.

2.08 TERMINATIONS FOR INSTRUMENTATION CABLES

A. Termination connectors shall be of the insulated locking fork-end (upturned leg ends) or eyelet type.

B. Terminations shall utilize nylon insulation.

C. Terminations shall be as manufactured by Thomas & Betts, Ideal Industries; 3M Co.; Panduit Corp.; or equal.

2.09 WIRE AND CABLE MARKERS

A. Wire and cable markers shall be “Omni-Grip” as manufactured by the W.H. Brady Co., Thomas & Betts Co., 3M Co., or equal.

B. Wire and cables with diameters exceeding the capacity of the “Omni-Grip” shall be marked with pre-printed, self-adhesive vinyl tapes as manufactured by the W.H. Brady Co., Panduit Corp., or equal.

C. Printed using Brady marker “XC PLUS,” or equal.

D. Markers used in tunnels or other wet locations shall be on heat-shrinkable marking sleeves.

E. Use self-laminating vinyl on white background for markers within electrical equipment such as panels, termination cabinets, motor control centers.

PART 3 EXECUTION

3.01 INSTALLATION

A. Uniquely identify all wires, cables and each conductor of multi-conductor cables at each end with wire and cable markers.

B. Use lubrications to facilitate wire pulling. Lubricants shall be UL approved for use with the insulation specified.

3.02 CIRCUIT IDENTIFICATION

A. Color Coding General

1. All wire shall be color-coded or coded using electrical tape in sizes where colored insulation is not available. Where tape is used as the identification system, it shall be applied in all junction boxes, manholes and other accessible intermediate locations as well as at each termination.

B. Color Coding Table

System	Wire	Color
240/120 Volts	Neutral	White
Single-phase, three-wire	Line 1	Black
	Line 2	Red
208Y/120 Volts	Neutral	White
Three-phase, four-wire	Phase A	Black

System	Wire	Color
	Phase B	Red
	Phase C	Blue
480Y/277 Volts	Neutral	White
Three-phase, four-wire	Phase A	Brown
	Phase B	Orange
	Phase C	Yellow

Equipment Grounding Cables	**Green**
General Purpose AC Control Cables	Red
Discrete AC Cables at I/O Cards	Brown
General Purpose DC Control Cables	Blue
Discrete DC Cables at I/O Cards	Violet
Instrumentation Cables	Black/White
Externally-Fed Control Cables (Interlocks)	Yellow

1. Use control cable or instrumentation cable for alarm annunciator field wiring as shown on the Drawings and specified. Use color coding and phasing consistent throughout the site. Bus bars at panelboards and motor control centers to be connected Phase A-B-C, top-to-bottom, or left- to-right facing connecting lugs.

2. Conductors No. 2 AWG and smaller shall be factory color-coded with a separate color for each phase and neutral. Larger cables shall be coded by the use of colored tape.

3. In addition to color coding, for all single-phase and three-phase systems, identify each cable (single or multi-conductor) and conductor at each end, in each manhole, pull box, cable tray, or other component of the raceway system. This identification is applicable to all power, control, alarm, signal, and instrumentation cables, and conductors.

4. Identify each cable (single or multi-conductor) and groups or bundles of individual single conductors in each manhole, pull box, or other component of the raceway system with circuit identification markers. Implement a “from-to” cable/conductor bundle tagging system as part of this identification effort.

5. Identify each individual conductor at each termination. This includes such locations as switchgear, switchboards, motor control centers, adjustable speed drives, control panels, junction/terminal boxes, all field devices, and all other locations where conductors are terminated. Identify the termination of these conductors in accordance with the accepted shop drawings. Tag conductors with sleeve-type labels.

6. Where more than one nominal voltage system exists, identify each ungrounded system conductor by phase and system. Permanently attach means of identification at each branch-circuit panelboard, switchboard, switchgear, motor control center, or other type of power distribution equipment.

C. Power Conductors

1. Include the following information for power wire and cable identification:

   - Circuit Number
   - Origin
   - Destination

2. Circuit number shall be as indicated on one-line diagrams for circuits fed from switchgear, switchboards, and motor control centers and as shown on panelboard schedules for circuits fed from lighting or distribution panelboards.

3. Origin is included in the circuit number.

4. Destination shall be the load tag name for an individual item of equipment, panelboard, or control panel as shown on the Drawings.

5. Example identification: ROHPCP401/ROHP01

D. Instrumentation and Control Conductors

1. Use the following information for instrumentation and control conductor identification:

   Process area codes:

   CS Caustic Soda

   Function designation and loop numbers:

   For circuits between field source and control panel, use the equipment tag name.

   For circuits between control panel and I/O drop, use point number in Appendix I.

   Example identification: For the Caustic Soda Pump No. 2 RUN status DI circuit, the two wires between ROHPCP and I/O Drop 18 should be labeled:

   “CS-MN902-1”
   “CS-MN902-2”

E. Drawings

1. Contractor shall prepare and submit shop drawings for electrical equipment room layouts, drawn at a minimum scale of 3/8 inch = 1 foot. Wiring plans shall be drawn at a minimum scale of ¼ inch = 1 foot.

2. Wiring diagrams shall carry a uniform and coordinated set of wire numbers and terminal block numbers to permit cross-referencing between the contract document drawings, the drawings prepared by the Contractor, and equipment O&M Manual Drawings.

3. Drawing number cross-references and continuation references shall also be provided. Contractor-prepared drawings shall reference applicable Contractor drawings such as P&IDs, control and logic diagrams, interface wiring diagrams, panel drawings, etc. Contractor-prepared drawings shall also reference applicable drawings provided by equipment manufacturers. Continuation and cross references denoted as “By Others” or similar non-specific wording are unacceptable.

4. On any drawing prepared for this project, if a wire, circuit, enclosure, panel, or device is continued on another drawing, the continuation drawing shall be referenced (and vice-versa). Wherever wires are shown connected to terminals, the drawings which show the continuation of the circuits on those terminals must be referenced.

5. Equipment interconnection diagrams shall be produced with the latest version of AutoCAD software, printed on 11 inches by 17inches size paper, and submitted on both electronic CD-ROM media and paper drawings. Submit complete interconnection diagrams no later than 70 days prior to any cable installation into raceways. Contractor shall note that the equipment interconnection diagram submittal will not be partially approved (“Approved as Noted”). Cables shall not be installed into raceways until the wiring interconnection diagrams are reviewed by the design engineer and returned marked as “No Exceptions Noted.”

3.03 TERMINATIONS AND SPLICES

A. Power conductors:

1. Terminations shall be die-compression type.

2. Splices (where allowed) shall be die-type compression connector and waterproof with heat-shrink boot or epoxy filling for copper conductors No. 4 AWG and larger.

3. Splices shall be solderless pressure connectors with insulating covers for copper conductors No. 6 AWG and smaller.

B. Control Conductors:

1. Termination on saddle-type terminals shall be wired directly with a maximum of two conductors.

2. Termination on screw type terminals shall be made with a maximum of two locking fork or eyelet connectors.

3. Splices, where allowed, shall be made with insulated compression type connectors.

C. Instrumentation Signal Conductors including for graphic panel, alarm, low- and high-level signals:

1. Terminations same as for control conductors.

2. Splices allowed at instrumentation terminal boxes only.

D. Except where permitted by the Engineer no splices will be allowed in manholes, handholes or other below grade located boxes.

E. Splices shall not be made in push-button control stations, control devices (i.e., pressure switches, flow switches, etc), conduit bodies, panelboards, etc.

3.04 INSTRUMENTATION CABLES

A. Instrumentation cables shall be installed in raceways as specified or as shown on the Drawings. All circuits shall be installed as twisted pairs or triads. In no case shall a circuit be made up using conductors from different pairs or triads. Triads shall be used wherever three wire circuits are required.

B. Terminal blocks shall be provided at all instrument cable junctions, and all circuits shall be identified at such junctions.

C. Shielded instrumentation wire, coaxial, data highway, I/O and fiberoptic cables shall be run without splices between instruments, terminal boxes, or panels.

D. Shields shall be grounded as recommended by the instrument manufacturer and isolated at all other locations. Terminal blocks shall be provided for inter-connecting shield drain wires at all junction boxes. Where individual circuit shielding is required, each shield circuit shall be provided with its own block.

3.05 FIELD TESTING

A. Test all 600 volt power wire insulation with a megohm meter after installation. Make tests at not less than 500 volts DC. Submit a written test report of the results to the Engineer.

END OF ARTICLE

This page intentionally left blank.

PACHECO CONDUIT INSPECTION AND REHABILITATION PROJECT ADDENDUM NO.1

ATTACHMENT J

SPECIFICATIONS ARTICLE 36.34 – WIRING DEVICES

Project No. 91214001 & 95084002
Contract No. C0629

This page intentionally left blank.

PART 1 GENERAL

1.01 SUMMARY

A. Article Includes:

1. All labor, materials, and equipment to install wiring devices as shown on the Drawings and as specified in these Specifications.

2. Provide all interconnecting conduit and branch circuit wiring for receptacle circuits in accordance with the NEC.

B. Related Articles:

1. Article 36.01. General Electrical Requirements

1.02 REFERENCES

A. Wiring devices shall comply with the requirements of the National Electric Code (NEC) and shall be Underwriters Laboratories (UL) labeled.

1.03 SUBMITTALS

A. Submittals shall be in accordance with in Articles 20.01 and 36.01 and shall include the manufacturers' names, product designation, catalog numbers, and catalog cutsheets for a material specified.

PART 2 PRODUCTS

2.01 MATERIALS

A. Wall switches shall be heavy-duty, specification-grade, toggle-action, flush-mounting quiet type, and brown in color in process areas. Color shall be as approved by the architect in architecturally finished areas. All switches shall conform to the latest revision of Federal Specification WS-896.

Wall switches shall be as follows:

1. Single-pole, 20 amps, 120/277 volts. Arrow-Hart, Catalog No. 1991; similar by Harvey Hubbell, Inc.; Pass & Seymour, Inc.; or equal.

2. Double-pole, 20 amps, 120/277 volts. Arrow-Hart, Catalog No. 1992; similar by Harvey Hubbell, Inc.; Pass & Seymour, Inc.; or equal.

3. Three-way, 20 amps, 120/277 volts. Arrow-Hart, Catalog No. 1993; similar by Harvey Hubbell, Inc.; Pass & Seymour, Inc.; or equal.

4. Four-way, 20 amps, 120/277 volts. Arrow-Hart, Catalog No. 1994; similar by Harvey Hubbell, Inc.; Pass & Seymour, Inc.; or equal.

5. Single-pole, 20 amps, 120/277 volts, key-operated. Arrow-Hart, Catalog No. 1991-L; similar by Harvey Hubbell, Inc.; Pass & Seymour, Inc.; or equal.

6. Single-pole, 20 amps, 120 volts, red pilot-lighted handle. Arrow-Hart, Catalog No. 1991PL; similar by Harvey Hubbell, Inc.; Pass & Seymour, Inc.; or equal.

7. Single-pole, 20 amps, 120 volts, clear-lighted handle. Arrow-Hart, Catalog No. 1991ILC; similar by Harvey Hubbell, Inc.; or equal.

8. Momentary-contact, three-position, two-circuit, center-off. Arrow-Hart, Catalog No. 1895; similar by Harvey Hubbell Inc.; Pass & Seymour, Inc.; or equal.

B. Receptacles shall be heavy-duty, specification-grade, brown color in process areas. Color shall be as approved by the architect in architecturally-finished areas.

Receptacles shall conform to Fed Spec WC596-F and shall be as follows:

1. Duplex, 20 amps, 125 volts, 2-pole, 3-wire. Arrow-Hart, Catalog No. 5362; similar by Harvey Hubbell, Inc.; Pass & Seymour, Inc.; or equal.

2. Weatherproof/corrosion-resistant single type, 20 amps, 125 volts, 2-pole, 3-wire, with cover. Crouse-Hinds Co., Catalog No. WLRS-5-20; similar by Appleton Electric; or equal.

3. Weatherproof/corrosion resistant duplex, 20 amps, 125 volts, 2-pole, 3-wire, with cover; Crouse-Hinds Co., Catalog No. WLRD-5-20; similar by Appleton Electric; or equal.

4. Ground-fault interrupter, duplex, 20 amps, 125 volts, 2-pole, 3-wire, GFCI feed-thru type with “test” and “reset” buttons. Arrow-Hart, Catalog No. GF5342; similar by Harvey Hubbell, Inc.; Pass & Seymour, Inc.; or equal.

5. Duplex, 20 amps, 125 volts, 2-pole, 3-wire, transient voltage surge suppressor and audio alarm or indicating light to indicate bad ground or failed MOV. Arrow-Hart, Catalog No. 5362S; similar by Harvey Hubbell, Inc.; Pass & Seymour, Inc.; or equal.

C. Device Plates

1. Plates for indoor flush mounted devices shall be of the required number of gangs for the application involved and shall be as follows:

a. In administration-type buildings:

Smooth, high impact nylon of the same manufacturer and color as the device. Final color to be as selected by the Architect.

b. Where permitted in other areas of the plant:

Flush-mounted devices in cement block construction shall be Type 302 high nickel (18-8) stainless steel of the same manufacturer as the devices.

2. Plates for indoor surface-mounted device boxes shall be cast metal of the same material as the box; Crouse-Hinds No. DS23G and DS32G, or equal.

3. Oversized plates shall be installed where standard plates do not fully cover the wall opening.

4. Device plates for switches mounted outdoors or indicated as weatherproof shall be gasketed, cast aluminum with provisions for padlocking switches “ON” and “OFF”; Crouse-Hinds No. DS185, or equal.

5. Multiple surface-mounted devices shall be ganged in a single, common box and provided with an adapter, if necessary, to allow mounting of single-gang device plates on multi-gang cast boxes.

6. Engraved device plates shall be provided where required.

7. Weatherproof, gasketed cover for GFI receptacle mounted in a FS/FD box shall be: Arrow-Hart, Catalog No. 4501-FS; similar by Harvey Hubbell, Inc.; Pass & Seymour, Inc.; or equal.

PART 3 EXECUTION

3.01 INSTALLATION

A. Switch and receptacle outlets shall be installed flush with the finished wall surfaces in areas with stud frame and gypsum board construction, in dry areas with cement block construction or when raceways are shown as concealed on the Drawings.

B. Do not install flush-mounted devices in areas designated NEMA 3R, 4, or 4X on the Drawings. Provide surface mounted devices in these areas.

C. Provide weatherproof device covers in areas designated NEMA 3R, 4, or 4X on the Drawings.

D. Convenience outlets shall be installed 18 inches above the floor unless otherwise required.

E. Convenience outlets installed outdoors and in rooms where equipment may be hosed down shall be 48 inches above floor or grade (unless otherwise shown or noted on the Drawings).

F. Switches shall be installed 48 inches above the finished floor unless otherwise shown or noted on the Drawings.

G. The location of all devices is shown, in general, on the Drawings, and may be varied within reasonable limits so as to avoid any piping or other obstruction without extra cost, subject to the approval of the Engineer. Coordinate the installation of the devices for piping and equipment clearance.

END OF ARTICLE

PACHECO CONDUIT INSPECTION AND REHABILITATION PROJECT ADDENDUM NO.1

ATTACHMENT K

SPECIFICATIONS ARTICLE 36.49 – PANELBOARDS

Project No. 91214001 & 95084002
Contract No. C0629

This page intentionally left blank.

PART 1 GENERAL

1.01 SUMMARY

A. Article includes:

1. All labor, materials, equipment and incidentals required and install all panelboards as shown on the Drawings and as specified in these Specifications.

2. All equipment identified on the Drawings as Lighting Panelboards or Distribution Panelboards shall conform to this specification unless noted otherwise on the Drawings.

B. Related Articles:

1. Article 36.01, General Electrical Requirements.

1.02 REFERENCES

A. Panelboards shall be in accordance with the Underwriter Laboratories (UL) “Standard for Panelboards” and “Standard for Cabinets and Boxes” and shall be so labeled where procedures exist. Panelboards shall also comply with NEMA Standard for Panelboards and the National Electrical Code (NEC).

B. Where reference is made to one of the above standards, the revision in effect at the time of bid opening shall apply.

1.03 SUBMITTALS

A. All submittals shall be in accordance with Articles 20.01 and 36.01. The submittals shall include the following:

1. Submit catalog cuts and descriptive literature for each type of panelboard and breaker provided.

2. Submit individual panelboard schedule for each panelboard provided under this Work.

3. Engineering calculations shall be furnished in accordance with Article 13.05.01, Seismic Design Criteria. As a minimum, these shall demonstrate that each of the panelboards will adequately transfer the design seismic forces to the anchor bolts and foundation.

PART 2 PRODUCTS

2.01 MANUFACTURERS

A. 120/240 volts, single-phase, 3-wire and 208/120 volts, 3-phase, 4-wire panelboards: Pow-R-Line 1a by Cutler-Hammer, equal product by General Electric or Square D, or equal.

B. 480 volts, 3-phase, 3-wire and 480Y/277 volts, 3-phase, 4-wire panelboards: Pow-R-Line 3a or 4b by Cutler-Hammer, equal product by General Electric or Square D, or equal.

2.02 GENERAL

A. Rating

1. Panelboard ratings shall be as shown on the Drawings.

2. Circuit breaker panelboards shall be fully-rated for the specified circuit breaker fault current interrupting capacity. Series connected short circuit ratings will not be acceptable.

3. Where required by the Drawings, panelboards shall be UL labeled as “suitable for use as service entry equipment”.

2.03 MATERIALS, NEMA 1

A. Interiors

1. All interiors shall be completely factory assembled with circuit breakers, wire connectors, etc. All wire connectors, except screw terminals, shall be of the anti-turn solderless type and all shall be suitable for copper or aluminum wire of the sizes indicated.

2. Interiors shall be so designed that circuit breakers can be replaced without disturbing adjacent units and without removing the main bus connectors and shall be so designed that circuits may be changed without machining, drilling or tapping.

3. Branch circuits shall be arranged using double-row construction except when narrow column panels are indicated. Branch circuits shall be numbered by the manufacturer.

4. A nameplate shall be provided listing manufacturer's name, panel type and rating.

B. Buses

1. Bus bars for the mains shall be of copper. Full-size neutral bars shall be included. Phase bussing shall be full height without reduction. Cross connectors shall be copper.

2. Neutral bussing shall have a suitable lug for each outgoing feeder requiring a neutral connection.

3. Spaces for future circuit breakers shall be bussed for the maximum device that can be fitted into them.

4. Equipment ground bars shall be furnished.

C. Boxes

1. Recessed or flush-mounted boxes shall be made from galvanized code gauge steel having multiple knockouts, unless otherwise noted. Boxes shall be of sufficient size to provide a minimum gutter space of four inches on all sides.

2. Surface-mounted boxes and trims shall have an internal and external finish as specified in Paragraph 2.04, D4 below. Surface-mounted boxes shall be field punched for conduit entrances.

3. At least four studs shall be furnished for mounting the panelboard interior.

D. Trim

1. Hinged doors covering all circuit breaker handles shall be included in all panel trims.

2. Doors shall have semi-flush type cylinder lock and catch, except that doors over 48 inches in height shall have a vault handle and three-point catch, complete with lock, arranged to fasten door at top, bottom and center. Door hinges shall be concealed. Furnish two keys for each lock. All locks shall be keyed alike. Directory frame and card having a transparent cover shall be furnished on each door.

3. The trims shall be fabricated from code gauge sheet steel.

4. All exterior and interior steel surfaces of the panelboard shall be properly cleaned and finished with ANSI Z55.1, No. 61 light gray paint over a rust-inhibiting phosphatized coating. The finish paint shall be of a type to which field applied paint will adhere.

5. Trims for flush panels shall overlap the box by at least ¾ inches all around. Surface trims shall have the same width and height as the box. Trims shall be fastened with quarter-turn clamps.

2.04 MATERIALS, NEMA 3, 4, 4X & 12

A. Interiors and Buses

1. Interiors and buses shall be as specified for NEMA 1 construction.

B. Boxes and Covers

1. Boxes and covers shall be made from stainless steel with natural finish.

2. Boxes and covers shall be bolted together and gasketed.

3. Exterior doors shall be provided with three-point latches and handle with padlocking provisions.

C. Freestanding Panelboards

1. Where indicated on the Drawings as being freestanding, panelboards shall be provided in a 90 inches high by 24 inches deep (minimum) by 24 inches wide (minimum) weatherproof exterior enclosure suitable for floor mounting.

2.05 CIRCUIT BREAKERS

A. Panelboards shall be equipped with circuit breakers with frame size and trip settings as shown on the Drawings.

B. Circuit breakers shall be molded-case, bolt-on type.

C. Each circuit breaker used in 120/240 volts and 208Y/120 volts panelboards shall have an interrupting capacity of not less than 10,000 amps, RMS symmetrical.

D. Each circuit breaker used in 480Y/277 volts and 480 volts panelboards shall have an interrupting capacity of not less than 65,000 amps, RMS symmetrical.

E. GFCI (ground fault circuit interrupter) shall be provided for circuits where shown on the Drawings. GFCI units shall be 1 Pole, 120 volts, molded-case, bolt-on breakers, incorporating a solid state ground fault interrupter circuit insulated and isolated from the breaker mechanism. The unit shall be UL listed Class A Group I device (5 milliamp sensitivity, 25 millisecond trip time) and an interrupting capacity of 10,000 amps, RMS.

F. Circuit breakers shall be as manufactured by the panelboard manufacturer.

G. Two- and three-pole circuit breakers shall be constructed as a single-unit and shall not require handle-ties.

2.06 ELECTRIC CIRCUIT MONITORS (ECM)

A. ECMs shall be factory installed in panelboards as indicated on the Drawings.

PART 3 EXECUTION

3.01 INSTALLATION

A. Mount boxes for surface-mounted panelboards to allow at least ½ inches air space between the box and the wall.

B. Connect panelboard branch circuit loads so that the load is distributed as equally as possible between the phase busses.

C. Type circuit directories giving location and nature of load served. Install circuit directories in each panelboard.

D. Install markers on the front cover of all panelboards which identify the voltage rating. Markers shall be made of self-sticking B-500 vinyl cloth printed with black characters on an Alert Orange background, 2-1/4 inches high by 9 inches wide, Style A as manufactured by W.H. Brady Co. or equal.

E. Install a one-inches by three-inches laminated plastic nameplate with ¼ inches white letters on a black background on each panelboard. Nameplate lettering shall be as shown on the Drawings. Nameplates shall be epoxy adhesive and stainless- steel-screw mounted.

END OF ARTICLE

This page intentionally left blank.

PACHECO CONDUIT INSPECTION AND REHABILITATION PROJECT ADDENDUM NO.1

ATTACHMENT L

SPECIFICATIONS ARTICLE 37.01 – GENERAL INSTRUMENTATION AND CONTROLS REQUIREMENTS

Project No. 91214001 & 95084002
Contract No. C0629

This page intentionally left blank.

ARTICLE 37.01

GENERAL INSTRUMENTATION AND CONTROLS REQUIREMENTS SECTION 37

PART 1 GENERAL

1.01 DESCRIPTION

A. Equipment shall be fabricated, assembled, installed, and placed in proper operating condition in full conformity with the Contract Documents and drawings, engineering data, instructions, and recommendations of the equipment manufacturer as approved by Engineer.

B. The work shall include but is not limited to furnishing, installing, and testing the equipment and materials detailed in the following Specification Sections:

I. Article 37.02 — Control Panels, Enclosures, and Cabinets

II. Article 37.03 — Panels instruments and devices

III. Article 36.01 — General Electrical Requirements

IV. Article 36.10— General Electrical Design and Installation Requirements

C. Where differences exist between the specific equipment Specification Sections of Section 37 and this general equipment Specification Section, the specific equipment Specification shall govern.

1.02 SCOPE OF WORK

1. The Contractor work shall include the following:

    1. Coordination with modification or demolition of the existing control system, adhering to the schedule of work for transition of the new control system with the District's existing system.

    2. The contractor shall provide modification in hardware and wiring in existing PLC/RTU panel and provide a new Hollister Termination Cabinet per contract drawings in the Bifurcation (or BIF) Turnout

    3. All field instrumentation, sensors, and devices as shown and as specified for monitoring and control functions as specified in this section.

    4. Development Standards will be made available to the Contractor after award of the Contract and a Non-Disclosure Agreement has been signed and executed by the Contractor staff working on the project.

    5. Troubleshoot, diagnose, and make operational the work performed by the Contractor.

    6. Train District staff.

7. Document both new and existing control system components.

2. The Contractor shall use the equipment, instrument, and loop numbering scheme that has been developed and shown on the Drawings. The Contractor shall also utilize the control descriptions covered in this Article 37.01 in the development of the Contractor's submittals. The Contractor shall not deviate from or modify said numbering scheme or process control logic without Engineer's approval.

1.03 NON-DISCLOSURE AGREEMENT HAS BEEN SIGNED AND EXECUTED BY REFERENCES AND RELATED SECTIONS

A. Related Requirements

1. Section 36—Electrical

B. Institute of Electrical and Electronic Engineers (IEEE)

1. IEEE Standard C2 – National Electrical Safety Code (NESC)

2. IEEE Standard 472 - Electrical Surge Protection

C. International Society of Automation (ISA)

1. ISA S5.2 - Binary Logic Diagrams for Process Operations

D. National Fire Protection Agency (NFPA)

1. NFPA 70 - National Electrical Code.

E. National Electrical Manufacturers Associations (NEMA)

1. NEMA ICS6 - Enclosures for Industrial Controls and Systems

2. NEMA ICS19 – Diagrams, Device Designations and Symbols

F. Underwriters Laboratories, Inc. (UL)

1. UL 508 – Industrial Control Equipment

1.04 SUBMITTALS

A. General

1 The drawings shall be complete; giving equipment specifications, details of connections, wiring, ranges, installation requirements, and specific dimensions. Submittals consisting of only general sales literature will not be acceptable.

2. Check shop drawings for accuracy and contract requirements prior to submittal. Shop drawings shall be stamped with the date checked and a statement indicating that the shop drawings conform to Specifications and Drawings. This statement shall also list all exceptions to the

Specifications and Drawings. Shop drawings not so checked and noted shall be returned unreviewed.

3. Engineer's review of submittals shall be for conformance with the design concept of the project and compliance with the Specifications and Drawings. Errors and omissions on approved shop drawings shall not relieve the Contractor from the responsibility of providing materials and workmanship required by the Specifications and Drawings.

4. Shop drawings shall fully demonstrate that the equipment and services to be furnished comply with the provisions of these Specifications and shall provide a true and complete record of the equipment as manufactured and delivered.

B. Submittal Requirements

1. Submittals shall be bound in separate three-ring "D" binders, with an index and sectional dividers, with all drawings provided in 11-inch by 17-inch format for inclusion within the binder. Provide suitable 11x17 format binders and submit drawings for review without "Z" folding or reducing in size.

2. The submittal drawings' title block shall include, as a minimum, the Contractor's registered business name and address, project name, drawing name, revision level, and personnel responsible for the content of the drawing.

3. Separate submittals shall be made for:

   (a) Project Plan, Deviation List, and Schedule

   (b) Coordination Workshops Agendas

   (c) Control Panel and Installation Electrical Schematic Diagrams Submittal

   (d) Testing Plan

   (e) Training Plan

   (f) Spares, Expendables, and Test Equipment

4. All submittals shall be provided to the Engineer for review in accordance with the Specifications.

5. Shop drawings shall fully demonstrate that the equipment and services to be furnished will comply with the provisions of these specifications and shall provide a true and complete record of the equipment as manufactured and delivered.

6. Submittals shall be bound in separate three-ring binders, with an index and sectional dividers, with all drawings reduced to a maximum size of 11-in by 17-in for inclusion within the binder.

7. The Contractor shall provide the Engineer with six (6) sets of each submittal, including drawings. In addition, a CD-ROM containing the file shall be provided.

8. Documents shall be bound in hard-covered binders. Each binder shall not be more than three inches thick. All binders shall have the same appearance except for the contents labeling. The submittals shall be subdivided into as many logical volumes as necessary so that no binders are overfilled.

9. All pages of submittals shall provide adequate margins to avoid loss of legibility due to binding or reproduction edge losses. The top, bottom, and right edge of all pages shall have a clear ¾″ margin. The left (binding) edge shall have a clear 1¼″ margin. All pages shall be either ANSI Size A (8-1/2″ x 11″) or Size B (11″ x17″). Pages which are reduced-size copies of larger originals shall not be reduced to a degree which compromises legibility. No lettering, symbols, or characters less than 1/16″ in height in final reproduction will be permitted.

10. Details of all copies shall be crisp, black, dense, and fully legible.

11. All drawings shall be per ISA standards where applicable.

12. All drawings shall be produced with the latest version of AutoCAD.

13. All drawings and documents shall have proper identification and cross-referencing. Reference drawings shall be indicated clearly.

14. Submittal shall include:

    (a) Transmittal sheet.

    (b) Cover page.

    (c) Submittal disposition page consisting of a submittal title heading only. The Engineer will use this page for the review stamp.

    (d) Table of Contents.

    (e) Overview including a description of what the submittal addresses, deviations from the Contract Documents, how the alternative provides equal functions, and Reference Specifications.

    (f) Contents (as outlined in these Specifications).

15. Electronic (CD) and hardcopies shall be submitted for the submittal. Written documentation shall be provided in the latest Microsoft Office file

format. Catalog data shall be Adobe Portable Document Format. All electronic files shall be submitted in an unlocked, editable state, and shall become the property of the District upon receipt.

16. Contractor's Project Plan

17. Project Plan shall, at a minimum, contain the following:

    (a) Overview of the proposed control system in clear text format describing the Contractor's understanding of the project work, system architecture drawing, interfaces to other systems, schedule, startup, and coordination.

    (b) Approach describing how the Contractor intends to execute the work written in clear text format. Approach shall include a discussion of procurement, fabrication, testing, installation, switchover, startup, etc. as applicable for this Project.

    (c) Preliminary coordination workshop agendas as specified in these Specifications.

    (d) Preliminary testing plans

    (e) Preliminary training plan

18. Exceptions to the Specifications or Drawings shall be clearly defined by the Contractor in a separate Deviation List. The Deviation List shall consist of a paragraph by paragraph review of the related Section 37 Specifications indicating conformance or any proposed deviations, the reason for exception, the precise nature of the exception and the proposed substitution so that a proper evaluation may be made by Engineer. The acceptability of any device or methodology submitted as an "or equal' or "exception" to the specifications shall be at the sole discretion of Engineer.

19. Prepare a control system project schedule using Microsoft Project scheduling software. Schedule shall be prepared in Gantt chart format clearly showing all major tasks, task dates and durations, milestone dates, linkages between tasks, and identification of critical path elements. at a minimum include:

    (a) Startup and commissioning period for each control system processor as shown on the Drawings. Incorporate any necessary work restrictions, milestones, and scheduling requirements required under the Special Provisions.

    (b) Schedule for all training including submittal and approval of O&M manuals, factory training, and site training.

C. Coordination Workshop Agenda: Agendas shall be submitted for the Coordination Workshop as specified in these Specifications. Submit proposed

Control System Coordination Workshop Agenda a minimum of four weeks prior to the scheduled workshop dates for review and comment by Engineer and modification by the Contractor as required.

D. BIF – PLC/RTU Panel Modification Hardware and Hollister Termination Cabinet Submittal:

1. Submittals and drawings shall include the installation and wiring details on the replacement of existing 8” Maple Systems OIT with the new 10” Maple Systems OIT in the PLC/RTU panel.

2. Submittals will also include drawings on the replacement of the floor mount type of existing Hollister Termination Cabinet as specified in Section 37.02. Panel assembly and elevation drawings shall be drawn to scale the front panel mounted devices and terminal blocks in the panel.

3. As a minimum, the modified PLC/RTU panel and the Hollister Termination Cabinet shall include the following:

   (a) Interior and exterior panel elevation drawings to scale.

   (b) Nameplate schedule.

   (c) Conduit identifiers shall be shown referenced to the conduit tag number shown on the Electrical Drawings.

   (d) Panel construction details.

   (e) Cabinet assembly and layout drawings to scale. The assembly drawing shall include a comprehensive bill of material on the drawing with the panel component clearly defined. The bill of material shall be cross-referenced to the assembly drawing so that a non-technical person can readily identify any component of the assembly by manufacturer and model number.

   (f) Fabrication and painting specifications including color (or color samples).

   (g) Panel control schematics detailing the electrical connections of all equipment in and on the panel. Diagrams shall include at a minimum power and signal connections; power sources; all panel ancillary equipment; protective devices; wiring and wire numbers; and terminal blocks and numbering. Provide specific wiring drawings for wiring in the panels. Wiring diagrams shall include points of connections to the 4 new Limitorque electric valve actuators installed on the Santa Clara pipes and Hollister pipes in the turnout.

   (h) Provide terminal schedules showing the terminal block construction requirements for all terminal block groups for PLC DI, DO & AI wiring. Terminal blocks shall be physically segregated by function and voltage.

(i) Control schematics shall be in conformance with NEMA standards and include wire colors, wire sizes, and device terminals.

(j) Control panel component catalog data and cut sheets for all control panel equipment shall be provided.

E. Installation of Electrical and Control Schematic

1. Provide electrical and control schematic drawings and PLC I/O wiring diagrams depicting wiring within the panel, connections to external devices, internal logic development, and panel distribution as applicable. Submit complete and comprehensive wiring and logic diagrams with the information specified and consistent with the drawings included in the Contract Documents.

(a) Layout, format, and labeling used on the electrical and control schematics shall match format and level of detail shown on the Drawings, generally in conformance with the level of detail presented in the sample wiring diagrams therein. Diagrams shall project panel and component specific name and number placeholders, protection devices, wire and cable identification labeling, power supply connections, specific circuit and panel specified requirements, etc. for a fully documented interconnected wiring system.

(b) As shown in the electrical and control schematic drawings on Hollister Main Valve and Hollister Bypass Valve operation, the District shall have an override OPEN/CLOSE PLC remote command control of these two valves from OIT or from Rinconada Water Treatment Plant over the remote PLC control from San Benito County Water District (or SBCWD).

(c) Field device and its wiring shall include the device tag and District loop number as shown on the Drawings along with a unique numeric identifier for each wire to ensure uniqueness. For example:

42" Hollister Main Valve Position Feedback wiring and 12" Hollister Bypass Valve Position Feedback wiring, etc.

(d) Provide new field wiring for discrete input, discrete output and analog input points with labels on two wire cables.

(e) All field wiring shall be verified to include conduit routing on the schematic.

(f) Electrical and control schematics shall include 120 VAC and 24 VDC power supply circuitry including line filters, 24 VDC power supplies, chargers for battery application where required, and terminal block distribution for AC, non-critical (DC), and critical (battery) powered loads.

(g) Two-wire and four-wire equipment shall be clearly identified and power sources noted.

(h) All panel and field wiring shall be tagged and indicated on the electrical and control schematic. Submit final wire numbering scheme for approval by District based on the specified requirements. Complete all terminal board identification and terminal board numbers.

(i) Incorporate panel power wiring and power supplies. Include all circuit breaker and protection devices including ratings.

F. Testing Plan

1. Test Procedure Submittals: Submit the procedures proposed to be followed for the PLC/RTU panel and Hollister Termination Cabinet test.

1.05. QUALITY ASSURANCE

A. The Contractor shall maintain a permanent, fully staffed and equipped service facility within 4 hours travel time of the Project site with full time employees capable of designing, fabricating, installing, calibrating, and testing the systems specified in these Specifications. At a minimum, the Contractor shall be capable of responding to on-site problems within 12 hours of notice.

B. The Contractor shall be a current Certified Member of the Control System Integrators Association (CSIA) and shall have maintained Certified Member status for at least the past two years.

C. Actual installation of the instrumentation system need not be performed by the Contractor's employees; however, the Contractor as a minimum shall be responsible for the technical supervision of the installation by providing on site supervision to the installers of the various components.

D. The Contractor shall furnish equipment that is the product of one manufacturer to the maximum practical extent. Where this is not practical, all equipment of a given type shall be the product of one manufacturer.

E. The Contractor shall be one of the following (listed in alphabetical order), or equal, as approved by the Engineer.

1. Mission Controls Company, Gilroy, California

2. MCC Controls, Vacaville, California

3. Tesco Controls Inc., Sacramento, California

4. Wunderlich-Malec, Pleasanton, California

F. Only approved contractors will be accepted. The Contractor shall name the proposed Contractor per the requirements of the Standard Provisions.

G. Being listed in this Section does not relieve any potential Contractor from meeting the qualifications specified in this Section. However, listed suppliers will not be required to submit a qualifications proposal. Suppliers interested in being

listed as an equal to the above listed suppliers shall submit three copies of a qualifications proposal to the District no later than four weeks before the bid opening date. Based on a review of the contents and completeness of the submitted data, a list of additional approved equals shall be issued by the District no later than five Days before the bid opening date.

H. Qualifications proposal shall include at a minimum the following:

1. Cover Letter:

   (a) Company name, contact name, address, fax number and email address

   (b) Cover letter shall be signed by an officer of the company.

2. Contractor Qualifications: The Contractor shall provide responses to all qualification requirements listed above in sufficient detail to show the specified minimum qualification requirements are met. Submit resumes of proposed project manager and project engineer, firm qualifications, relevant project descriptions, office locations, and other required data. Preprinted brochures alone without specifically addressing the specified qualification requirements will not be acceptable or adequate for judging the firm to be qualified.

1.06. DELIVERY, STORAGE, AND HANDLING

A. Shipping Procedures

1. After completion of shop assembly, factory test and approval of all equipment, cabinets, panels and consoles shall be packed in protective crates and enclosed in heavy duty polyethylene envelopes or secured sheeting to provide complete protection from damage, dust and moisture. Dehumidifiers shall be placed inside the polyethylene coverings. The equipment shall then be skid-mounted for final transport. Lifting rings shall be provided for moving enclosures without removing protective covering. Boxed weights shall be shown on shipping tags together with instructions for unloading, transporting, storing and handling at the job site.

2. Special instructions for proper field handling, storage and installation required by the manufacturer for proper protection, shall be securely attached to the packaging for each piece of equipment prior to shipment. The instructions shall be stored in resealable plastic bags or other acceptable means of protection.

3. All equipment furnished under related Specification Section 37 shall be shipped to the job site via dedicated air ride van.

II. Shipping Coordination

1. Coordinate shipping and installation of panel with phased construction sequence including demolition of existing panels, installation new process

units, and construction of new facilities as specified in the Contract Documents.

III. Identification During Shipping and Storage

1. Each component shall be tagged to identify its location, tag number and function in the system. Identification shall be prominently displayed on the outside of the package.

IV. Storage

1. Equipment shall not be stored out-of-doors. Equipment shall be stored in dry permanent shelters including in-line equipment and shall be adequately protected against mechanical damage. Equipment stored in unheated spaces shall have condensation space heaters installed to prevent moisture condensing on or within the equipment. Provide suitable power source for space heaters as required.

2. If any equipment or components are damaged during shipping or storage, such damage shall be repaired by the Contractor at his/her own cost and expense.

3. If any equipment or components are possibly exposed to water, they shall be thoroughly dried out, cleaned, and tested as directed by Engineer. Tests shall indicate whether the apparatus has been suitably restored or if replacement is necessary. The decision to replace a potentially compromised panel shall be at the sole discretion of the Engineer. All costs for restoring work or equipment replacement shall be borne by the Contractor at no additional cost to the District.

1.07 PROJECT/SITE REQUIREMENTS

Refer to Drawings for location of the BIF Turnout.

1.08 MAINTENANCE

I. Test Equipment

1. Additional test equipment as defined in the related technical Specification Sections of Articles 37.02 and 37.03.

II. Spare Parts

1. Provide spare parts of the type and quantity as specified in these Specifications.

2. All spare parts shall be carefully packed in cartons, labeled with indelible markings, and shall be adequately treated for a long period of storage. Complete ordering information including manufacturer's part number, part ordering information including manufacturer, part number, part name, and equipment name and number(s) for which the part is to be used shall be

supplied with the required spare parts. The spare parts shall be delivered and stored in a location directed by District.

3. Provide additional spare parts as specified under the related technical specification Sections of Articles 37.02 and 37.03.

1.09 GUARANTY

I. Guaranty period shall be as defined in Special Provisions.

II. Software update and reprogramming of the replaced OIT will be performed by District engineers. Contractor to provide latest released versions for of any other software provided under this Contract. The District shall have the latest software releases at the end of the guaranty period. However, only software releases approved for use by the District shall be installed on the District systems, and installation shall only be made upon specific written approval by the District.

1.10 COORDINATION WORKSHOPS

I. The Contractor shall schedule and hold mandatory control system Coordination Workshop during the Project. The Coordination Workshop shall include as a minimum the District, the Engineer, the Contractor, the Contractor Project engineer, and electrical subcontractor. District staff shall include construction managers, instrument & control (or I&C) engineers, SCADA engineers, electrical engineers, technicians, operators, and maintenance staff as required. The District shall determine which staff members will attend the workshop. Workshops shall all be held at the District's headquarters located at 5750 Almaden Expressway, San Jose, CA. 95118.

II. Schedule the Coordination Workshop a minimum of four weeks prior to the workshop date and include a draft agenda at the time of the request for review. Within one-week subsequent to the workshop, submit draft workshop minutes for review and comment; submit final minutes incorporating any comments as necessary. The Contractor shall be responsible for facilitating the workshop and providing presentation material to all participants. The Contractor shall document the proceedings of the Coordination Workshop and submit along with all materials used at the workshop.

1. Minutes from each workshop shall be submitted as a formal construction submittal per requirements of this specification within 10 working days of each workshop.

1.11 FINAL SYSTEM DOCUMENTATION

I. Submit operation and maintenance manuals covering instruction and maintenance on each type of equipment.

II. The instructions shall be bound in three-ring binders with drawings reduced or folded for inclusion and shall provide at least the following as a minimum.

1. A comprehensive index.

2. A complete "As Built" set of the Contractor approved hardware and panel fabrication shop drawings.

3. A complete list and data sheets of the equipment supplied, including serial numbers, ranges and pertinent data.

4. Full specifications on each item.

5. System schematic drawings "As Built" and “As-Left” details illustrating all components and final condition of each.

6. Detailed service, maintenance and operation instructions for each item supplied.

7. Special maintenance requirements particular to these systems shall be clearly defined, along with special calibration and test procedures.

8. The operation instructions shall also incorporate a functional description of the entire system, with references to the systems schematic drawings and instructions.

9. Complete parts lists with stock numbers and name, address, and telephone number of the local Supplier.

III. The Contractor’s final documentation shall be new documentation written specifically for this Project, but may include standard and modified standard documentation. Modifications to existing hardware or software manuals shall be made on the respective pages or inserted adjacent to the modified pages. All standard documentation furnished shall have all portions that apply clearly indicated. All portions that do not apply shall be lined out.

IV. The requirements for the Contractor’s final documentation are as follows:

1. As built documentation, shall include information from submittals, as described in this Specification, updated to reflect the as-built system. Any errors in or modifications to the system resulting from the Factory and/or Functional Acceptance Tests shall be incorporated in this documentation.

2. The Hardware Maintenance Documentation shall describe the detailed preventive and corrective procedures required to keep the system in good operating condition. Within the complete Hardware Maintenance Documentation, all hardware maintenance manuals shall make reference to appropriate diagnostics, where applicable, and all necessary timing diagrams shall be included. A maintenance manual or a set of manuals shall be furnished for all delivered hardware, including peripherals. The Hardware Maintenance Documentation shall include, as a minimum, the following information:

   (a) Operation Information - include a detailed description of how the equipment operates and a block diagram illustrating each major assembly in the equipment.

(b) Preventative-Maintenance Instructions – These instructions shall include all applicable visual examinations, hardware testing and diagnostic routines and the adjustments necessary for periodic preventive maintenance of the System.

(c) Corrective-Maintenance Instructions – Include guides for locating malfunctions down to the card-replacement level. These guides shall include adequate details for quickly and efficiently locating the cause of an equipment malfunction and shall state the probable source(s) of trouble, the symptoms, probable cause, and instructions for remedying the malfunction.

(d) Parts Information – Include the identification of each replaceable or field-repairable module. All parts shall be identified on a list in a drawing; the identification shall be of a level of detail sufficient for procuring any repairable or replaceable part. Cross-references between the Contractor’s part number and manufacturer's part numbers shall be provided.

(e) Manufacturer’s contact information including name, local representative, phone numbers, web sites, and e-mail contact information.

(f) Machine Readable Documentation - Provide two sets of as-built documentation on CD-ROMs or other approved machine readable format for all programs developed under this Contract. The machine-readable documentation shall be 100 percent compatible with the Software Listings previous defined and include all documentation files including logic and annotation files. Any changes made during or after factory acceptance test shall be incorporated.

(g) The Contractor shall investigate, diagnose, repair, update and distribute all documentation of corrected deficiencies that become evident during the guaranty period. All such documentation shall be submitted to Engineer within 30 Days of solving the problem.

3. Provide Operator's Manuals for the system operators. These manuals shall be separately bound and shall contain all information necessary for the operator to operate the system. The manuals shall be written in non-technical terms and shall be organized for quick access to each detailed description of the operator's procedure. Manuals shall contain, but not be limited to, the following information:

(a) A simple overview of the entire system indicating the function and purpose of each piece of equipment.

(b) A detailed operational description of all control panel provided.

(c) Step-by-step procedures for starting up or shutting down an individual component.

(d) Step-by-step procedures for starting up and shutting down the entire system.

(e) A comprehensive description of the operation and control of each plant process. All operator actions to these processes and the associated reaction described.

(f) A complete glossary of terms.

(g) Complete, step-by-step procedures for performing complete system or selected file backup and restoration.

4. Video based O&M documentation:

(a) In addition to the written hardware, operations, and other maintenance documentation specified above, provide additional video training clips to specifically describe methods for executing the following maintenance tasks. Provide electronic versions of video files on R/W CD ROM, thumb drives, or other portable memory storage medium.

1.12 MEASUREMENT AND PAYMENT

I. Work shall be considered incidental and compensation shall be included in the Contract prices paid for the various items of work and no additional time or compensation be allowed therefore.

PART 2 PRODUCTS

2.01 GENERAL REQUIREMENTS

I. General

1. Substitutions on functions or type of equipment specified will not be acceptable unless specifically noted. In order to insure the interchangeability of parts, the maintenance of quality, the ease of interfacing between the various subsystems and the establishment of minimums with regard to ranges and accuracy, strict compliance with the above requirements shall be maintained. In order to insure compatibility between all equipment, it shall be the responsibility of the Contractor to coordinate all interface requirements with mechanical and electrical systems and furnish any signal isolation devices that might be required.

B. Electrical

1. Equipment shall be designed to operate on a 60 Hertz alternating current power source at a nominal 120 volts, plus or minus 10 percent, except where specifically noted. Where possible, all field instruments shall be 24 VDC loop or network powered as specified. Regulators and power supplies required for compliance with the above shall be provided between power

supply and interconnected instrument loop or fieldbus link. Where equipment requires voltage regulation, constant voltage transformers shall be supplied.

2. Materials and equipment used shall be U.L. approved wherever such approved equipment and materials are available.

3. Equipment shall be designed and constructed so that in the event of a power interruption, the equipment specified hereunder shall resume normal operation without manual resetting when power is restored unless otherwise noted.

4. All transmitter output signals shall include signal and power source isolation.

PART 2 – **Nameplates**

1. General: Provide nameplates as specified below unless specified otherwise in the detailed technical Specifications of related Sections of Articles 37.02 and 37. 03.

2. All panels and field instruments shall be supplied with suitable nameplates that identify the panel and individual devices as required.

3. Nameplates shall be a 3/32-inch thick, black, and white, laminated Bakelite or Lamecoid with engraved inscriptions. The letters shall be white against a black background. Edges of the nameplates shall be beveled and smooth. Nameplates with chipped or rough edges will not be acceptable.

4. Orient nameplates to facilitate reading the device identifier from a cursory inspection. Do not mount nameplates behind or under equipment.

5. Nameplate fasteners and mounting shall be:

   (a) Stainless steel wire, 0.048-inch diameter with stainless steel crimped clamps for hanging nameplates.

   (b) Stainless steel screws for cabinet mounted nameplates

6. Nameplates shall be as recommended by ISA Recommended Practice RP60.6.

2.02 PANEL MARKINGS

I. Each control panel shall include markings per the requirements of NEC Article 409. Where the UL Label is used per the definition of Article 409 the UL Label shall apply to the enclosure, the specific equipment supplied with the enclosure, and the installation and wiring of the equipment within and on the enclosure. If required for UL labeling, provide ground fault protective devices, isolation transformers, fuses and any other equipment necessary to achieve compliance with UL 508 requirement. The Drawings do not detail all UL 508 requirements.

II. The UL label requirements shall apply to all panels except where enclosures contain instruments mounted through the enclosure walls or doors. In this case, panel construction shall meet all requirements of UL labeling as described above,

but no UL label is required. This exception applies only if UL Recognized instruments or devices for the intended purpose are not made.

PART 3 EXECUTION

3.01 GENERAL INSTALLATION

I. Equipment shall be installed in accordance with the manufacturer's instructions. The locations of equipment, transmitters, alarms and similar devices are diagrammatic only. Exact locations shall be as determined by the Contractor during development and fabrication of systems.

II. The drawings indicate the intent and not the precise nature of the interconnection between the individual instruments. Exact nature of the final equipment interconnections shall be as determined by the Contractor during development and fabrication of systems.

III. Where specific installation details are not specified or shown on the Drawings, installation recommendations from the equipment manufacturers or ISA shall be followed as applicable.

IV. Unless noted otherwise, calibrate all analog instruments from -2% to +103% of the indicated proves variable scale range shown on the Instrument Index. Calibrated range shall be as required to allow capturing out of range conditions by the process control system. Calibrate instruments using five point calibration over the range of the process and device output (e.g., 4-20mA, 1-5VDC)

V. The shield on each process instrumentation cable shall be continuous from source to destination and be grounded in accordance with the manufacturer’s recommendations or as directed by the Engineer. In no case shall more than one ground point be employed for each shield.

VI. Once installed, remove lifting rings from cabinets/assemblies. Permanent plugs shall be provided for the holes of the same material and color as the cabinet.

VII. All work shall be executed in full accordance with codes and local rulings. Should any work be performed contrary to said rulings, ordinances and regulations, the Contractor shall bear full responsibility for such violations and assume all costs arising there from.

VIII. Unless specifically shown in the Drawings, direct reading or electrical transmitting instrumentation shall not be mounted on process piping. Instrumentation shall be mounted on instrument racks or stands as detailed on the installation detail drawings. All instrumentation connections shall be provided with shutoff and drain valves. For differential pressure transmitters, valve manifolds for calibration, testing and blow down service shall also be provided.

IX. Provide all brackets, hangers, and miscellaneous metals required for mounting of equipment. Mounting hardware shall be installed in a workmanlike manner and not interfere with any other equipment.

X. The Contractor shall provide on-site service to oversee the installation, the placing and location of system components, their connections to the process equipment panels, cabinets and devices, subject to Engineer's approval. The Contractor shall certify that all field wiring for power and signal circuits are correctly done in accordance with best industry practice and provide for all necessary system grounding to insure a satisfactory functioning installation. The CONTRACTOR shall schedule and coordinate work under this Section with that of the electrical work specified.

XI. The Contractor shall obtain extended warranties (if necessary) from the original equipment manufacturers to cover the period of operation of the equipment from its initial installation until one (1) year after installation and acceptance by the District.

XII. Discrete control circuits shall be configured to fail-safe:

a. Alarm – Alarms shall be wired failsafe so that broken or loose wire will cause the alarm.

b. Valve position – shall be wired with negative logic. Both signals shall be ON at the PLC when the valve is in mid position. The ZB signal shall remain ON when the valve is fully CLOSED. The ZD signal shall remain ON when the valve is fully OPENED. Both signals OFF shall be an alarm condition.

c. Other – Signals which do not fall within these two types shall be handled on a case by case basis for the applications and shall be discussed, reviewed, and approved by Engineer.

3.02 TESTING

A. Confirmation of an operational control system is dependent upon results derived from test procedures as specified in this Section. As part of this contract the Contractor shall provide factory testing prior to shipment of the equipment and also testing of the equipment once installed in the field. Once the plant is in operation an additional Thirty-Day Acceptance Test is required.

B. Each test shall be the cause and effect type. The test-person shall initiate an input (cause). If the system or subsystem produces the correct result (effect), then the specific test requirement will have been satisfied.

C. All tests shall be conducted with the Engineer’s approval. Each test to be performed shall be described and a space provided for sign-off by the appropriate party upon satisfactory completion.

D. Copies of the sign-off test procedures, forms and checklists will constitute the required test documentation.

E. Provide all special testing materials and equipment. Wherever possible, perform tests using actual process variables, equipment, and data. Where it is not practical to test with real process variables, equipment, and data,

provide suitable means of simulation. Define these simulation techniques in the test procedures.

F. The Engineer reserves the right to test or retest all specified functions whether explicitly stated in the prior approved Test Procedures until the functional requirements of the overall system are achieved. No additional compensation shall be provided for any required extended testing.

G. The Engineer's decision shall be final regarding the acceptability and completeness of all testing.

H. No equipment shall be shipped until the Engineer has received all test results and approved the system as ready for shipment.

I. The Contractor shall provide the services of field service engineers, all special calibration and test equipment, and labor to perform the field tests.

J. Any additional hardware or software that may be required to successfully verify system operation shall be supplied at no cost to the District.

3.03 Factory Testing

Prior to shipment of the equipment, the following factory tests are required:

A. Unwitnessed Factory Test (UFT)

1. The entire system, except for primary elements, final control elements, and field mounted transmitters, shall be interconnected and tested to ensure that the system will operate as specified. All analog and discrete input/output points not interconnected at this time shall be simulated to ensure proper operation of all alarms, monitoring devices/functions and control devices/functions

2. All panels, consoles, and assemblies shall be inspected and tested to verify that they are in conformance with related submittals, Specifications, and Drawings. During the tests, all digital system hardware and software shall be operated for at least five days continuously without a failure to verify the system is capable of continuous operation.

   Tests to be performed shall include, but not be limited to, the following, and each test shall be specifically addressed in the Test Procedure submittal:

   (a) Building and loading the System Data Base.

   (b) Conduct online modifications to the data base.

   (c) Demonstrate operability of the interfaces (hardware and software).

(d) Simulate selected operating conditions to verify the performance of the monitoring and control functions.

(e) Generate reports using test data.

(f) Verify communication links between all remote sites. Testing of all parameters within the protocol shall be included.

B. Field Testing

Prior to Plant Startup, the following tests shall be performed:

1. **Operational Readiness Test (ORT)**

1. Prior to Startup and the Functional Acceptance Test, the entire system shall be certified (inspected, wired, calibrated, tested, etc, and documented) as installed and ready for the ORT as defined below.

2. Loop/Component Inspections and Tests: The entire system shall be checked for proper installation, calibrated and adjusted on a loop-by-loop and component-by-component basis to ensure conformance with related submittals and these Specifications.

(a) The Loop/Component Inspections and Tests shall be implemented using Engineer-approved forms and checklists.

(b) Each loop shall have a Loop Status Report to organize and track its inspection, adjustment and calibration. These reports shall include the following information and check off items with spaces for sign off by the system supplier:

- Project Name, Loop Number, and Tag Number for each component

- Check-offs/sign-offs for each component functionality, wiring and calibration

(c) Submit Field ORT results for review by the Engineer as described in paragraphs 1.04.D.3 and per Paragraph 1.04. E.

2. Functional Acceptance Test (FAT)

1. Prior to Startup and the Functional Acceptance Test (FAT), the entire installed instrument and control system shall be certified as Ready for Operation. All preliminary testing,

inspection, and calibration shall be complete as defined in the Operational Readiness Tests.

(a) Once the facility has been started up and is operating, a witnessed FAT shall be performed on the complete system to demonstrate that it is operating and in compliance with these Specifications. Each specified function shall be demonstrated on a paragraph-by-paragraph, loop-by-loop, and site-by-site basis.

(b) Loop-specific and non-loop-specific tests shall be the same as specified under Factory Tests except that the entire installed system shall be tested and all functions demonstrated.

(c) For FAT, the contractor shall perform the test per the FAT procedure and using the test report form prepared by the contractor, the District engineer shall witness each loop tested and will require each tested loop identified in the form to be initialed by the contractor and the District engineer.. Updated versions of the documentation specified to be provided during the Factory Tests shall be made available to the Engineer at the job site both before and during the tests. In addition, one copy of all O & M Manuals shall be made available to the Engineer at the job site both before and during testing.

(d) The specified daily schedule for the Factory Tests shall also be followed during the Functional Acceptance Testing.

(e) The system shall operate at least for a continuous one-hundred (100) hours without failure during the FAT.

(f) Punch-list items, issues, and resolutions noted during the test shall be documented on the Punch list/Resolution form.

(g) Submit FAT results for review by the Engineer as described in paragraphs 1.04.D.c and per Paragraph 1.04. G...

3. Thirty-Day Acceptance Test

1. After completion of the Operational Readiness and Functional Acceptance Tests, the Contractor shall be responsible for operation of each separate process system as it is incorporated into service for a period of thirty (30) consecutive days, under

conditions of full plant process operation, without a single non-field repairable malfunction. The 30-Day Acceptance Test may occur concurrently with the FAT.

(a) During this test, plant operating and Contractor personnel shall be present as required. The Contractor personnel shall have an intimate knowledge of the system hardware and software.

(b) While this test is proceeding, the District shall have full use of the system. Only plant operating personnel shall be allowed to operate equipment associated with live plant processes.

(a) Any malfunction during the tests shall be analyzed, and corrections made by the Contractor. The Engineer will determine whether any such malfunctions are sufficiently serious to warrant repeating the test.

(b) Any malfunction, during the 30-consecutive-day test period, which cannot be corrected within 24 hours of occurrence by the Contractor's personnel, or more than two similar failures of any duration, will be considered as a non-field-repairable malfunction.

(c) Upon completion of repairs by the Contractor, the test shall be repeated as specified in these Specifications.

(d) In the event of rejection of any part or function, the Contractor shall perform repairs or replacement within ninety (90) days.

(e) All data-base errors must be corrected prior to the start of each test period. The 30-day test will not be considered successful until all data base points are correct.

(f) The Total Availability of the system shall be greater than 99.5 percent during the test period and is defined as follows:

Total Availability = [1 – (down time / total time)] x 100%

(g) Down times caused by power outages originating external to the tested system will not be counted for calculating total availability.

END OF ARTICLE

This page intentionally left blank.

PACHECO CONDUIT INSPECTION AND REHABILITATION PROJECT ADDENDUM NO.1

ATTACHMENT M

SPECIFICATIONS ARTICLE 37.02 – CONTROL PANELS, ENCLOSURES, AND CABINETS

Project No. 91214001 & 95084002
Contract No. C0629

This page intentionally left blank.

PART 1 GENERAL

1.01 SCOPE OF WORK

A. The Contractor shall fabricate, install, and test Hollister Termination Cabinet as shown on the Drawings and as specified in these Specifications:

1.02 REFERENCES AND RELATED REQUIREMENTS

A. References

1. National Electrical Code (NEC): Article 250 Grounding.

2. National Electrical Manufacturer's Association (NEMA), including NEMA 250—Enclosures for Electrical Equipment (1,000 Volts Maximum).

3. Electrical Standard for Industrial Machinery NEPA 79.

4. Institute of Electrical and Electronics Engineers (IEEE).

5. ANSI/IEEE C62.41—IEEE Recommended Practice on Surge Voltages in Low Voltage AC Power Circuits.

6. Underwriter Laboratories, Inc.

B. Related Requirements

1. Article 37.01—General Instrumentation and Controls

2. Article 37.03—Panel Instruments and Devices

3. Article 36.01 — General Electrical Requirements

1.03 SUBMITTALS

A. Refer to Article 37.01 for submittal requirements.

1.04 STRUCTURAL DESIGN

A. Design connections and related details for seismic design criteria as specified in these Specifications.

B. For Equipment Systems with Weight of 400 Pounds or More, Provide Calculations for:

1. Determination of weight including panel internal components

2. Determination of centroid of equipment.

3. Determination of seismic forces and overturning moments.

4. Determination of shear and tension forces in connections.

5. Design of connection details based on calculated shear and tension forces.

C. Equipment Units Weighing 50 Pounds or More: Provide with lifting lugs or eyes to allow removal with hoist or other lifting devices.

PART 2 PRODUCTS

2.01 MANUFACTURERS

A. All manufacturers shall have been regularly engaged in the design, fabrication, and service of industrial control panels, enclosures, and cabinets for a minimum of five (5) years.

B. The manufacturer shall provide evidence of at least five (5) different installations of comparable equipment in similar environments, with a contact name and number for each. The contact information must be current and the manufacturer shall have communicated the potential for contact by District personnel regarding the previous work completed.

2.02 CONTROL PANELS, ENCLOSURES AND CABINETS

A. The following Paragraphs describe general fabrication requirements of control panels, enclosures, and cabinets.

1. Equipment Mounting/Arrangement

a. All components shall be securely mounted and arranged in a manner that permits easy servicing, adjustment, testing, and removal without disconnecting, moving, or disturbing any other component. Components mounted on the inside of panels shall be mounted on suitable racks or sub-panels, and not directly to the enclosure. Mounting shall be rigid and stable unless shock mounting is required by the manufacturer to protect equipment from vibration. Layout and arrangement of panels and panel-mounted components shall conform to ISA Recommended Practice RP60.3.

b. All components appearing in the Districts Bill of Materials for the system shall be identified with suitable plastic or metal engraved tags. The letters shall be white against a black background. The labels shall include the name of the piece of equipment, and its equipment or instrument number.

c. Front panel devices such as pushbuttons, switches, lights, and exhaust fans shall be mounted in front-door cutouts.

d. No fastening devices shall project through the outer surfaces of the cabinet.

e. Thermal loading calculations are to be performed and submitted for all control panels based on the expected maximum and minimum ambient temperatures at the installation location and leaving at least a 10 deg F margin of safety for operation of critical components within the panel.

2. Wiring

a. All field wiring shall comply with the requirements of the latest National Electrical Code requirement and Article 36.25, as applicable.

b. Panel wiring shall satisfy the following requirements:

(1) Power wire shall be type THHN and sized per applicable NEC requirements and No. 14 AWG stranded minimum for circuits 600 Volts and below unless specified otherwise.

(2) Control, status, and alarm wire inside the panel shall be No. 18 AWG Type THWN stranded unless specified otherwise. Control, status and alarm wire outside the panel shall be No. 14 AWG Type THWN stranded unless specified otherwise.

(3) Analog signal wire inside the panel shall be No. 18 AWG Type THWN stranded, twisted and shielded suitable for termination unless specified otherwise. Analog signal wire outside the panel shall be No. 14 AWG Type THWN stranded, twisted and shielded suitable for termination unless specified otherwise.

(4) All field wiring shall terminate in master numbered terminal strips, either one for each signal type or organized by PLC I/O module. The master terminal strips shall have a minimum of twenty percent (20%) spares included all wired spare I/O points (see section 2.02.A.2.b.12, below). Only one side of a terminal block strip shall be used for internal wiring. The field wiring side of the terminal shall not be within six (6) inches of the side panel or adjacent terminal board. Each terminal point shall be provided with an identification strip bearing a unique identification number. Field terminal strips shall be elevated and angled for ease of field connections, and shall have additional space of two inches on the panel side to accommodate modifications or additions needed after installation.

(5) All wiring to hand switches, relays, indicators, etc. which are a part of live circuits independent of the panel's normal

circuit breaker protection, shall be clearly identified as such.

(6) Control wires shall have non-insulated ferrules applied at both ends. The ferrules are to be applied using the proper ferrule manufacturer's crimping tool. Twin-wire ferrules shall not be used. Only one wire per ferrule is allowed.

(7) All wiring shall be clearly tagged and color-coded. All tag numbers and color-coding shall correspond to the panel wiring diagrams and loop drawings prepared by the Contractor and as specified in Article 37.01.

(8) All power wiring, control wiring, grounding, and DC wiring shall utilize different color insulation for each wiring system used as follow:

(a)	Line Power	Black
(b)	Neutral/Common	White
(c)	AC Control	Red
(d)	DC Control (+)	Blue
(e)	DC Control (-)	White/Blue
(f)	Equipment/Chassis Ground	Green
(g)	Externally Powered Circuits	Yellow

(9) All field wires shall be labeled the same at both ends. Labels should consist of the system area code, underscore character separator, function designation followed by loop number, followed by "1" or "2", or a capital letter depending on the signal (Example: FLT1_XSH0700A) unless otherwise specified. Analog signal wiring labeling shall be applied to the overall cable rather than individual wires of the cable. Internal panel wiring may use other wire numbering so long as all PLC I/O includes the appropriate labeling, described above, and that the resultant internal wire numbering provides for unique, unambiguous numbering .

(10) Wire and tube markers shall be the heat-shrink sleeve type with heat-impressed letters and numbers. Wire labels shall be black letters on white plastic tube. Labels shall be sized and shrunk to ensure they stay securely fixed to the wiring should the wire be disconnected for any reason.

(11) Shield wires shall be covered with shrink tubing prior to termination. Shrink tubing shall also be applied to the twisted shielded cable to cover any exposed shielding (wire braid or foil). The shrink tubing shall be sized and shrunk to ensure the tubing does not come off when the wiring is disconnected.

(12) All unused PLC I/O points are to be wired to terminals.

(13) All wiring within the panel shall be grouped together routed in slotted PVC wireways secured to the structure. Power and low voltage DC signal wiring shall be routed in separate wireways. Crossing of the two system wires shall be at right angles. Wiring troughs shall not be filled to more than sixty-percent (60%) visible fill. Wiring trough covers shall be match-marked to identify placement. If component identification is shown on covers for visibility, the ID shall also appear on the mounting subpanel.

(14) Wiring trough for supporting internal wiring shall be plastic type with snap-on covers. The side walls shall be louvered type to permit wiring changing without disconnecting.

(15) For terminations on components which do not have a secure compression type of lug, wire connectors shall be the hook-fork type with insulated barrel for crimp type compression connection to the wire.

(16) Instruments and circuits shall be provided with individual miniature circuit breakers to minimize system disruption.

(17) Each analog signal loop shall incorporate the following terminal block types:

(a) Circuit breaker type

(b) Standard type (2 each)

(c) Ground type (1 each)

(18) Each discrete input card will include a circuit breaker for each common group of inputs or for each eight inputs, whichever is smallest, and shall incorporate the following terminal block types:

(a) Standard type (quantity as required)

(19) Each discrete output card will include a circuit breaker for each common group of outputs or for each eight outputs, whichever is smallest, and shall incorporate the following terminal block types:

(a) Knife-disconnect type (quantity as required)

(20) Power and miscellaneous circuits shall use terminal blocks as appropriate for the load consistent with these guidelines. Signal amplifiers or isolators shall be provided for analog signals where loop resistance is greater than the transmitter output can overcome.

3. Wall mount type vertical panels located indoors shall be NEMA 12 construction as a minimum and be labeled by Underwriters Laboratories. The panels shall be constructed of 11 gauge thick sheet steel, suitably braced internally for structural rigidity and strength. All exposed welds, seams, or edges shall be ground smooth. Front panels, or panels containing instruments, shall be not less than 7 gauge thick stretcher-leveled sheet steel, reinforced to prevent warping or distortion. All outdoor panels and indoor panels specified as having a NEMA 4X rating shall be constructed of stainless steel.

4. Painting

   a. All sections shall be de-scaled, degreased, filled, ground and finished. The enclosure, when fabricated of steel, shall be finished with two rust resistant phosphate prime coats and two coats of enamel, polyurethane, or lacquer finish which shall be applied by either the hot air spray, or conventional cold spray, method.

   b. Stainless steel panels will not require a paint finish.

5. Panels shall be provided with full length front access doors as shown on the panel details. Front access doors with mounted instruments or control devices shall be of sufficient width to permit door opening without interference from flush mounted instruments. All doors shall be mounted with strong, continuous, piano type hinges and be provided with lockable door handles and three point latches.

6. Approximate size and equipment layout is shown on the panel details.

7. Overhead fluorescent lighting shall be provided and automatically switched on when the panel door is opened.

8. The panel shall be suitable for top or bottom conduit entry as required by the Electrical Drawings. For top-mounted conduit entry the panel top shall be provided with nominal one-foot square removable access plates which may be drilled to accommodate conduit and cable penetrations. All conduit and cable penetrations shall be provided with ground bushings, hubs, gasketed locknuts, or other accessories as required to maintain the NEMA rating of the panel and electrical rating of the conduit system.

9. Wall- or Framing Channel- Mounted Panels

a. Unless noted otherwise on the Drawings, all indoor panels shall be NEMA 12 as a minimum and fabricated of not less than USS 14 gauge steel.

10. Panels shall have complete isolation between 480 volts power and 120 volts (and lower) power by full height and width steel internal panel barriers.

11. Panels shall be UL labeled.

12. Surge protectors shall be provided on all incoming power supply lines at each panel as specified in Article 37.03 or as indicated on the Drawings.

13. An inside pocket shall be provided to hold the panel drawings. One copy of accepted submittal drawings shall be shipped with panels in a sealed plastic bag stored in the panel drawing pocket.

14. An Extended Sun Shade shall be provided for outdoor panels for the protection of displays and indicator lights, etc.

15. Heating, cooling, dehumidifying, and filtering devices shall be provided in control panels, enclosures, and cabinets as required to maintain internal ambient conditions within the equipment's environmental operating range.

    a. Panels containing electronic components such as panel instruments, programmable logic controllers, remote I/O and adjustable speed drives, as required to maintain an internal air temperature of 90°F, maximum, or as indicated on the Drawings shall be modified to include a thermostatically controlled exhaust blower.

    b. Intake and Exhaust Openings: Openings shall be provided with filters and louvers, and shall be adequately sized per manufacturer's guidelines. Inlet openings shall be high on the side of the enclosure, and exhaust openings low on the opposite side of the enclosure. Coordinate the location of inlet and exhaust openings with adjacent-mounted equipment to ensure that the openings will not be blocked. Openings may be located on the front of the enclosure if sides are blocked by other equipment.

16. A panel identification nameplate shall be attached near the top center of the enclosure door. Nameplates shall be provided for all door-mounted equipment. Nameplates shall be a 3/32-inch thick, black and white, laminated Bakelite or Lamicoid with engraved inscriptions. The letters shall be white against a black background. Edges of the nameplates shall be beveled and smooth. Nameplates with chipped or rough edges will not be acceptable. Nameplates shall be attached to panels by stainless-steel screws; gluing-only is not acceptable.

2.03 ENCLOSURES

A. Enclosures shall be:

1. Hoffman

2. Rittal

3. Gaylord Manufacturing

4. or equal.

PART 3 EXECUTION

3.01 GENERAL

A. Enclosures, cabinets, and wall mount type of control panels shall be pre-assembled, or assembled prior to arrival at the site.

B. The Contractor is responsible for providing all tools, equipment, and accessories required for proper installation of all enclosures, cabinets, and control panels.

3.02 INSTALLATION

A. Enclosures, cabinets, and control panels shall be mounted upright and in an accessible location. Appropriate clearance for door movement, latching, and locking shall be provided.

B. Enclosures, cabinets, and control panels shall not be used as pull boxes or junction boxes, unless specified otherwise.

C. Seal all conduits entering control panels with duct sealing compound per Section 36.

D. Install conduit gasket, sealing material, and NEC Article 500 Seal-Off as specified in Section 36.

E. Install signal grounding conductor and grounding electrode as required by the panel manufacturer.

F. Connect panel equipment grounding (safety) terminal to the building or facility ground grid with No. 6 AWG green insulated conductor.

G. Enclosure sizes shown on the Drawings are a guide. The Contractor shall be responsible for final sizing of the control panels, taking into account mounting location, space requirements, including environmental, conditions. Any differences in panel dimensions from the Drawings shall be approved by the Engineer. If a larger or custom enclosure is required, the Contractor shall furnish such enclosure at no additional cost to the District.

H. One pint of touch-up paint shall be furnished for each panel of the paint type and color used for the panel finish coat.

END OF ARTICLE

This page intentionally left blank.

PACHECO CONDUIT INSPECTION AND REHABILITATION PROJECT ADDENDUM NO.1

ATTACHMENT N

SPECIFICATIONS ARTICLE 37.03 – PANEL REQUIREMENTS

Project No. 91214001 & 95084002
Contract No. C0629

This page intentionally left blank.

PART 1 GENERAL

1.01 SCOPE OF WORK

A. The Contractor shall complete all work and furnish all materials required to procure, install, calibrate, and test all the new panel instruments in the PLC/RTU panel and in the Hollister Termination Cabinet as shown on the Drawings and as specified in these Specifications.

1.02 RELATED REQUIREMENTS

A. Article 37.01 — General Instrumentation and Controls

B. Article 37.02 — Control Panels, Enclosures and Cabinets

C. Article 36.01 — General Electrical Requirements

1.03 SUBMITTALS

A. Refer to Article 37.01 for submittal requirements.

PART 2 PRODUCTS

2.01 MANUFACTURER

A. All Manufacturers of materials and equipment specified in these Specifications shall have been regularly engaged in the design, fabrication, and/or service of instruments provided for a minimum of five (5) years.

B. Each manufacturer shall have an authorized service facility within 150 miles of the project site and offer on-site support within 48 hours.

C. All materials shall be Underwriters Laboratory (UL) certified.

2.02 MATERIALS AND EQUIPMENT

A. General Requirements:

1. All panel instruments and devices shall be furnished per District's Bill of Materials included in design drawings.

2. Electronic panel instruments shall be industrial-grade instruments with a proven reliability record. Scales shall be calibrated in engineering units.

3. Instruments shall have matching or compatible fascia such as height, finish, color, and display color, and with arrangement to provide a logically grouped panel display.

4. Electronic panel instruments shall be able to operate from a 120 volts AC plus or minus 10 percent, 60 Hertz, or 24 volts DC plus or minus 10 percent power supply. Instruments in the same panel shall be powered from the same power supply.

5. Operating temperature range shall be 0 to 120 degrees F and relative humidity to 90 percent non-condensing.

2.03 PANEL DEVICES

A. Indicating Lights:

1. Manufacturer shall be one of the following:

a. Allen-Bradley, Bulletin 800.

b. Or equal.

2. Indicating lights shall be heavy-duty, oil-tight type, which utilizes 24 VDC LED indicators.

3. Indicating lights shall be provided with a legend faceplate as indicated on the Drawings.

4. Lamps shall be easily replaceable from the front of the indicating light. Push-To-Test feature shall allow a common test of all panel indicating lights by use of dual diodes integral with the indicating light.

B. Pushbuttons/Selector Switches:

1. Manufacturer shall be one of the following:

a. Allen-Bradley, Bulletin 800.

b. Or equal

2. Pushbuttons shall be heavy-duty, oil-tight/watertight, with 24VDC contacts of the quantity and type indicated in the Bill of Materials on the Drawings.

3. Selector switches shall have knob or wing level operators as indicated on the Drawings.

4. Engraved legends on a legend faceplate.

C. Control Relays:

1. Manufacturer shall be one of the following:

a. IDEC, Series RH

b. Or equal.

2. Provide control relays installed in instrument and control panels and enclosures with plug-in socket base type with dustproof plastic enclosures.

3. Relays shall function as indicated on the Drawings, in accordance with design requirements, and shall have Form “C” double-throw contacts.

4. Electronic switching-duty relays shall have gold-plated or gold alloy contacts suitable for use with low level signals rated minimum 2.5 amperes AC and 1.0 amperes DC.

5. Relays utilized for computer input, alarm input, or indicating light service shall have contacts rated not less than five amperes.

6. Time delay relays shall have dials or switch settings engraved in seconds, with timing repeatability of plus or minus 2.0 percent of setting. Time delay shall be adjustable and available in ranges from 0.1 second to 4.5 hours.

7. Provide latching and special purpose relays as indicated for the specific application.

8. Relays shall have a built-in lamp, LED or neon, to indicate an energized relay.

D. Circuit Breakers

1. Manufacturer’s shall be one of the following:

a. EATON, Series FAZ

b. Or equal.

2. Circuit breakers shall be din rail-mounted. End cover and end clamps shall be installed to secure terminal blocks.

E. Terminal Blocks and Accessories

1. The following terminal block hardware shall be used unless otherwise specified:

a. Standard Type: Universal Feed-Through Terminal Block; Phoenix 3004362 or equal.

b. Ground Type: Grounding Terminal Block; Phoenix USLKG4, or equal.

c. Rail: Phoenix NS35/15, or equal.

d. End clamps: Phoenix 3003020, or equal.

e. Terminal markers: Phoenix Contact Zack marker system ZB using the decade labeling system.

f. Fixed Bridge Bar: Phoenix FBR 106, or equal.

g. Other miscellaneous terminal block accessories shall be in accordance with listed terminal blocks.

2. Terminal blocks shall be din rail-mounted. End covers and end clamps shall be installed to secure terminal blocks.

2.04 TESTING

A. Control Panel shall be tested at the factory prior to shipment to the site. All construction, fabrication, modifications, and wiring shall be complete prior to any witnessed testing.

B. Control Panel shall be provided with completed factory testing documentation, including up-to-date shop drawings.

C. The Contractor shall schedule a Witnessed Factory Test for the District to review appearance, layout, and functionality of all Control Panels.

D. The Contractor shall provide thirty (30) days advance notice of the Witnessed Factory Test. The test shall be of sufficient duration to properly inspect all panels, panel devices, panel wiring and software/display functionality. A test schedule or agenda shall be submitted along with advance notice of the test.

E. If the testing facility is greater than 120 miles from District Headquarters, the Contractor shall provide transportation, meals, and lodging for up to four (4) District staff members for the duration of the test.

F. The Contractor shall provide all necessary testing equipment and appurtenances, including meters, signal generators, power, lighting, and safety equipment.

G. All panels must be tested and accepted, in writing, by the Engineer prior to shipment to the site and installation.

H. Refer to Article 37.01, Part 3.02 for other testing requirements.

PART 3 EXECUTION

3.01 GENERAL

A. The Contractor shall deliver and install all Control Panels as shown on the Drawings and specified in these Specifications.

3.02 INSTALLATION

A. The Contractor shall deliver and install all panels in the locations shown on the Drawings.

B. The control panel shall be installed as shown on the drawings.

3.03 FIELD TESTING

A. Refer to Article 37.01, Part 3.02 for field testing details and requirements.

END OF ARTICLE

This page intentionally left blank.

PACHECO CONDUIT INSPECTION AND REHABILITATION PROJECT ADDENDUM NO.1

ATTACHMENT O

ADDED DRAWING SHEETS
GE-01-GE-08, E-001-E-002,
E-102-E-103, E-109-E-112, E-115-E-121
ED-102, ED-109-ED-112, ED-115

Project No. 91214001 & 95084002
Contract No. C0629

DRAWING INDEX

SHEET CODE	SHEET DESCRIPTION	SHEET NUMBER
	GENERAL (ELECTRIC)	
GE-01	COVER SHEET/DRAWING INDEX	55.1 OF 55
GE-02	STANDARD SYMBOLS	55.2 OF 55
GE-03	STANDARD SYMBOLS	55.3 OF 55
GE-04	ELECTRICAL SYMBOLS AND ABBREVIATIONS	55.4 OF 55
GE-05	BIF SINGLE LINE DIAGRAM	55.5 OF 55
GE-06	BIF VAULT CONDUIT LAYOUT	55.6 OF 55
GE-07	BIF CONDUIT AND WIRE SCHEDULE	55.7 OF 55
GE-08	ELECTRICAL DETAILS	55.8 OF 55
	DEMOLITION (ELECTRIC)	
ED-102	COMMON POWER CONTROL WIRING (DE-TERM)	55.9 OF 55
ED-109	SLOT 7 – DISCRETE INPUT MODULE CONTROL WIRING (DE-TERM)	55.10 OF 55
ED-110	SLOT 7 – DISCRETE INPUT MODULE CONTROL WIRING (DE-TERM)	55.11 OF 55
ED-111	SLOT 8 – DISCRETE INPUT MODULE CONTROL WIRING (DE-TERM)	55.12 OF 55
ED-112	SLOT 8 – DISCRETE INPUT MODULE CONTROL WIRING (DE-TERM)	55.13 OF 55
ED-115	SLOT 10 – DISCRETE OUTPUT MODULE CONTROL WIRING (DE-TERM)	55.14 OF 55
	ELECTRICAL	
E-001	BACK PANEL LAYOUT	55.15 OF 55
E-002	PLC DETAIL LAYOUT & CABLE CONNECTIONS	55.16 OF 55
E-102	COMMON POWER CONTROL WIRING	55.17 OF 55
E-103	COMMON POWER CONTROL WIRING (CONTINUED)	55.18 OF 55
E-109	SLOT 7 – DISCRETE INPUT MODULE CONTROL WIRING	55.19 OF 55
E-110	SLOT 7 – DISCRETE INPUT MODULE CONTROL WIRING	55.20 OF 55
E-111	SLOT 8 – DISCRETE INPUT MODULE CONTROL WIRING	55.21 OF 55
E-112	SLOT 8 – DISCRETE INPUT MODULE CONTROL WIRING	55.22 OF 55
E-115	SLOT 10 – DISCRETE OUTPUT MODULE CONTROL WIRING	55.23 OF 55
E-116	SLOT 10 – DISCRETE OUTPUT MODULE CONTROL WIRING	55.24 OF 55
E-117	SLOT 11 – ANALOG INPUT MODULE CONTROL WIRING	55.25 OF 55
E-118	HOLLISTER MAIN VALVE CONTROL SCHEMATIC	55.26 OF 55
E-119	HOLLISTER BYPASS VALVE CONTROL SCHEMATIC	55.27 OF 55
E-120	HOLLISTER TERMINATION CABINET	55.28 OF 55
E-121	HOLLISTER TERMINATION CABINET 24VDC ELECTRICAL DISTRIBUTION	55.29 OF 55

REV	DESCRIPTION	DATE	APPR.	REFERENCE INFORMATION AND NOTES
1	ADDENDUM #1	07/17	TL	

ADDENDA DRAWING
07-21-17

DATE 07-21-17
DESIGN N. MORAR
DRAWN J. FORD
CHECKED A. TAILOR

ENGINEERING CERTIFICATION
REGISTERED PROFESSIONAL ENGINEER NAGIN MORAR No. C46654 CONTROL SYSTEMS STATE OF CALIFORNIA
07.21.2017
PROJECT ENGINEER DATE

Santa Clara Valley Water District

PROJECT NAME AND SHEET DESCRIPTION:
PACHECO CONDUIT INSPECTION AND REHABILITATION PROJECT
COVER SHEET/DRAWING INDEX

SCALE: NOT TO SCALE
VERIFY SCALES 0 1"
BAR IS ONE INCH ON ORIGINAL DRAWING IF NOT ONE INCH ON THIS SHEET, ADJUST SCALES ACCORDINGLY

PROJECT NUMBER: 91214001
SHEET CODE: 1 GE-01
SHEET NUMBER: 55.1 OF 55

USERNAME: Amirabde 7/19/2017 4:33 PM
FILENAME: K:\Active Projects\MP-91214001\PACHECO PL REHAB PROJECT\SHEETS\ADDENDA 1\GE-01.dwg
DOCUMENT NUMBER: XXXX-X-0000-0000000.00

CONDUCTORS

- CONDUCTOR
- CONDUCTORS NOT CONNECTED
- CONDUCTORS CONNECTED
- CONDUCTOR SHIELD
- FIELD CONDUCTOR
- EARTH GROUND
- CHASSIS GROUND
- SHIELD GROUND (ISOLATED IF REQUIRED BY SPEC)

TERMINALS

- 2 — FEED THROUGH TERMINAL BLOCK
- 1 — KNIFE DISCONNECT TERMINAL BLOCK
- #### — EXTERNALLY LOCATED DEVICE TERMINAL BLOCK
- FU _A — FUSE BLOCK

RELAY COILS

- CR — DEVICE ID; CONTROL RELAY WITH TERMINALS
- MS — MOTOR STARTER
- TD, SET @ XXSEC — ELECTRIC TIMER WITH ADJUSTABLE TIMING RANGE
- SV — SOLENOID
- OL — THERMAL OVERLOAD

SWITCHES

- DESC1 / DESC2 — DESCRIPTION TEXT (EXAMPLE: LAMP TEST)
- PB — NORMALLY OPEN NEMA FORM "X" CONTACT PUSHBUTTON
- DESC1 / DESC2 / PB — NORMALLY CLOSED NEMA FORM "Y" CONTACT PUSHBUTTON
- DESC1 / DESC2 / PB — NORMALLY CLOSED MUSHROOM HEAD E-STOP
- MECHANICAL CONNECTION
- DESC1 / DESC2 / SS / POS1 POS2 / 0X — TWO POSITION SELECTOR SWITCH SHOWN IN 'POS1'
- CONTACT MADE IN 'POS2'
- DESC1 / DESC2 / SS / POS2 / POS1 POS3 / X00 / 00X — THREE POSITION SELECTOR SWITCH SHOWN IN 'POS1' POSITION; NEMA FORM "Z" CONTACTS
- CONTACT MADE IN 'POS3'
- DESC1 / DESC2 / SS / POS2 POS3 / POS1 POS4 / X000 / 00X0 — FOUR POSITION SELECTOR SWITCH SHOWN IN 'POS1' POSITION
- CONTACT MADE IN 'POS3'
- POS2 / POS1 POS3 / 0X0 / X00 / 00X — THREE POSITION SELECTOR SPRING RETURN TO P0S2

LIMIT SWITCHES

- DESC1 / DESC2 / LS — NORMALLY OPEN
- DESC1 / DESC2 / LS — NORMALLY CLOSED

LIMIT SWITCHES (CONTINUED)

- DESC1 / DESC2 / LS — NORMALLY OPEN HELD CLOSED
- DESC1 / DESC2 / LS — NORMALLY CLOSED HELD OPEN

PROCESS SWITCHES

- DESC1 / DESC2 / WS — TORQUE SWITCH NORMALLY OPEN CLOSE ON INCREASE TORQUE
- DESC1 / DESC2 / WS — TORQUE SWITCH NORMALLY CLOSED OPEN ON INCREASE TORQUE
- DESC1 / DESC2 / LS — LIQUID LEVEL SWITCH NORMALLY OPEN CLOSE ON RISE
- DESC1 / DESC2 / LS — LIQUID LEVEL SWITCH NORMALLY CLOSED OPEN ON RISE
- DESC1 / DESC2 / FS — FLOW SWITCH NORMALLY OPEN CLOSE ON INCREASE FLOW
- DESC1 / DESC2 / FS — FLOW SWITCH NORMALLY CLOSED OPEN ON INCREASE FLOW
- DESC1 / DESC2 / PS — PRESSURE SWITCH NORMALLY OPEN CLOSE ON RISE
- DESC1 / DESC2 / PS — PRESSURE SWITCH NORMALLY CLOSED OPEN ON RISE
- DESC1 / DESC2 / TS — TEMPERATURE SWITCH NORMALLY OPEN CLOSE ON RISE
- DESC1 / DESC2 / TS — TEMPERATURE SWITCH NORMALLY CLOSED OPEN ON RISE

PILOT LIGHTS

- PL / A — PILOT LIGHT COLOR: AMBER

COLOR CODES
A-AMBER
W-WHITE
R-RED
B-BLUE
G-GREEN
Y-YELLOW

PILOT LIGHTS (CONTINUED)

- PL / R — PUSH TO TEST PILOT LIGHT COLOR: RED

COIL CONTACTS

- CR — NORMALLY OPEN CONTACT NEMA FORM "A" CONTACT
- CR — NORMALLY CLOSED CONTACT NEMA FORM "B" CONTACT
- CR / CR — NORMALLY OPEN WITH NORMALLY CLOSED CONTACT NEMA FORM "C" CONTACTS
- CR — NORMALLY OPEN CONTACT NEMA FORM "A" CONTACT WITH TERMINALS
- CR — NORMALLY CLOSED CONTACT NEMA FORM "B" CONTACT WITH TERMINALS
- TD — NORMALLY OPEN CONTACT ON DELAY
- TD — NORMALLY CLOSED CONTACT ON DELAY
- TD — NORMALLY OPEN CONTACT OFF DELAY
- TD — NORMALLY CLOSED CONTACT OFF DELAY
- LIGHT EMITTING DIODE
- PHOTO RECEPTIVE DIODE

MISCELLANEOUS

- CB / ##AMP — CIRCUIT BREAKER WITH AMPERAGE
- FU / AMP — FUSE WITH AMPERAGE
- AH — AUDIBLE DEVICE
- ETM — ELAPSED TIME METER
- R / 250 OHMS — RESISTOR 250 OHM
- D — RECTIFIER, DIODE
- C — CAPACITOR, ELECT.
- H1 H3 H2 H4 / X1 X2 — XF 480V PRI/120V SEC KVA; TRANSFORMER SECONDARY VOLTAGE AND RATING INDICATED AS APPLICABLE

LINE REFERENCING KEY CODE

TO/FROM LINE REFERENCING: E-XXX-XX
- LINE NUMBER
- SHEET CODE NUMBER

EXAMPLE: TO: E-101-30

COIL CONTACT REFERENCING: E-XXX-XX
- LAST TWO DIGITS = LINE NUMBER
- SHEET CODE NUMBER

NOTE: UNDERLINE NUMBERS REPRESENTS N.C. CONTACTS

EXAMPLE: E-101-02
- LINE NUMBER
- SHEET CODE NUMBER

FORM "A" OR "X" CONTACT: E-XXX-XX

FORM "B" OR "Y" CONTACT: E-XXX-XX

FORM "C" OR "Z" CONTACTS: E-XXX-XX, E-XXX-XX

REV	DESCRIPTION	DATE	APPR.
1	ADDENDUM #1	07/17	TL

ADDENDA DRAWING 07-21-17

REFERENCE INFORMATION AND NOTES

DATE 07-21-17
DESIGN N. MORAR
DRAWN J. FORD
CHECKED A. TAILOR

ENGINEERING CERTIFICATION
REGISTERED PROFESSIONAL ENGINEER — HAGIN MOJARRAD — No. C56856 — CONTROL SYSTEMS — STATE OF CALIFORNIA
07.21.2017
PROJECT ENGINEER DATE

Santa Clara Valley Water District

PROJECT NAME AND SHEET DESCRIPTION:
PACHECO CONDUIT INSPECTION AND REHABILITATION PROJECT
STANDARD SYMBOLS

SCALE: NOT TO SCALE
VERIFY SCALES: 0 1"
BAR IS ONE INCH ON ORIGINAL DRAWING IF NOT ONE INCH ON THIS SHEET, ADJUST SCALES ACCORDINGLY

PROJECT NUMBER: 91214001
SHEET CODE: 1 GE-02
SHEET NUMBER: 55.2 OF 55

USERNAME: JENNFORD 7/19/2017-4:33 PM
FILENAME: K:\Active Projects\MP-91214001\PACHECO PL REHAB PROJECT\SHEETS\ADDENDA 1\GE-02.dwg
DOCUMENT NUMBER: XXXX-X-0000-000000.00

COMPONENT ABBREVIATIONS / FAMILY CODES

PREFIX	DESCRIPTION
1P	SINGLE PHASE
AC	AIR CONDITIONER
AD	AUTO DIALER
AH	ALARM HORN
AL	ALARM LIGHT
AM	AMP METER
AN	ANNUNCIATOR
AR	ALTERNATING RELAY
AWG	AMERICAN WIRE GAUGE
BA	BATTERY
BATT	BATTERY
CA	CABLES
CB	CIRCUIT BREAKER
CKT	CIRCUIT
CMD	COMMAND
COM	COMMON
CONT	CONTINUED
CR	CONTROL RELAY
CT	CURRENT TRANSFORMER
DB	DISTRIBUTION BLOCK
DC	DIRECT CURRENT
DCC	DATA COMMUNICATION CHANNEL
DI	DIODE
DWG	DRAWING
EC	ELECTRONIC DEVICES
ELECT	ELECTRICAL
EMER	EMERGENCY
EN	ENCLOSURE
ETM	ELAPSED TIME METER
EXC	EXECUTIVE
FI	FLOW INDICATOR
FO	FIBER OPTIC
FS	FLOW SWITCH
FU	FUSE
G	GROUND
GB	GROUND BUS
GFI	GROUND FAULT INTERRUPTER
GND	GROUND
HGL	HYDRAULIC GRADE LINE
HTR	HEATER
IM	INPUT MODULE
ISO	SIGNAL ISOLATOR
LA	LIGHTNING ARRESTOR
LP	LIGHTING PANEL
LR	LATCHING RELAY
M	MOTOR
MOV	MOTOR OPERATED VALVE
MS	MOTOR STARTER, CONTACTORS
MTD	MOUNTED
N	NEUTRAL
NC	NORMALLY CLOSED
NO	NORMALLY OPEN
NP	NAME PLATE
OIT	OPERATOR INTERFACE TERMINAL

PREFIX	DESCRIPTION
OL	OVERLOAD
OM	OUTPUT MODULE
OPT	OPTICAL ISOLATOR
OV	OVER VOLTAGE DETECTOR
PB	PUSH BUTTON
PC	PERSONAL COMPUTER
PC	PULL CORD
PH	PHASE
PL	PILOT LIGHT
PLC	PROGRAMMABLE LOGIC CONTROLLER
PM	POWER OR PHASE MONITOR
PN	PNEUMATICS
PR	PRESSURE REGULATOR
PS	PRESSURE SWITCH
PS	POWER SUPPLY
R	RESISTANCE
RE	RADIO EQUIPMENT
REC	RECEPTACLE
REF	REFERENCE
RTN	RETURN
RTU	REMOTE TERMINAL UNIT
SB	SWITCH BOARD
SBCWD	SAN BENITO COUNTY WATER DISTRICT
SC	SANTA CLARA
SECT	SECTION
SHLD	SHIELDED
SP	SURGE PROTECTOR
SS	SELECTOR SWITCH
SV	SOLENOID VALVE
SW	SOFTWARE
TD	TIME DELAY RELAY
TG	TOGGLE SWITCH
T/O	TURN OUT
TS	TEMPERATURE SWITCH
TSP	TWISTED SHIELDED PAIR
TT	TEMPERATURE TRANSMITTER
UM	UTILITY METER
UPS	UNINTERRUPTIBLE POWER SUPPLY
VFD	VARIABLE FREQUENCY DRIVE
VLV	VALVE
VM	VOLT METER
WS	WEIGHT OR TORQUE SWITCH
XF	TRANSFORMER
ZS	LIMIT SWITCH

WIRE NUMBERING AND COLOR STANDARDS

RESERVED NUMBER	DESCRIPTION	COLOR CODE
1	120 VAC POWER	RED
N	120 VAC NEUTRAL	WHT
10	GROUND FAULT CIRCUIT POWER	RED WITH LABEL
N2	GROUND FAULT CIRCUIT NEUTRAL	WHT WITH LABEL
3	24 VDC POSITIVE	BLU
4	24 VDC COMMON	WHT WITH BLU STRIPE
5	12 VDC POSITIVE	BLU
6	12 VDC COMMON	WHT WITH BLU STRIPE
7	24 VAC POWER	ORG
8	24 VAC NEUTRAL	BRN
GND	GROUND 12 AWG	GRN
TSP	SHLD 2 CONDUCTOR TWISTED PAIR	BLK (-) AND WHT (+)
	INCOMING POWER AC	BLK
	EXTERNAL POWER SOURCE	ORG
	EXTERNAL POWER SOURCE NEUTRAL	WHT WITH YEL STRIPE

WIRING NUMBERING: XXX-XX

- SEQUENTIAL NUMBER
- SHEET CODE NUMBER

EXAMPLE: 110-01
FIRST WIRE DEFINED ON SHT E-110

WIRE COLOR ABBREVIATIONS

BLK	BLACK
BLU	BLUE
BRN	BROWN
CLR	CLEAR
GRY	GRAY
GRN	GREEN
ORG	ORANGE
RED	RED
VLT	VIOLET
WHT	WHITE
YEL	YELLOW

REV	DESCRIPTION	DATE	APPR.
1	ADDENDUM #1	07/17	TL

ADDENDA DRAWING
07-21-17

REFERENCE INFORMATION AND NOTES

DATE 07-21-17
DESIGN N. MORAR
DRAWN J. FORD
CHECKED A. TAILOR

ENGINEERING CERTIFICATION
REGISTERED PROFESSIONAL ENGINEER NAGIN MORAR No. C046564 CONTROL SYSTEMS STATE OF CALIFORNIA
07.21.2017
PROJECT ENGINEER DATE

Santa Clara Valley Water District

PROJECT NAME AND SHEET DESCRIPTION:
PACHECO CONDUIT INSPECTION AND REHABILITATION PROJECT
STANDARD SYMBOLS

SCALE: NOT TO SCALE
VERIFY SCALES 0 1"
BAR IS ONE INCH ON ORIGINAL DRAWING IF NOT ONE INCH THEN THIS SHEET, ADJUST SCALES ACCORDINGLY

PROJECT NUMBER: 91214001
SHEET CODE: 1 GE-03
SHEET NUMBER: 55.3 OF 55

USERNAME: Amirabde 7/19/2017 4:33 PM
FILENAME: K:\Active Projects\MP-91214001\PACHECO PL REHAB PROJECT\SHEETS\ADDENDA 1\GE-03.dwg
DOCUMENT NUMBER: XXXX-X-0000-0000000.00

ABBREVIATIONS

GENERAL PROPOSE ABBREVIATIONS, OTHER THAN THOSE LISTED BELOW, CONFORM TO ANSI/ASME Y1.1

A	AMPERE
AC	ALTERNATING CURRENT
AF	AMPS–FRAME
AFF	ABOVE FINISHED FLOOR
AFG	ABOVE FINISHED GRADE
AIC	AVAILABLE INTERRUPTING CURRENT
ASD	ADJUSTABLE SPEED DRIVE
AT	AMPS–TRIP
ATS	AUTOMATIC TRANSFER SWITCH
AUTO	AUTOMATIC
AWG	AMERICAN WIRE GAUGE
BC	BARE COPPER
BCP	BACKUP CONTROL PANEL
BRKR	BREAKER
BSC	BARE STRANDED COPPER
C	CONDUIT
CAT	CATALOG
CB	CIRCUIT BREAKER
CKT	CIRCUIT
CO	CONDUIT ONLY
CONN	CONNECTED
CO	CONTROL PANEL
CPT	CONTROL POWER TRANSFORMER
CT	CURRENT TRANSFORMER
CU	COPPER
DDC	DIRECT DIGITAL CONTROL
DIA	DIAMETER
DISC	DISCONNECT
DISTRIB	DISTRIBUTION
DIV	DIVISION
DPDT	DOUBLE POLE,DOUBLE THROW
DS	DOOR SWITCH
DWG	DRAWING
(E)	EXISTING
EA	EACH
EF	EXHAUST FAN
ELECT	ELECTRICAL
ELEV	ELEVATION
EMERG	EMERGENCY
EQUIP	EQUIPMENT
EST	ESTIMATED
ETM	ELAPSED TIME METER
EXIST	EXISTING
FA	FIRE ALARM
FB	FEEDER BREAKER
FLA	FULL LOAD AMPS
FRP	FIBERGLASS REINFORCED PLASTIC
FS	FLOW SWITCH
FVR	FULL VOLTAGE REVERSING
FVNR	FULL VOLTAGE NON–RESERVING
GA	GAUGE
GEN	GENERATOR
GF	GROUND FAULT
GFCI	CIRCUIT INTERRUPTER GROUND
GFI	GROUND FAULT INTERRUPTER
GFT	GROUND FAULT TRIP
GFW	GROUND FAULT INTERRUPTER, WEATHER PROOF GROUND
HF	HIGH FLOW
HID	HIGH INTENSITY DISCHARGE
HOA	HAND–OFF–AUTOMATIC
HP	HORSEPOWER
HPF	HIGH POWER FACTOR
HPS	HIGH PRESSURE SODIUM
HVAC	HEATING, VENTILATION AND AIR CONDITIONING
HZ	HERTZ (CYCLES PER SECOND)
I	INSTANTANEOUS
IC	INTERRUPTING CAPACITY
IOR	I/O RACK
IR	INFRARED
ISR	INTRINSICALLY SAFE RELAY
IST	INSTANTANEOUS BREAKER TRIP
JB	JUNCTION BOX
KVA	KILOVOLTS
KVAR	KILOVOLT AMPERES
KW	KILOWATT
KWH	KILOWATT HOUR
LCL	LONG CONTINUOUS LOAD
LCP	LOCAL CONTROL PANEL
LES	LOCAL EMERGENCY STOP
LOR	LOCAL–OFF–REMOTE SWITCH
LOS	LOCK–OUT STOP PUSH BUTTON
LP	LIGHTING PANEL
LRA	LOCKED ROTOR AMPS
LS	LIMIT SWITCH
LSG	LONG TIME, SHORT TIME, GROUND FAULT TRIP ON CIRCUIT BREAKER
LTG	LIGHTING
LV	LOW VOLTAGE
MA	MILLIAMPERE
MAX	MAXIMUM
MCC	MOTOR CONTROL CENTER
MCE	MOTOR CONTROL EQUIPMENT
MCM	THOUSAND CIRCULAR MILS
MCP	MAIN CONTROL PANEL
MF	MEDIUM FLOW
MFGR	MANUFACTURER
MIC	MANUFACTURE'S I INTERCONNECTING CABLE
MIN	MINIMUM
MISC	MISCELLANEOUS
MLO	MAIN LUGS ONLY
MMI	MAN–MADE INTERFACE
MOV	MOTOR OPERATED VALVE
MPR	MOTOR PROTECTION RELAY
MSH	MOTOR SPACE HEATER
MTG	MOUNTING
MTS	MANUAL TRANSFER SWITCH
MV	MEDIUM VOLTAGE
(N)	NEW
NA	NOT APPLICABLE
NC	NORMALLY CLOSED
NEC	NATIONAL ELECTRICAL CODE
NEMA	NATIONAL ELECTRICAL MANUFACTURER'S ASSOCIATION
NIC	NOT IN CONTRACT
N/P	NAMEPLATE
O/C	(OPEN/CLOSE STATUS)
OC	ON CENTER
OD	OUTSIDE DIAMETER
P	POLE
PCP	PUMP CONTROL PANEL
PF	POWER FACTOR
PFR	POWER FAIL RELAY
PH	PHASE
PLC	PROGRAMMABLE LOGIC CONTROLLER
PMAP	PUMP MOTOR ASSESSMENT PANEL
PNL	PANEL
POC	POINT OF CONNECTION
PPP	PACHECO PUMP PLANT
PT	POTENTIAL TRANSFORMER
PVC	POLY VINYL CHLORIDE
PWR	POWER
RECEPT	RECEPTACLE
RGS	RIGID GALVANIZED STEEL
RMS	ROOT MEAN SQUARE
RTD	RESISTANCE TEMPERATURE DEVICE
RVAT	REDUCED VOLTAGE AUTO–TRANSFORMER
RVSS	REDUCED VOLTAGE SOLID STATE
SA	SURGE ARRESTER
SD	SHUTDOWN
SM	SURFACE MOUNT
SPDT	SINGLE POLE, DOUBLE THROW
SPECS	SPECIFICATIONS
SPST	SINGLE POLE, SINGLE THROW
SSCC	STATION SERVICE CONTROL CENTER
SST	STAINLESS STEEL
ST	SHORT TIME
STP	SHIELDED TWISTED PAIR
SWBD	SWITCHBOARD
SWGR	SWITCHGEAR
SYMM	SYMMETRICAL
TB	TEST BLOCK
TDR	TIME DELAY RELAY
TEL	TELEPHONE
THWN	THERM PLASTIC, HEAT RESISTANT, WATERPROOF, NYLON COATED
TRANSF	TRANSFORMER
TS	TEMPERATURE SWITCH
TSP	TWISTED SHIELDED PAIR
TTB	TELEPHONE TERMINAL BACKBOARD
TVSS	TRANSIENT VOLTAGE SURGE SUPPRESSOR
TYP	TYPICAL
UCP	UNIT CONTROL PANEL
UG	UNDERGROUND
UL	UNDERWRITERS LABS
UNO	UNLESS NOTED OTHERWISE
UTP	UNSHIELDED TWISTED PAIR
V	VOLTS
VA	VOLT AMPS
VAC	VOLTAGE AC
VD	VOLTAGE DROP
VDC	VOLTS DC
VFD	VARIABLE FREQUENCY DRIVE
VIB	VIBRATION SYSTEM
VM	VOLTMETER
VSH	VIBRATION SWITCH, HIGH(WARNING)
VSHH	VIBRATION SWITCH, HIGH HIGH(SHUTDOWN)
VR	VOLTAGE REGULATOR
W	WIRE/WATTS
WAPA	WESTERN AREA POWER ADMINISTRATION
WP	WEATHERPROOF
WT	WATERTIGHT
WTH	WEATHER STATION
XFMR	TRANSFORMER
Z	IMPEDANCE
3P	THREE POLE
3W	THREE WIRE
4W	FOUR WIRE
#	POUND, NUMBER

NOTE:

1. THIS DRAWING CONTAINS STANDARD SYMBOLS AND ABBREVIATIONS. NOT ALL SYMBOLS AND ABBREVIATIONS SHOWN ARE USED ON THIS PROJECT.

ELECTRICAL SYMBOLS

SINGLE LINE DIAGRAMS

M	UTILITY METERING
GFI	GROUND FAULT INTERRUPTER
	CURRENT TRANSFORMER
	POWER TRANSFORMER
	CONTROL TRANSFORMER
A/P	CIRCUIT BREAKER, WITH AMP/POLE RATING
	SOLID–STATE, REDUCED VOLTAGE MOTOR STARTER WITH FULL–SPEED BY–PASS CONTACTOR
	ADJUSTABLE SPEED DRIVE
RV 1	MAGNETIC MOTOR STATER. "1" INDICATES SIZE 1. RV INDICATES REDUCED VOLTAGE. 2S INDICATES 2 SPEED. R INDICATES REVERSING, PW INDICATES PART WINDING.
	COMBINATION MAGNETIC MOTOR STARTER
	FUSABLE DISCONNECT
	MAGNETIC CONTACTOR
	DISCONNECT SWITCH, HEAVY DUTY, RATED 30 AN\MP, 600 VOLT, 3 POLE, NON–FUSED, UNO
	CONTROL STATION. PUSH–BUTTON STATION OR SELECTOR SWITCH. SEE CONTROL WIRING DIAGRAMS FOR REQUIREMENTS
	AUTOMATIC TRANSFER SWITCH, RATING AS INDICATED.
	STANDBY GENERATOR
PM	POWER METER/MONITOR
12	CONDUIT NUMBER 12. SEE CONDUIT AND WIRING SCHEDULE FOR SIZES AND QUANTITIES OF CONDUIT AND WIRES.
	GROUND
LA	LA=LIGHTNING ARRESTER SA=SURGE ARRESTER
	SPECIAL PURPOSE RECEPTACLE, RATING AS INDICATED.
	HASH MARKS INDICATE REMOVAL OR RELOCATION
1	INDICATES TO REFER TO NOTE 1 ON DRAWING
K	KIRK KEY MECHANICAL INTERLOCK SYSTEM
52 400A	MEDIUM VOLTAGE, DRAWOUT CIRCUIT BREAKER

REV	DESCRIPTION	DATE	APPR.	REFERENCE INFORMATION AND NOTES
1	ADDENDUM #1	07/17	TL	

ADDENDA DRAWING
07-21-17

DATE 07–21–17
DESIGN A. SAINI
DRAWN J. FORD
CHECKED A. TAILOR

ENGINEERING CERTIFICATION
REGISTERED PROFESSIONAL ENGINEER — ANAND P. S. SAINI — No. E 17001 — ELECTRICAL — STATE OF CALIFORNIA
07.21.2017
PROJECT ENGINEER DATE

Santa Clara Valley Water District

PROJECT NAME AND SHEET DESCRIPTION:
PACHECO CONDUIT INSPECTION AND REHABILITATION PROJECT
ELECTRICAL SYMBOLS AND ABBREVIATIONS

SCALE: NOT TO SCALE
VERIFY SCALES: 0 — 1"
BAR IS ONE INCH ON ORIGINAL DRAWING IF NOT ONE INCH ON THIS SHEET, ADJUST SCALES ACCORDINGLY

PROJECT NUMBER: 91214001
SHEET CODE: 1 GE–04
SHEET NUMBER: 55.4 OF 55

USERNAME: Amirabde 7/19/2017 4:33 PM
FILENAME: K:\Active Projects\MP-91214001\PACHECO PL REHAB PROJECT\SHEETS\ADDENDA 1\GE-04.dwg

DOCUMENT NUMBER: XXXX–X–0000–0000000.00

FIELD OR AS NOTED

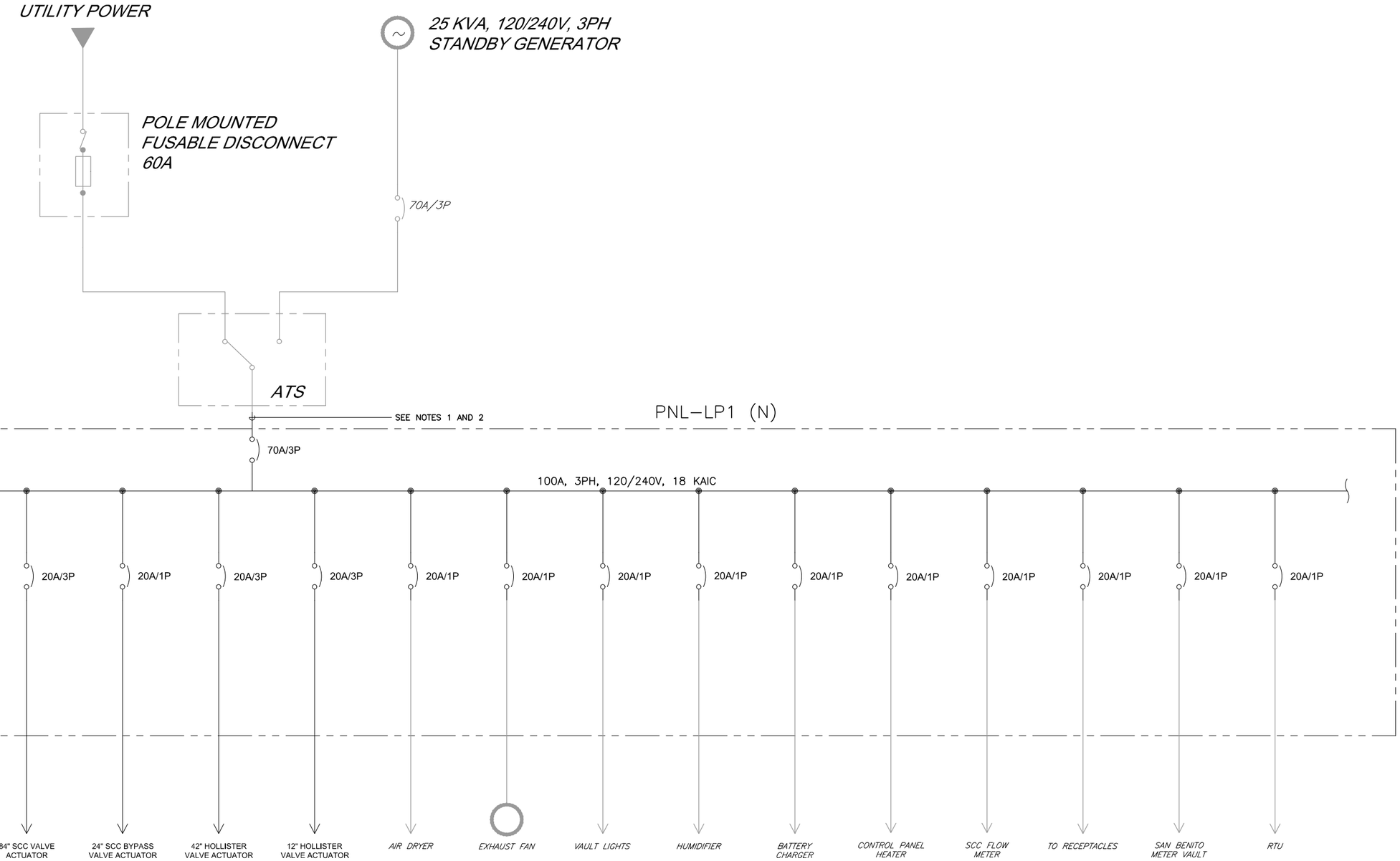

NOTES:

1. REPLACE EXISTING CONDUCTORS WITH NEW #4, XHHW-2 CONDUCTORS.
2. LOCATE THE PULLBOX BETWEEN ATS AND PNL-LP1 AND SEAL CONDUITS FOR ANY WATER INTRUSION.

REV	DESCRIPTION	DATE	APPR.
1	ADDENDUM #1	07/17	TL

ADDENDA DRAWING
07-21-17

REFERENCE INFORMATION AND NOTES

DATE 07-21-17
DESIGN A. SAINI
DRAWN J. FORD
CHECKED A. TAILOR

ENGINEERING CERTIFICATION
REGISTERED PROFESSIONAL ENGINEER ANANDEEP S. SAINI No. 17000 ELECTRICAL STATE OF CALIFORNIA
07.21.2017
PROJECT ENGINEER DATE

Santa Clara Valley Water District

PROJECT NAME AND SHEET DESCRIPTION:
PACHECO CONDUIT INSPECTION AND REHABILITATION PROJECT
BIF SINGLE LINE DIAGRAM

SCALE: NOT TO SCALE
VERIFY SCALES: 0 1"
BAR IS ONE INCH ON ORIGINAL DRAWING IF NOT ONE INCH ON THIS SHEET, ADJUST SCALES ACCORDINGLY

PROJECT NUMBER: 91214001
SHEET CODE: 1 GE-05
SHEET NUMBER: 55.5 OF 55

DOCUMENT NUMBER: XXXX-X-0000-0000000.00

USERNAME: Patrkey 7/19/2017 4:33 PM
FILENAME: K:\Active Projects\MP-91214001\PACHECO PL REHAB PROJECT\SHEETS\ADDENDA 1\GE-05.dwg

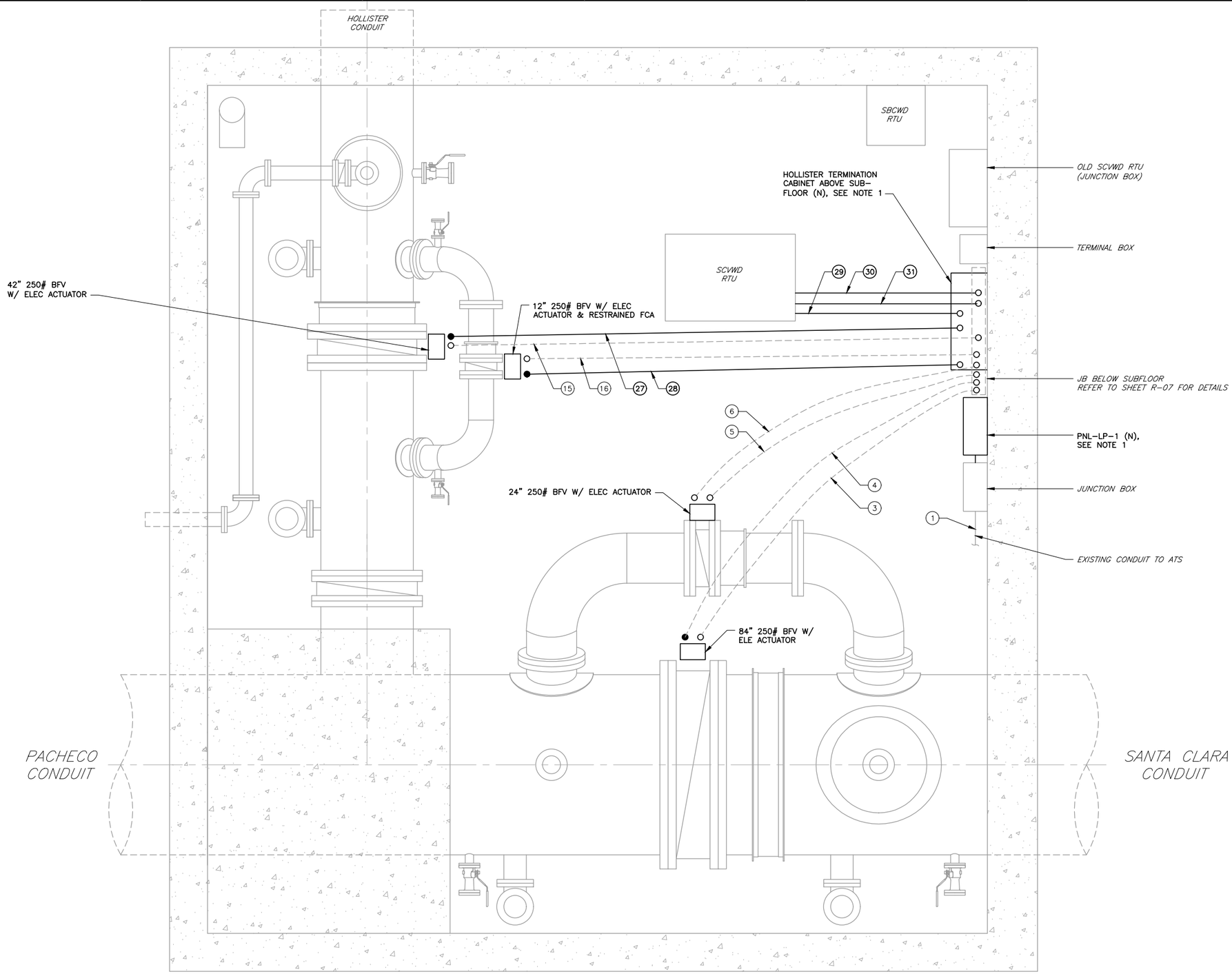

REV	DESCRIPTION	DATE	APPR.
1	ADDENDUM #1	07/17	TL

ADDENDA DRAWING
07-21-17

REFERENCE INFORMATION AND NOTES

1. REMOVE AND REPLACE THE PANEL AS SPECIFIED.
2. SEE SHEET GE-07 FOR CONDUIT AND WIRE SCHEDULE.

DATE
07-21-17
DESIGN
A. SAINI
DRAWN
J. FORD
CHECKED
A. TAILOR

ENGINEERING CERTIFICATION

REGISTERED PROFESSIONAL ENGINEER — PRABHDEEP S. SAINI — No. 31[illegible] — ELECTRICAL — STATE OF CALIFORNIA

07.21.2017
PROJECT ENGINEER DATE

Santa Clara Valley Water District

PROJECT NAME AND SHEET DESCRIPTION:

PACHECO CONDUIT INSPECTION AND REHABILITATION PROJECT

BIF VAULT CONDUIT LAYOUT

SCALE: NOT TO SCALE

VERIFY SCALES: 0 — 1"
BAR IS ONE INCH ON ORIGINAL DRAWING. IF NOT ONE INCH ON THIS SHEET, ADJUST SCALES ACCORDINGLY

PROJECT NUMBER: 91214001

SHEET CODE: 1 GE-06

SHEET NUMBER: 55.6 OF 55

DOCUMENT NUMBER: XXXX-X-0000-000000.00

USERNAME: Patrkey 7/19/2017 4:33 PM
FILENAME: K:\Active Projects\MP-91214001\PACHECO PL REHAB PROJECT\SHEETS\ADDENDA 1\GE-06.dwg

CONDUIT AND WIRE SCHEDULE

NO	CONDUIT SIZE	CONDUIT E/N	CONDUCTORS	PURPOSE	NOTES
1	1 1/2"	E	4, #4	INCOMING POWER	REPLACE EXISTING CONDUCTORS, HOMERUN ATS TO PNL-LP-1
3	3/4"	E	4, #12	POWER TO 84" SANTA CLARA VALVE	REPLACE EXISTING CONDUCTORS, ACTUATOR TO LP-1
4	1"	E	14, #14 1, 1 PAIR #16 TSC	CONTROL WIRING TO 84" SANTA CLARA VALVE	REPLACE EXISTING CONDUCTORS, ACTUATOR TO JB
5	3/4"	E	4, #12	POWER TO 24" SANTA CLARA VALVE	REPLACE EXISTING CONDUCTORS, HOMERUN
6	1"	E	14, #14 1, 1 PAIR #16 TSC	CONTROL WIRING TO 24" SANTA CLARA VALVE	REPLACE EXISTING CONDUCTORS, ACTUATOR TO JB
15	3/4"	E	4, #12	POWER TO 42" HOLLISTER VALVE ACTUATOR	REPLACE EXISTING CONDUCTORS, HOMERUN
16	3/4"	E	4, #12	POWER TO 12" HOLLISTER VALVE ACTUATOR	REPLACE EXISTING CONDUCTORS, HOMERUN
27	1"	N	16, #14 1, 1 PAIR #16 TSC	42" HOLLISTER VALVE ACTUATOR CONTROLS TO RTU	NEW CONDUIT AND CONTROL CONDUCTORS
28	1"	N	16, #14 1, 1 PAIR #16 TSC	12" HOLLISTER VALVE ACTUATOR CONTROLS TO RTU	NEW CONDUIT AND CONTROL CONDUCTORS
29	1"	N	14, #14 1, 1 PAIR #16 TSC	CONTROL WIRING TO 84" SANTA CLARA VALVE	JB TO SCVWD RTU, CONTINUE FROM CONDUIT #4, NO SPLICE
30	1"	N	14, #14 1, 1 PAIR #16 TSC	CONTROL WIRING TO 24" SANTA CLARA VALVE	JB TO SCVWD RTU, CONTINUE FROM CONDUIT #6, NO SPLICE
31	1 1/2"	N	28, #14 2, 1 PAIR #16 TSC	CONTROL WIRING	HOLLISTER TERMINATION CABINET TO SCVWD RTU

E – EXISTING
N – NEW

REV	DESCRIPTION	DATE	APPR.
1	ADDENDUM #1	07/17	TL

ADDENDA DRAWING
07-21-17

REFERENCE INFORMATION AND NOTES

DATE 07-21-17
DESIGN A. SAINI
DRAWN J. FORD
CHECKED A. TAILOR

ENGINEERING CERTIFICATION
REGISTERED PROFESSIONAL ENGINEER — ANAND P. S. SAINI — No. E-20[illegible] — ELECTRICAL — STATE OF CALIFORNIA
07.21.2017
PROJECT ENGINEER DATE

Santa Clara Valley Water District

PROJECT NAME AND SHEET DESCRIPTION:
PACHECO CONDUIT INSPECTION AND REHABILITATION PROJECT
BIF CONDUIT AND WIRE SCHEDULE

SCALE: NOT TO SCALE
VERIFY SCALES: 0 — 1"
BAR IS ONE INCH ON ORIGINAL DRAWING IF NOT ONE INCH ON THIS SHEET, ADJUST SCALES ACCORDINGLY

PROJECT NUMBER: 91214001
SHEET CODE: 1 GE-07
SHEET NUMBER: 55.2 OF 55

USERNAME: JENNFORD 7/19/2017-4:33 PM
FILENAME: K:\Active Projects\MP-91214001\PACHECO PL REHAB PROJECT\SHEETS\ADDENDA 1\GE-07.dwg
DOCUMENT NUMBER: XXXX-X-0000-0000000.00

USERNAME: Jennford 7/19/2017 4:33 PM
FILENAME: K:\Active Projects\MP-91214001\PACHECO PL REHAB PROJECT\SHEETS\ADDENDA 1\GE-08.dwg

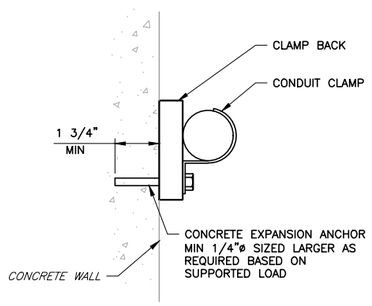

DETAIL 1 SINGLE CONDUIT MOUNTING

SCALE: NTS

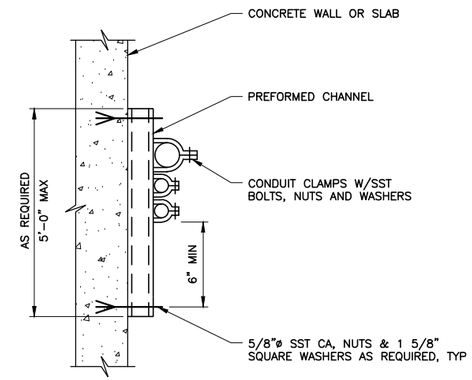

ELEVATION

NOTES:

1. THIS DETAIL TYPICAL FOR BOTH VERTICAL AND HORIZONTAL MOUNTING.
2. PROVIDE PREFORMED CHANNEL, FITTINGS, AND CLAMPS WITH MATERIALS AS SPECIFIED IN ARTICLE 25.08. FIELD COAT ALL CUTS PER SPECIFICATIONS.
3. CHANNELS TO BE SPACED AT 5'-0" OC MAXIMUM.

DETAIL 2 CONDUIT SUPPORT

SCALE: NTS

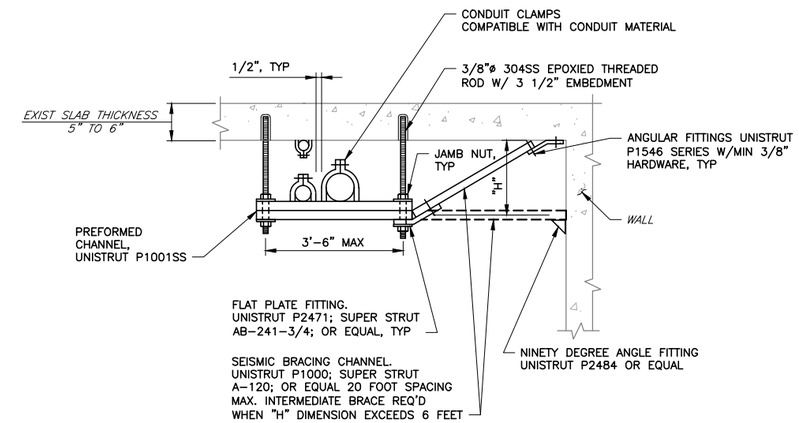

NOTES:

1. PREFORMED CHANNEL AND OTHER ACCESSORIES SHALL BE 304 OR 316 STL.
2. MAXIMUM SPACING OF SUPPORT 4'-0".
3. ADHESIVE FOR 304SS THREADED ROD SHALL BE HILTI HVA SYSTEM, OR EQUAL.

DETAIL 3 TRAPEZE CONDUIT SUPPORT

SCALE: NTS

REV	DESCRIPTION	DATE	APPR.	REFERENCE INFORMATION AND NOTES
1	ADDENDUM #1	07/17	TL	

ADDENDA DRAWING
07-21-17

DATE	07-21-17
DESIGN	A. SAINI
DRAWN	J. FORD
CHECKED	A. TAILOR

ENGINEERING CERTIFICATION

REGISTERED PROFESSIONAL ENGINEER — AMANDEEP S. SAINI — No. E17980 — ELECTRICAL — STATE OF CALIFORNIA

07.21.2017

PROJECT ENGINEER DATE

Santa Clara Valley Water District

PROJECT NAME AND SHEET DESCRIPTION:

PACHECO CONDUIT INSPECTION AND REHABILITATION PROJECT

ELECTRICAL DETAILS

SCALE: NOT TO SCALE

VERIFY SCALES: 0 — 1"

BAR IS ONE INCH ON ORIGINAL DRAWING. IF NOT ONE INCH ON THIS SHEET, ADJUST SCALES ACCORDINGLY

PROJECT NUMBER: 91214001

SHEET CODE: 1

GE-08

SHEET NUMBER: 55.8 OF 55

DOCUMENT NUMBER: XXXX-X-0000-0000000.00

RTU CONTROL PANEL

FIELD OR AS NOTED

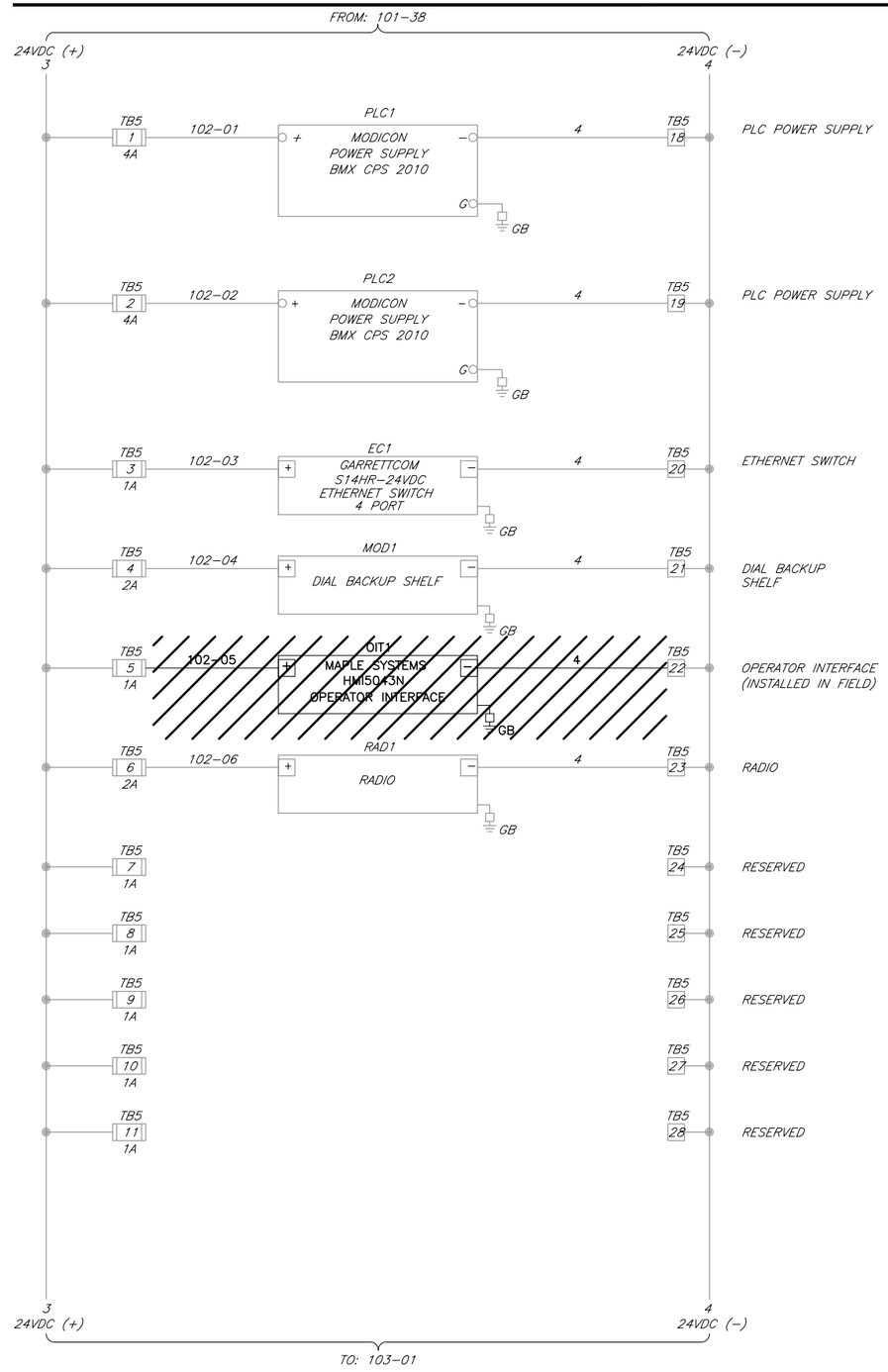

REV	DESCRIPTION	DATE	APPR.	REFERENCE INFORMATION AND NOTES
1	ADDENDUM #1	07/17	TL	

ADDENDA DRAWING
07-21-17

DATE 07-21-17
DESIGN N. MORAR
DRAWN A. ABDEL
CHECKED A. TAILOR

ENGINEERING CERTIFICATION
REGISTERED PROFESSIONAL ENGINEER NASIN MORAR No. C54054 CONTROL SYSTEMS STATE OF CALIFORNIA
07.21.2017
PROJECT ENGINEER DATE

Santa Clara Valley Water District

PROJECT NAME AND SHEET DESCRIPTION:

PACHECO CONDUIT INSPECTION AND REHABILITATION PROJECT

COMMON POWER CONTROL WIRING (DE-TERM)

SCALE: NOT TO SCALE
VERIFY SCALES: 0 1"
BAR IS ONE INCH ON ORIGINAL DRAWING IF NOT ONE INCH ADJUST THIS SHEET, ADJUST SCALES ACCORDINGLY

PROJECT NUMBER: 91214001

SHEET CODE: 1
ED-102

SHEET NUMBER: 55.3 OF 55

DOCUMENT NUMBER: XXXX-X-0000-0000000.00

USERNAME: Amirabde 7/19/2017 4:35 PM
FILENAME: K:\Active Projects\MP-91214001\PACHECO PL REHAB PROJECT\SHEETS\ADDENDA 1\ED-102.dwg

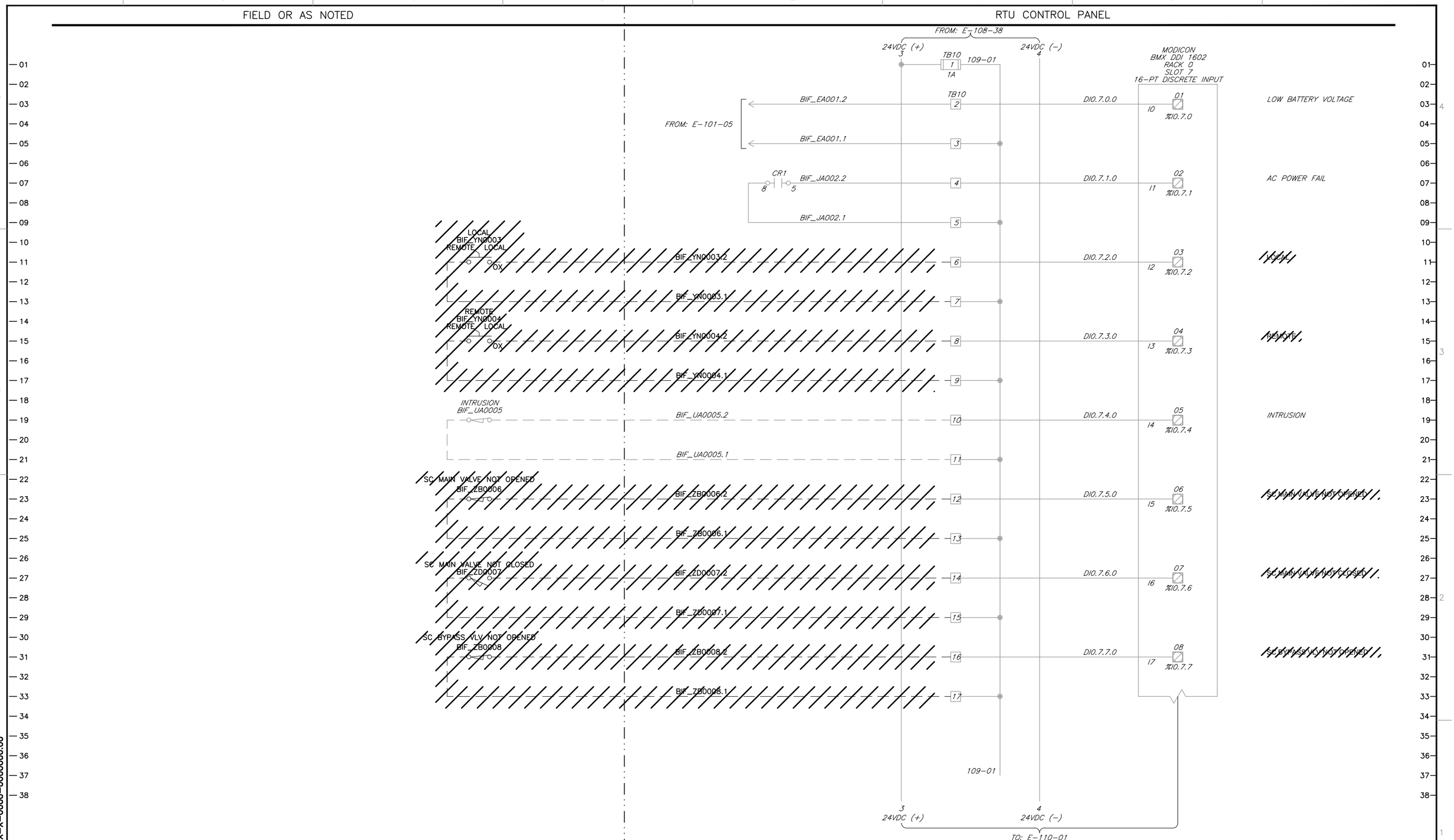

REV	DESCRIPTION	DATE	APPR.
1	ADDENDUM #1	07/17	TL

ADDENDA DRAWING
07-21-17

REFERENCE INFORMATION AND NOTES

DATE	07-21-17
DESIGN	N. MORAR
DRAWN	J. FORD
CHECKED	A. TAILOR

ENGINEERING CERTIFICATION
REGISTERED PROFESSIONAL ENGINEER — NASIN MORAR — No. C34064 — CONTROL SYSTEMS — STATE OF CALIFORNIA
07.21.2017
PROJECT ENGINEER DATE

Santa Clara Valley Water District

PROJECT NAME AND SHEET DESCRIPTION:

PACHECO CONDUIT INSPECTION AND REHABILITATION PROJECT

SLOT 7 – DISCRETE INPUT MODULE CONTROL WIRING (DE-TERM)

SCALE	PROJECT NUMBER
NOT TO SCALE	91214001

VERIFY SCALES
0 1"
BAR IS ONE INCH ON ORIGINAL DRAWING IF NOT ONE INCH ON THIS SHEET, ADJUST SCALES ACCORDINGLY

SHEET CODE: 1
ED-109

SHEET NUMBER: 55.10 OF 55

USERNAME: Amirabde 7/19/2017 4:35 PM
FILENAME: K:\Active Projects\MP-91214001\PACHECO PL REHAB PROJECT\SHEETS\ADDENDA 1\ED-109.dwg

DOCUMENT NUMBER: XXXX-X-0000-0000000.00

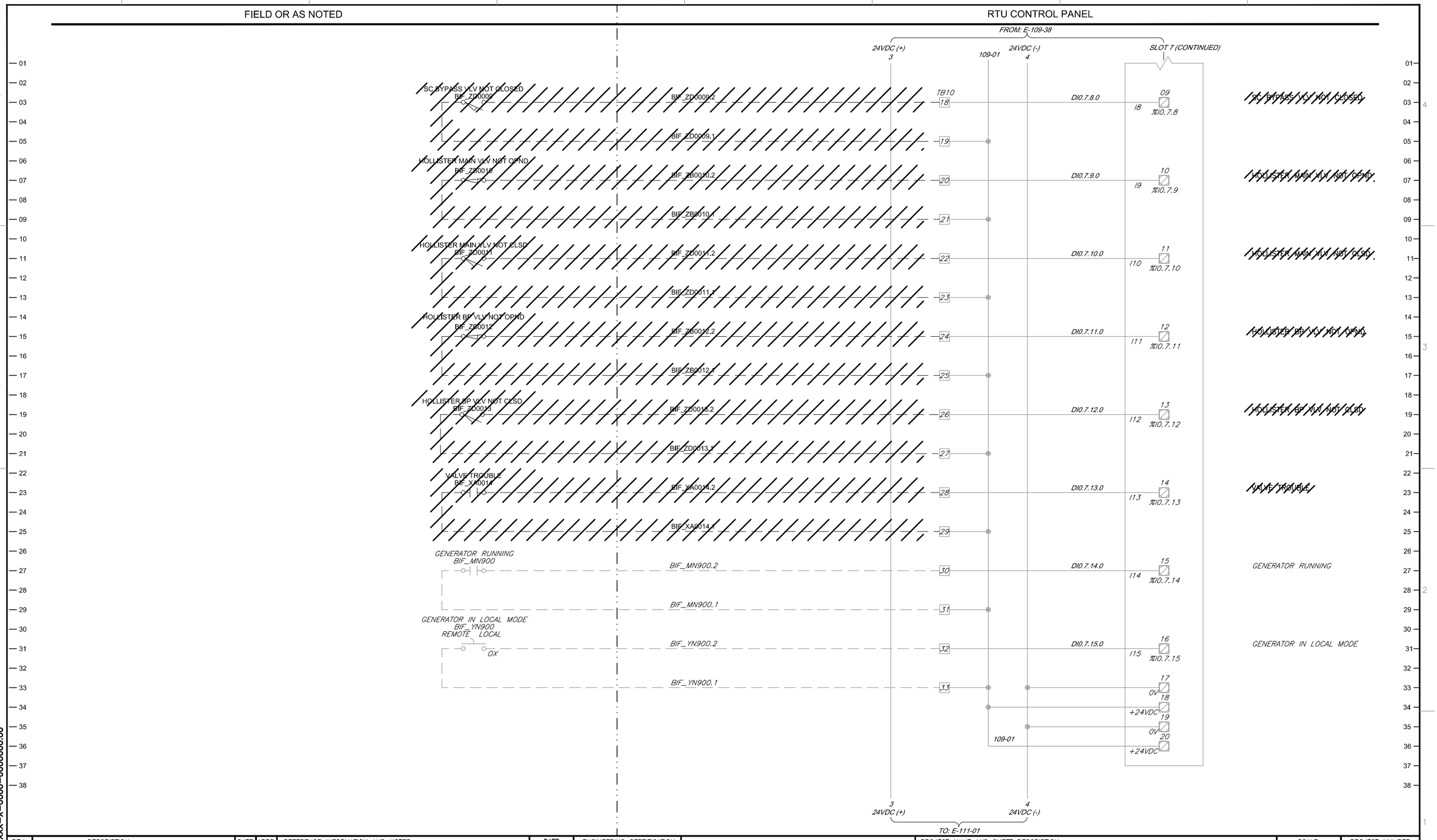

REV	DESCRIPTION	DATE	APPR.
1	ADDENDUM #1	07/17	TL

ADDENDA DRAWING
07-21-17

REFERENCE INFORMATION AND NOTES

DATE	07-21-17
DESIGN	N. MORAR
DRAWN	J. FORD
CHECKED	A. TAILOR

ENGINEERING CERTIFICATION
REGISTERED PROFESSIONAL ENGINEER NAGIN MORAR No. C46654 CONTROL SYSTEMS STATE OF CALIFORNIA
07.21.2017
PROJECT ENGINEER DATE

Santa Clara Valley Water District

PROJECT NAME AND SHEET DESCRIPTION:

PACHECO CONDUIT INSPECTION AND REHABILITATION PROJECT

SLOT 7 – DISCRETE INPUT MODULE CONTROL WIRING (DE-TERM)

SCALE	PROJECT NUMBER
NOT TO SCALE	91214001
VERIFY SCALES 0 1" BAR IS ONE INCH ON ORIGINAL DRAWING IF NOT ONE INCH ADJUST THIS SHEET, ADJUST SCALES ACCORDINGLY	SHEET CODE: 1 ED-110
	SHEET NUMBER: 55.11 OF 55

USERNAME: Amirabde 7/19/2017 4:35 PM
FILENAME: K:\Active Projects\MP-91214001\PACHECO PL REHAB PROJECT\SHEETS\ADDENDA 1\ED-110.dwg

DOCUMENT NUMBER: XXXX-X-0000-0000000.00

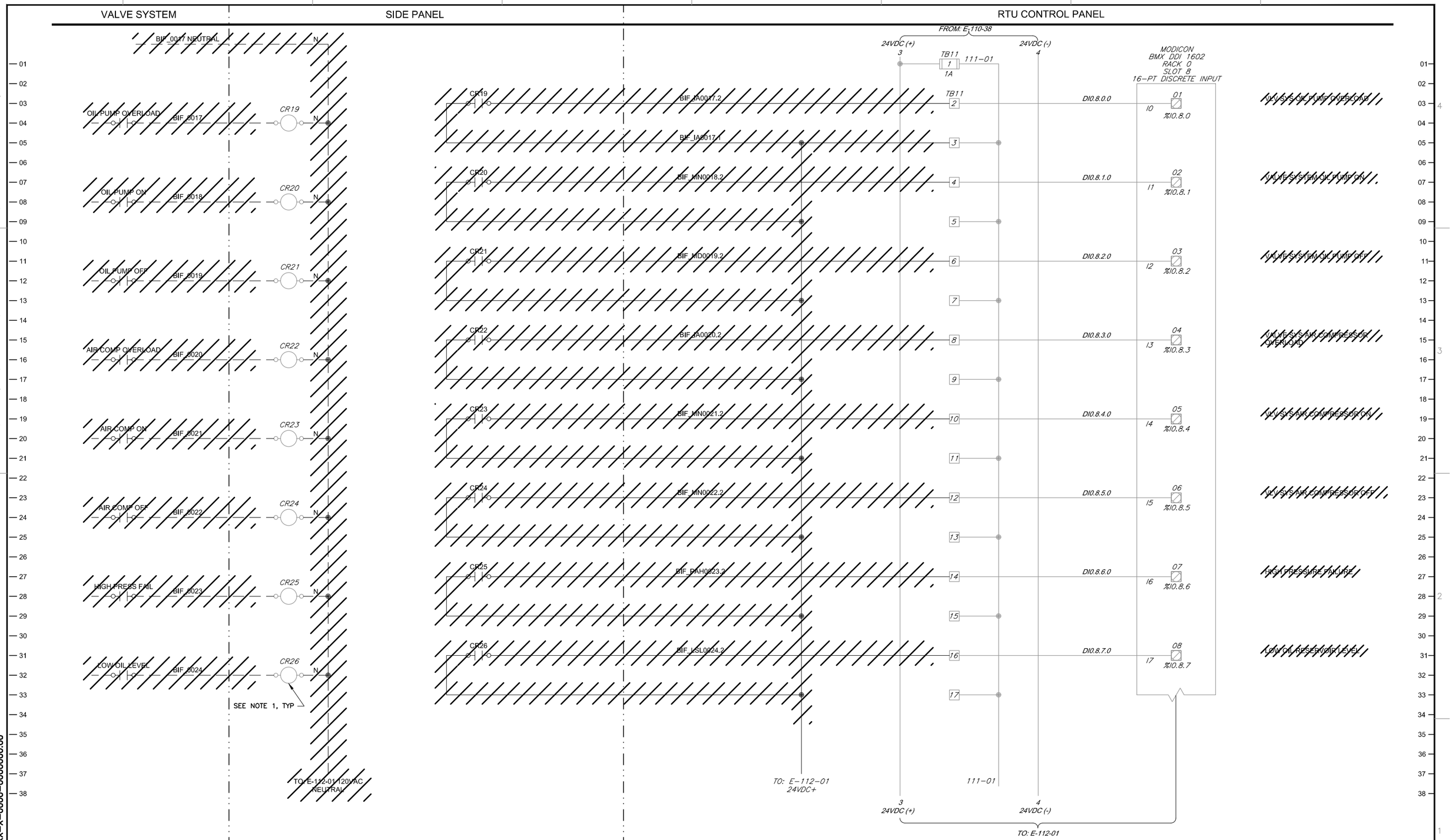

USERNAME: Amirabde 7/19/2017 4:35 PM
FILENAME: K:\Active Projects\MP-91214001\PACHECO PL REHAB PROJECT\SHEETS\ADDENDA 1\ED-111.dwg

DOCUMENT NUMBER: XXXX-X-0000-0000000.00

REV	DESCRIPTION	DATE	APPR.
1	ADDENDUM #1	07/17	TL

ADDENDA DRAWING
07-21-17

REFERENCE INFORMATION AND NOTES

1. REMOVE ALL WIRING FROM RELAYS CR19 THRU CR26 AND MARK AS SPARE.

DATE
07-21-17
DESIGN
N. MORAR
DRAWN
J. FORD
CHECKED
A. TAILOR

ENGINEERING CERTIFICATION

REGISTERED PROFESSIONAL ENGINEER — NAGIN MORAR — No. C046561 — CONTROL SYSTEMS — STATE OF CALIFORNIA

07.21.2017

PROJECT ENGINEER DATE

Santa Clara Valley Water District

PROJECT NAME AND SHEET DESCRIPTION:

PACHECO CONDUIT INSPECTION AND REHABILITATION PROJECT

SLOT 8 – DISCRETE INPUT MODULE CONTROL WIRING (DE-TERM)

SCALE	PROJECT NUMBER
NOT TO SCALE	91214001
VERIFY SCALES 0 1" BAR IS ONE INCH ON ORIGINAL DRAWING IF NOT ONE INCH, THEN ADJUST THIS SHEET, ADJUST SCALES ACCORDINGLY	SHEET CODE: 1 ED-111
	SHEET NUMBER: 55.12 OF 55

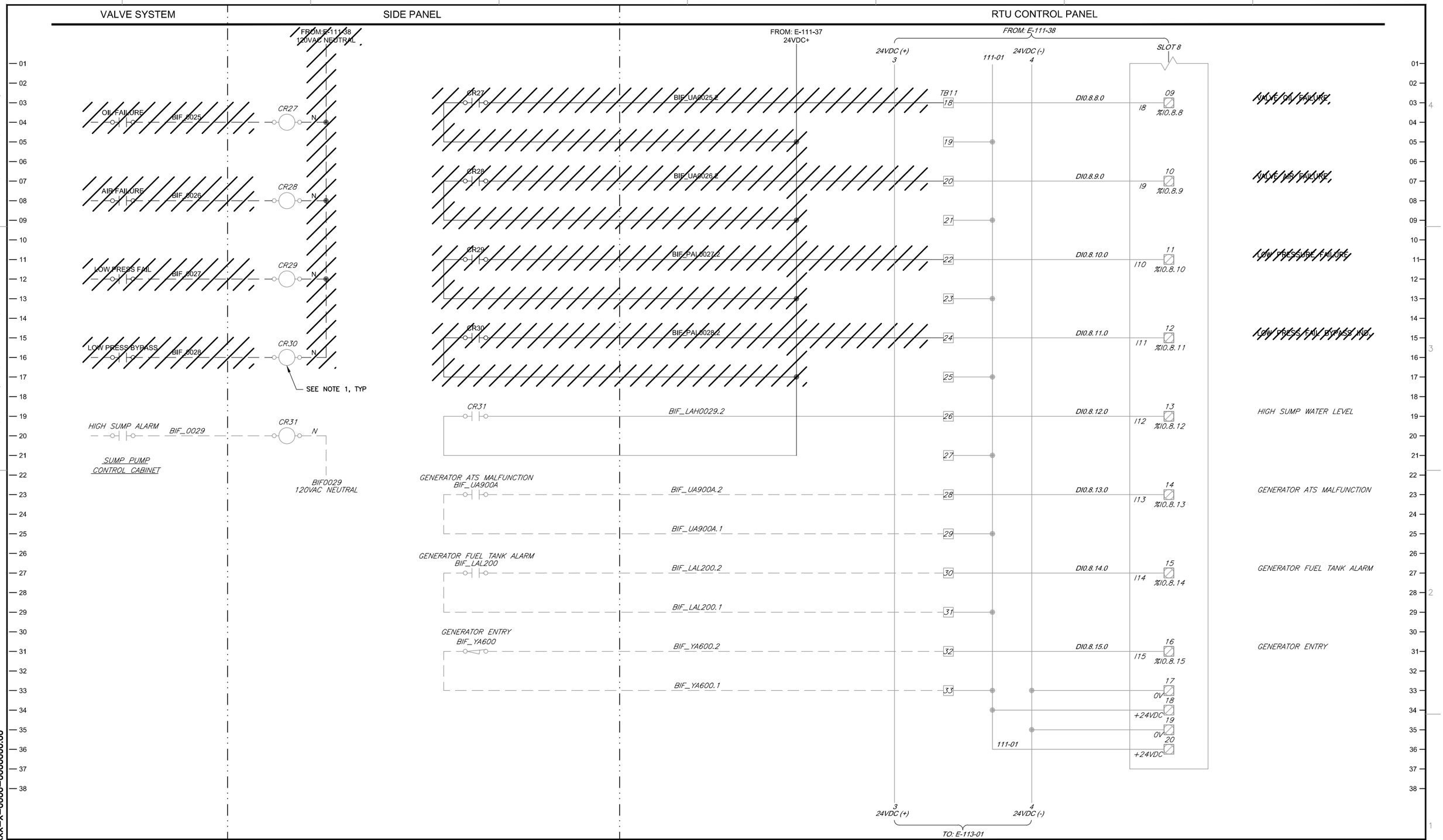

REV	DESCRIPTION	DATE	APPR.
1	ADDENDUM #1	07/17	TL

ADDENDA DRAWING
07-21-17

REFERENCE INFORMATION AND NOTES

1. REMOVE ALL WIRING FROM RELAYS CR27 THRU CR30 AND MARK AS SPARE.

DATE	
07-21-17	
DESIGN	N. MORAR
DRAWN	J. FORD
CHECKED	A. TAILOR

ENGINEERING CERTIFICATION

REGISTERED PROFESSIONAL ENGINEER NASIM MORAR No. C54054 CONTROL SYSTEMS STATE OF CALIFORNIA

07.21.2017

PROJECT ENGINEER DATE

Santa Clara Valley Water District

PROJECT NAME AND SHEET DESCRIPTION:

PACHECO CONDUIT INSPECTION AND REHABILITATION PROJECT

SLOT 8 – DISCRETE INPUT MODULE CONTROL WIRING (DE-TERM)

SCALE	PROJECT NUMBER
NOT TO SCALE	91214001

VERIFY SCALES 0 1"
BAR IS ONE INCH ON ORIGINAL DRAWING IF NOT ONE INCH ON THIS SHEET, ADJUST SCALES ACCORDINGLY

SHEET CODE: 1 ED-112

SHEET NUMBER: 55.13 OF 55

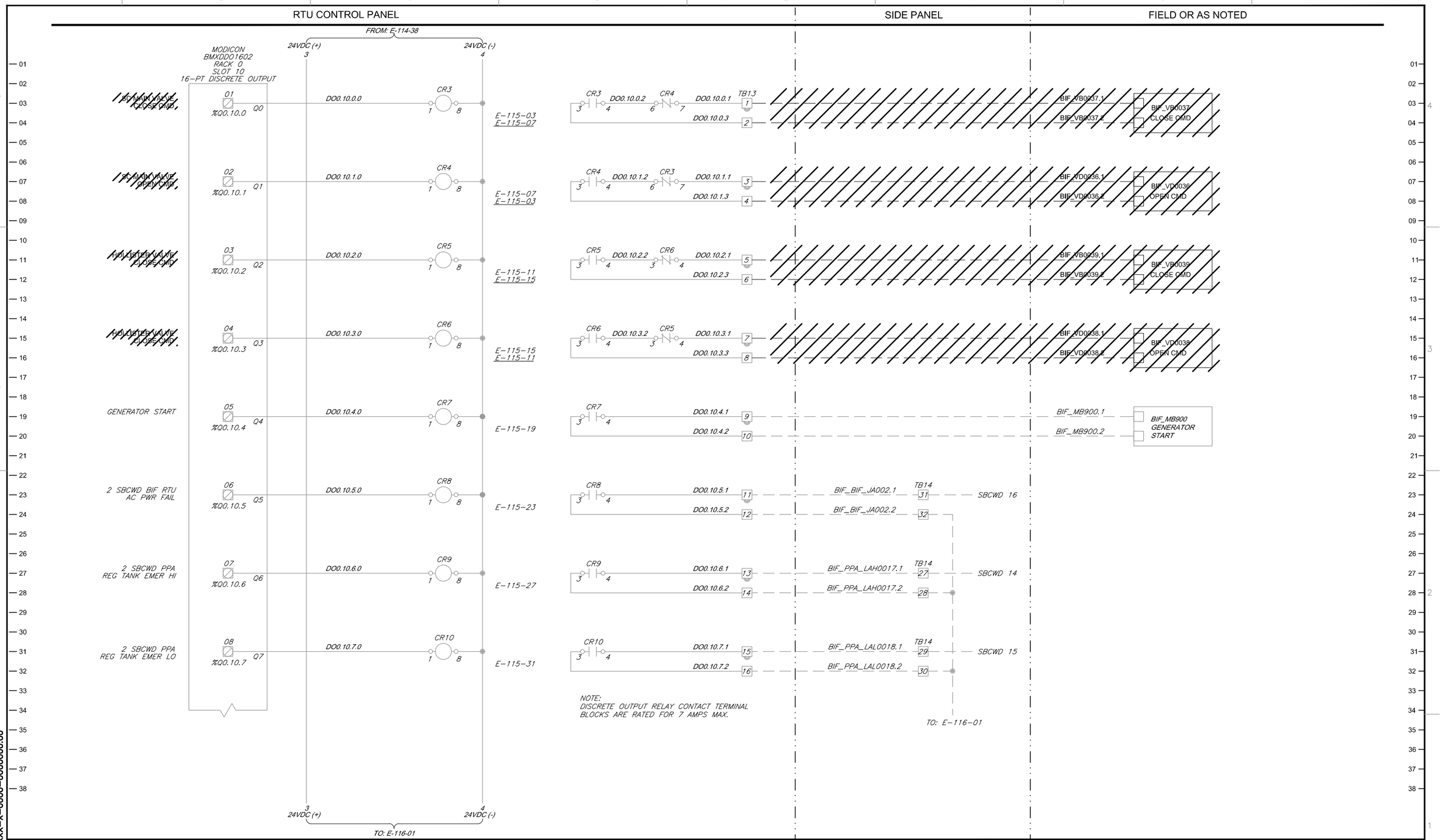

USERNAME: Amirabde 7/19/2017 4:35 PM
FILENAME: K:\Active Projects\MP-91214001\PACHECO PL REHAB PROJECT\SHEETS\ADDENDA 1\ED-115.dwg

DOCUMENT NUMBER: XXXX-X-0000-0000000.00

REV	DESCRIPTION	DATE	APPR.
1	ADDENDUM #1	07/17	TL

ADDENDA DRAWING
07-21-17

REFERENCE INFORMATION AND NOTES

DATE	
07-21-17	
DESIGN	N. MORAR
DRAWN	J. FORD
CHECKED	A. TAILOR

ENGINEERING CERTIFICATION
REGISTERED PROFESSIONAL ENGINEER NAGIN MORAR No. C046564 CONTROL SYSTEMS STATE OF CALIFORNIA
07.21.2017
PROJECT ENGINEER DATE

Santa Clara Valley Water District

PROJECT NAME AND SHEET DESCRIPTION:
PACHECO CONDUIT INSPECTION AND REHABILITATION PROJECT
SLOT 10 - DISCRETE OUTPUT MODULE CONTROL WIRING (DE-TERM)

SCALE: NOT TO SCALE
VERIFY SCALES 0 1"
BAR IS ONE INCH ON ORIGINAL DRAWING IF NOT ONE INCH, ADJUST THIS SHEET, ADJUST SCALES ACCORDINGLY

PROJECT NUMBER: 91214001
SHEET CODE: 1 ED-115
SHEET NUMBER: 55.14 OF 55

NAMEPLATE SCHEDULE			
TAG	LINE 1	LINE 2	LINE 3
1	PACHECO BIFERCATION	BIF-RTU	

PARTS LIST					
ITEM	DESCRIPTION	ITEM	DESCRIPTION	ITEM	DESCRIPTION
1	PLC	7	POWER SUPPLY/BACKUP BATTERY	13	RADIO AND MOUNTING BRACKET
2	CIRCUIT BREAKER	8	MEDIA CONVERTER/ETHERNET SWITCH	14	CABINET TEMPERATURE SENSOR
3	TERMINALS	9	FUSE CLASS CC	15	
4	FUSES	10	TEMPERATURE/CURRENT CONVERTER	16	THERMOSTAT
5	DC RELAY	11	V/I CONVERTER	17	ISOLATOR V/V
6	GROUND BAR	12	AC RELAY	18	ISOLATOR I/I

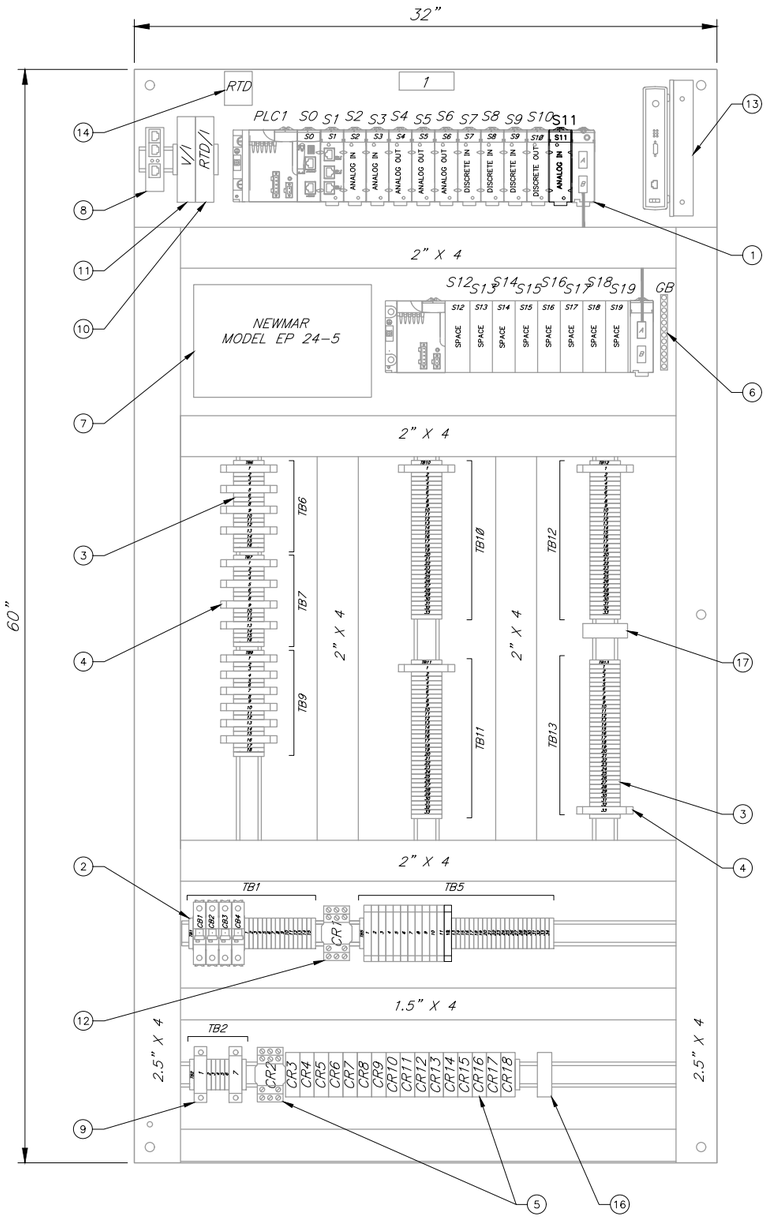

BACK PANEL

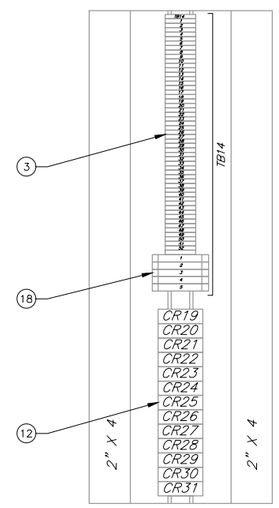

TB14
SIDE PANEL

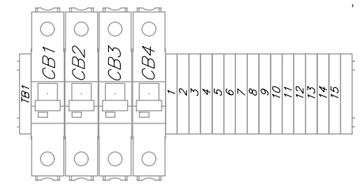

TB1
AC POWER DISTRIBUTION

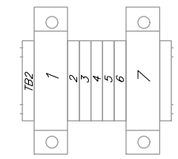

TB2
DC POWER DISTRIBUTION

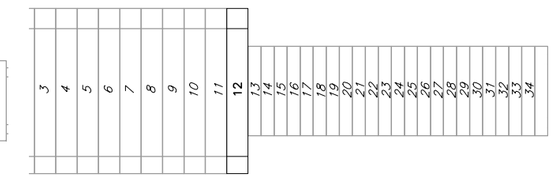

TB5
DC POWER DISTRIBUTION

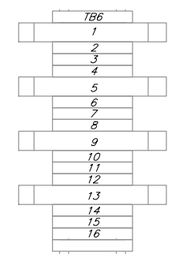

TB6
ANALOG INPUT MODULE

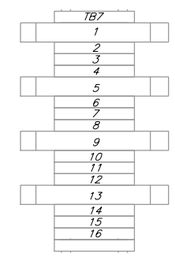

TB7
ANALOG INPUT MODULE

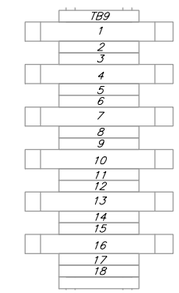

TB9
ANALOG OUTPUT MODULE

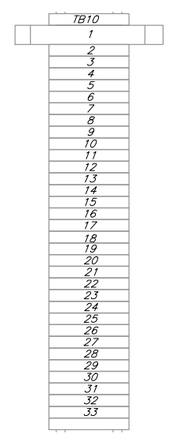

TB10
DISCRETE INPUT MODULE

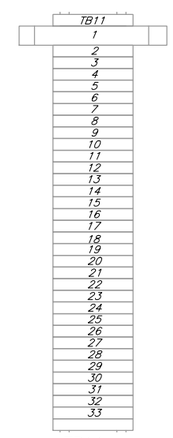

TB11
DISCRETE INPUT MODULE

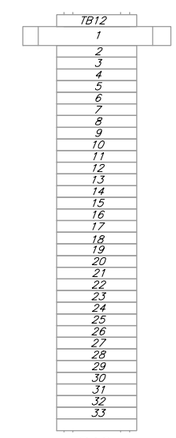

TB12
DISCRETE INPUT MODULE

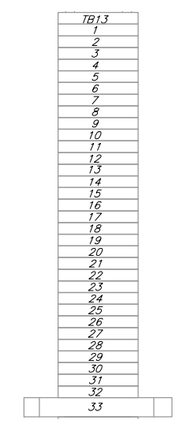

TB13
DISCRETE OUTPUT MODULE

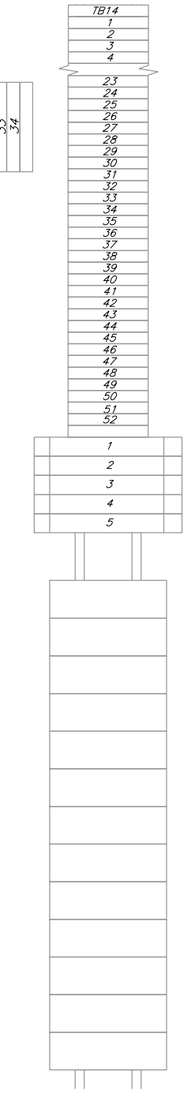

TB14
SIDE PANEL MODULES

NOTES:

1. SUB-PANEL IS A HOFFMAN A72P36F1.
2. SUB-PANEL FINISH IS WHITE PAINT.

TERMINAL DETAILS

REV	DESCRIPTION	DATE	APPR.	REFERENCE INFORMATION AND NOTES
1	ADDENDUM #1	07/17	TL	

ADDENDA DRAWING
07-21-17

DATE	07-21-17
DESIGN	N. MORAR
DRAWN	J. FORD
CHECKED	A. TAILOR

ENGINEERING CERTIFICATION

REGISTERED PROFESSIONAL ENGINEER — NASIN MORAR — No. C56056 — CONTROL SYSTEMS — STATE OF CALIFORNIA

07.21.2017

PROJECT ENGINEER DATE

Santa Clara Valley Water District

PROJECT NAME AND SHEET DESCRIPTION:

PACHECO CONDUIT INSPECTION AND REHABILITATION PROJECT

BACK PANEL LAYOUT

SCALE	PROJECT NUMBER
NOT TO SCALE	91214001
VERIFY SCALES 0 1" BAR IS ONE INCH ON ORIGINAL DRAWING IF NOT ONE INCH THEN ADJUST SCALES ACCORDINGLY	SHEET CODE: 1 E-001 SHEET NUMBER: 55 OF 55

USERNAME: Amirabde 7/19/2017 4:33 PM
FILENAME: K:\Active Projects\MP-91214001\PACHECO PL REHAB PROJECT\SHEETS\ADDENDA 1\E-001.dwg

DOCUMENT NUMBER: XXXX-X-0000-0000000.00

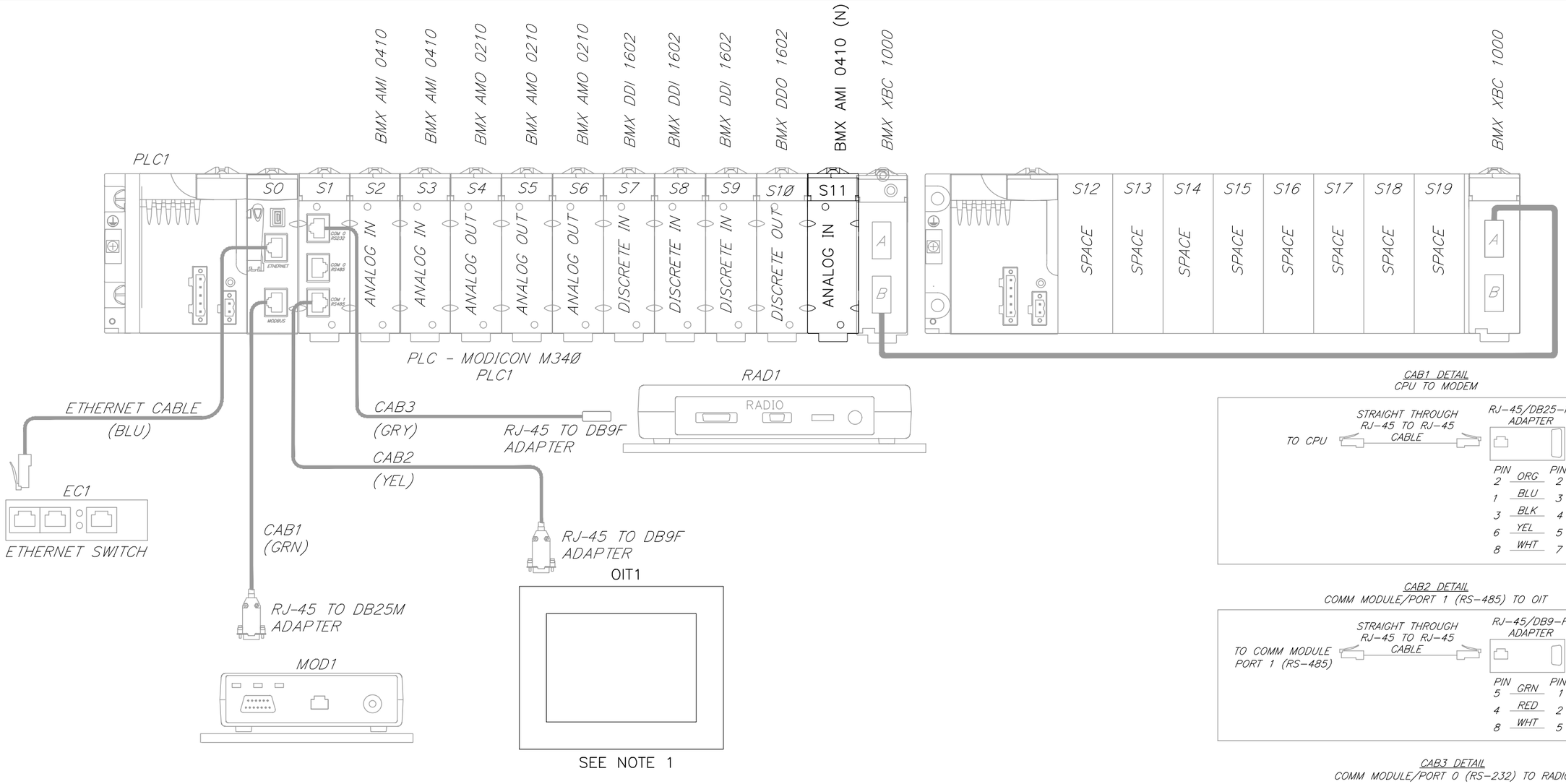

CAB1 DETAIL
CPU TO MODEM

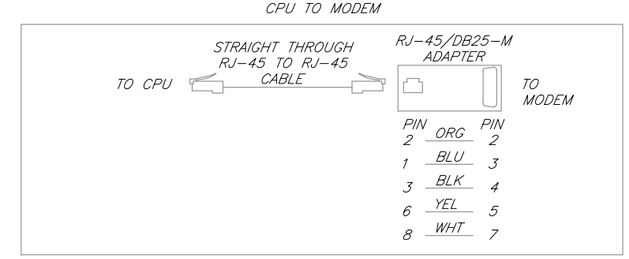

CAB2 DETAIL
COMM MODULE/PORT 1 (RS-485) TO OIT

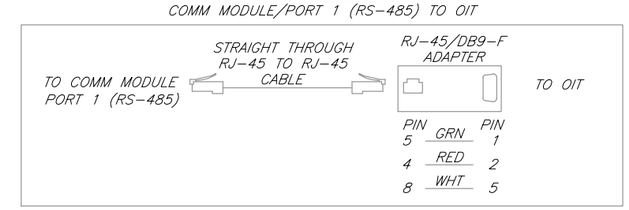

CAB3 DETAIL
COMM MODULE/PORT 0 (RS-232) TO RADIO

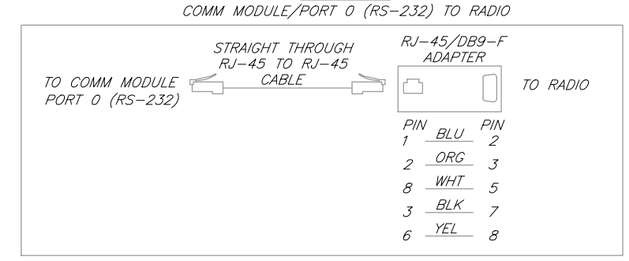

NOTES:

1. CONTRACTOR TO REPLACE EXISTING OIT1 W/ NEW MAPLE SYSTEMS HMI5100L.

REV	DESCRIPTION	DATE	APPR.	REFERENCE INFORMATION AND NOTES
1	ADDENDUM #1	07/17	TL	

ADDENDA DRAWING
07-21-17

DATE	07-21-17
DESIGN	N. MORAR
DRAWN	J. FORD
CHECKED	A. TAILOR

ENGINEERING CERTIFICATION

REGISTERED PROFESSIONAL ENGINEER NAGIN MORAR No. C-46156 CONTROL SYSTEMS STATE OF CALIFORNIA

07.21.2017
PROJECT ENGINEER DATE

Santa Clara Valley Water District

PROJECT NAME AND SHEET DESCRIPTION:

PACHECO CONDUIT INSPECTION AND REHABILITATION PROJECT

PLC DETAIL LAYOUT & CABLE CONNECTIONS

SCALE	PROJECT NUMBER
NOT TO SCALE	91214001
VERIFY SCALES 0 1" BAR IS ONE INCH ON ORIGINAL DRAWING IF NOT ONE INCH ADJUST THIS SHEET, ADJUST SCALES ACCORDINGLY	SHEET CODE: 1 E-002
	SHEET NUMBER: 55.16 OF 55

DOCUMENT NUMBER: XXXX-X-0000-0000000.00

USERNAME: Amirabde 7/19/2017 4:33 PM
FILENAME: K:\Active Projects\MP-91214001\PACHECO PL REHAB PROJECT\SHEETS\ADDENDA 1\E-002.dwg

RTU CONTROL PANEL

FIELD OR AS NOTED

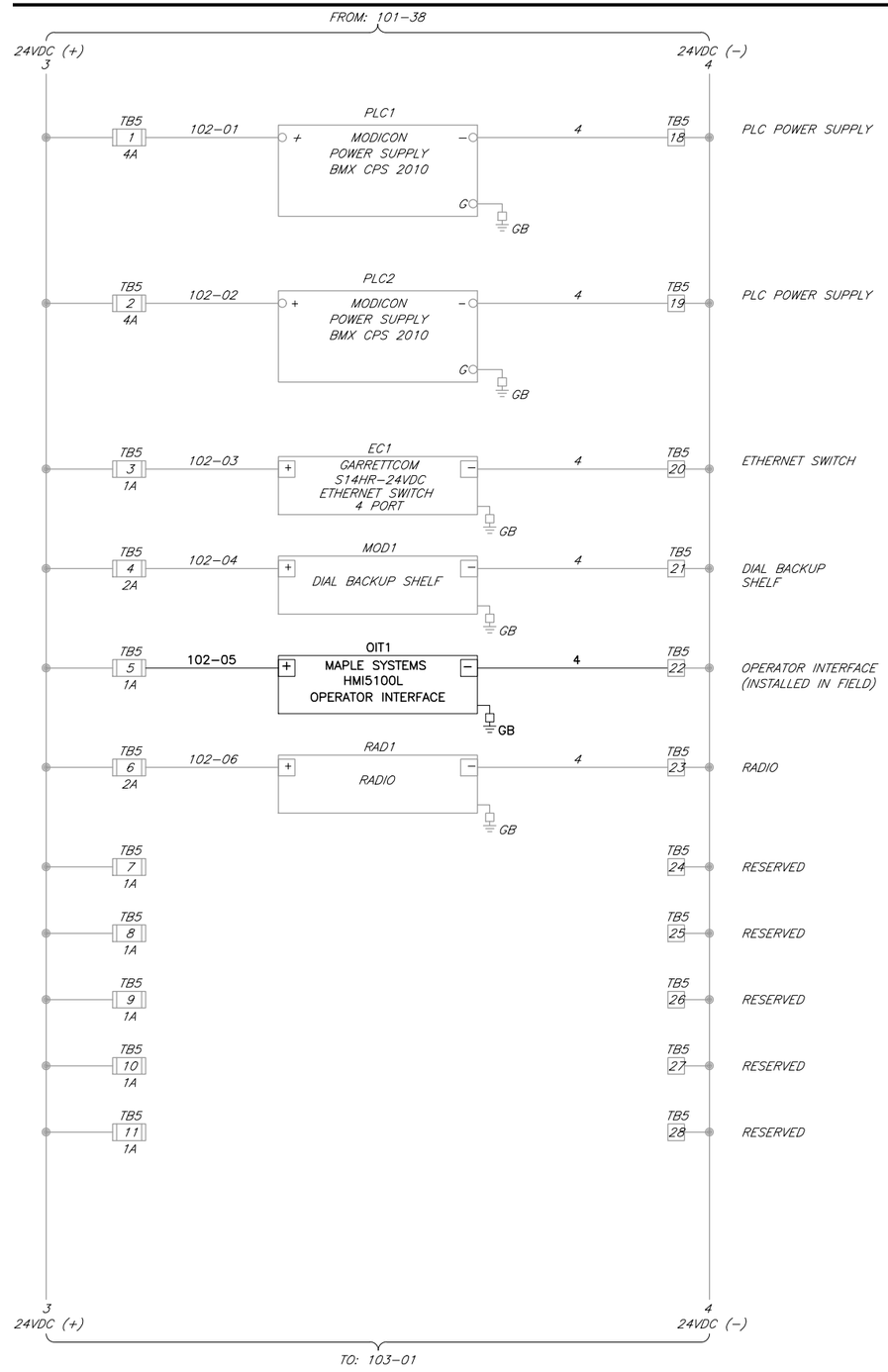

REV	DESCRIPTION	DATE	APPR.	REFERENCE INFORMATION AND NOTES
1	ADDENDUM #1	07/17	TL	

ADDENDA DRAWING
07-21-17

DATE	07-21-17
DESIGN	N. MORAR
DRAWN	A. ABDEL
CHECKED	A. TAILOR

ENGINEERING CERTIFICATION

REGISTERED PROFESSIONAL ENGINEER NASIN MORAR No. C54864 CONTROL SYSTEMS STATE OF CALIFORNIA

07.21.2017

PROJECT ENGINEER DATE

Santa Clara Valley Water District

PROJECT NAME AND SHEET DESCRIPTION:

PACHECO CONDUIT INSPECTION AND REHABILITATION PROJECT

COMMON POWER CONTROL WIRING

SCALE: NOT TO SCALE

VERIFY SCALES: 0 1"
BAR IS ONE INCH ON ORIGINAL DRAWING
IF NOT ONE INCH ON THIS SHEET, ADJUST SCALES ACCORDINGLY

PROJECT NUMBER: 91214001

SHEET CODE: 1

E-102

SHEET NUMBER: 55.17 OF 55

USERNAME: Amirabde 7/19/2017 4:34 PM
FILENAME: K:\Active Projects\MP-91214001\PACHECO PL REHAB PROJECT\SHEETS\ADDENDA 1\E-102.dwg

DOCUMENT NUMBER: XXXX-X-0000-0000000.00

RTU CONTROL PANEL | FIELD OR AS NOTED

FROM: E-102-38

24VDC (+) 3 | 24VDC (−) 4

02	TB5 12 (5A)	TO: E-118, E-119 & E-121	TB5 29 — 24 VDC POWER TO HOLLISTER TERMINATION CABINET
04	TB5 13		TB5 30 — SPARE
06	TB5 14		TB5 31 — SPARE
08	TB5 15		TB5 32 — SPARE
10	TB5 16		TB5 33 — SPARE
12	TB5 17		TB5 34 — SPARE

3 24VDC (+) | 4 24VDC (−)

TO: E-104-01

REV	DESCRIPTION	DATE	APPR.	REFERENCE INFORMATION AND NOTES
1	ADDENDUM #1	07/17	TL	

ADDENDA DRAWING
07-21-17

DATE 07-21-17
DESIGN N. MORAR
DRAWN J. FORD
CHECKED A. TAILOR

ENGINEERING CERTIFICATION
REGISTERED PROFESSIONAL ENGINEER — NAGIN MORAR — No. C-40154 — CONTROL SYSTEMS — STATE OF CALIFORNIA
07.21.2017
PROJECT ENGINEER DATE

Santa Clara Valley Water District

PROJECT NAME AND SHEET DESCRIPTION:
PACHECO CONDUIT INSPECTION AND REHABILITATION PROJECT
COMMON POWER CONTROL WIRING (CONTINUED)

SCALE: NOT TO SCALE
VERIFY SCALES: 0 — 1"
BAR IS ONE INCH ON ORIGINAL DRAWING. IF NOT ONE INCH ON THIS SHEET, ADJUST SCALES ACCORDINGLY

PROJECT NUMBER: 91214001
SHEET CODE: 1 E-103
SHEET NUMBER: 55.18 OF 55

USERNAME: Amirabde 7/19/2017 4:34 PM
FILENAME: K:\Active Projects\MP-91214001\PACHECO PL REHAB PROJECT\SHEETS\ADDENDA 1\E-103.dwg
DOCUMENT NUMBER: XXXX-X-0000-0000000.00

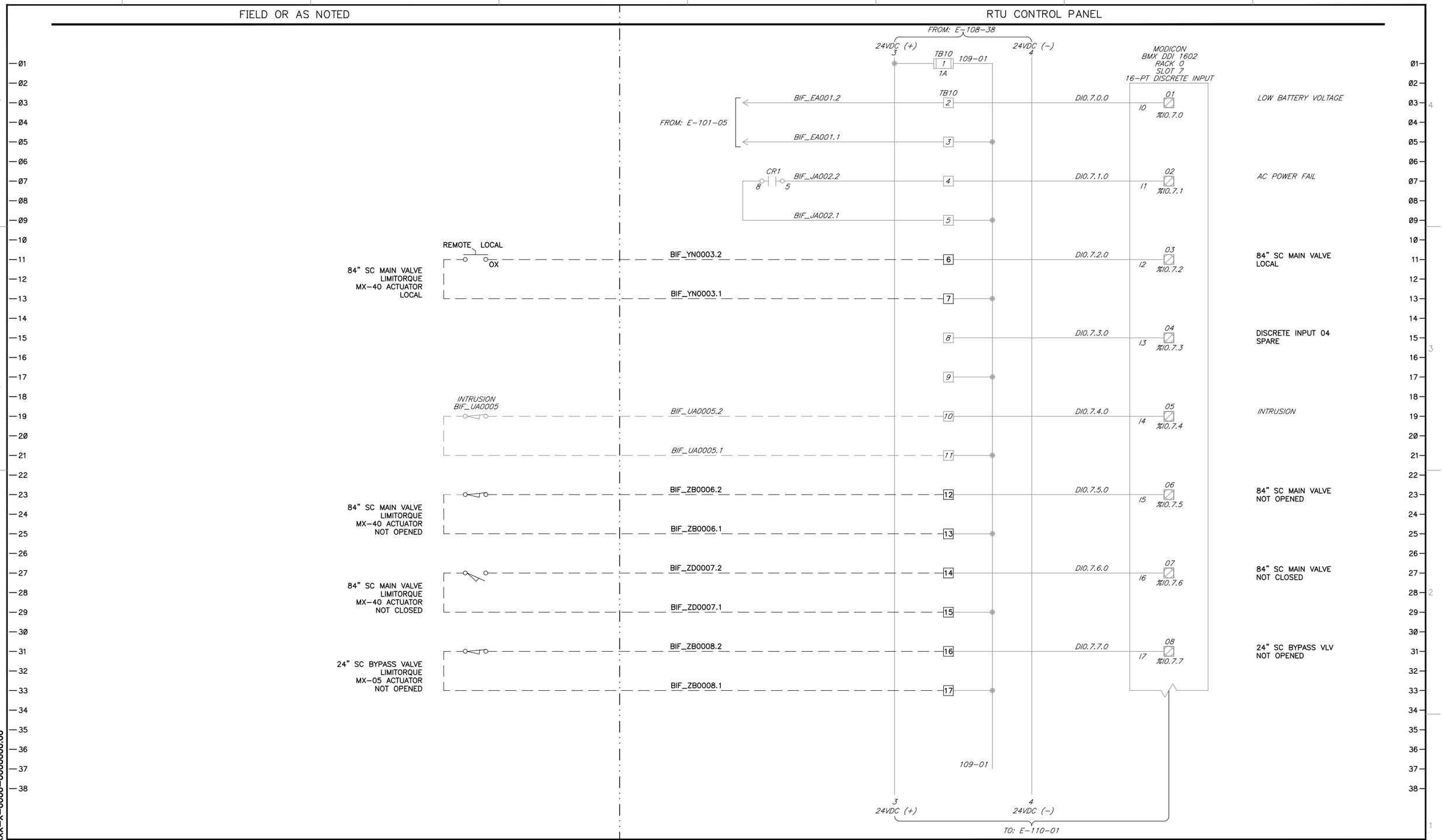

REV	DESCRIPTION	DATE	APPR.
1	ADDENDUM #1	07/17	TL

ADDENDA DRAWING
07-21-17

REFERENCE INFORMATION AND NOTES

DATE 07-21-17
DESIGN N. MORAR
DRAWN J. FORD
CHECKED A. TAILOR

ENGINEERING CERTIFICATION
REGISTERED PROFESSIONAL ENGINEER NAGIN MORAR No. C046561 CONTROL SYSTEMS STATE OF CALIFORNIA
07.21.2017
PROJECT ENGINEER DATE

Santa Clara Valley Water District

PROJECT NAME AND SHEET DESCRIPTION:
PACHECO CONDUIT INSPECTION AND REHABILITATION PROJECT
SLOT 7
DISCRETE INPUT MODULE CONTROL WIRING

SCALE: NOT TO SCALE
VERIFY SCALES 0 1"
BAR IS ONE INCH ON ORIGINAL DRAWING IF NOT ONE INCH THEN THIS SHEET, AND/OR SCALES ACCORDINGLY

PROJECT NUMBER: 91214001
SHEET CODE: 1
E-109
SHEET NUMBER: 55.19 OF 55

USERNAME: Amirabde 7/19/2017 4:34 PM
FILENAME: K:\Active Projects\MP-91214001\PACHECO PL REHAB PROJECT\SHEETS\ADDENDA 1\E-109.dwg

DOCUMENT NUMBER: XXXX-X-0000-0000000.00

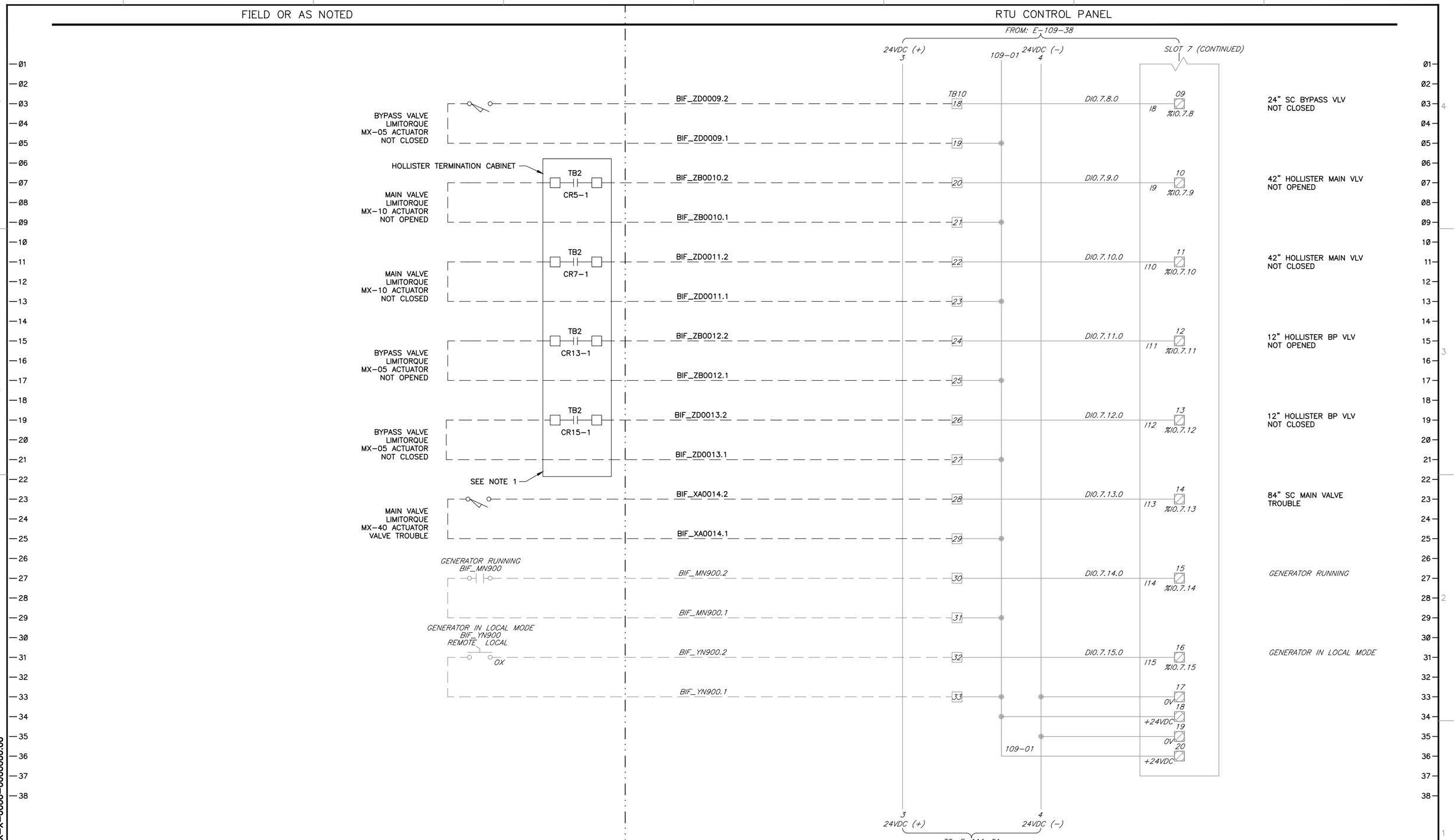

REV	DESCRIPTION	DATE	APPR.
1	ADDENDUM #1	07/17	TL

ADDENDA DRAWING 07-21-17

REFERENCE INFORMATION AND NOTES

1. REFER TO DWGS E-118 AND E-119 FOR DETAIL.

DATE	07-21-17
DESIGN	N. MORAR
DRAWN	J. FORD
CHECKED	A. TAILOR

ENGINEERING CERTIFICATION

REGISTERED PROFESSIONAL ENGINEER NASIN MORAR No. C54054 CONTROL SYSTEMS STATE OF CALIFORNIA

07.21.2017

PROJECT ENGINEER DATE

Santa Clara Valley Water District

PROJECT NAME AND SHEET DESCRIPTION:

PACHECO CONDUIT INSPECTION AND REHABILITATION PROJECT

SLOT 7

DISCRETE INPUT MODULE CONTROL WIRING

SCALE	PROJECT NUMBER
NOT TO SCALE	91214001

VERIFY SCALES 0 1"

BAR IS ONE INCH ON ORIGINAL DRAWING IF NOT ONE INCH ON THIS SHEET, ADJUST SCALES ACCORDINGLY

SHEET CODE: 1

E-110

SHEET NUMBER: 55.20 OF 55

USERNAME: Amirabde 7/19/2017 4:34 PM
FILENAME: K:\Active Projects\MP-91214001\PACHECO PL REHAB PROJECT\SHEETS\ADDENDA 1\E-110.dwg

DOCUMENT NUMBER: XXXX-X-0000-0000000.00

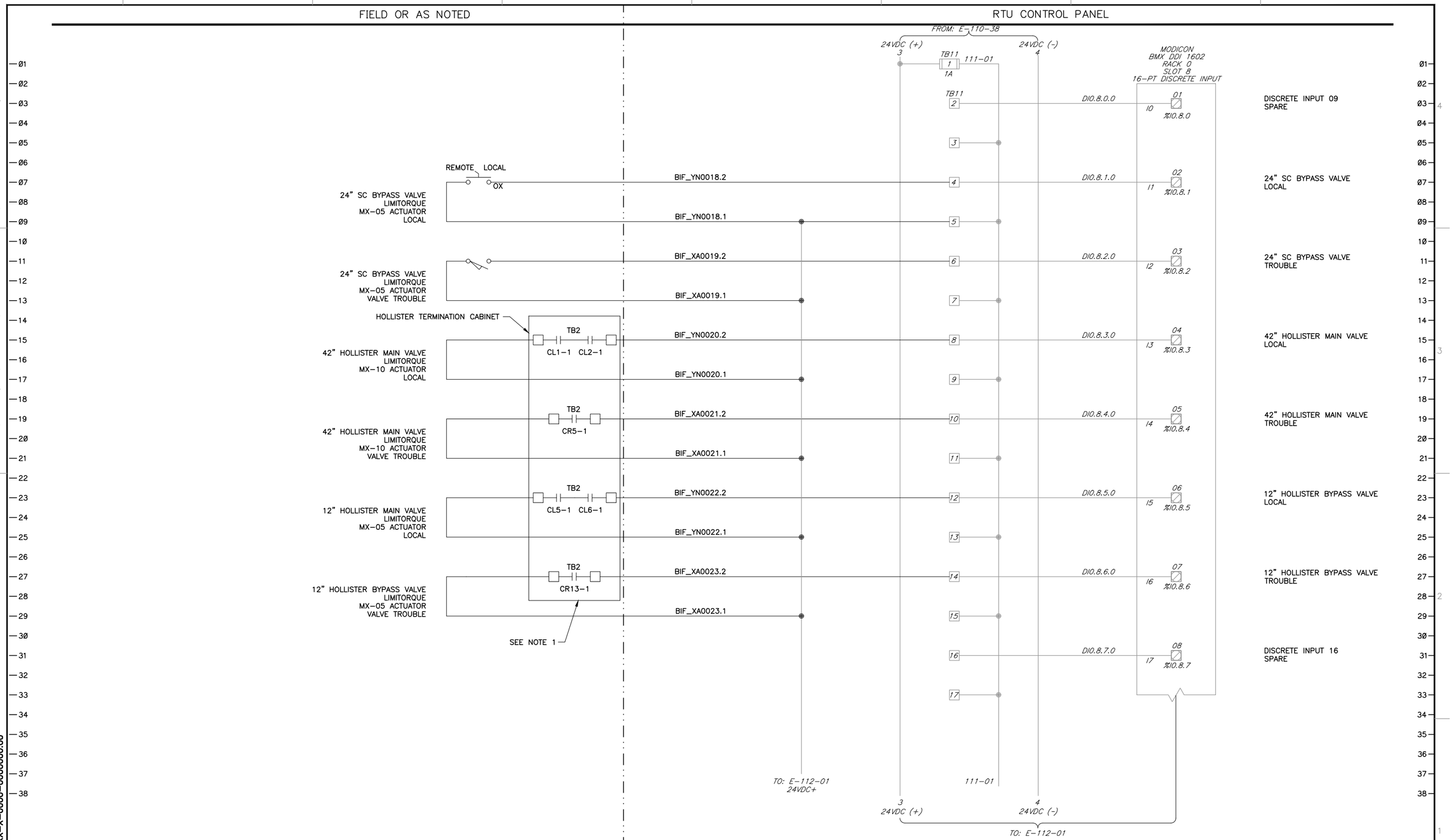

REV	DESCRIPTION	DATE	APPR.
1	ADDENDUM #1	07/17	TL

ADDENDA DRAWING
07-21-17

REFERENCE INFORMATION AND NOTES

1. REFER TO DWGS E-118 AND E-119 FOR DETAIL.

DATE 07-21-17
DESIGN N. MORAR
DRAWN J. FORD
CHECKED A. TAILOR

ENGINEERING CERTIFICATION
REGISTERED PROFESSIONAL ENGINEER NAGIN MORAR No. C046561 CONTROL SYSTEMS STATE OF CALIFORNIA
07.21.2017
PROJECT ENGINEER DATE

Santa Clara Valley Water District

PROJECT NAME AND SHEET DESCRIPTION:

PACHECO CONDUIT INSPECTION AND REHABILITATION PROJECT

SLOT 8
DISCRETE INPUT MODULE CONTROL WIRING

SCALE: NOT TO SCALE
VERIFY SCALES 0 1"
BAR IS ONE INCH ON ORIGINAL DRAWING IF NOT ONE INCH ON THIS SHEET, ADJUST SCALES ACCORDINGLY

PROJECT NUMBER: 91214001
SHEET CODE: E-111
SHEET NUMBER: 55.21 OF 55

USERNAME: Patrkey 7/19/2017 4:34 PM
FILENAME: K:\Active Projects\MP-91214001\PACHECO PL REHAB PROJECT\SHEETS\ADDENDA 1\E-111.dwg

DOCUMENT NUMBER: XXXX-X-0000-0000000.00

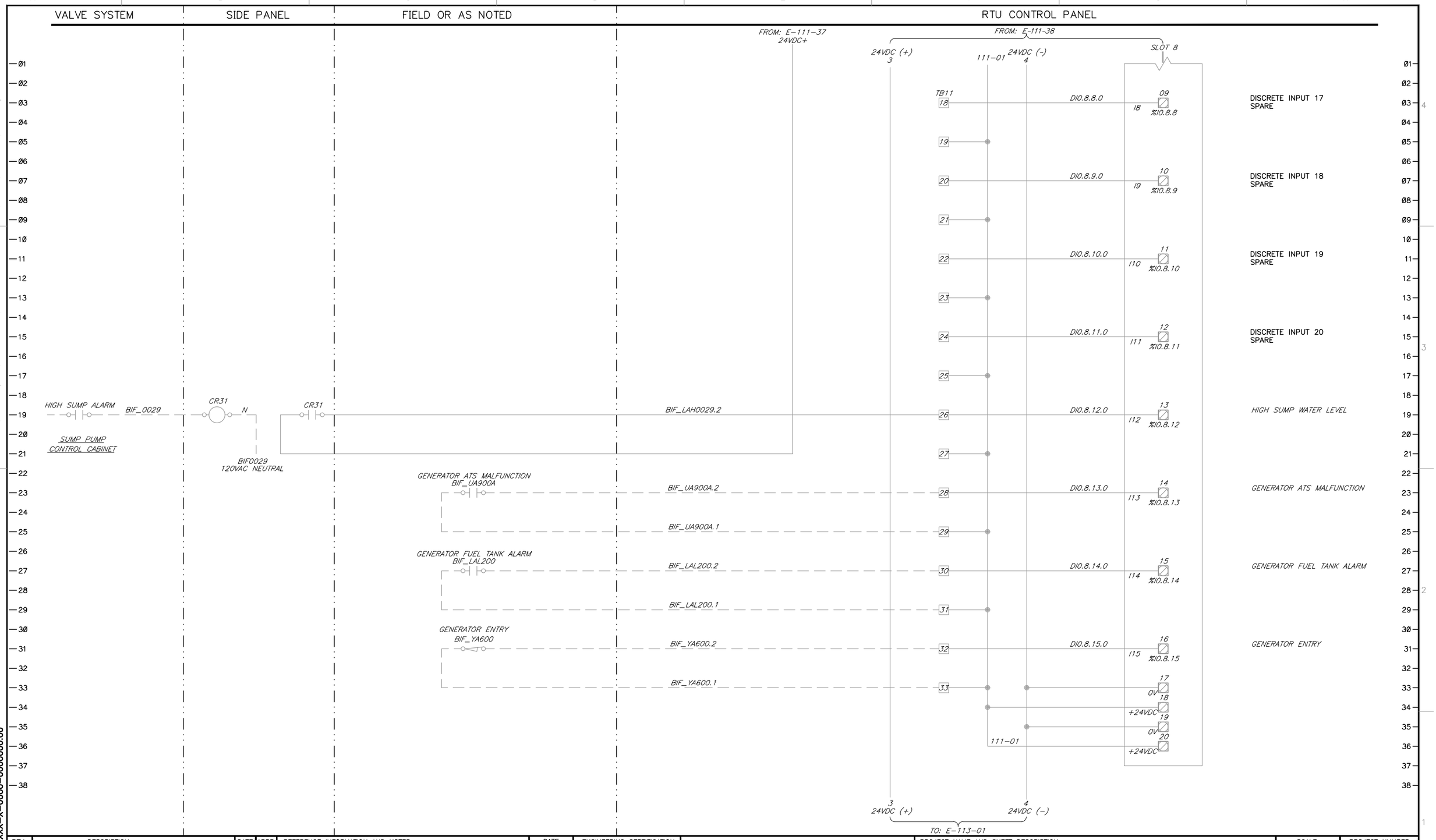

USERNAME: Amirabde 7/19/2017 4:34 PM
FILENAME: K:\Active Projects\MP-91214001\PACHECO PL REHAB PROJECT\SHEETS\ADDENDA 1\E-112.dwg

DOCUMENT NUMBER: XXXX-X-0000-0000000.00

REV	DESCRIPTION	DATE	APPR.
1	ADDENDUM #1	07/17	TL

ADDENDA DRAWING
07-21-17

REFERENCE INFORMATION AND NOTES

DATE	07-21-17
DESIGN	N. MORAR
DRAWN	J. FORD
CHECKED	A. TAILOR

ENGINEERING CERTIFICATION
REGISTERED PROFESSIONAL ENGINEER NAGIN MORAR No. C046547 CONTROL SYSTEMS STATE OF CALIFORNIA
07.21.2017
PROJECT ENGINEER DATE

Santa Clara Valley Water District

PROJECT NAME AND SHEET DESCRIPTION:
PACHECO CONDUIT INSPECTION AND REHABILITATION PROJECT
SLOT 8
DISCRETE INPUT MODULE CONTROL WIRING

SCALE: NOT TO SCALE
VERIFY SCALES: 0 1"
BAR IS ONE INCH ON ORIGINAL DRAWING. IF NOT ONE INCH ON THIS SHEET, ADJUST SCALES ACCORDINGLY

PROJECT NUMBER: 91214001
SHEET CODE: 1
E-112
SHEET NUMBER: 55.22 OF 55

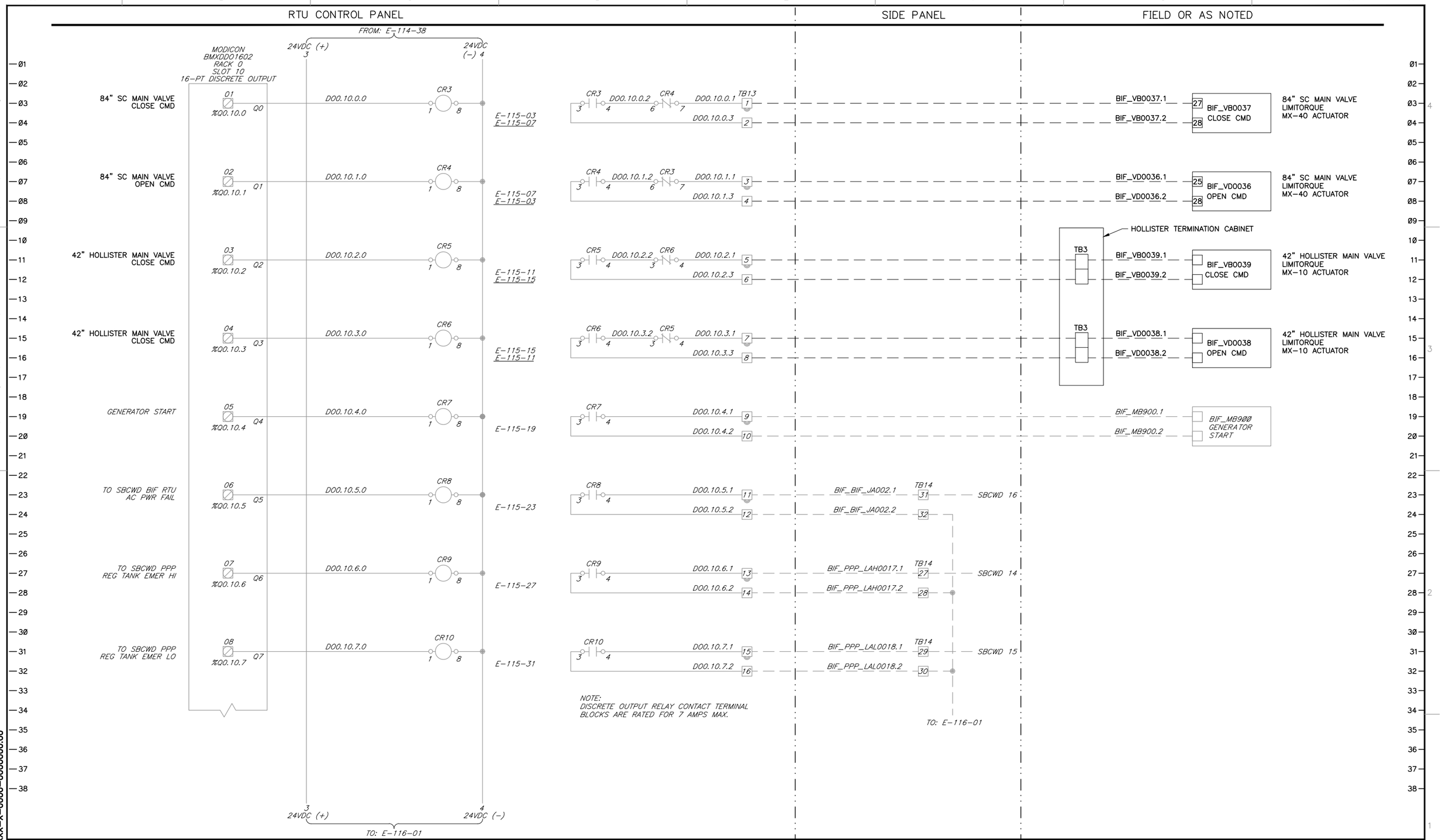

USERNAME: Amirabde 7/19/2017 4:34 PM
FILENAME: K:\Active Projects\MP-91214001\PACHECO PL REHAB PROJECT\SHEETS\ADDENDA 1\E-115.dwg

DOCUMENT NUMBER: XXXX-X-0000-0000000.00

REV	DESCRIPTION	DATE	APPR.
1	ADDENDUM #1	07/17	TL

ADDENDA DRAWING
07-21-17

REFERENCE INFORMATION AND NOTES

DATE	
07-21-17	
DESIGN	N. MORAR
DRAWN	J. FORD
CHECKED	A. TAILOR

ENGINEERING CERTIFICATION
REGISTERED PROFESSIONAL ENGINEER NAGIN MORAR No. C046564 CONTROL SYSTEMS STATE OF CALIFORNIA
07.21.2017
PROJECT ENGINEER DATE

Santa Clara Valley Water District

PROJECT NAME AND SHEET DESCRIPTION:
PACHECO CONDUIT INSPECTION AND REHABILITATION PROJECT
SLOT 10
DISCRETE OUTPUT MODULE CONTROL WIRING

SCALE: NOT TO SCALE
VERIFY SCALES 0 1"
BAR IS ONE INCH ON ORIGINAL DRAWING IF NOT ONE INCH THEN ADJUST THIS SHEET, ADJUST SCALES ACCORDINGLY

PROJECT NUMBER: 91214001
SHEET CODE: 1
E-115
SHEET NUMBER: 55.23 OF 55

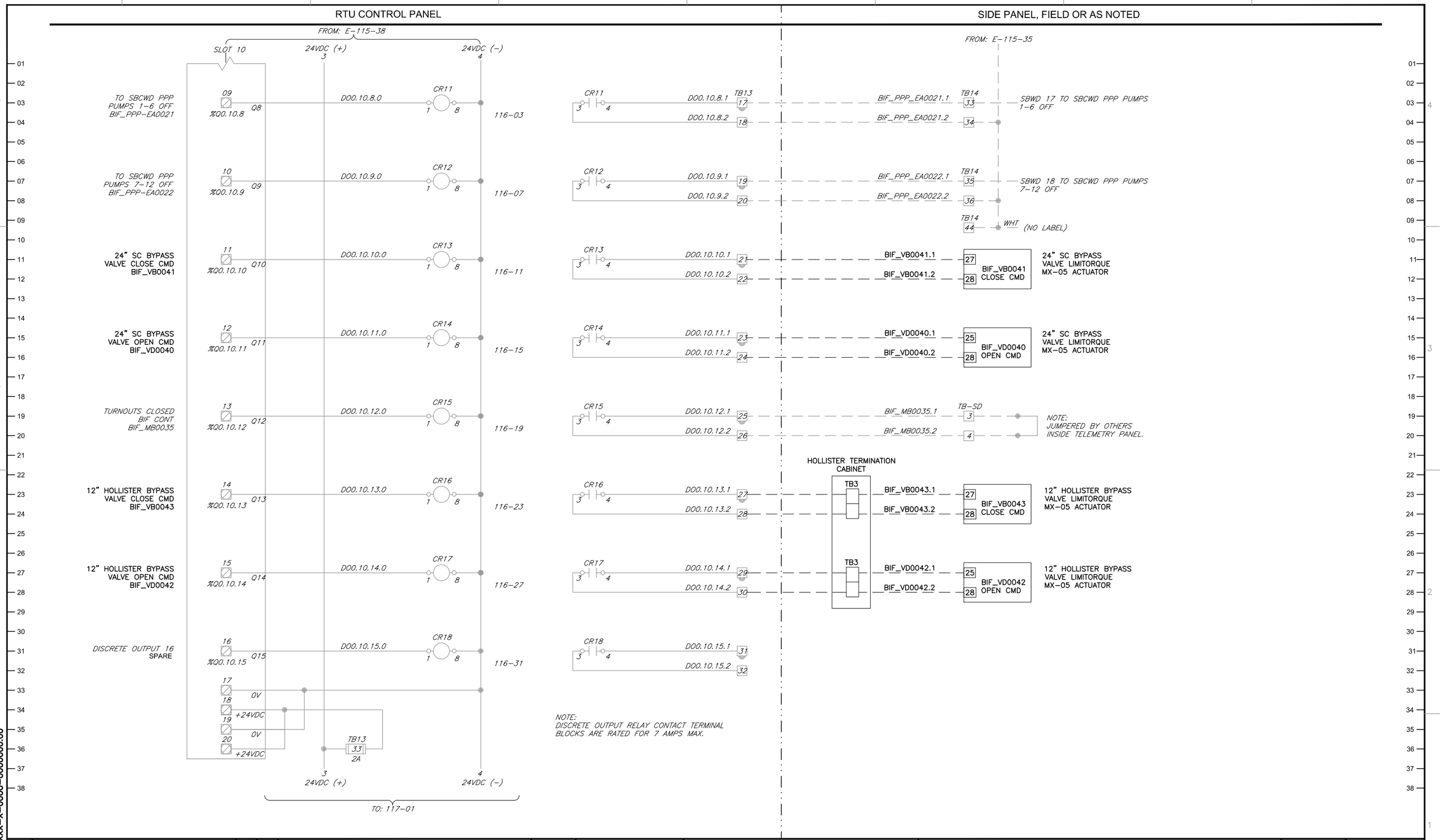

USERNAME: Amirabde 7/19/2017 4:34 PM
FILENAME: K:\Active Projects\MP-91214001\PACHECO PL REHAB PROJECT\SHEETS\ADDENDA 1\E-116.dwg

DOCUMENT NUMBER: XXXX-X-0000-0000000.00

REV	DESCRIPTION	DATE	APPR.	REFERENCE INFORMATION AND NOTES
1	ADDENDUM #1	07/17	TL	

ADDENDA DRAWING
07-21-17

DATE	07-21-17
DESIGN	N. MORAR
DRAWN	A. ABDEL
CHECKED	A. TAILOR

ENGINEERING CERTIFICATION
REGISTERED PROFESSIONAL ENGINEER NASIM MORAR No. C048561 CONTROL SYSTEMS STATE OF CALIFORNIA
07.21.2017
PROJECT ENGINEER DATE

Santa Clara Valley Water District

PROJECT NAME AND SHEET DESCRIPTION:
PACHECO CONDUIT INSPECTION AND REHABILITATION PROJECT
SLOT 10
DISCRETE OUTPUT MODULE CONTROL WIRING

SCALE: NOT TO SCALE
VERIFY SCALES: 0 1"
BAR IS ONE INCH ON ORIGINAL DRAWING IF NOT ONE INCH ON THIS SHEET, ADJUST SCALES ACCORDINGLY

PROJECT NUMBER: 91214001
SHEET CODE: 1
E-116
SHEET NUMBER: 55 OF 55

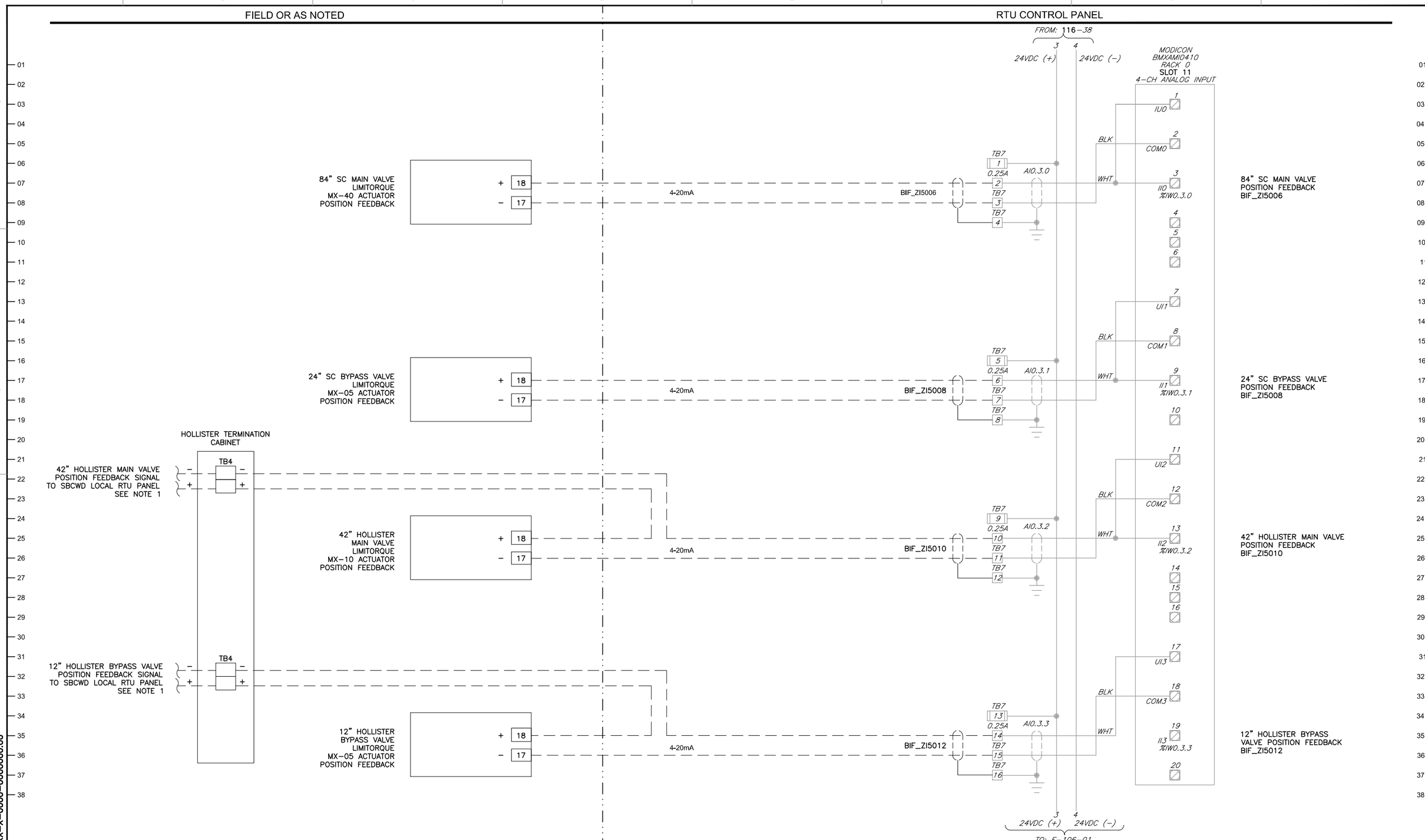

REV	DESCRIPTION	DATE	APPR.
1	ADDENDUM #1	07/17	TL

ADDENDA DRAWING
07-21-17

REFERENCE INFORMATION AND NOTES

1. CONTRACTOR TO JUMPER THE POSITION FEEDBACK LOOPS IN THE HOLLISTER TERMINATION CABINET IF SBCWD IS NOT USING THIS SIGNAL.

DATE	07-21-17
DESIGN	N. MORAR
DRAWN	A. ABDEL
CHECKED	A. TAILOR

ENGINEERING CERTIFICATION

REGISTERED PROFESSIONAL ENGINEER — NASIM MORAR — No. C056856 — CONTROL SYSTEMS — STATE OF CALIFORNIA

07.21.2017

PROJECT ENGINEER DATE

Santa Clara Valley Water District

PROJECT NAME AND SHEET DESCRIPTION:

PACHECO CONDUIT INSPECTION AND REHABILITATION PROJECT

SLOT 11

ANALOG INPUT MODULE CONTROL WIRING

SCALE: NOT TO SCALE

VERIFY SCALES: 0 — 1"

BAR IS ONE INCH ON ORIGINAL DRAWING. IF NOT ONE INCH ON THIS SHEET, ADJUST SCALES ACCORDINGLY

PROJECT NUMBER: 91214001

SHEET CODE: 1

E-117

SHEET NUMBER: 55.25 OF 55

DOCUMENT NUMBER: XXXX-X-0000-0000000.00

USERNAME: Amirabde 7/19/2017 4:34 PM
FILENAME: K:\Active Projects\MP-91214001\PACHECO PL REHAB PROJECT\SHEETS\ADDENDA 1\E-117.dwg

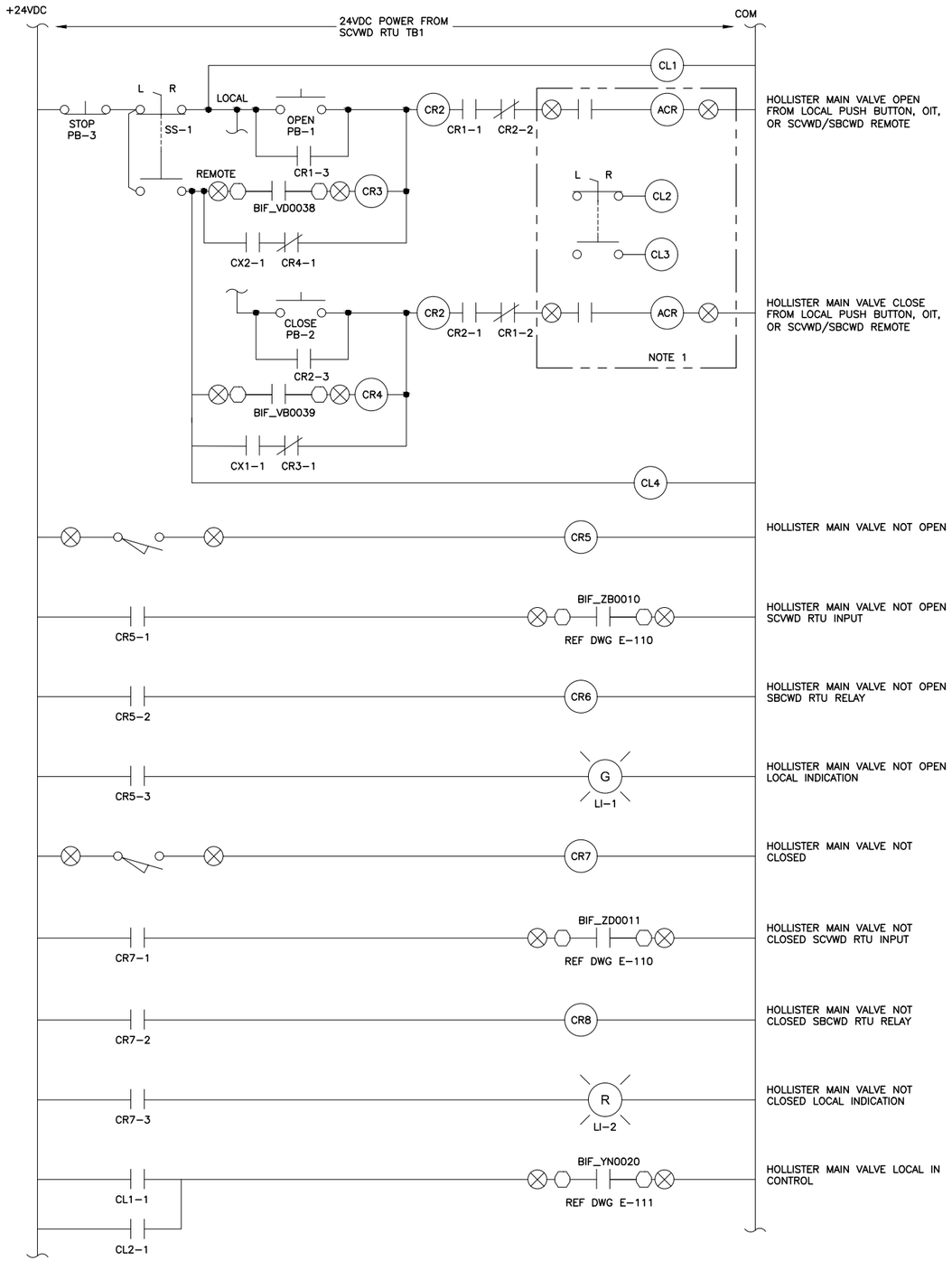

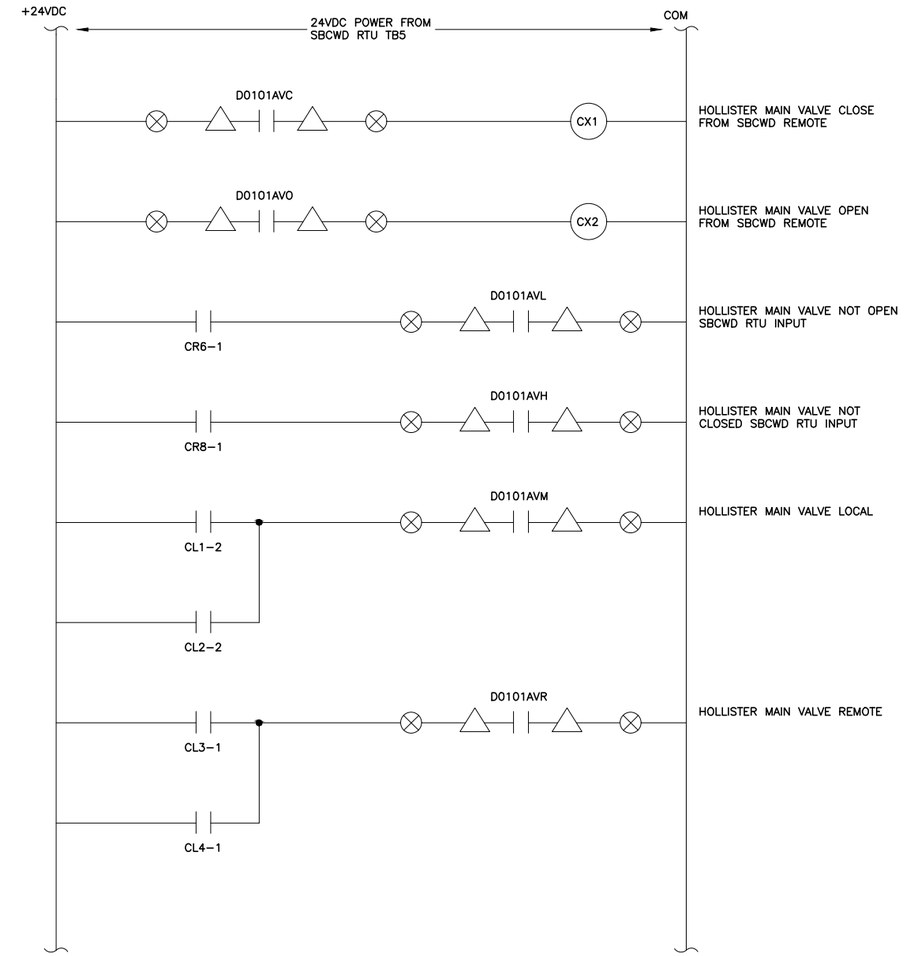

LEGEND

- SBCWD RTU
- SCVWD RTU
- FIELD WIRING
- ACR — ACTUATOR CONTROL RELAY

NOTE:

1. ACTUATOR CONTROL RELAY PROVIDED BY MANUFACTURER ACR WILL BE SET UP FOR INCHING TYPE OF CONTROL.

REV	DESCRIPTION	DATE	APPR.	REFERENCE INFORMATION AND NOTES
1	ADDENDUM #1	07/17	TL	

ADDENDA DRAWING 07-21-17

DATE 07-21-17
DESIGN N. MORAR
DRAWN A. ABDEL
CHECKED A. TAILOR

ENGINEERING CERTIFICATION
REGISTERED PROFESSIONAL ENGINEER NASIN MORAR No. C56156 CONTROL SYSTEMS STATE OF CALIFORNIA
07.21.2017
PROJECT ENGINEER DATE

Santa Clara Valley Water District

PROJECT NAME AND SHEET DESCRIPTION:
PACHECO CONDUIT INSPECTION AND REHABILITATION PROJECT
HOLLISTER MAIN VALVE CONTROL SCHEMATIC

SCALE: NOT TO SCALE
VERIFY SCALES: 0 — 1"
BAR IS ONE INCH ON ORIGINAL DRAWING. IF NOT ONE INCH ON THIS SHEET, ADJUST SCALES ACCORDINGLY

PROJECT NUMBER: 91214001
SHEET CODE: 1
E-118
SHEET NUMBER: 55.26 OF 55

USERNAME: Patrkey 7/19/2017 4:34 PM
FILENAME: K:\Active Projects\MP-91214001\PACHECO PL REHAB PROJECT\SHEETS\ADDENDA 1\E-118.dwg
DOCUMENT NUMBER: PPP-I-9121-XXXXX

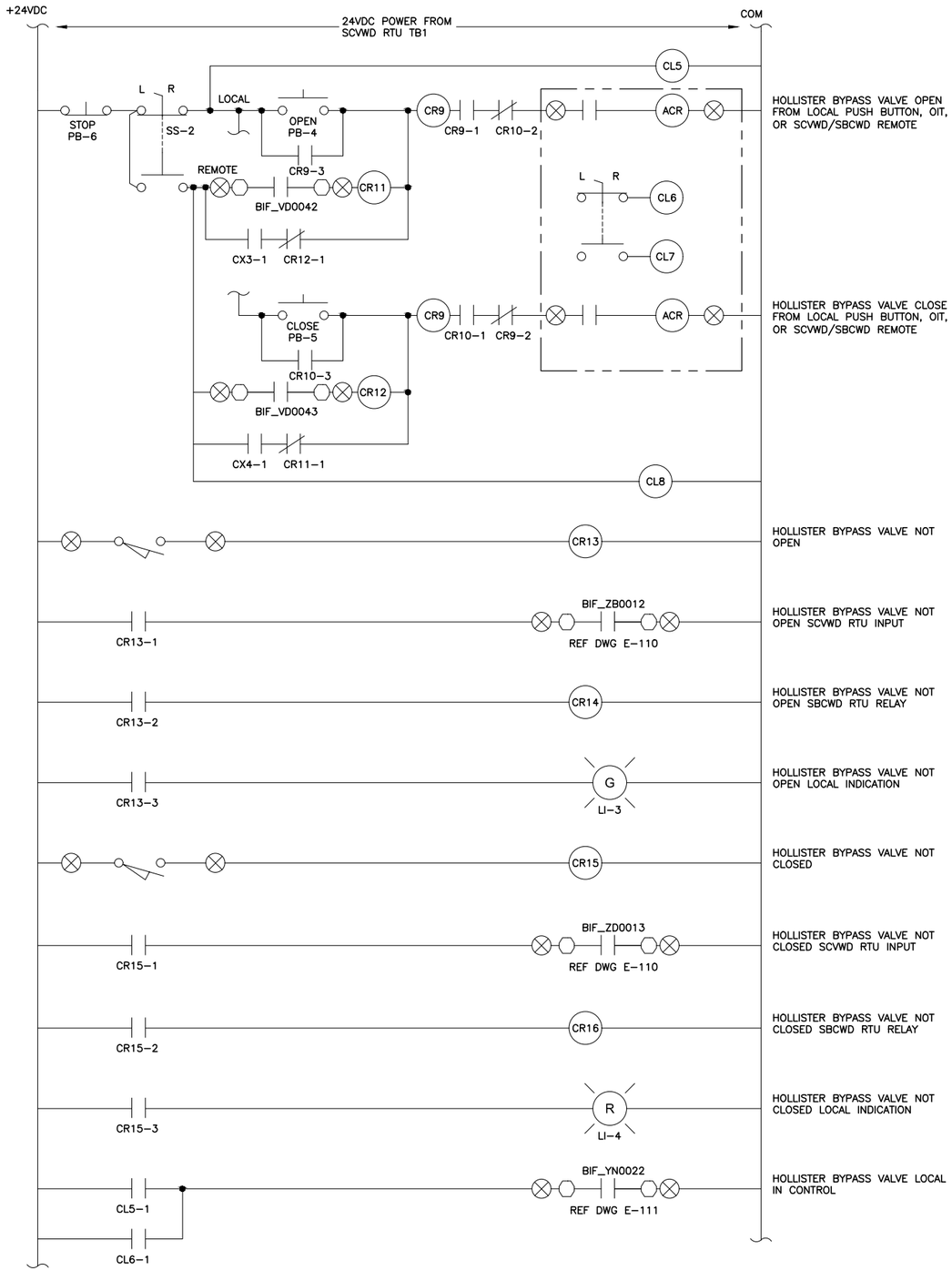

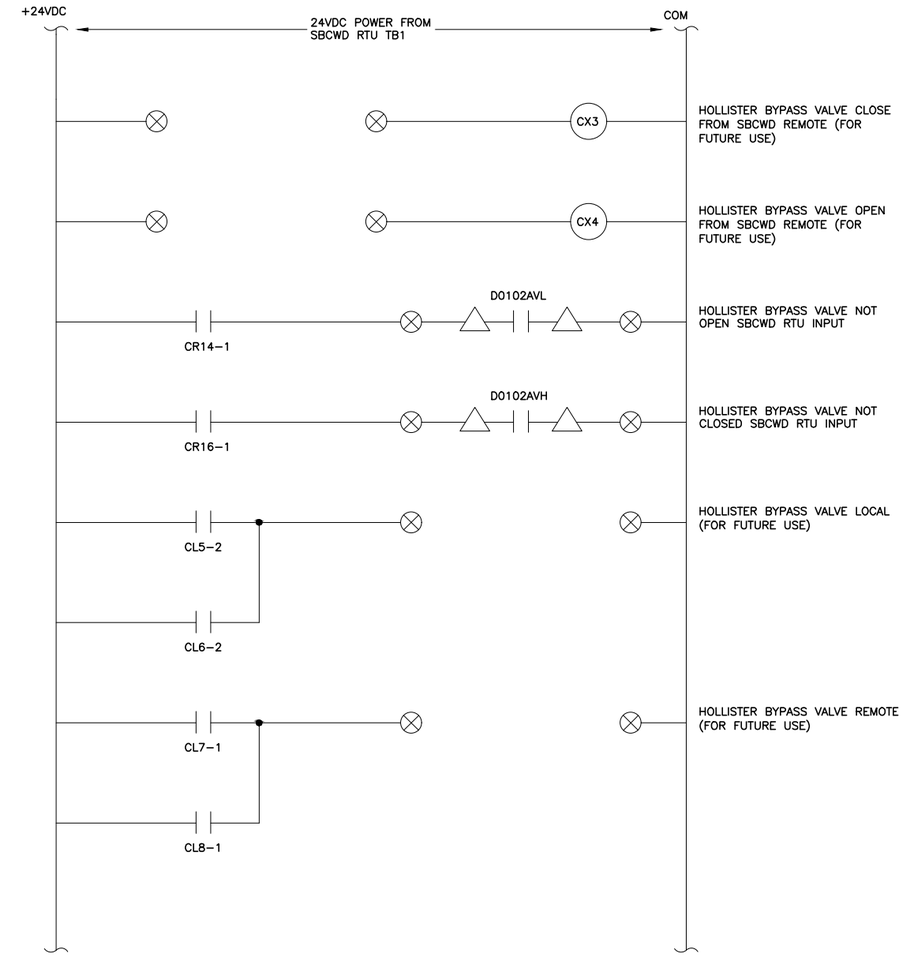

LEGEND

- SBCWD RTU
- SCVWD RTU
- FIELD WIRING
- ACR — ACTUATOR CONTROL RELAY

NOTE:

1. ACTUATOR CONTROL RELAY PROVIDED BY MANUFACTURER ACR WILL BE SET UP FOR INCHING TYPE OF CONTROL.

REV	DESCRIPTION	DATE	APPR.	REFERENCE INFORMATION AND NOTES
1	ADDENDUM #1	07/17	TL	

ADDENDA DRAWING 07-21-17

DATE 07-21-17
DESIGN N. MORAR
DRAWN A. ABDEL
CHECKED A. TAILOR

ENGINEERING CERTIFICATION
REGISTERED PROFESSIONAL ENGINEER — NASIN MORAR — No. C56056 — CONTROL SYSTEMS — STATE OF CALIFORNIA
07.21.2017
PROJECT ENGINEER DATE

Santa Clara Valley Water District

PROJECT NAME AND SHEET DESCRIPTION:
PACHECO CONDUIT INSPECTION AND REHABILITATION PROJECT
HOLLISTER BYPASS VALVE CONTROL SCHEMATIC

SCALE: NOT TO SCALE
VERIFY SCALES: 0 — 1"
BAR IS ONE INCH ON ORIGINAL DRAWING. IF NOT ONE INCH ON THIS SHEET, ADJUST SCALES ACCORDINGLY

PROJECT NUMBER: 91214001
SHEET CODE: 1
E-119
SHEET NUMBER: 55.27 OF 55

DOCUMENT NUMBER: PPP-I-9121-XXXXX

USERNAME: Amirabde 7/19/2017 4:34 PM
FILENAME: K:\Active Projects\MP-91214001\PACHECO PL REHAB PROJECT\SHEETS\ADDENDA 1\E-119.dwg

BILL OF MATERIALS

ITEM	QTY	DEVICE	DESCRIPTION	MANUFACTURER	PART NUMBER
1	1	BIF TERMINATION CABINET	NEMA TYPE 3R WALL-MOUNT ENCLOSURE 48"H x 36"W x 16"D	HOFFMAN	CSD483616
2	1	–	ENCLOSURE BACK PANEL	HOFFMAN	CP4836
3	1	CB1, 2, 4	24VDC 1-POLE 5A DIN-RAIL MOUNTED CIRCUIT BREAKER	EATON	FAZ-C5-1-NA-SP
4	*	–	35MM DIN RAIL	–	–
5	*	–	1.5" WIRE MANAGEMENT (GRAY)	–	–
6	2	LI-1, 3	24VDC PUSH-TO-TEST INDICATING PILOT LIGHT, GREEN	ALLEN-BRADLEY	800T-QT24G
7	2	LI-2, 4	24VDC PUSH-TO-TEST INDICATING PILOT LIGHT, RED	ALLEN-BRADLEY	800T-QT24R
8	2	SS-1, 2	24VDC SELECTOR SWITCH, 2-POSITION (LOCAL-REMOTE)	ALLEN-BRADLEY	800T-H2A
9	2	PB-1, 3	24VDC PUSH BUTTON, RED (NO)	ALLEN-BRADLEY	800T-A6A
10	2	PB-2, 4	24VDC PUSH BUTTON, GREEN (NO)	ALLEN-BRADLEY	800T-A1A
11	2	PB-3, 6	24VDC PUSH BUTTON, BLACK (NC)	ALLEN-BRADLEY	800T-A2A
12	8	CR1, 2, 5, 7, 9, 10, 13, 15	24VDC 4-POLE RELAY W/ LED INDICATING LIGHT	IDEC	RH4B-UL24VDC
13	8	–	DIN MOUNT 4-POLE RELAY BASE	IDEC	SH4B-05
14	20	CR3, 4, 6, 8, 11, 12, 14, 16 CX1, 2, 3, 4 CL1, 2, 3, 4, 5, 6, 7, 8	24VDC 2-POLE RELAY W/ LED INDICATING LIGHT	IDEC	RH2B-UL24VDC
15	20	–	DIN MOUNT 2-POLE RELAY BASE	IDEC	SH2B-05
16	1	LIGHT	24VDC PANEL LIGHT	–	–
17	1	CB3, 5	24VDC 1-POLE 3A DIN-RAIL MOUNTED CIRCUIT BREAKER	EATON	FAZ-C3-1-NA-SP
18	10	TB1	35MM DIN-RAIL MOUNT TERMINAL BLOCK	PHOENIX CONTACT	3004362
19	90	TB2, 3, 4	35MM DIN-RAIL MOUNT TERMINAL BLOCK	PHOENIX CONTACT	3004362
20	*	–	35MM DIN-RAIL TERMINAL BLOCKS END COVERS	PHOENIX CONTACT	3003020

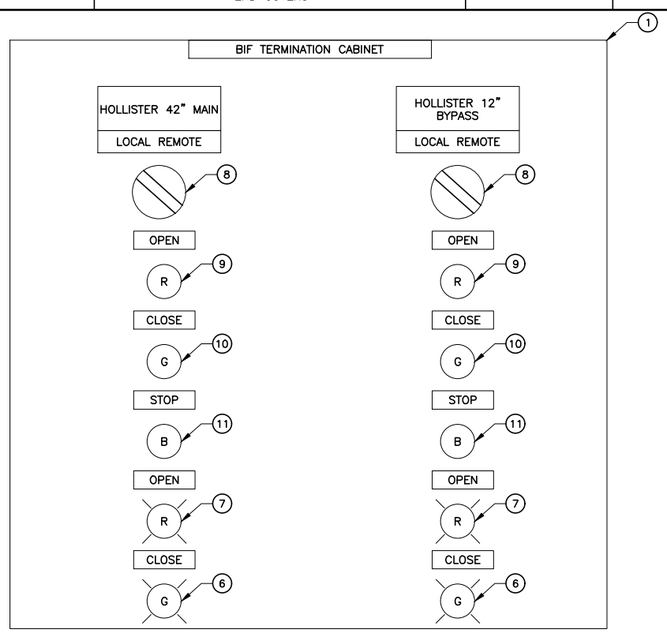

HOLLISTER TERMINATION CABINET (EXTERIOR)

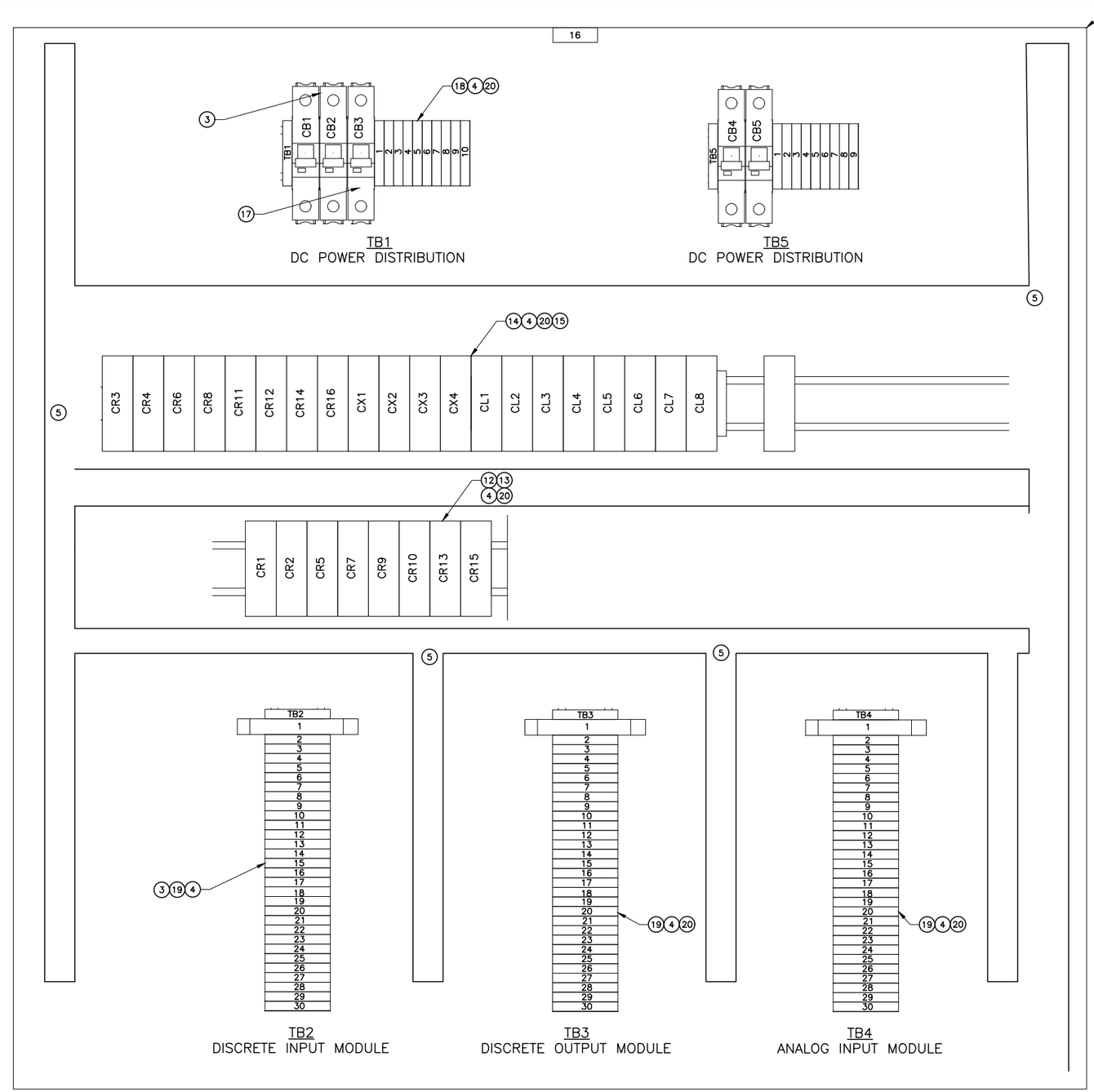

HOLLISTER TERMINATION CABINET (INTERIOR)

REV	DESCRIPTION	DATE	APPR.	REFERENCE INFORMATION AND NOTES
1	ADDENDUM #1	07/17	TL	

ADDENDA DRAWING
07-21-17

DATE 07-21-17
DESIGN N. MORAR
DRAWN A. ABDEL
CHECKED A. TAILOR

ENGINEERING CERTIFICATION
REGISTERED PROFESSIONAL ENGINEER NAGIN MORAR No. C056847 CONTROL SYSTEMS STATE OF CALIFORNIA
07.21.2017
PROJECT ENGINEER DATE

Santa Clara Valley Water District

PROJECT NAME AND SHEET DESCRIPTION:
PACHECO CONDUIT INSPECTION AND REHABILITATION PROJECT
HOLLISTER TERMINATION CABINET

SCALE: NOT TO SCALE
VERIFY SCALES 0 1"
BAR IS ONE INCH ON ORIGINAL DRAWING IF NOT ONE INCH ADJUST THIS SHEET ACCORDINGLY

PROJECT NUMBER: 91214001
SHEET CODE: 1 E-120
SHEET NUMBER: 55.28 OF 55

DOCUMENT NUMBER: PPP-I-9121-XXXXX
USERNAME: Amirabde 7/19/2017 4:34 PM
FILENAME: K:\Active Projects\MP-91214001\PACHECO PL REHAB PROJECT\SHEETS\ADDENDA 1\E-120.dwg

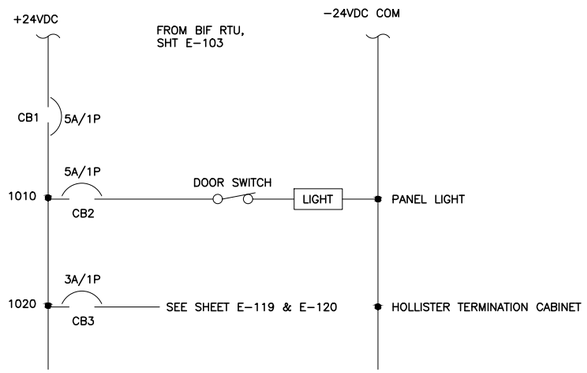

HOLLISTER TERMINATION CABINET POWER DISTRIBUTION TB1

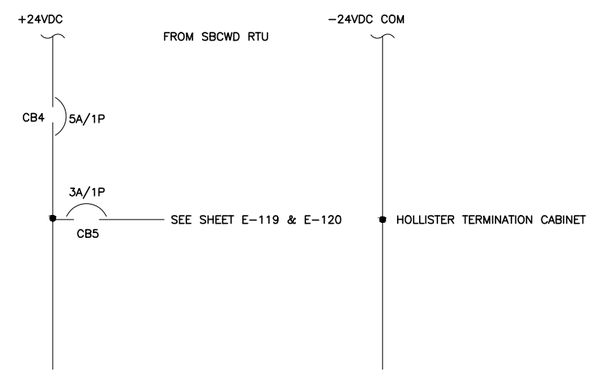

HOLLISTER TERMINATION CABINET POWER DISTRIBUTION TB5

REV	DESCRIPTION	DATE	APPR.
1	ADDENDUM #1	07/17	TL

ADDENDA DRAWING
07-21-17

REFERENCE INFORMATION AND NOTES

DATE 07-21-17
DESIGN N. MORAR
DRAWN A. ABDEL
CHECKED A. TAILOR

ENGINEERING CERTIFICATION
REGISTERED PROFESSIONAL ENGINEER NAGIN MORAR No. C46854 CONTROL SYSTEMS STATE OF CALIFORNIA
07.21.2017
PROJECT ENGINEER DATE

Santa Clara Valley Water District

PROJECT NAME AND SHEET DESCRIPTION:
PACHECO CONDUIT INSPECTION AND REHABILITATION PROJECT
HOLLISTER TERMINATION CABINET
24VDC ELECTRICAL DISTRIBUTION

SCALE: NOT TO SCALE
VERIFY SCALES 0 1"
BAR IS ONE INCH ON ORIGINAL DRAWING IF NOT ONE INCH ON THIS SHEET, ADJUST SCALES ACCORDINGLY

PROJECT NUMBER: 91214001
SHEET CODE: 1
E-121
SHEET NUMBER: 55.29 OF 55

USERNAME: Amirabde 7/19/2017 4:34 PM
FILENAME: K:\Active Projects\MP-91214001\PACHECO PL REHAB PROJECT\SHEETS\ADDENDA 1\E-121.dwg
DOCUMENT NUMBER: PPP-I-9121-XXXXX

CAPITAL PROGRAM SERVICES
5750 ALMADEN EXPRESSWAY
SAN JOSE, CA 95118-3686
TELEPHONE (408) 630-3088
FACSIMILE (408) 979-5631
www.valleywater.org
scvwdplanroom@valleywater.org

Notification of this Addendum is transmitted via email to all current plan holders. This Addendum is posted on the District website at www.valleywater.org/Programs/Construction.aspx.

July 21, 2017

ADDENDUM NO. 2
TO CONTRACT DOCUMENTS FOR THE
PACHECO CONDUIT INSPECTION AND REHABILITATION PROJECT
Project No. 91214001 & 95084002

Contract No. C0629

Notice is hereby given to Prospective Bidders that the Contract Documents are modified as hereinafter set forth.

BID DOCUMENTS

TITLE PAGE

REPLACE the text that reads "Bid Opening: July 26, 2017" with the following text**:**

"Bid Opening: July **31**, 2017"

TABLE OF CONTENTS

REPLACE text in Section III. that reads "FORMS DUE BY 5 PM ON THE 2nd DAY AFTER BID OPENING" with:

"FORMS DUE BY **10 AM** ON THE 2nd DAY AFTER BID OPENING"

NOTICE TO BIDDERS

Paragraph 1. Notice

REPLACE Paragraph 1. with:

"**1.** **Notice**. Notice is hereby given that sealed Proposals will be accepted by the Construction Program of the Santa Clara Valley Water District, Room B108, of the District's Administration Building, 5750 Almaden Expressway, San Jose, California 95118 up to 2 p.m. on **Monday** July **31**, 2017, for furnishing all material and performing all work necessary for

construction of the Pacheco Conduit Inspection and Rehabilitation Project, in Santa Clara County, CA."

ADD new Paragraph 20. Bid Protests as follows:

"**20.** **Bid Protests.** Any Bid protest unrelated to Instructions to Bidders Paragraph 19.A. must be submitted in writing to the Engineer identified in the Special Provisions, Engineer, Article 14.01. **The protest must be received before 10 a.m. on the third business day following Bid opening**. This supersedes Paragraph 19.B. of the Instructions to Bidders."

BID FORM NO. 1 – PROPOSAL AND BID ITEMS

REPLACE BID FORM NO. 1 Proposal Form and Bid Items (REV. 1) with:

BID FORM NO.1 Proposal Form and Bid Items (REV. 2) **(ATTACHMENT A)**

Changes have been made to Bid Item 57, see in bold

BID FORM NO. 4 – SMALL BUSINESS OUTREACH PROGRAM: INSTRUCTIONS AND COMPLIANCE DOCUMENT

REPLACE BID FORM NO. 4 – Small Business Outreach Program: Instructions and Compliance Document with:

BID FORM NO. 4 – Small Business Outreach Program: Instructions and Compliance Document (REV 1) **(ATTACHMENT B)**

The following changes were made in the attached BID FORM NO. 4 – Small Business Outreach Program: Instructions and Compliance Document (REV 1):

Part II: Compliance With Small Business Outreach Requirements (page 2 of 6) paragraph 3:

Text "5 p.m. on the 2nd day" was **replaced** with "10 a.m. on the second day"

Part IV: Requirements for Demonstrating Good Faith Effort (page 4 of 6) Paragraph A.:

Text "5 p.m. on the 2nd day" was **replaced** with "10 a.m. on the second day"

INSTRUCTIONS TO BIDDERS (online)

REPLACE Paragraph 19. Bid Protest, Paragraph B. with:

"19. Any Bid protest unrelated to Paragraph A. must be submitted in writing to the Engineer identified in the Special Provisions, Engineer, Article 14.01.

The protest must be received before **10 a.m.** on the third business day following the Bid opening."

SPECIFICATIONS AND CONTRACT DOCUMENTS

TABLE OF CONTENTS

APPENDICES

ADD new appendix titles to the Table of Contents:

"APPENDIX I
Biological Opinion for the 2016 Pacheco Conduit Maintenance Project (15-059)

APPENDIX J
Biological Memorandum – Pacheco Pipeline Rehabilitation Project

APPENDIX K
Botanical Survey of Pacheco Conduit, Vaults 2-42 Memorandum"

SPECIAL PROVISIONS

Article 12.03. Contract Time(s)

REPLACE Paragraph E.1. with**:**

"1. The following tentative schedule is based on a September 2017 project start date. Due to uncertain water supply and construction-related issues with ongoing projects and their system-wide and inter-agency operational impacts, these shutdowns and all related project activities may be rescheduled."

Article 15.03.02 Coordination with Others

ADD new Paragraph B. as follows:

"B. Work for the acoustic fiber optic cable monitoring system is divided up into short pipe sections (runs). The tentative schedule of pipeline runs is as follows:

RUN1	SCC#5 @ 15+03.05	TO	BIF @ STA 132+40
RUN2	BIF @ STA 132+40	TO	PC#35 @ STA 103+93.15
RUN3	PC#35 @ STA 103+93.15	TO	PC#31 @ STA 79+31.02
RUN4	PC#31 @ STA 79+31.02	TO	PC#25 @ STA 531+07.05
RUN5	PC#25 @ STA 531+07.05	TO	PC#17 @ STA 514+80.00
RUN6	PC#17 @ STA 514+80.00	TO	PC#13 @ STA 504+81.39

RUN7 PC#13 @ STA 504+81.39 TO PC#9 @ STA 495+19.24

RUN8 PC#9 @ STA 495+19.24 TO PSV @ STA 481+95

ADD new Paragraph C. as follows**:**

"C. See Special Provisions Article 12.01.F.3. for the scope of work to be completed under Milestone 3."

Article 16.05 Rights of Way

DELETE Paragraph B. in its entirety.

Article 18.01.01. District-Obtained Permits

REPLACE Paragraph A.2. with:

"2. Statewide National Pollutant Discharge Elimination System (NPDES) Permit for Drinking Water System Discharges to Waters of the United States"

REPLACE Paragraph A.5. with:

"5. Santa Clara Valley Water District's 2017 Pacheco Conduit Maintenance Project Environmental Assessment (EA) and Findings of No Significant Impact (FONSI) May 2017 from the US Bureau of Reclamation."

ADD new Paragraph A.7. as follows:

"7. National Marine Fisheries (NMFS) Section 7 of the Endangered Species Act (ESA), Not Likely to Adversely Affect Determination."

ADD new Paragraph A.8. as follows:

"8. Biological Opinion for Operations and Maintenance Activities on US Bureau of Reclamation Lands and Biological Opinion for the Pacheco Conduit Maintenance Project from the US Fish and Wildlife Service.

See Appendix I for the Biological Opinion for the Pacheco Conduit Maintenance Project from the US Fish and Wildlife Service (15-059)."

ADD new Paragraph A.9. as follows:

"9. State Drinking Water System Discharges to Waters of the U.S. General Permit (Order WQ 2014-0194-DWQ)"

Article 18.04. Air Pollution

REPLACE Paragraph A. with:

"A. The Contractor shall adhere to the Applicable BMPs (Air Quality) and Mitigation Measures listed in Appendix D during the performance of the work."

Article 19.02. Other Discharge Permits

REPLACE Paragraph A. with:

"A. The Contractor shall not violate any discharge prohibition contained in the California Regional Water Quality Control Board, Central Coastal Basin Water Quality Control Plan (Basin Plan). For a copy of the Basin Plan, see attached link: http://www.waterboards.ca.gov/centralcoast/publications_forms/publications/basin_plan/current_version/2016_basin_plan_r3_complete.pdf"

Article 19.07.01 Regulatory Requirements

ADD new Paragraph E. as follows:

"E. See Appendix J for the Biological Survey for the project."

Article 19.08.01 Regulatory Requirements

ADD new Paragraph E. as follows:

"E. See Appendix J for the Biological Survey for the project."

Article 19.09 Sensitive Plants and Vegetation

ADD new Paragraph B. as follows:

"B. See Appendix K for the Botanical Survey for the project."

Article 21.01.02 Description of Bid Items

DELETE Paragraph EEE in its entirety.

TECHNICAL PROVISIONS

Article 23.05. Pipeline Dewatering

REPLACE Paragraph 1.01.A.3. with:

"3. Pipeline dewatering will be initiated by the District at the End Date of Milestone 1, following the completion of Lockout/Tagout procedures. Contractor's dewatering

activities shall commence at the Start Date of Milestone 2 and be complete by the State Date of Internal Pipeline Visual & EM Inspection.

See Special Provisions Article 12.03 – 'Contract Time(s)' for the Milestone Completion and Schedule of Work information."

Article 31.01. General Piping Requirements

REPLACE Paragraph 1.04. with:

"A. The Contractor will provide the equipment, materials, and resources to dewater the pipeline.

See Technical Provisions Article 23.05 – Pipeline Dewatering."

Article 42.01. Contact and Pressure Grouting

DELETE Article 42.01. in its entirety.

APPENDICES

REPLACE Appendix B – Contractor Safety Qualification Packet with:

"Contractor Safety Qualification Packet" **(ATTACHMENT C)**

ADD new Appendix I – Biological Opinion for the 2016 Pacheco Conduit Maintenance Project (15-059) **(ATTACHMENT D)**

ADD new Appendix J – Biological Memorandum – Pacheco Pipeline Rehabilitation Project **(ATTACHMENT E)**

ADD new Appendix K – Botanical Survey of Pacheco Conduit, Vaults 2-42 Memorandum **(ATTACHMENT F)**

MAP AND CONSTRUCTION PLAN

DRAWINGS

REVISE the following three (3) Drawing Sheets **(ATTACHMENT G)**

Drawing Sheets: E-118-E-120

GENERAL QUESTIONS AND RESPONSES

QUESTION 1. The Specs call for contact grouting at existing Weko-seals. Please provide quantity and locations of existing Weko-seals.

RESPONSE 1. This contact grouting work at existing Weko-seals has been removed. Article 42.01 - Contact and Pressure Grouting' has been removed from the Project Specification per Addendum 2.

QUESTION 2. Are there any known critical habitat areas within the construction zone that will require monitoring?

RESPONSE 2. Yes, there are known critical habitats in the project area.

The project area is located in critical habitat for the federally threatened California red-legged frog (Rana draytonii) and the Central California Distinct Population Segment of the California tiger salamander (Central California tiger salamander) (Ambystoma californiense). The District assumes some level of presence of these species in the project area and the Contractor shall be required to perform daily site checks with rain events adding to risk of contact.

As discussed above, identified conditions and avoidance and minimization measures in the Santa Clara Valley Habitat Plan (SCVHP) would be required, as well as compliance with the *San Felipe Division Operation and Maintenance Biological Opinion (O & M Biological Opinion)*. Please see Special Provisions Article 18 – PERMITS AND REGULATIONS for more information on the SCVHP.

Conditions from the (SCVHP) and the *O & M Biological Opinion* identify the need to conduct initial reconnaissance and/or presence-absence surveillance for other covered species prior to site occupation. If these conditions and avoidance and minimization measures in the SCVHP and the *O & M Biological Opinion* are implemented, take of the California red-legged frog and Central California tiger salamander are authorized through the SCVHP's incidental take permit (Fish and Wildlife Permit No.: TE-94345AO).

QUESTION 3. Are any bird exclusion devises currently in place or will any be in place prior to construction that the contractor will have to remove?

RESPONSE 3. There are no bird exclusion devices currently in place nor will be in place prior to construction that the contractor will be required to remove.

QUESTION 4. Is there documentation (e.g. biological assessment) of existing biological resources (ACOE jurisdictional waters, other waters, wetlands, riparian habitat, vernal pools, serpentine, rare plants, steelhead, CRLF, FYLF,

CTS, WPT, tri-colored blackbird, least Bell's vireo, SJ kitfox) along the conduit, including staging areas and access points??

RESPONSE 4. Please see attached biological technical memorandum, the botanical survey memorandum, and the biological opinion (ATTACHMENTS D through F), which were conducted by District staff.

QUESTION 5. If so, what level of effort has been performed to document these existing biological resources?

RESPONSE 5. Please see attached biological technical memorandum, the botanical survey memorandum, and the biological opinion (ATTACHMENTS D through F), which were conducted by District staff.

QUESTION 6. Has the District identified available mitigation/conservation banking credits for the event that wetlands or other sensitive resources are impacted/displaced?

RESPONSE 6. The project is a covered activity under the Santa Clara Valley Habitat Plan (SCVHP). The District has paid all applicable development fees to the SCVHP and is required to implement applicable conditions and avoidance and minimization measures within the project area, which are identified in Appendix D and in the Biological Opinion prepared by U.S. Fish and Wildlife Service included in this Addendum No. 2.

QUESTION 7. In terms of the Carbon Fiber Reinforcement Repair work, please clarify the dimensions of a section.

RESPONSE 7. The pipe section length is up to 25 feet in length on the Pacheco Conduit and the Santa Clara Conduit.

QUESTION 8. Paragraph 14.16.02.F. of Section 14 (Special Requirements) states Subcontractors are to carry the same coverages indicated for the Prime Contractor. Some of these coverages (e.g. Builder's Risk) are not appropriately carried by a Subcontractor or (e.g. $5M liability, auto coverages) are not possible for a small business to acquire. Please review the various policies required for Subcontractors and further consider reducing the liability, auto coverages.

RESPONSE 8. Builders Risk is not required for subcontractors. General Liability requirements for subcontractors are the same as for the general contractor or they may be insured under the general contractor's policy.

QUESTION 9. On Bid Form 4 (Small Business Outreach Program: Instructions and Compliance Document), for Example #2 it is unclear how the $587,000 is the new apparent low bid. Please clarify.

RESPONSE 9. The Preference is Calculated by subtracting the appropriate percent of the low **Base Bid** (Base Bid does not include Supplemental Bid Items or Additive/ Deductive Bid Items) from the qualifying firm's Total Bid. Example 2 shows the Supplemental Bid Items being subtracted from the Total Bid before the preference is calculated.

QUESTION 10. Please confirm that the District is the Generator for all Hazardous Waste pre-existing on the project site and will sign all associated Manifests accordingly.

RESPONSE 10. To the District's knowledge, hazardous waste is not present along the Pacheco Conduit or Santa Clara Conduit. If hazardous waste is found, the District will sign the associated Manifests.

QUESTION 11. Please specifically define each of the elements of support that the District has agreed that the Contractor will perform for the (a) the Third-Party Inspection Contractor and (b) the Third-Party Fiber Installation Contractor?

RESPONSE 11. Information regarding the Third Party Electromagnetic Inspection Contractor can be found in:

-Special Provisions Article 12.01.F.3 - Milestone 2
-Technical Provisions Article 31.07

Information regarding the Third Party Acoustic Fiber Installation Contractor can be found in:

-Special Provisions Article 12.01.F.3 - Milestone 3
-Special Provisions Article 15.03.02 Coordination with Others
-Technical Provisions Article 31.07
-Further information of the AFO assemblies are in the G-sheets of the Project Drawings. Details of the AFO assemblies are in the SP-sheets of the Project Drawings

Section 1.01. in Technical Provisions Article 31.07 provides a summary of support from the Contractor for the Electromagnetic Inspection and the Acoustic Fiber Installation. Parts and materials specific for the Electromagnetic Inspection and the Acoustic Fiber Installation (i.e.: electromagnetic tool cart, acoustic fiber) are provided by the third party.

QUESTION 12. Drawing sheet SP-17 shows details for access gates and fencing. Where are the locations of the access gates and fencing?

RESPONSE 12. The expected locations of the access gates and fencing can be found under the Milestone 1 work.

See Special Provisions Article 12.01 – 'Summary of Work' for the Milestone information."

THIS ADDENDUM NO.2, WHICH CONTAINS 10 PAGES AND 7 ATTACHMENTS, IS ATTACHED TO AND IS A PART OF THE SPECIFICATIONS AND CONTRACT DOCUMENTS FOR THIS PROJECT.

_____ Date: 7.21.17

Tim Bramer, P.E. acting for
Katherine Oven, P.E.
Deputy Operating Officer
Water Utility Capital Division

Enclosures:

1. ATTACHMENT A – BID FORM NO.1 PROPOSAL FORM AND BID ITEMS (REV 2)
2. ATTACHMENT B – BID FORM NO. 4 – SMALL BUSINESS OUTREACH PROGRAM: INSTRUCTIONS AND COMPLIANCE DOCUMENT (REV 1)
3. ATTACHMENT C – SPECIFICATIONS APPENDIX B – CONTRACTOR SAFETY QUALIFICATION PACKET
4. ATTACHMENT D – SPECIFICATIONS APPENDIX I - BIOLOGICAL OPINION FOR THE 2016 PACHECO CONDUIT MAINTENANCE PROJECT (15-059)
5. ATTACHMENT E – SPECIFICATIONS APPENDIX J - BIOLOGICAL MEMORANDUM – PACHECO PIPELINE REHABILITATION PROJECT
6. ATTACHMENT F – SPECIFICATIONS APPENDIX K - BOTANICAL SURVEY OF PACHECO CONDUIT, VAULTS 2-42 MEMORANDUM
7. ATTACHMENT G – REVISED DRAWING SHEETS E-118-E-120

PACHECO CONDUIT INSPECTION AND REHABILITATION PROJECT
ADDENDUM NO. 2

ATTACHMENT A

BID FORM NO.1 PROPOSAL FORM AND BID ITEMS
(REV 2)

Project No. 91214001 & 95084002
Contract No. C0629

This page intentionally left blank.

Proposal and Bid Items

*This form must be completed in **ink** and changes must be **initialed**.*

Honorable Board of Directors
Santa Clara Valley Water District (District)

Pursuant to, and in compliance with, the Notice to Bidders and the Contract Documents, relating to the **PACHECO CONDUIT INSPECTION AND REHABILITATION PROJECT**, the undersigned Bidder having become thoroughly familiar with the terms and conditions of the Contract Documents and with local conditions affecting the performance and costs of the Work and having fully inspected the Work site in all particulars, hereby proposes and agrees to fully perform the Work, including providing any and all labor and materials and performing all Work required to construct and complete said Work within the contract time stated and in accordance with the requirements of the Contract Documents, for the following sum of money.

The undersigned Bidder agrees to complete all the Work within **176** calendar days from the first chargeable day of the Contract, as stated in the Notice to Begin Work. The Bidder agrees to enter into a Contract with the District and provide the required bonds and insurance in accordance with the Instructions to Bidders, Contract Bonds, paragraph #21 and Execution of Contract, paragraph #22. If the Bidder fails to meet these requirements within the time specified in the Instruction to Bidders, Failure to Execute Contract, paragraph #23, the Bidder's security accompanying this Proposal may be forfeited and become the property of the District. No Contract exists until all Contract bonds and insurance documents have been accepted by the District.

TOTAL BID: $ _____

Bidder acknowledges receipt of the following Addenda to the Bid Documents:
Addenda are posted online at www.valleywater.org/Programs/Construction.aspx.

☐ **NO** Addenda received

☐ Addenda received as follows:

Addendum No. _____ Date _____ Addendum No. _____ Date _____
Addendum No. _____ Date _____ Addendum No. _____ Date _____

Failure to acknowledge receipt of an Addendum on the Bid Form is not, in itself, cause for withdrawal or rejection of Bid, if it can be established that Bidder did, in fact, receive such Addendum prior to Bid opening.

The undersigned Bidder has read and, understands, and will comply with, each and all of the requirements specified in these Bid Documents. This Proposal must be signed by an authorized representative of the Bidder with the authority to bind the Bidder.

BIDDER'S COMPANY INFORMATION	
NAME:	ADDRESS:
CONTRACTOR'S CALIFORNIA LICENSE NUMBER: DATE OF EXPIRATION: LICENSE CLASSIFICATION(S):	
PHONE NO.: ( )	FAX NO.: ( )
EMAIL ADDRESS:	

SIGNATURE BLOCK (Signature Block must be completed in *ink* and changes must be *initialed*.)	
Bidder's Signature:	Date:
Bidder's Name and Title (Print):	

*This form must be completed in **ink** and changes must be **initialed**.*

SECTION A - BASE BID

ITEM NO.	DESCRIPTION OF ITEM	APPROXIMATE QUANTITY / UNIT	UNIT PRICE	TOTAL
1	Mobilization	Lump Sum / Lump Sum		
2	Work as Specified for Pipeline Dewatering	Lump Sum / Lump Sum		
3	Work as Specified for PAC PSV @ Station 481+95—Sectionalizing Valve Vault	Lump Sum / Lump Sum		
4	Work as Specified for PAC 2 @ Station 483+10—10” Blowoff	Lump Sum / Lump Sum		
5	Work as Specified for PAC 3 @ Station 484+97—8” ARV	Lump Sum / Lump Sum		
6	Work as Specified for PAC 4 @ Station 485+85—10” Blowoff	Lump Sum / Lump Sum		
7	Work as Specified for PAC 5 @ Station 487+33—8” ARV	Lump Sum / Lump Sum		
8	Work as Specified for PAC 6 @ Station 489+72—20” Blowoff	Lump Sum / Lump Sum		
9	Work as Specified for PAC 7 @ Station 490+60—8” ARV	Lump Sum / Lump Sum		

ITEM NO.	DESCRIPTION OF ITEM	APPROXIMATE QUANTITY / UNIT	UNIT PRICE	TOTAL
10	Work as Specified for PAC 8 @ Station 492+19—10” Blowoff	Lump Sum / Lump Sum		
11	Work as Specified for PAC 9 @ Station 495+19—10” ARV	Lump Sum / Lump Sum		
12	Work as Specified for PAC 10 @ Station 498+39—10” Blowoff	Lump Sum / Lump Sum		
13	Work as Specified for PAC 11 @ Station 500+78—8” ARV	Lump Sum / Lump Sum		
14	Work as Specified for PAC 12 @ Station 504+28—20” Blowoff	Lump Sum / Lump Sum		
15	Work as Specified for PAC 13 @ Station 504+81—8” ARV	Lump Sum / Lump Sum		
16	Work as Specified for PAC 14 @ Station 506+22—10” Blowoff	Lump Sum / Lump Sum		
17	Work as Specified for PAC 15 @ Station 512+14—8” ARV	Lump Sum / Lump Sum		
18	Work as Specified for PAC 16 @ Station 513+02—10” Blowoff	Lump Sum / Lump Sum		

ITEM NO.	DESCRIPTION OF ITEM	APPROXIMATE QUANTITY / UNIT	UNIT PRICE	TOTAL
19	Work as Specified for PAC 17 @ Station 514+80—10” ARV	Lump Sum / Lump Sum		
20	Work as Specified for PAC 18 @ Station 519+81—10” Blowoff	Lump Sum / Lump Sum		
21	Work as Specified for PAC 19 @ Station 521+18—8” ARV	Lump Sum / Lump Sum		
22	Work as Specified for PAC 20 @ Station 521+33—20” Blowoff	Lump Sum / Lump Sum		
23	Work as Specified for PAC 21 @ Station 523+04—10” ARV	Lump Sum / Lump Sum		
24	Work as Specified for PAC 22 @ Station 524+02—10” Blowoff	Lump Sum / Lump Sum		
25	Work as Specified for PAC 23 @ Station 524+51—8” ARV	Lump Sum / Lump Sum		
26	Work as Specified for PAC 24 @ Station 527+09—10” Blowoff	Lump Sum / Lump Sum		
27	Work as Specified for PAC 25 @ Station 531+07—8” ARV	Lump Sum / Lump Sum		

ITEM NO.	DESCRIPTION OF ITEM	APPROXIMATE QUANTITY / UNIT	UNIT PRICE	TOTAL
28	Work as Specified for PAC 26 @ Station 534+11—10” Blowoff	Lump Sum / Lump Sum		
29	Work as Specified for PAC 27 @ Station 535+39—8” ARV	Lump Sum / Lump Sum		
30	Work as Specified for PAC 28 @ Station 538+73—20” Blowoff	Lump Sum / Lump Sum		
31	Work as Specified for PAC 29 @ Station 543+28—8” ARV	Lump Sum / Lump Sum		
32	Work as Specified for PAC 30 @ Station 76+79—10” Pumpout	Lump Sum / Lump Sum		
33	Work as Specified for PAC 31 @ Station 79+31—8” ARV	Lump Sum / Lump Sum		
34	Work as Specified for PAC 32 @ Station 88+60—20” Blowoff	Lump Sum / Lump Sum		
35	Work as Specified for PAC 33 @ Station 91+70—8” ARV	Lump Sum / Lump Sum		
36	Work as Specified for PAC 34 @ Station 102+89—20” Blowoff	Lump Sum / Lump Sum		

ITEM NO.	DESCRIPTION OF ITEM	APPROXIMATE QUANTITY / UNIT	UNIT PRICE	TOTAL
37	Work as Specified for PAC 35 @ Station 103+93—8” ARV	Lump Sum / Lump Sum		
38	Work as Specified for PAC 36 @ Station 108+37—10” Pumpout	Lump Sum / Lump Sum		
39	Work as Specified for PAC 37 @ Station 112+54—8” ARV	Lump Sum / Lump Sum		
40	Work as Specified for PAC 38 @ Station 119+77—10” Pumpout	Lump Sum / Lump Sum		
41	Work as Specified for PAC 39 @ Station 123+28—8” ARV	Lump Sum / Lump Sum		
42	Work as Specified for PAC 40 @ Station 123+94—20” Blowoff	Lump Sum / Lump Sum		
43	Work as Specified for PAC 41 @ Station 126+02—8” ARV	Lump Sum / Lump Sum		
44	Work as Specified for PAC 42 @ Station 131+45—10” Pumpout	Lump Sum / Lump Sum		
45a	Work as Specified for PAC BIF @ Station 132+40—Bifurcation Valve Vault	Lump Sum / Lump Sum		

ITEM NO.	DESCRIPTION OF ITEM	APPROXIMATE QUANTITY / UNIT	UNIT PRICE	TOTAL
45b	**Work as Specified for PAC BIF @ Station 132+40—Bifurcation Valve Vault, Electrical and Control Systems Only**	**Lump Sum / Lump Sum**		
46	Work as Specified for SCC 2 @ Station 3+77—10” Pumpout	Lump Sum / Lump Sum		
47	Work as Specified for SCC 3 @ Station 5+85—20” Blowoff	Lump Sum / Lump Sum		
48	Work as Specified for SCC 4 @ Station 11+26—20” Blowoff	Lump Sum / Lump Sum		
49	Work as Specified for SCC 5A @ Station 12+17—28” Nozzle	Lump Sum / Lump Sum		
50	Work as Specified for SCC 5 @ Station 15+00—10” ARV & 6” ARV	Lump Sum / Lump Sum		
51	Work as Specified for SCC 6 @ Station 15+18—4” ARV	Lump Sum / Lump Sum		
52	Work as Specified for SCC 7 @ Station 30+74—10” ARV	Lump Sum / Lump Sum		
53	Work as Specified for Coating and Painting	Lump Sum / Lump Sum		

ITEM NO.	DESCRIPTION OF ITEM	APPROXIMATE QUANTITY / UNIT	UNIT PRICE	TOTAL
54	Work as Specified for Support for Internal Pipeline Work	Lump Sum / Lump Sum		
55	Work as Specified for AFO Installation Support	Lump Sum / Lump Sum		
TOTAL BASE BID (Section A Subtotal)				

*This form must be completed in **ink** and changes must be **initialed**.*

SECTION B: SUPPLEMENTAL BID ITEMS These Bid items may or may not be required. They may be deleted entirely or in part, by deductive change order(s), at the sole discretion of the District.				
ITEM NO.	**DESCRIPTION OF ITEM***	**APPROXIMATE QUANTITY / UNIT**	**UNIT PRICE**	**TOTAL**
56	Access Gate Installation – SUPPLEMENTAL WORK	6 / Gates		
57	~~**Internal Concrete Repair for Pacheco Conduit, Santa Clara Conduit and Santa Clara Tunnel – SUPPLEMENTAL WORK**~~	~~**250 / Linear Ft.**~~		
58	Carbon Fiber Reinforcement for PCCP – SUPPLEMENTAL WORK	4 / Sections		
59	Cement Mortaring for Internal Pipeline Repairs – SUPPLEMENTAL WORK	40 / Sq. Ft		
60	Welding for Internal Pipeline Repairs – SUPPLEMENTAL WORK	1000 / Linear in.		
61	Internal Pipeline Debris Removal Work – SUPPLEMENTAL WORK	40 / Cu.Ft		
62	Internal Pipeline Weko-Seal Installation – SUPPLEMENTAL WORK	3 Seals / Per Seal		
	TOTAL SUPPLEMENTAL BID	Section B Subtotal		
TOTAL BID (Section A Subtotal + Section B Subtotal)				

This page intentionally left blank.

PACHECO CONDUIT INSPECTION AND REHABILITATION PROJECT ADDENDUM NO.2

ATTACHMENT B

BID FORM NO. 4 – SMALL BUSINESS OUTREACH PROGRAM: INSTRUCTIONS AND COMPLIANCE DOCUMENT (REV 1)

Project No. 91214001 & 95084002
Contract No. C0629

This page intentionally left blank.

*(REV 1)This form must be completed in **ink** and changes must be **initialed**.*

PART I: GENERAL

A. The Santa Clara Valley Water District (District) has a Small Business Outreach Program, which establishes a thirty (30) percent minimum participation goal. To be eligible for award of a Contract, each Bidder must comply with the District's Small Business Outreach Program requirements, be a responsible Bidder, and submit a responsive bid.

To be counted towards meeting the District's Small Business Outreach participation goal, Small/Micro Business must be certified by California Department of General Services. http://www.pd.dgs.ca.gov Bidders are encouraged to use the services and assistance of the California Department of General Services.

B. The District's program applies the following definitions:

1. **Small/Micro Business**—defined by California Code of Regulations Section 1896.12. Eligibility for Certification as a Small Business.

"a. To be eligible for certification as a small business, a business must meet all of the following qualifying criteria:

1. It is independently owned and operated; and

2. The principal office is located in California; and

3. The officers of the business in the case of a corporation; officers and/or managers, or in the absence of officers and/or managers, all members in the case of a limited liability company; or the owner(s) in all other cases are domiciled in California; and

4. It is not dominant in its field of operation(s), and

5. It is either:

A. A business that, together with affiliates, has 100 or fewer employees, and average annual gross of fourteen million dollars ($14,000,000) or less as averaged for the previous three tax years, as adjusted by the department pursuant to Government Code Section 14837 (d) (3); or

B. A manufacturer as defined herein that, together with affiliates, has 100 or fewer employees.

b. To be eligible for designation as a microbusiness, a business must meet all the qualifying criteria in sub paragraph (a), and in addition, must be either:

*This form must be completed in **ink** and changes must be **initialed**.*

1. A business that, together with all affiliates, has annual gross of three million five hundred thousand dollars ($3,500,000) or less receipts as averaged for the previous three tax years, as adjusted by the department pursuant to Government Code Section 14837 (d) (3); or

2. A manufacturer as defined herein that, together with all affiliates, has 25 or fewer employees."

2. A Small Business **Joint Venture**—is defined in the California Code of Regulations, Definitions, section 1896.4.

   "n. means an association of businesses established by written agreement to engage in and carry out a single business venture for joint profit, for which purpose they combine their efforts, property, money, skills and/or knowledge."

   1896.12.c. "Joint ventures must be certified on a bid-by-bid basis. The joint venture shall not be subject to the average annual gross receipts and employee limits imposed by this subchapter. However, each individual business participating in the joint venture must be certified as a small business."

   Note: Joint Ventures formed at the prime contractor level are subject to the requirements of the Standard Provisions, Change in Contract Time(s), Article 3.08.

PART II: COMPLIANCE WITH SMALL BUSINESS OUTREACH PROGRAM REQUIREMENTS

Each Bidder must complete this Bid Form and return it with the Bid.

The undersigned Bidder complies with the District's Small Business Outreach Program as indicated below. **At least one box should be checked.**

☐ 1. Bidder is qualified for a Small Business preference because it is a Certified Small Business.

☐ 2. Bidder is qualified for a Small Business preference because it has subcontracted:

☐ 30% ☐ 40% ☐ 50% of this job to Certified Small Businesses.

☐ 3. Bidder has made a Good Faith Effort to solicit Small/Micro Business participation as demonstrated by documentation to be submitted by **10 a.m.** on the 2nd day after Bid opening. Timely submission of these Forms is considered **material** by the District. Submission of documentation is only required from the firms submitting the three apparent low bids (see **REQUIREMENTS FOR DEMONSTRATING GOOD FAITH EFFORT**, **Part IV.** herein for documentation requirements).

☐ 4. Bidder will perform all the work without using subcontractors and is, therefore, exempt from demonstrating Good Faith Effort.

*This form must be completed in **ink** and changes must be **initialed**.*

PART III: CALCULATING THE SMALL BUSINESS PREFERENCE

A. Bidders receive a preference based on the following criteria:

1. Certified Small/Micro Business Bidders receive a 5 percent preference.

2. Non-Small/Micro Business Bidders with Small/Micro Business participation of:

- 30% to 39% receive a 3% preference.
- 40% to 49% receive a 4% preference.
- 50% to 100% receive a 5% preference.

B. For purposes of calculating the Small Business preference, only the Base Bid amount (which excludes Supplemental and Additive/Deductive Bid Items) will be used.

The preference is calculated by subtracting the appropriate percent (3%, 4%, or 5%) of the low Base Bid from the qualifying firm's Total Bid.

Example 1:

Apparent low Bid (not a Small Business)	$600,000	Small/Micro Business Bid	$615,000
Total of Supplemental Bid Items		5% Small Business Preference*	-$28,000
Base Bid	$560,000	New apparent low bid	$587,000

*Small Business preference amount: $560,000 x .05 = $28,000

Example 2:

Apparent low Bid (not a Small Business)	$600,000	Small/Micro Business Bid	$615,000
Total of Supplemental Bid Items	-$40,000	5% Small Business Preference*	-$28,000
Base Bid	$560,000	New apparent low bid	$587,000

*Small Business preference amount: $560,000 x .05 = $28,000

C. The preference is only applied to determine the low bid. The priority for applying the preference will be in the following order:

1. Micro Business submitting the lowest bid.

2. Small Business submitting the lowest bid.

3. Non-Small Business, subcontracting with the highest percent of Micro Business submitting the lowest bid.

4. Non-Small Business subcontracting with the highest percent of Small Business submitting the lowest bid.

PART IV: REQUIREMENTS FOR DEMONSTRATING GOOD FAITH EFFORT

Bidders not meeting the minimum participation goal of 30 percent must submit documentation demonstrating that a Good Faith Effort was made. For further information and/or assistance, contact the Capital Program Planning and Analysis Unit Manager at (408) 630-2682.

No substitution of a Small/Micro Business listed on the Affidavit will be made at any time without the written consent of the District. Substitution requests will only be considered for the reasons stated in Public Contract Code §4107. If a Small/Micro Business subcontractor/supplier substitution is requested, the Contractor must make a Good Faith Effort to replace the original firm with another Small Business subcontractor/supplier. Written documentation of such efforts must accompany each substitution request.

A. The Bidder(s) submitting the three apparent low bids must provide documentation of Good Faith Effort by **10 a.m.** on the 2nd day after the Bid opening. Timely submission of these Forms is considered **material** by the District.

B. The District strongly recommends compliance with all 8 items listed below.

C. All documentation must be specific with verifiable names, addresses, phone numbers, dates, etc., to demonstrate that the Bidder made a Good Faith Effort to obtain Small Business participation in accordance with the criteria listed below and prior to the time bids are opened.

1. Attend any pre-bid meeting conducted by the District, for any project, where Bidders are informed of Small Business program requirements held within the previous 6 months prior to the Bid opening.

2. Efforts made to select portions of the work proposed to be performed by small businesses in order to increase the likelihood of achieving the participation goal (including, where appropriate, breaking down contracts into economically feasible units to facilitate Small Business participation).

3. Advertise, not less than 10 calendar days before the date bids are due, in one or more daily or weekly general circulation media, trade association publications, minority or trade oriented publications, trade journals, or minority/women focused media, soliciting bids from subcontractors/suppliers/vendors for participation in the project.

4. Written documentation that the Bidder contacted a reasonable number of DGS-certified Small Businesses to solicit interest for a specific portion(s) of the project in sufficient time to allow the Small Businesses to obtain information on the project and consider bidding on work, which is to be performed by other than the prime contractor.

   Verbal solicitations will be accepted, provided they are followed by written communication confirming the offer to Bid and are specific as to names, scope of work, etc.

5. Follow up initial solicitations of interest by contacting the Small Business to determine with certainty if they are interested in performing specific items of the project.

6. Efforts made to provide interested small businesses with adequate information about the plans, specifications, and requirements of the project.

7. Efforts made to negotiate in good faith with interested Small Businesses and not rejecting Small Businesses as unqualified without sound reasons. Provide a list of all Small Businesses submitting a Bid that was not used stating the reason for rejection.

8. Efforts made to assist interested Small Businesses in securing bonding, lines of credit, or insurance. This may include referral to local agencies specifically set up for this purpose.

PART V: SMALL/MICRO BUSINESS ENTERPRISE UTILIZATION REPORTING REQUIREMENT

Contractor payments to Small/Micro Business Enterprise (SBE) providing labor, services, materials, equipment, or supplies, including subcontractors, will be monitored monthly throughout the project. The Contractor is required to submit a monthly and final SBE Utilization Report with the request for progress payments. Forms and instructions can be downloaded from the District's website at www.valleywater.org/Programs/Construction.aspx. Sample forms and instructions are included in the Contract Documents, Appendix A.

*This form must be completed in **ink** and changes must be **initialed**.*

AFFIDAVIT

Small/Micro Business Subcontractor List

The Bidder must complete this Affidavit listing the names of each Certified Small/Micro Business, at any tier, providing labor, services, materials, equipment, or supplies including subcontractors.

Contingent upon award of a Contract for:

PACHECO CONDUIT INSPECTION AND REHABILITATION PROJECT
(Name of Project)

_____ will contract with the following small/micro firms:
(Name of Contractor)

	NAME AND ADDRESS	DGS CERTIFICATION NO.	TYPE OF WORK	AMOUNT OF SUBCONTRACT/ PURCHASE
1.				
2.				
3.				
4.				
5.				

Small/Micro Business participation in this Contract is $_____ or _____% of the total Bid.

I declare, under penalty of perjury, that the above information is true and correct.

SIGNATURE BLOCK (Signature Block must be completed in *ink* and changes must be *initialed*.)	
Bidder's Signature:	Date:
Bidder's Name and Title (Print):	

PACHECO CONDUIT INSPECTION AND REHABILITATION PROJECT ADDENDUM NO.2

ATTACHMENT C

SPECIFICATIONS APPENDIX B – CONTRACTOR SAFETY QUALIFICATION PACKET

Project No. 91214001 & 95084002
Contract No. C0629

This page intentionally left blank.

Downloaded or printed copies are for reference only. Verify this is the current version prior to use. See the District website for released version.

COMPANY DATA

1. **Company Name**: _____

   Subsidiary/Division of: _____

   Local Address: _____

   Headquarters Address: _____
   (If different from local)

2. **Contact Name/Title**: _____

   Telephone No.: _____

   Email Address: _____

   FAX No.: _____

   Local Address: _____

3. **Form of Company Ownership**: ☐ Sole Proprietorship

   ☐ Partnership

   ☐ Corporation State: _____

   Date Company Established: _____

   Name or Names Company Has Previously Operated Under:

4. **Total No. of Employees**: _____

COMPANY HISTORY

1. **Job History With Santa Clara Valley Water District (Give date and brief description for past three years)**:

2. **Please provide references for your last three jobs of similar type and scope as the work proposed by Santa Clara Valley Water District**:

	COMPANY	CONTACT	PHONE NO.
1)			
2)			
3)			

Briefly describe the type and scope of work performed:

1) _____

2) _____

3) _____

WORK TO BE PERFORMED

1. **Briefly describe the type and scope of work to be performed**:

1) _____

2) _____

3) _____

2. **Identify any hazardous work activities to be performed (confined space, hot work, lockout/tagout, etc.)**:

_____

3. **Will contractors be exposed to hazardous materials/waste (asbestos, lead, mercury, etc.)**? ☐ Yes ☐ No

4. **Identify work location(s)**: _____

5. **Identify SCVWD Project Manager**: _____

6. **Identify expected start and end dates**: _____

SECTION A. WORKERSô COMPENSATION INSURANCEð EXPERIENCE MODIFICATION RATE (EMR)

1. Please obtain from your insurance agent/broker/carrier your intrastate EMRs for the last three rating periods. If you do not have an intrastate rating, obtain your interstate EMRs. Then complete the following data and check the appropriate box for intrastate or interstate EMR.

	POLICY YEAR	MODIFICATION RATE
Current EMR		
1 Year Ago		
2 Years Ago		
Rating Type: ☐ Intrastate ☐ Interstate		

By initialing here, I certify that this company does not have an EMR: _____
(You must submit a copy of your companyôs Loss Runs for the last three years if your company does not have an EMR.)

Is your company self-insured for WorkersôCompensation Claims?

☐ Yes. If yes, please attach a copy of the latest Annual Report to the State of California Department of Industrial Relations and/or State of California Certificate of Self-Insurance.

☐ No

2. Anniversary Rating Date: _____ **Rating Bureau File No.**: _____

3. Name of Your Companyôs WorkersôCompensation Carrier: _____

SECTION B. OSHA/LOST WORKDAY INCIDENCE RATES

To answer the following questions, utilize data obtained from your companyôs OSHA 300 ñLog and Summary of Occupational Injuries and Illnesses,ò or Workersô Compensation Loss Run (if your company has 10 or fewer employees).

ALL COMPANIES HAVE DATA TO REPORT, AND MUST COMPLETE THIS SECTION.

1. **Record your Industry Comparison Information number (NAICS Code)**: _____
(The North American Industry Classification System [NAICS] has replaced the U.S. Standard Industrial Classification [SIC] system.) **Provide data only for the years identified below.** **http://www.naics.com/search.htm**

2. **What was your company-wide OSHA Total Case Incident Rate* (recordable cases)?**

YEAR	NO. OF CASES	CO. HOURS ***	RATE
2012			
2013			
2014			

3. **What was your company-wide Lost Workday Case Incidence Rate** (recordable cases with lost workdays or restricted duty)?**

YEAR	NO. OF CASES	CO. HOURS ***	RATE
2012			
2013			
2014			

INFORMATION TO AID IN COMPLETING SECTION B. 2 AND 3:

* OSHA Total Case Incidence Rate = $\frac{\text{Total No. of Recordable Cases x 200,000}}{\text{Company Man-Hours}}$

** Lost Workday Case Incidence Rate: = $\frac{\text{No. of Lost Workday Cases x 200,000}}{\text{Company Man-Hours}}$

*** Co. Hours = Hours worked by all employees on the Company payroll in the applicable calendar year.

- Do not use the number of lost workdays in these three calculations.
- Rates are not a ñ%,ò nor should the number be similar to ñ0.00024.ò
- To verify your calculations for a given year, check your math as follows:
  Lost Workday Case Rate + No Lost Workday Case Rate = Total Case Incidence Rate

SECTION C. OSHA CITATION (VIOLATION) HISTORY

Has your company received any ñserious,òñwillful,òñrepeat,òor ñfailure to abateòOSHA violations (citations) within the past sixty (60) months, beginning immediately prior to submittal of this questionnaire? This question ***includes*** such citations if they have been appealed or contested, but have not yet been resolved. If yes, check ñYesòbelow and submit copies of all citations and descriptions of abatement actions, your company Injury and Illness Prevention Program and Code of Safe Practices, ***and*** your OSHA 300 Log and Summaries for each of the last three years. Provide a completed OSHA form 160 or 161 for each citation identified.

☐ Yes. If yes, list total number of citations (violations) by type per year in the table below.
☐ No.

YEAR	SERIOUS	WILLFUL	REPEAT	FAILURE TO ABATE	TOTAL

SECTION D. SAFETY POLICIES AND PROCEDURES (18 QUESTIONS)

NO.	QUESTIONS	YES	NO	NA	POINTS
1.	Injury and Illness Prevention Program. Does your company have an effective, written Injury and Illness Prevention Program (IIPP) in accordance with 8CCR Ä1509 and Ä3203? [LC Ä6401.7]	☐	☐	☐	20
2.	Does your company have a safety policy statement endorsed by top management? [LC Ä6401]	☐	☐	☐	2
3.	Does your on-site safety representative have sufficient authority to implement changes and implement corrective action? [LC Ä6401.7(a)(7)]	☐	☐	☐	2
4.	Does your company have a disciplinary action program that includes provisions for acting on safety and health issues of your employees (and subcontractors, if applicable), and is the program enforced? [LC Ä6401.7(a)(6)]	☐	☐	☐	2
5.	Does your company have a safety incentive program effective in reducing occupational injuries and illnesses? [8 CCR Ä3203(a)(2)]	☐	☐	☐	2
6.	Do your company safety and health policies, procedures, and subcontract agreements address minimum safety requirements in accordance with OSHA and Owner requirements for suppliers, and vendors and subcontractors? [LC Ä6401.7(h)]	☐	☐	☐	4
7.	Does your company have a comprehensive Hazard Communication Program that (a) details locations for Material Safety Data Sheets (MSDS) and (b) contains provisions for multi-employer job sites? [8 CCR Ä5194]	☐	☐	☐	10
8.	Do you conduct ongoing job site safety and health inspections, and are the inspection records kept on file and available for review? [LC Ä6401.7(A)(2)]	☐	☐	☐	12
9.	Are the inspection records and written evidence that safety and health concerns have been reviewed and corrective action taken maintained and available for review? [LCÄ6401.7(b) and (D)]	☐	☐	☐	4
10.	Safety Reviews/Hazard Analysis. Are all critical (hazardous) job activities identified and Job Safety Analysisô(JSA, a.k.a. Job Hazard Analysis, or JHA) conducted by your company (and subcontractors, if applicable)? [LCÄ6401.7(A)(5)]	☐	☐	☐	6
11.	Are the procedures for critical (hazardous) job activities written and reviewed with all employees (including subcontractor employees)? [LC 6401.7(a)(5)]	☐	☐	☐	2

NO.	QUESTIONS	YES	NO	NA	POINTS
12.	Accident/Incident Investigation and Analysis. Does your company have a written accident/incident investigation procedure in which: (a) all accidents/incidents (including those of subcontractors, if applicable) are investigated to determine their root cause, and (b) corrective action is taken by site supervision and management, and (c) written investigation and corrective action records are available for review? [8CCR Ä3203(a)(5) and (b)]	☐	☐	☐	4
13.	Are reports completed for ñnear missò incidents that might have caused serious injury, property, or equipment damage? [LC Ä6403(b)]	☐	☐	☐	2
14.	Emergency Response. Does your company have a comprehensive written emergency response plan (i.e., fire, toxic spills, bomb threats, natural disasters, crowd and traffic control, and media relations) for job sites; and do all employees (including subcontractor employees, if applicable) receive project-specific emergency response training? [8 CCR Ä3220(a) and (e)]	☐	☐	☐	4
15.	Substance Abuse Control Program. Does your company have a written Substance Abuse Program? [LC Ä6403]	☐	☐	☐	2
16.	Do you require your subcontractors of all tiers to have a Substance Abuse Program? [LC Ä6403]	☐	☐	☐	2
17.	Employee Training. Does your company ensure that all employees (including subcontractor employees) are trained in accordance with your companyõs written training plan, and (a) are competent to perform the work required, and (b) that job tasks requiring specific training and/or certification are performed by employees having the appropriate training documentation and certificates, and the documentation is maintained and available for review? [LC Ä6401.7(c) and (d)]	☐	☐	☐	10
18.	Is documentation on file and available for review to verify that training and safety meetings for your company (and subcontractors, if applicable) have been completed? [LC Ä6401.7(c) and 8CCR Ä1509(e)]	☐	☐	☐	10
Q#	Explain why answers were checked No or NA.			**Total Points**	

CONTRACTOR CERTIFICATION STATEMENT

NOTE: The Santa Clara Valley Water District reserves the right to request any and all documentation necessary to verify responses submitted in Sections A, B, C, and D of this Contractor Safety Qualification Packet.

I certify that the information contained herein is true and correct to the best of my knowledge and that no attempt has been made to give false, omissive, or misleading information. I further certify that I shall comply with the safety qualification requirements for any and all subcontractors my company shall employ for any Santa Clara Valley Water District project and I certify under penalty of perjury under the laws of the State of California that these subcontractors meet the safety standards and all other Santa Clara Valley Water District requirements prior to contracting with them for use on any Santa Clara Valley Water District project.

If sending the document via e-mail, fill in the ñPrinted/Typedò line with the name of the authorized agent for the company. The document is considered signed and valid if transmitted via the signatories e-mail address.

Signed: _____

Printed/Typed: _____

Title: _____

Date: _____

PACHECO CONDUIT INSPECTION AND REHABILITATION PROJECT ADDENDUM NO.2

ATTACHMENT D

SPECIFICATIONS APPENDIX I - BIOLOGICAL OPINION FOR THE 2016 PACHECO CONDUIT MAINTENANCE PROJECT (15-059)

Project No. 91214001 & 95084002
Contract No. C0629

This page intentionally left blank.

United States Department of the Interior

FISH AND WILDLIFE SERVICE
Sacramento Fish and Wildlife Office
2800 Cottage Way, Suite W-2605
Sacramento, California 95825-1846

In Reply Refer to:
08ESMF00-
2017-F-1724

APR 19 2017

Memorandum

To: Rain L. Emerson, Supervisory Natural Resources Specialist, U.S. Department of Interior, Bureau of Reclamation, Mid-Pacific Region, South-Central California Area Office, Fresno, California

From: Field Supervisor, Sacramento Fish and Wildlife Office, Sacramento, California
Acting

Subject: Formal Consultation on the Santa Clara Valley Water District's (SCVWD) 2016 Pacheco Conduit Maintenance Project (15-059) in Santa Clara County, California (U.S. Bureau of Reclamation (USBR) file number SCC-424, ENV-7.00, San Felipe Division)

This memorandum is in response to the USBR's March 31, 2017, request for initiation of formal consultation with the U.S. Fish and Wildlife Service (Service) on the SCVWD's proposed 2016 Pacheco Conduit Maintenance Project (proposed project) in Santa Clara County, California (USBR file number SCC-424, ENV-7.00, San Felipe Division). Your request was received by the Service on April 3, 2017. At issue are the proposed project's effects on the federally threatened California red-legged frog (*Rana draytonii*) and its designated critical habitat, threatened Central Distinct Population Segment of the California tiger salamander (Central California tiger salamander) (*Ambystoma californiense*) and its designated critical habitat, endangered San Joaquin kit fox (*Vulpes macrotis mutica*), and endangered least Bell's vireo (*Vireo bellii pusillus*). This response is provided under the authority of the Endangered Species Act of 1973, as amended (16 U.S.C. 1531 *et seq.*) (Act), and in accordance with the implementing regulations pertaining to interagency cooperation (50 CFR 402). Critical habitat has been designated for the least Bell's vireo but does not occur within the action area for the proposed project.

The federal action on which we are consulting is the SCVWD performing inspections, conducting routine maintenance, pipeline and tunnel dewatering, and rehabilitating USBR's facilities along approximately seven miles of the Pacheco Conduit in southeastern Santa Clara County, California. The SCVWD maintains the San Felipe facilities (Pacheco Conduit and Tunnel, and Santa Clara Conduit and Tunnel) performing inspections, repair and rehabilitation, as specified in the long-term Operation and Maintenance agreements with USBR. USBR needs to increase the reliability and useful life of the Pacheco Conduit, Santa Clara Conduit, and Santa Clara Tunnel. The Pacheco Pipeline is a segment of the USBR's Central Valley Project, San Felipe Division facility which supplies raw water to the SCVWD in Santa Clara County and the San Benito County Water District in San Benito County. The pipeline transmission system is located in unincorporated Santa Clara County, and the proposed project area generally runs parallel to Highway 152 east of the unincorporated area of Casa de Fruta in southeastern Santa Clara County. Pursuant to 50 CFR 402.12(j), you submitted a biological assessment for our review and requested concurrence with the

findings presented therein. These findings conclude that the proposed project may affect, and is likely to adversely affect the California red-legged frog and its designated critical habitat, Central California tiger salamander and its designated critical habitat, San Joaquin kit fox, and least Bell's vireo.

This biological opinion is based on information provided in: (1) the March 31, 2017, memorandum from USBR requesting formal consultation; (2) the August 2012 *Final Santa Clara Valley Habitat Plan* (http://scv-habitatagency.org/178/Final-Habitat-Plan); (3) various discussions and correspondence among the Service, USBR, and SCVWD; and (4) other information available to the Service.

Description of the Proposed Project

Key components of the proposed project are pipeline dewatering and inspection, described below. The pipeline must be dewatered to inspect internal conditions, repair valves and install on-going monitoring equipment. Dewatering the pipeline includes steps to put the water to beneficial use. The Coyote Pumping Plant will be used to transfer 15.5 million gallons from the Santa Clara Conduit into existing groundwater recharge facilities located in central and northern Santa Clara County. The remaining 26 million gallons will be gravity-drained from the Pacheco Conduit into the ground or into Pacheco Creek and local tributaries of Pacheco Creek through blowoffs. Blowoff and pumpout discharges will be managed by controlling discharge rates (two to four cubic feet per second) to minimize erosion and scour. Water remaining in the low points of the pipeline will be pumped out using small localized pumps. Water will be pumped onto geotextile filter bags or visqueen placed around the vault for erosion protection. Pumpout flows will be directed to either Pacheco Creek, its local tributaries, or overland to soak into the ground.

Pipeline and tunnel inspection activities include visual and sounding inspections of the inside of the pipeline and installation of fiber optic and electromagnetic equipment to allow on-going monitoring of the Pacheco Conduit, a one mile segment of the Santa Clara Conduit and Santa Clara Tunnel. Work crews will access the pipeline through existing in-vault appurtenances and nozzles, utilizing trucks and small lift equipment.

Work crews will access the vault sites via existing all-weather gravel roads and unpaved ranch roads along the conduit between the Pacheco Sectionalizing Valve Vault and the west end of the Santa Clara Tunnel. The roadways are connected by controlled access gates along Highway 152 and Casa De Fruta in Santa Clara County. Local work will be staged at entry/exit points at the vaults for each section of the proposed inspection.

The proposed project will use three staging areas on private property near the intersection of Highway 152 and Casa De Fruta Parkway identified by Assessor's Parcel Numbers (APN) below. These parcels are vacant and previously disturbed: Staging Area 1 (APN 898-20-043) in 0.68 acre of urban-suburban land cover; Staging Area 2 (APN 898-59-002) in 5.14 acres of grain/row crops; and Staging Area 3 (APN 898-59-003) in 5.23 acres of grain/row crops.

The proposed project will occur over a six month period between September 2017 and ending in February 2018. Site preparation work will begin in early September 2017 and end in early October 2017. Dewatering will last about three weeks until the end October 2017. Maintenance activities will occur from the end of October 2017 to the end of December 2017. Site restoration will occur from December 2017 to February 2018.

The proposed project will result in the permanent loss of about 0.10 acre of northern mixed chaparral/chamise chaparral habitat and the temporary disturbance of about 10.37 acres of grain, row crop, hay and pasture, disked/short-term fallowed habitat and 0.68 acre of urban-suburban land cover.

Conservation Measures

The proposed project is a "covered project" under the Santa Clara Valley Habitat Plan (SCVHP) and will implement the following conditions from the SCVHP:

1. Condition 1. Avoid Direct Impacts on Legally Protected Plant and Wildlife Species;

2. Condition 3. Maintain Hydrologic Conditions and Protect Water Quality;

3. Condition 5. Avoidance and Minimization Measures for In-Stream Operations and Maintenance;

4. Condition 12. Wetland and Pond Avoidance and Minimization;

5. Condition 14. Valley Oak and Blue Oak Woodland Avoidance and Minimization;

6. Condition 16. Least Bell's Vireo;

7. Condition 17. Tricolored Blackbird;

8. Condition 18. San Joaquin Kit Fox;

9. Condition 20. Avoid and Minimize Impacts to Covered Plant Occurrences; and

10. SCVWD will pay all applicable development fees to the Santa Clara Valley Habitat Agency prior to initiation of construction of the proposed project. The total estimated land cover fees are $6,048.24. This amount is based on permanent impact fees of $1,915.90 (Fee Zone A) and temporary impact fees of $4,132.34 (Fee Zone B).

If the provisions listed above are met, take of the California red-legged frog, Central California tiger salamander, San Joaquin kit fox, and least Bell's vireo resulting from the proposed project will be authorized through the SCVHP's incidental take permit (Fish and Wildlife Permit No.: TE-94345A-0). The effects to listed species that would result from the issuance of this incidental take permit were analyzed in the Service's April 2013 *Intra-Service Biological Opinion on Issuance of a Section 10(a)(1)(B) Incidental Take Permit for the Santa Clara Valley Habitat Conservation Plan/Natural Community Conservation Plan.*

The SCVHP requires specific avoidance and minimization measures for covered activities that have the potential to affect SCVHP covered species, sensitive habitats, natural communities, and jurisdictional wetlands and other waters in Santa Clara County. Therefore, SCVWD will implement all protection measures for the affected species as set forth in the SCVHP.

In addition to avoidance and minimization measures, the SCVHP utilizes a variety of development-based fees to fund mitigation that will offset losses of land cover types, covered species habitat, and other biological values. SCVWD will pay all applicable development fees to the Santa Clara Valley Habitat Agency identified in the Development Fee Table (Table 9-6) and described in Chapter 9.4.1 of the SCVHP (updated fee schedules are available at http://scv-habitatagency.org/DocumentCenter/View/504).

The proposed project, if implemented as described in this letter, complies with all applicable conditions required by the SCVHP. This concludes formal consultation on the SCVWD's 2016 Pacheco Conduit Maintenance Project. As provided in 50 CFR §402.16, reinitiation of formal consultation is required and shall be requested by the Federal agency or by the Service where discretionary Federal agency involvement or control over the action has been retained or is authorized by law and:

(a) If the amount or extent of taking specified in the incidental take statement is exceeded;

(b) If new information reveals effects of the action that may affect listed species or critical habitat in a manner or to an extent not previously considered;

(c) If the identified action is subsequently modified in a manner that causes an effect to the listed species or critical habitat that was not considered in the biological opinion; or

(d) If a new species is listed or critical habitat designated that may be affected by the identified action.

If you have questions concerning this determination on the SCVWD's proposed 2016 Pacheco Conduit Maintenance Project in Santa Clara County, California, please contact Joseph Terry, Senior Biologist, or Ryan Olah, Coast/Bay Division Chief, at the letterhead address, at telephone number (916) 943-6721, or email joseph_terry@fws.gov or ryan_olah@fws.gov.

cc:
Edmund Sullivan, Santa Clara Valley Habitat Agency, Morgan Hill, California

PACHECO CONDUIT INSPECTION AND REHABILITATION PROJECT ADDENDUM NO.2

ATTACHMENT E

SPECIFICATIONS APPENDIX J - BIOLOGICAL MEMORANDUM – PACHECO PIPELINE REHABILITATION PROJECT

Project No. 91214001 & 95084002
Contract No. C0629

This page intentionally left blank.

Santa Clara Valley Water District

MEMORANDUM

FC 14 (01-02-07)

TO: Debra Caldon, Water Resources Planning Unit Manager

FROM: Jae Abel, Biologist III

SUBJECT: Pacheco Pipeline Rehabilitation Project

DATE: November 5, 2017

This memo summarizes the field assessment and analysis of the Pacheco Pipeline Rehabilitation Project. This evaluation is intended to support the Santa Clara Valley Habitat Plan (VHP) reporting requirements for species specific surveys.

Wildlife habitat reconnaissance surveys were conducted over four days beginning on October 18, 2016 and concluding on October 27, 2016 along the Pacheco Conduit and Santa Clara Conduit. These field visits were structured to inspect proposed work areas at vaults, access roadways, staging and service yards for the upcoming pipeline dewatering and routine maintenance along this pipeline.

An initial check included using the Valley Habitat Plan Geobrowser tool for the land cover types and the wildlife habitat survey maps, followed up with detailed GIS mapping prior to the field visit(s). The habitat reconnaissance surveys also included evaluating whether there was evidence of either presence of, or suitable habitat for several wildlife species identified in either the Biological Opinion covering the San Felipe Operations and Maintenance and/or identified as wildlife survey areas in the VHP. These included San Joaquin Kit Fox, San Francisco Dusky-Footed Woodrat, Least Bell's Vireo, Tricolored Blackbird, Western Pond Turtle, California Red-legged Frog, California Tiger Salamander, and Steelhead Trout. These were not protocol-level surveys but rather an inspection for relevant site conditions and habitat to assess the potential for encounter during project activity.

Site Conditions: Creek conditions at the project site at the time of the field visits included reaches that were naturally dry on the South Fork Pacheco Creek and the Middle Fork Pacheco Creek even after recent, relatively heavy rains, as well as a significant reach of the mainstem of Pacheco Creek that was being wetted by reservoir operations from the Pacheco Reservoir on the North Fork Pacheco Creek. This operation feeds water by the North Fork Pacheco Creek to the confluence point with South Fork Pacheco Creek where Pacheco Creek mainstem initiates. There are five creek fords along the ranch road network that provide access to the area (including the pipeline vaults).

Generally, the habitat model from the VHP was accurate to the habitat conditions but at a level of resolution that was much "coarser" than the expected activity and potential disturbance as I estimated during my field visits. Access along the ranch roads would be expected to minimize disturbance since these surfaces are developed, regularly maintained and bladed/graded as well as having been graveled and compacted in original construction. As evidenced by the relatively fresh side berming along portions, this level of maintenance is ongoing by the current land owner(s).

I found that at most of the vault areas, the prevalent ground surface cover to be California Annual Grassland embedded in an adjacent or surrounding habitat and land cover type that may align with the a priori modeled results.

Two vaults, PAC #15 and PAC #16 (including the blow-off riser at PAC #16) were found to be encroached by woody chaparral vegetation. The pipeline reach from vaults PAC #14 to PAC #17 are in a minor narrowing of the canyon where the original vegetation of woodland overstory appears to have been removed during the original pipeline construction/trenching and is now colonized by this woody shrub vegetation. The two vaults affected by this encroachment will require some clearing similar to

what has occurred in past maintenance efforts to ensure safe access and equipment staging for lift operations in and out of the vault.

Two vaults, PAC #22 and SCC #04, including their blow-off risers were in forms of wetland associated with natural seepage and developed water management. A short section of the ranch road network passes by a backwater position of Pacheco Creek that sustains shallow standing water on the road, connected interstitially with the backwater pool. The ranch road crosses stream channel at unimproved fords, one of which was wetted at the time of my visit.

Special Status Species: None of the target animal species were identified during my site visit either by direct observation or by sign (e.g. dens, nesting material, tracks, remains) or sound, but habitat encountered may provide some potential for occurrence for all target sensitive species during the project. The riparian edge along most the creek drainages showed significant evidence of cattle grazing per "high-lining" of the trees by either direct grazing or brushing and near void of streamside understory vegetation such as young willows, sycamore saplings, vining shrubs, etc. This reduces the potential value for the Least Bell's Vireo and the Tricolored Blackbird. Nevertheless, during the winter and into the spring, wildlife may be moving through the areas per wet season conditions. Despite the current reservoir operations at Pacheco Reservoir to sustain a dry season wetted extent, recent years of intense drought have also reduced the stream connectivity of Pacheco Creek with the Pajaro River, limiting the potential for winter and spring access by steelhead. Those drought effects may be limiting for other sensitive species as well. Care must be taken to avoid creating attractive conditions in the project activity centers or unduly disturbing the landscape. Site checks during the project, conducted by Qualified Biomonitors are still recommended to ensure the project activities can avoid direct impacts to sensitive wildlife.

Perpetual seepage coming from the slope side-cut of the easterly adit at the Santa Clara Tunnel may provide an attraction to amphibians. Ponds at the base of the slope were observed with sensitive amphibians in 2002. This is within easy dispersal distance. Thus, these areas may merit closer attention by the biomonitoring effort during project activity in these areas. Site modification is not included nor prescribed at these potentially more vulnerable points, but again, careful biomonitoring at the time of activity may produce the assurance that the activity is not disturbing wildlife, thus minimizing potential for affecting sensitive species. This practice was employed during the pipe rupture and repair activity, successfully implemented in 2015.

I believe the proposed shutdown and refurbishment of the Pacheco Conduit/Santa Clara Tunnel may be successfully managed with the suite of Best Management Practices and Avoidance and Minimization Measures (AMMs) collectively identified for the proposed project from the *Pipeline Maintenance Program EIR* (PMP PEIR), the Biological Opinion for the San Felipe System Operations and Maintenance, the Section 7 Section 7, Not Likely to Adversely Affect Determination for the PMP PEIR and the Valley Habitat Plan HCP/NCCP (Attachment A).

Jae Abel

Jae Abel

Attachments:
Attachment A – Wildlife Survey Maps
Attachment B – Conditions, Best Management Practices, and Mitigation Measures Incorporated Into the Proposed Project

Attachment A
Wildlife Survey Maps

Area where vegetation removal is proposed at PC #15 and PC #16

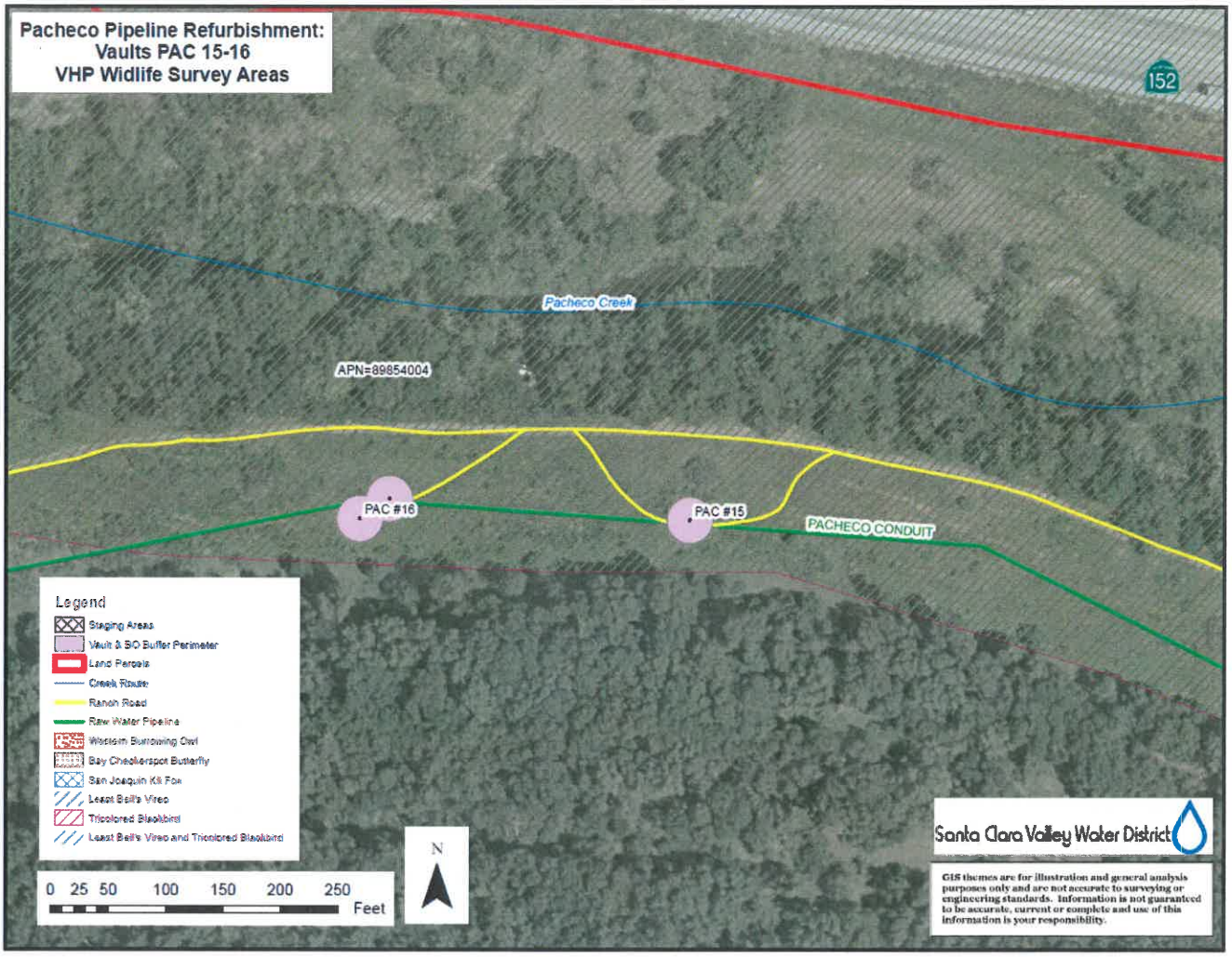

Staging Areas

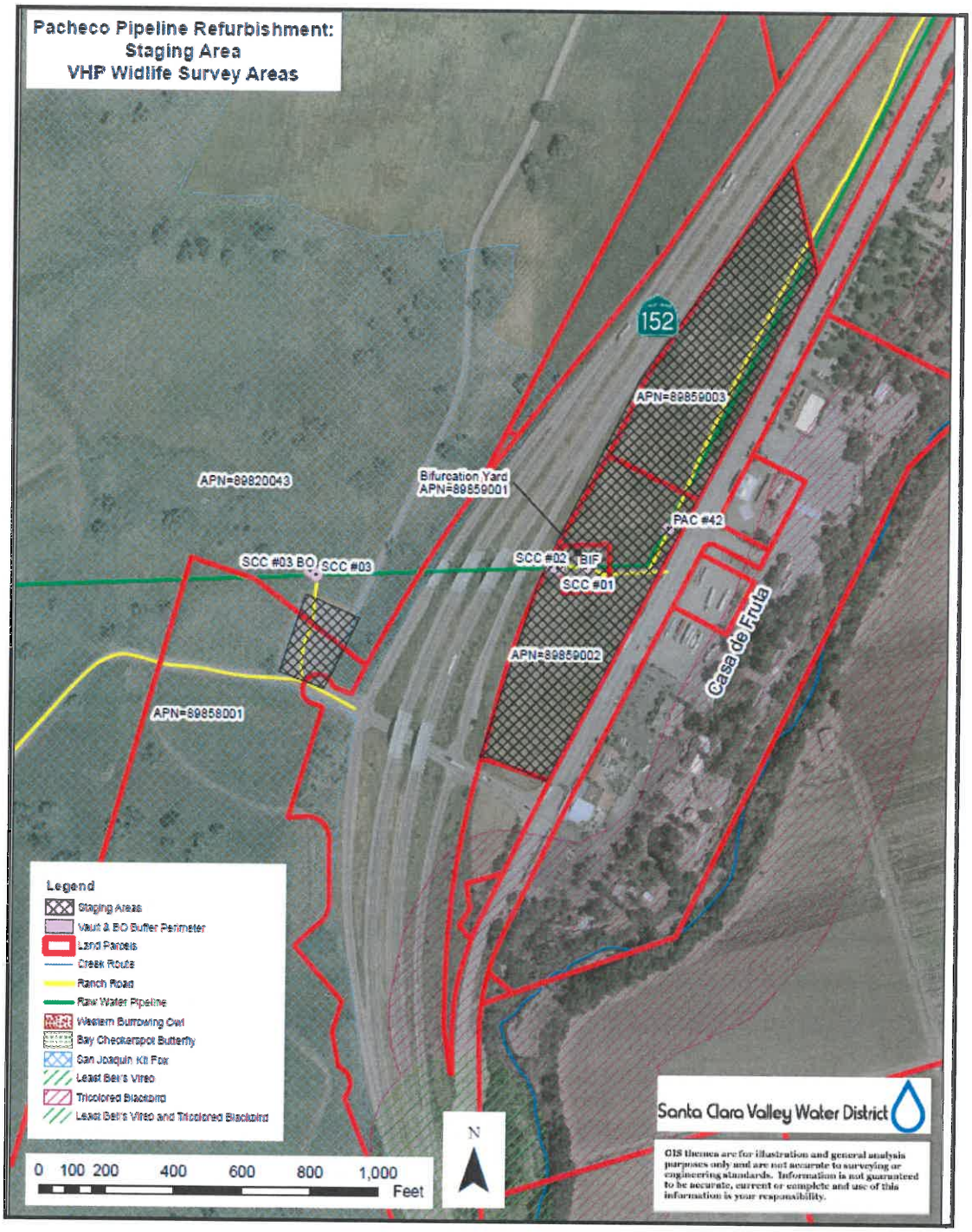

Attachment B – Conditions, Best Management Practices, and Mitigation Measures Applied to the Project

Pacheco Pipeline Rehabilitation Project

The following table describes applicable conditions from the *Santa Clara Valley Habitat Plan* (VHP), Best Management Practices (BMPs) and Mitigation Measures from the *Pipeline Maintenance Program EIR* and the Section 7 Consultation Determination Letter of Not Likely to Adversely Affect from the National Marine Fisheries Service (NMFS) that would be applied to the project.

BMP, Condition, AMM, and/or Minimization Measure Reference	Description
Santa Clara Valley Habitat Plan Conditions	
VHP Condition 1: Avoid Direct Impacts on Legally Protected Plant and Wildlife	The project would comply with Condition 1 of the VHP in order to avoid the take of fully protected species that are known to occur within the study area including Golden eagle, bald eagle, American peregrine falcon, Southern bald eagle, White-tailed kite, California condor, and Ring-tailed cat either by implementing repairs during the non-breeding season (September 1 to January 31) or by conducting pre-construction surveys and maintaining appropriate buffers around nests that contain eggs or young as noted on pages 6-7 and 6-8 of the VHP.
VHP Condition 3: Maintain Hydrologic Conditions and Protect Water Quality (Table 6-2 of the VHP).	The project would comply with Condition 3, which necessitates implementing the measures listed in Chapter 6 (Table 6-2) of the VHP. These measures are BMPs to protect water quality and avoid other adverse effects, such as source and treatment control measures to prevent pollutants from leaving the construction site and minimizing site erosion and local sedimentation during construction. Many of these measures overlap or are similar to the District's BMPs.
VHP Condition 5: Avoidance and Minimization Measures for In Stream Operations and Maintenance	The project would comply with Condition 5 of the VHP, which requires the identification of avoidance and minimization measures for conducting in-stream operations and maintenance activities. The project would be required to implement the avoidance and minimization measures listed on page 6-20 of the VHP.
VHP Condition 12: Wetland and Pond Avoidance and Minimization	The project would comply with Condition 12 of the VHP helps to minimize impacts on high quality wetlands and ponds by prescribing vegetated stormwater filtration features, proper disposal of cleaning materials, and other requirements. The project would be required to implement the avoidance and minimization measures listed on pages 6-56 to 6-58 of the VHP.
Condition 14: Valley Oak and Blue Oak Avoidance and Minimization	The project would comply with Condition 14 of the VHP, which requires conditions to avoid or minimize impacts on valley and blue oak woodland in the project area as described on pages 6-60 and 6-61 of the VHP.

VHP Condition 16: Least Bell's Vireo	The project would comply with Condition 16 in the VHP in order to avoid and minimize direct impacts of covered activities within any breeding habitat of least Bell's vireos. This condition in the VHP is required as activities would be located within 250 feet of a riparian cover type. . If a project meets this criterion, a qualified biologist is required to conduct a pre-construction field investigation as described on pages 6-68 and 6-69 of the VHP in order to be in compliance with the VHP and the Migratory Bird Treaty Act.
VHP Condition 17: Tricolored Blackbird	The project would comply with Condition 17 of the VHP in order to avoid direct impacts of covered activities on nesting tricolored blackbird colonies. This condition in the VHP is required as it is located within 250 feet of a riparian cover type. For portions of the project site that meet this criterion, a qualified biologist is required to conduct a field investigation to identify and map potential nesting substrate as described on pages 6-70 and 6-71 of the VHP. Nesting substrate includes flooded, thorny or spiny vegetation.
VHP Condition 18: San Joaquin Kit Fox.	The project would comply with Condition 18 of the VHP, which requires that the disturbance of all San Joaquin kit fox dens will be avoided to the maximum extent possible. To avoid or minimize direct impacts of covered activities on San Joaquin kit fox, a preconstruction survey is required to be conducted by a qualified biologist in areas that are suitable breeding or denning habitat. Avoidance and minimization measures noted on pages 6-72 and 6-73 would be required if the project does not fully avoid dens or kit fox individuals.
VHP Condition 20: Avoid and Minimize Impacts to Covered Plant Occurrences	The project would comply with Condition 20 of the VHP, which requires that surveys for covered plants are conducted in certain areas in order to: 1) identify occurrences of covered plants, and 2) assess the condition of the occurrences. Avoidance and minimization measures will be applied if a qualified biologist determines that the long-term viability of a covered plant occurrence will be reduced by implementation of covered activities.
Best Management Practices	
Aesthetics	
BMP Aesthetics-1	Avoid establishing staging areas within 500 feet of any scenic resources such as designated vista points along urban or rural trails, visible rock outcroppings, or designated historic buildings.
Air Quality	
PMP PEIR BMP Air Quality-1	The access road and interior circulation routes associated with any project requiring continuous daily access for greater than 1 week shall be treated with a dust suppressant and maintained in such a manner as to insure minimum dust generation subject to the Air Quality Management District's dust regulations.
PMP PEIR BMP Air Quality-3	No burning will be allowed on any project. Idling of internal combustion engines shall be held to an absolute minimum. All vehicles with internal combustion engines shall be fitted with spark arresters.
PMP PEIR BMP Air Quality-6	Implement Bay Area Air Quality Management District (BAAQMD) Basic Control Measures for construction emissions of PM_{10} at all construction sites. Current measures stipulated by the BAAQMD CEQA Guidelines include the following (BAAQMD 1999):

	1. Active areas shall be watered at least twice per day unless soils are already sufficiently moist to avoid dust. The amount of water must be controlled so that runoff from the site does not occur, yet dust control is achieved. 2. Trucks hauling soil, sand, and other loose materials shall be covered or shall maintain at least two feet of freeboard. 3. Unpaved access roads, parking areas and staging areas at construction sites shall be paved, watered three times daily, or non-toxic soil stabilizers shall be applied to control dust generation. 4. Paved site access roads, parking areas, and staging areas shall be swept daily (with vacuum-powered street sweepers). 5. Paved public streets shall be swept (with vacuum-powered street sweepers) if visible soil material is carried onto adjacent paved surfaces.
Biology	
PMP PEIR BMP Biology-1	Woody material (including live leaning trees, dead trees, tree trunks, large limbs, and stumps) will be retained unless it is threatening a structure or impedes reasonable access, in which case it will be retained on site but moved to a less threatening position.
PMP PEIR BMP Biology-2	All trash will be removed from the site daily to avoid attracting potential predators to the site.
PMP PEIR BMP Biology-3	Building materials and construction materials will not be stockpiled or stored where they could be washed into the water or where they will cover aquatic or riparian vegetation.
Hazards	
PMP PEIR BMP Hazards-1	Smoking shall be prohibited except in designated staging areas and at least 20 feet from any combustible chemicals, dry grass, or vegetation. Smoking shall be prohibited in pipeline or near the repair surface.
PMP PEIR BMP Hazards-2	All heavy equipment and rubber-tired construction vehicles used for off-road access in rural environments shall be equipped with fire extinguishers. All rubber-tired construction vehicles used for off-road access in rural environments shall be equipped with appropriate firefighting equipment, such as shovels and axes or pulaskis, to aid in the prevention or spread of fires. All construction equipment shall be equipped with the appropriate spark arrestors and functioning mufflers.
PMP PEIR BMP Hazards-3	An extinguisher shall be available at the project site at all times when welding or other repair activities that can generate sparks (such as metal grinding) is occurring.
PMP PEIR BMP Hazards-4 and NMFS BMP Hazards-4	Measures shall be implemented to ensure that hazardous materials are properly handled and the quality of water resources is protected by all reasonable means. 1) Prior to entering the work site, all field personnel shall know how to respond when toxic materials are discovered. 2) The discharge of any hazardous or non-hazardous waste as defined in Division 2, Subdivision 1, Chapter 2 of the California Code of Regulations shall be conducted in accordance with applicable State and federal regulations
PMP PEIR BMP Hazards-5 and NMFS BMP Hazards-5	Spill prevention kits shall always be in close proximity when using hazardous materials (e.g., crew trucks and other logical locations). 1) Prior to entering the work site, all field personnel shall know the location

	of spill kits on crew trucks and at other locations within District facilities. 2) All field personnel shall be advised of these locations and trained in their appropriate use.
PMP PEIR BMP Hazards-6 and NMFS BMP Hazards-6	All equipment will be properly maintained and inspected for leaks daily before start of work. No fueling shall be done in a stream channel or immediate flood plain, unless equipment stationed in these locations is not readily relocated (i.e., pumps, generators). 1) For stationary equipment that must be fueled on-site, containment shall be provided in such a manner that any accidental spill of fuel shall not be able to enter the water or contaminate sediments that may come in contact with water. 2) All fueling done at the job site shall provide containment to the degree that any spill shall be unable to enter any channel or damage stream vegetation.
PMP PEIR BMP Hazards-7 and NMFS BMP Hazards-7	The District shall prevent the accidental release of chemicals, fuels, lubricants, and non-storm drainage water into channels. District vehicles shall be washed only at the approved area in the corporation yard. 1. Field personnel shall be appropriately trained in spill prevention, hazardous material control, and clean-up of accidental spills. 2. No fueling, repair, cleaning, maintenance, or vehicle washing shall be performed in a creek channel or in areas at the top of a channel bank that may flow into a creek channel
PMP PEIR BMP Hazards-8 and NMFS BMP Hazards-8	No washing of vehicles shall occur at job sites.
PMP PEIR BMP Hazards-9 and NMFS BMP Hazards-9	Debris, soil, silt, bark, rubbish, creosote-treated wood, raw cement/concrete or washings thereof, asphalt, paint or other coating material, oil or other petroleum products, or any other substances which could be hazardous to aquatic life, shall be prevented from contaminating the soil and/or entering the waters of the state. Any of these materials, placed within or where they may enter a stream or lake shall be removed immediately.
PMP PEIR BMP Hazards-10 and NMFS BMP Hazards-10	All equipment shall be stored in a secure area away from the channel. Quantities greater than 55 gallons will be provided with a secondary containment capable of containing 110 percent of the primary container. During the period between October 15 and April 15 (and depending on rain patterns, could include before and after these dates as well), all equipment fluid storage areas will be provided with an impermeable cover to prevent contact with storm water.
PMP PEIR BMP Hazards-14	The Contractor/Field crew shall provide one portable toilet and one wash station per 20 workers or fraction thereof for any project sites that do not have mobile access to a nearby facility. Wash stations shall also be required on-site for any job where hazardous materials are handled (such as in repair work) or where pipeline draining involves using dechlorination chemical.
PMP PEIR BMP Hazards-15	Projects will be designed to avoid driving through wetland habitats and temporary mats would be used when driving through wetlands is unavoidable.

PMP PEIR BMP Hazards-16	All chemicals stored in staging areas will be stored in secondary containment with no less than 110% capacity. Proper storage and security will be implemented to ensure that chemicals are not spilled or vandalized during non-working hours.
Hydrology and Water Quality	
PMP PEIR BMP Hydrology-1 and NMFS BMP Hydrology-1	Access shall be provided as close to the work area as possible, using existing ramps where available and planning work site access so as to minimize disturbance to the creek bed, creek banks, and the surrounding land uses.
PMP PEIR BMP Hydrology-2	Methods used to prevent mud from being tracked out of work sites onto roadways include installing on unsurfaced access roads a layer of geotextile mat followed by a 4-inch thick layer of 1-3 inch diameter gravel.
PMP PEIR BMP Hydrology-3 and NMFS BMP Hydrology-3	Erosion control matting or fabric shall be installed if necessary.
PMP PEIR BMP Hydrology-4 and NMFS BMP Hydrology-4	Temporary fills, such as for temporary roads, access ramps, diversion structures, or cofferdams, shall be removed upon finishing the work.
PMP PEIR BMP Hydrology-5 and NMFS BMP Hydrology-5	Discharge volume reduction options (such as performing maintenance activities with partially full pipelines, employing sectioning valves, and/or opportunities for reuse of water) will be considered prior to draining the pipelines.
PMP PEIR BMP Hydrology-6 and NMFS BMP Hydrology-6	Discharge rates will be ramped up slowly such that the increase in flow rate in the receiving water is gradual and scouring of the channel bed and banks does not occur.
PMP PEIR BMP Hydrology-7 and NMFS BMP Hydrology-7	Flows will be diverted around sensitive, actively eroding, or extremely steep areas to prevent erosion. Flow diversion methods might include use of flexible piping and/or placement of sandbags to alter flow direction, or equivalent measures. The new flow path and discharge point will be monitored for signs of erosion.
PMP PEIR BMP Hydrology-8 and NMFS BMP Hydrology-8	To protect exposed soil and vegetated surfaces from erosion, erosion control blankets, mats, or geotextiles will be placed over the erodible surface. A number of materials are available ranging from straw blankets to synthetic fiber with netting. The blanket can be removed following completion of the discharge or left in place to provide a more permanent means of erosion control. If netted material is used, it would be removed immediately after use to prevent entanglement of and impacts to wildlife species. Instructions for installation can be found in the Construction Volume of the California Stormwater BMP Handbook (CASQA, 2003).
PMP PEIR BMP Hydrology-9 and NMFS BMP Hydrology-9	Velocity dissipation devices can be installed at frequently used discharge sites to reduce flow velocities and capture sediment. These devices typically combine plantings of willows with placement of angular stone riprap on top of filter fabric to create an apron at the discharge point. Where this BMP is recommended for permanent stabilization of existing erosion, minor grading may be necessary. Design and layout recommendations that appear in the Construction Volume of the California Stormwater BMP Handbook (CASQA, 2003) will be followed to the extent possible. Preference will be given to use of bioengineered devices whenever

	possible. Gabion shall not be used in salmonid streams.
PMP PEIR BMP Hydrology-10 and NMFS BMP Hydrology-10	Temporary flow path check filters can be placed at single or multiple locations along the flow path to remove sediment from discharges and slow the rate of flow. Check filters are constructed of rock, sandbags, fiber rolls, or equivalent materials, and will be installed following recommendations in the WUDPPP and Stormwater BMP Handbook (CASQA, 2003). Each check filter will be modified with a notch or low spot to direct the flow path and prevent discharges from flowing around the sides of the check filter. Sediment that becomes trapped behind the check filters will be carefully removed to avoid disturbing the channel or swale and disposed of appropriately. Flow path check filters are typically applied where discharges to upland areas are planned. In channel settings, the temporary installation of flow path check filters will likely require a Streambed Alteration Permit from the California Department of Fish and Game (CDFG) per Fish and Game code section 1602 and a Section 401 of the Clean Water Act certification. These permits will require that certain provisions are followed, such as restricting use to only dry flow conditions.
PMP PEIR BMP Hydrology-12 and NMFS BMP Hydrology-12	Existing access ramps and roads to streams shall be used where possible. If temporary access points are necessary, they shall be constructed in a manner that minimizes impacts to streams.
PMP PEIR BMP Hydrology-13 and NMFS BMP Hydrology-13	Where practicable, maintain a vegetated buffer strip between staging/excavation areas and receiving waters.
PMP PEIR BMP Hydrology-14 and NMFS BMP Hydrology-14	Erosion control measures shall be utilized throughout all phases of the operation where sediment runoff from exposed slopes threatens to enter waters of the State. At no time shall silt laden runoff be allowed to enter water of the State.
NMFS BMP	In cases where sections of stream would receive discharge are dry, receiving waters will be monitored to quantify distance of re-watering. In order to avoid steelhead stranding, discharge rates will be implemented to avoid hydrologic connectivity; monitoring will be conducted to ensure there is no connectivity.
Noise	
PMP PEIR BMP Noise-1	Workers or contractors shall carry noise abatement devices or equipment to construct a noise abatement device for work that must be performed outside of normally allowed operating hours (which is defined as either between 7 a.m. and 7 p.m. or as dictated by local code). Equipment to construct a noise abatement device could include large pieces of plywood, insulating material, egg carton material, etc.
PMP PEIR BMP Noise-2	Workers or contractors shall keep noise from construction activities as low as possible. In no case shall noise levels produced by the Contractor exceed any of the following maximums: a) No individual piece of equipment shall produce a noise level exceeding 83 dbA at a distance of 25 feet. [Source: BMP Water Supply Division No. 15.02] b) The noise level at any point outside of the property line or temporary construction area shall not exceed 86 dbA during work hours or 60 dbA during nonworking hours. No equipment violating these standards will be allowed to operate. [Source: BMP Water Supply Division No. 15.02]

	c) Workers and contractors shall contact the local jurisdiction to determine what, if any, additional noise or equipment limitations apply and shall conform to those regulations as well as shown in Table 8.1-1.
PMP PEIR BMP Noise-3	Contractor will implement practices that minimize disturbances to residential neighborhoods surrounding work sites. a) Internal combustion engines will be equipped with adequate mufflers. b) Excessive idling of vehicles will be prohibited. c) All construction equipment will be equipped with manufacturer's standard noise control devices. d) The arrival and departure of trucks hauling material will be limited to the hours of construction. The use of jake brakes is prohibited in residential areas.
Transportation and Traffic	
PMP PEIR BMP Traffic-1	Public safety measures shall be implemented as follows: 1) Construction signs shall be posted at job sites warning the public of construction work and to exercise caution. 2) When necessary, a person shall be provided for traffic control. 3) If needed, a lane shall be blocked off to allow for trucks to pull into and out of the access points. 4) Where work is proposed adjacent to a recreational trail, warning signs shall be posted several feet beyond the limits of work. 5) Fencing, either the orange safety type or chain-link, shall be installed around project areas to keep the public out as necessary.
PMP PEIR BMP Traffic-2	Vehicles shall access the maintenance site by using local streets, highways, and the maintenance road, except when otherwise noted. Levee and unpaved roadway traffic speed will be limited to 10 miles per hour.
PMP PEIR BMP Traffic-3	Pipes, hoses, and other equipment shall be routed around trails or other areas to prevent hazards to the greatest extent feasible. When rerouting is not possible, pipes and hoses shall be covered to avoid traffic or pedestrian hazards.
Utilities and Service Systems	
BMP Utilities-1	Field personnel shall clean the work site before leaving by removing all litter and construction related materials. Maintenance crews shall be responsible for all debris incurred as a result of construction and for cleaning up dumped material.

BMP Utilities-2	All construction and maintenance wastes will be taken off-site to disposal collection areas for proper permanent disposal according to regulations.
Mitigation Measures	
Biology	
PMP EIR Mitigation Measure Biology-1	If the biologist notes potential wetland areas, placement of fill within the potential wetland areas will be avoided if possible (such as by moving the road, etc.). If avoidance is not possible an ACOE jurisdictional wetland delineation will be performed according to the 1987 wetland delineation manual and the appropriate Section 404 and 401 processes followed. Placing fill within a jurisdictional wetland will require implementation of mitigation as included in the ACOE and RWQCB permits and may include local wetland enhancement, replacement, or creation of wetlands at a location approved by the appropriate regulatory agencies, such as Calero Creek.
PMP PEIR Mitigation Measure Biology-3	In defining laydown areas and access, the District shall use its GIS database to identify serpentine areas near work areas and avoid and minimize impacts to all stands of native vegetation that may provide suitable habitat for special status plants and invertebrates to the greatest extent possible. No staging shall occur on open soils known to be serpentine and operation of maintenance equipment should be limited to established roads whenever possible.
PMP PEIR Mitigation Measure Biology-7	All off-road access routes to vaults or other service areas will be surveyed and delineated by a biologist prior to use. The access roads will be flagged such that sensitive plant species, vernal pools (potentially occurring in rural areas), and animal burrows are avoided. Routes will be limited to not more than 15 feet wide. Personnel will be required to adhere to marked paths. No other off-road travel will be allowed. If any burrows potentially occupied by sensitive species, sensitive plants, or vernal pools can not be avoided, the District will consult with CDFG to determine the most appropriate course of action.
PMP PEIR Mitigation Measure Biology-8 and NMFS Minimization Measure Biology-8	For any staging and access and/or excavation in any critical habitat area, a biological monitor will be present to oversee work. The monitor will have the authority to stop operations if any threat to critical habitat is presented. This measure will be implemented to avoid or minimize any potential erosion or sedimentation from staging and access and would avoid critical habitat from those subtasks.

PMP PEIR Mitigation Measure Biology-10	A qualified biologist will conduct pre-staging and pre-excavation surveys for the dusky-footed wood rat when work occurs within 100 feet of dense shrub cover and riparian settings. If pre-staging or pre-excavation surveys determine that woodrat occupies the site just prior to staging, then avoidance measures will be the first choice of action, including maintenance of the 100 foot buffer between the staging/excavation area and the woodrat nests (e.g., do not remove woody vegetation or nesting materials occupied by the species). If avoidance is not feasible, the District and/or qualified biologist shall coordinate with the CDFG for the best course of action to minimize impacts to the woodrat. Woodrat nests can be moved out of the excavation footprint by a qualified biologist under the guidance of the CDFG; however, the qualified biologist will only remove woodrat nests within the action area and only when absolutely necessary. Any additional standard protection measures and recommendations for the San Francisco dusky-footed woodrat that are adopted by the District and CDFG in the future will be applied as applicable.
PMP PEIR Mitigation Measure Biology-16 & NMFS Minimization Measure Biology-16	Pipeline discharge for maintenance work would preferentially be performed during winter months, when storm events are more common and when water is naturally highest. Discharge flows are then a minimal portion of overall stream or river flow. If draining must occur during summer or fall, a slow release is mandatory to ensure receiving waters do not experience a temperature change greater than 2 degrees (Jennings, personal communication 2006). Fahrenheit in either direction, and overall receiving water does not exceed 68 degrees Fahrenheit in steelhead and Chinook salmon inhabited streams.
PMP PEIR Mitigation Measure Biology-17 & NMFS Minimization Measure Biology-17	Temporary fish screens shall be applied to any primary or secondary or side channel that could receive pipeline flows, causing attractant flows that will subside once draining is complete. Screen designs will be approved of by a qualified biologist, to ensure that appropriate material is used so as to not injure fish. Screen design and construction will depend upon the channel and available technology/techniques, but could consist of nylon mesh in a wooden frame, a triangular frame with soft nylon or wire mesh placed in the water, etc. Screens will be periodically monitored for debris and removed after project completion and stabilization of water levels.
PMP PEIR Mitigation Measure Biology-18 and NMFS BMP Biology-18	In areas where temporary velocity dissipation devices are proposed for installation, the area will first be surveyed by a qualified biologist to ensure that no steelhead or Chinook salmon fry or eggs; no California red-legged frog eggs or larvae; and no California tiger salamander eggs or larvae are present within 500 feet upstream and downstream of the proposed structure (within the stream channel). If fry or eggs are found and could be impacted by placement of flow dissipation BMPs, then the discharge point would either not be used, be redirected upstream in a cleared area (such as with a hose), or discharge will not occur until the eggs and/or fry have moved from the area.
PMP PEIR Mitigation Measure-19	If a pipeline water discharge is scheduled to occur from January through August along any of the pipelines listed in the Summary Table of Federal and State Threatened and Endangered Species with Potential for Occurrence by Pipeline (Table 5.3-1 in PEIR/EA and Table 4.6-3 in the PMP) where there is potential

	California tiger salamander, California red-legged frog, and/or foothill yellow legged frog habitat, a survey for the species with potential to occur will be performed by a qualified biologist within 1 week prior to release. If California tiger salamander, California red-legged frog, or foothill yellow-legged frog eggs or larvae are not found within 500 feet upstream or downstream of the release point, absence will be re-verified within 24 hours of installation of BMP's and commencement of release. Release can commence if no eggs or larvae are found 500 feet upstream or downstream during the second survey. BMPs that control velocity (velocity dissipation) and flow rate will be implemented in any area with potential Special-Status amphibian habitat (indicated the Summary Table of Federal and State Threatened and Endangered Species with Potential for Occurrence by Pipeline (Table 5.3-1 in PEIR/EA and Table 4.6-3 in the PMP)). If eggs or larvae are found within 100 feet downstream of a release point, the discharge point will not be utilized, if possible. Velocity reduction can be accomplished either by slowing release, decreasing release volume at the point, and/or applying dissipation in the immediate area of the discharge point as long as dissipation devices would not affect any adult Special-Status amphibians, their eggs, or larvae. A qualified biologist will oversee implementation of Mitigation Measure Biology-19.
PMP PEIR Mitigation Measure Biology-20 and NMFS Minimization Measure Biology-20	During pipeline draining, mesh screens, adhering to Fish Screen Criteria (Appendix G of the PMP), which list specific mesh sizes, will be placed over the discharge openings of gravity drain gates and on the suction and discharge piping of any submersible pumps used for pipeline discharge to minimize discharge of species, for any discharge of Delta water. It may be necessary to place fish containment screens in side channels. The screens must be examined throughout the draining process to remove introduced fish and to prevent debris clogging.
PMP PEIR Mitigation Measure Biology-24	If excavation were to occur along any pipeline within potential California tiger salamander or California red-legged frog habitat (as listed in the Summary Table of Federal and State Threatened and Endangered Species with Potential for Occurrence by Pipeline (Table 5.3-1 in PEIR/EA and Table 4.6-3 in the PMP) the area will be surveyed, according to current agency protocols by a qualified biologist, for presence of California tiger salamanders and California red-legged frogs prior to excavation, including excavation within stream banks, and excavation for laying or filling road material. Any burrows within the construction footprint of areas that are determined to have suitable habitat and potential for occurrence of California tiger salamanders or California red-legged frogs as determined through habitat reconnaissance surveys shall be examined for individuals following recommendations of the CDFG and/or USFWS or protocol surveys, as appropriate. If any individuals are found, a qualified biologist will remove them to suitable habitat outside of the project limits. Moving animals will be consistent with applicable Fish and Wildlife Service and Fish and Game permits.
Hydrology and Water Quality	
PMP PEIR Mitigation Measure Hydrology-3 and NMFS Minimization Hydrology-3	The discharge location and receiving water will be observed for signs of erosion by a trained individual. If erosion is evident, flow rates will be reduced. If erosion continues to occur, discharges will be terminated until appropriate erosion control BMPs are installed. Monitoring will be conducted just prior to the start of the discharge and regularly (i.e., every hour, every four hours, every eight hours) during the discharge. Monitoring frequency will depend on the nature of the discharge and the erosion in the area.
PMP PEIR	An environmental monitor will walk along each discharge drainage to the

Mitigation Measure Hydrology-4 and NMFS Minimization Measure Hydrology-4	termination of the drainage or 500 feet downstream to inspect for erosion after a draining is complete. If erosion is detected, reclamation measures should be taken to correct the erosion. Correction measures shall include recontouring the land to its previous state and revegetating with the dominant appropriate native grass species in the area, if necessary.

This page intentionally left blank.

PACHECO CONDUIT INSPECTION AND REHABILITATION PROJECT ADDENDUM NO.2

ATTACHMENT F

SPECIFICATIONS APPENDIX K - BOTANICAL SURVEY OF PACHECO CONDUIT, VAULTS 2-42 MEMORANDUM

Project No. 91214001 & 95084002
Contract No. C0629

This page intentionally left blank.

Santa Clara Valley Water District

MEMORANDUM

TO: David Matthews **FROM**: Laura Garrison

SUBJECT: Botanical Survey of Pacheco Conduit, Vaults 2-42 **DATE**: 6/22/2016

I conducted a botanical survey on April 15 (with Janell Hillman), June 13 and 15, 2016 along the Pacheco Conduit. The purpose of the field visits was to preview proposed work areas at vaults 2-42 for the upcoming pipeline inspection and dewatering along this reach. The areas surveyed were the areas immediately surrounding each vault (approximately 15 feet on all sides), and for blow-off vaults, the path blow-off water would follow until contact with Pacheco Creek or another destination (*e.g*. other small streams, culverts, or drainages).

No sensitive plant species were observed in the vicinity of the vaults or along the path of water between blow-off vaults and Pacheco Creek or culverts. Consistent with the disturbance regime, including grazing, the typical plant community observed was a mixture of non-native and native species, dominated by non-native species such as wild radish (*Raphanus sativa*), black mustard (*Brassica nigra*), thistles (*Centaurea* spp., *Sylibum marianum*, *Carduus pycnocephalus*), hop clover (*Trifolium campestre*), and non-native grasses (including Italian wild rye (*Festuca perennis*), foxtail chess (*Bromus madritensis* ssp. *madritensis*), and Mediterranean barley (*Hordeum marinum* ssp. *gussoneanum*)).

Vaults higher in the watershed and higher on slopes above the road were more likely to be surrounded by native vegetation in addition to the suite of non-natives, with dominants including California sagebrush (*Artemisia californica*), California buckwheat (*Eriogonum fasciculatum*), elderberry (*Sambucus nigra*), and beardless wild rye (*Elymus triticoides*). Areas along Pacheco Creek also had a higher proportion of native vegetation, including typical wetland plants such as willows and rushes (including arroyo willow (*Salix lasiolepis),* iris-leaved rush *(Juncus xiphioides)*, and dotted smartweed (*Persicaria punctata*)). The vaults closest to Casa de Fruta (37-42) were particularly depauperate in species and overgrown with tall weeds (or, in the case of vault 38, mowed in conjunction with the harvest of adjacent hay fields). Proposed vegetation removal at these vaults in order to provide access to the vaults for inspection is unlikely to adversely affect any sensitive species or habitats.

No sensitive serpentine habitats are located in the proposed project area. Sycamore alluvial woodland, mixed riparian forest and woodland, and willow riparian forest and scrub habitats are present in the project area, but the proposed project activities are unlikely to adversely affect these habitats.

A complete plant list for the areas around vaults 2-42 is available upon request.

Please contact me if you have any questions or need further information.

Laura Garrison, Botanist
Environmental Mitigation and Monitoring Unit
Watershed Stewardship & Planning Division
(408) 630-3026
lgarrison@valleywater.org

cc: Joe Chavez, Janell Hillman
attached: plant lists for representative vaults

Representative Vault Plant Lists

1. Vault 12 (upper watershed blow-off vault)

Family	Scientific Name	Common Name
Poaceae	*Avena fatua*	wild oat
Asteraceae	*Baccharis pilularis*	coyote brush
Asteraceae	*Baccharis salicifolia*	mule fat
Brassicaceae	*Brassica nigra*	black mustard
Asteraceae	*Carduus pycnocephalus*	Italian thistle
Cyperaceae	*Cyperus eragrostis*	tall flatsedge
Dipsacaceae	*Dipsacus fullonum*	Fuller's teasel
Cyperaceae	*Eleocharis macrostachya*	common spikerush
Onagraceae	*Epilobium brachycarpum*	autumn willowherb
Onagraceae	*Epilobium ciliatum*	fringed willowherb
Geraniaceae	*Erodium cicutarium*	red stemmed filaree
Euphorbiaceae	*Euphorbia peplus*	petty spurge
Poaceae	*Festuca perennis*	Italian rye grass
Apiaceae	*Foeniculum vulgare*	fennel
Asteraceae	*Grindelia camporum*	common gumplant
Asteraceae	*Helminthotheca echioides*	bristly ox-tongue
Cyperaceae	*Isolepis carinata*	keeled bulrush
Asteraceae	*Lactuca serriola*	prickly lettuce
Fabaceae	*Lotus corniculatus*	birdfoot trefoil
Fabaceae	*Lotus tenuis*	narrow-leaf bird's-foot trefoil
Fabaceae	*Medicago polymorpha*	bur clover
Fabaceae	*Melilotus indicus*	sourclover
Polygonaceae	*Persicaria punctata*	dotted smartweed
Plantaginaceae	*Plantago lanceolata*	English or narrow-lvd plantain
Plantaginaceae	*Plantago major*	common plantain
Poaceae	*Hordeum marinum ssp. gussoneanum*	Mediterranean barley
Poaceae	*Polypogon interruptus*	ditch rabbitsfoot grass
Poaceae	*Polypogon monspeliensis*	annual beard grass
Fagaceae	*Quercus agrifolia*	coast live oak
Polygonaceae	*Rumex californicus*	California dock
Polygonaceae	*Rumex crispus*	curly dock
Salicaceae	*Salix laevigata*	red willow
Salicaceae	*Salix lasiolepis*	arroyo willow
Asteraceae	*Sonchus asper*	spiny sowthistle
Caryophyllaceae	*Stellaria media*	chickweed
Fabaceae	*Trifolium glomeratum*	clustered clover

2. Vault 33 (lower watershed vault)

Family	Scientific Name	Common Name
Fabaceae	*Acmispon americanus*	Spanish clover
Asteraceae	*Artemisia californica*	California sagebrush
Poaceae	*Avena fatua*	wild oat
Asteraceae	*Baccharis pilularis*	coyote brush
Brassicaceae	*Brassica nigra*	black mustard
Asteraceae	*Centaurea calcitrapa*	purple star thistle
Geraniaceae	*Erodium botrys*	big heron bill
Asteraceae	*Grindelia camporum*	common gumplant
Poaceae	*Hordeum marinum ssp. gussoneanum*	Mediterranean barley
Lamiaceae	*Marrubium vulgare*	white horehound
Fabaceae	*Trifolium campestre*	hop clover
Fabaceae	*Trifolium glomeratum*	clustered clover

PACHECO CONDUIT INSPECTION AND REHABILITATION PROJECT ADDENDUM NO.2

ATTACHMENT G

REVISED DRAWING SHEETS E-118-E-120

Project No. 91214001 & 95084002
Contract No. C0629

This page intentionally left blank.

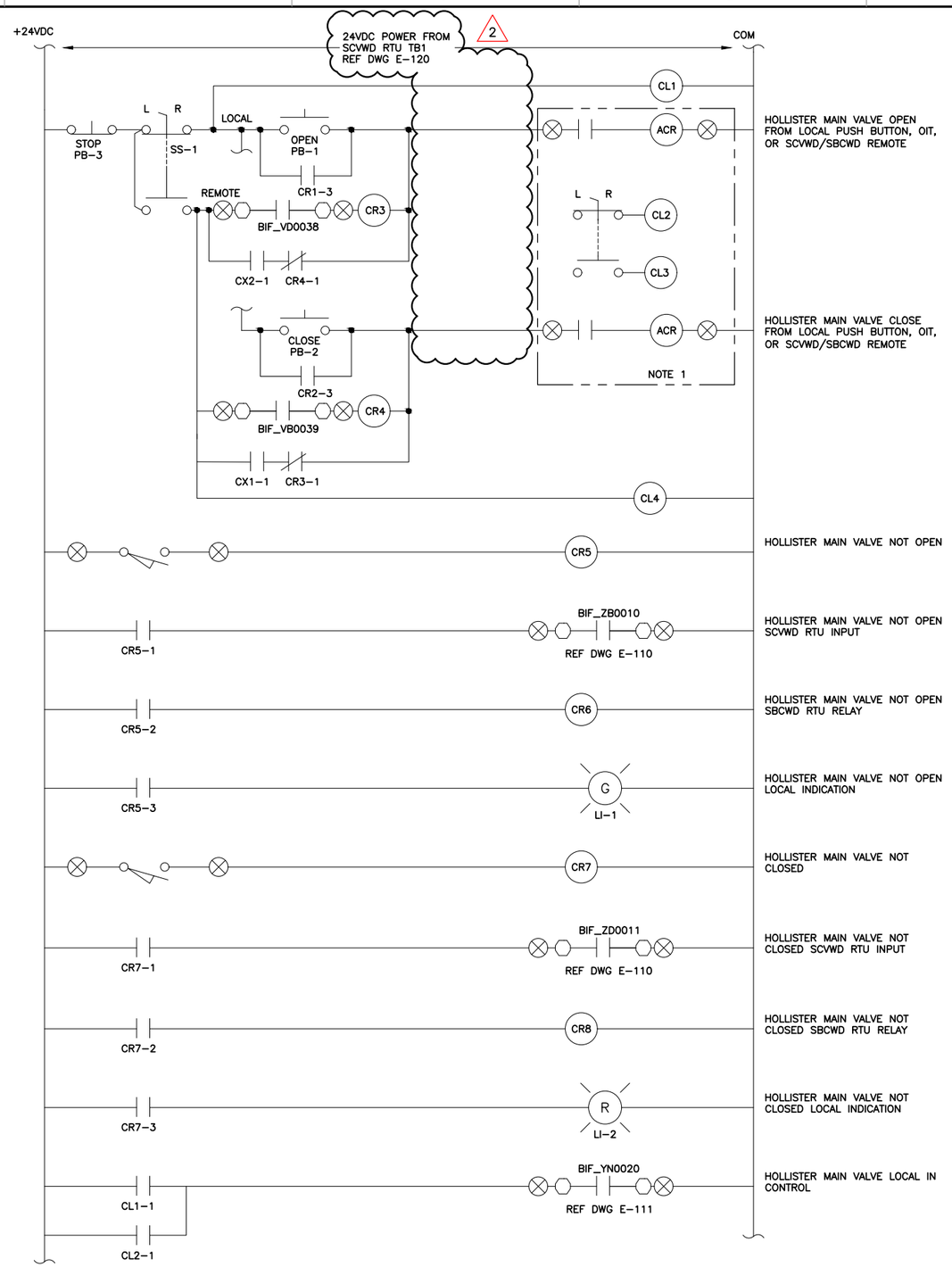

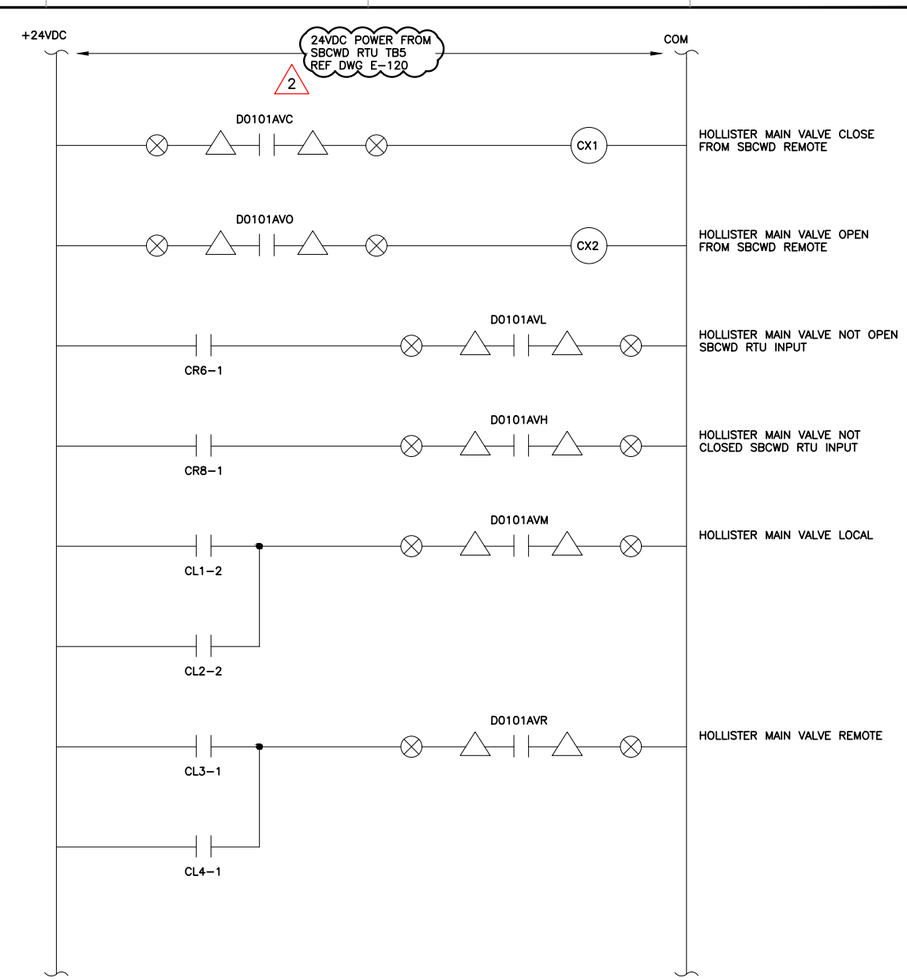

LEGEND

- SBCWD RTU
- SCVWD RTU
- FIELD WIRING
- ACR — ACTUATOR CONTROL RELAY

NOTE:

1. ACTUATOR CONTROL RELAY PROVIDED BY MANUFACTURER ACR WILL BE SET UP FOR INCHING TYPE OF CONTROL.

REV	DESCRIPTION	DATE	APPR.
1	ADDENDUM #1	07/17	TL
2	ADDENDUM #2	07/21	TL

ADDENDA DRAWING 07-21-17

REFERENCE INFORMATION AND NOTES

DATE 07-21-17
DESIGN N. MORAR
DRAWN A. ABDEL
CHECKED A. TAILOR

ENGINEERING CERTIFICATION
REGISTERED PROFESSIONAL ENGINEER NAGIN MORAR No. C048667 CONTROL SYSTEMS STATE OF CALIFORNIA
07.21.2017
PROJECT ENGINEER DATE

Santa Clara Valley Water District

PROJECT NAME AND SHEET DESCRIPTION:
PACHECO CONDUIT INSPECTION AND REHABILITATION PROJECT
HOLLISTER MAIN VALVE CONTROL SCHEMATIC

SCALE: NOT TO SCALE
VERIFY SCALES: 0 — 1"
BAR IS ONE INCH ON ORIGINAL DRAWING. IF NOT ONE INCH ON THIS SHEET, ADJUST SCALES ACCORDINGLY
PROJECT NUMBER: 91214001
SHEET CODE: 1 E-118
SHEET NUMBER: 55.26 OF 55

USERNAME: AmirAbde 7/21/2017 9:14 AM
FILENAME: K:\Active Projects\MP-91214001\PACHECO PL REHAB PROJECT\SHEETS\ADDENDA 2\E-118.dwg
DOCUMENT NUMBER: PPP-I-9121-XXXXX

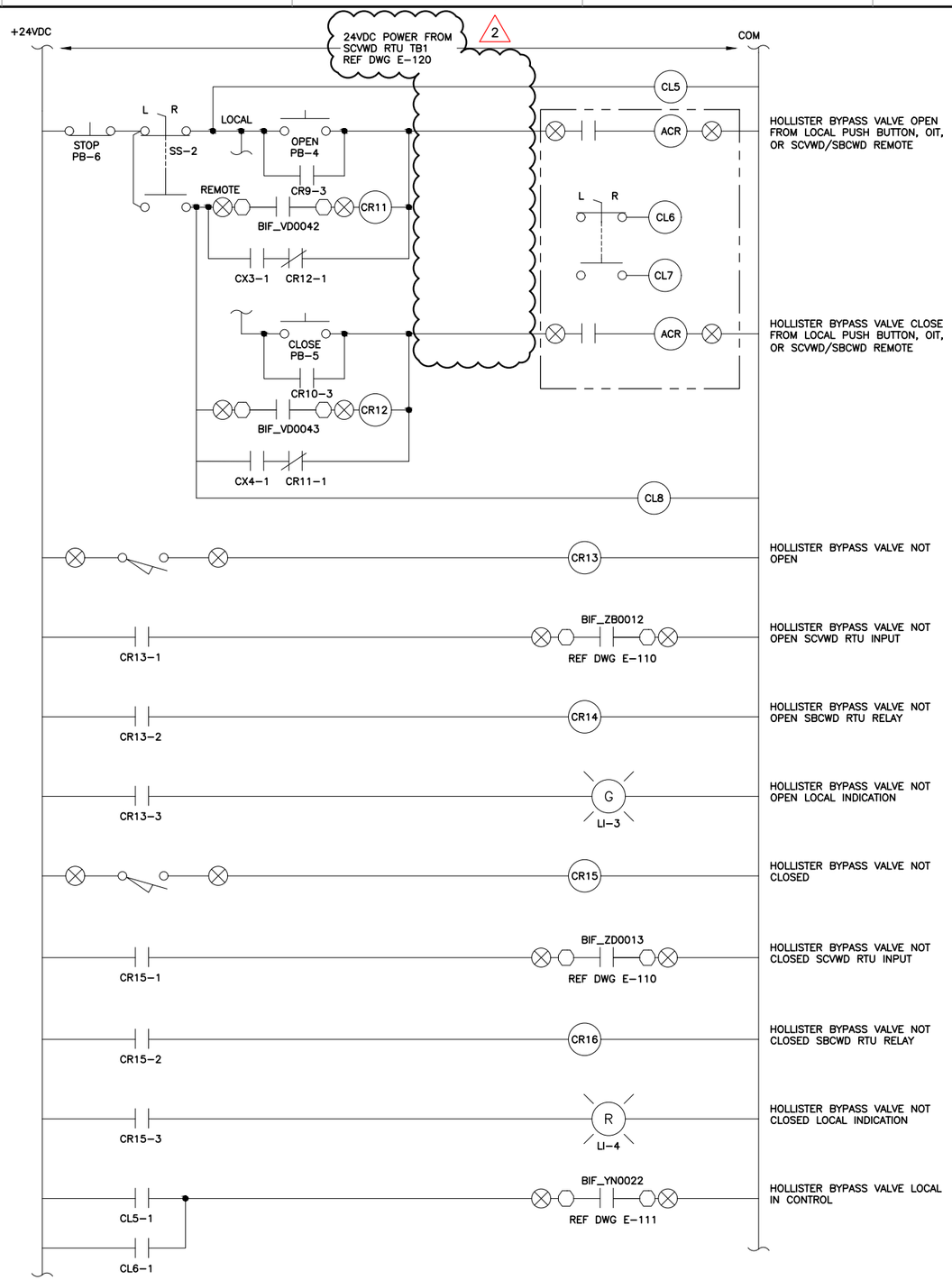

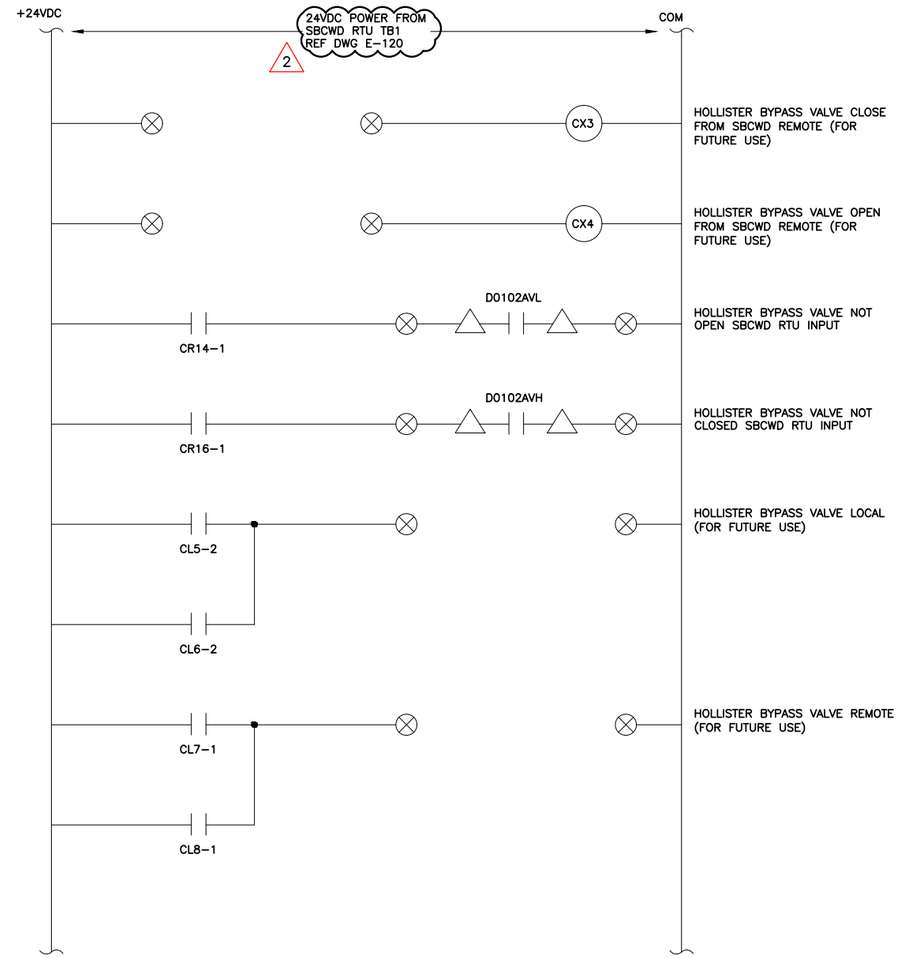

LEGEND

- SBCWD RTU
- SCVWD RTU
- FIELD WIRING
- ACR — ACTUATOR CONTROL RELAY

NOTE:

1. ACTUATOR CONTROL RELAY PROVIDED BY MANUFACTURER ACR WILL BE SET UP FOR INCHING TYPE OF CONTROL.

REV	DESCRIPTION	DATE	APPR.
1	ADDENDUM #1	07/17	TL
2	ADDENDUM #2	07/21	TL

ADDENDA DRAWING 07-21-17

REFERENCE INFORMATION AND NOTES

DATE 07-21-17
DESIGN N. MORAR
DRAWN A. ABDEL
CHECKED A. TAILOR

ENGINEERING CERTIFICATION
REGISTERED PROFESSIONAL ENGINEER NAGIN MORAR No. C048567 CONTROL SYSTEMS STATE OF CALIFORNIA
07.21.2017
PROJECT ENGINEER DATE

Santa Clara Valley Water District

PROJECT NAME AND SHEET DESCRIPTION:
PACHECO CONDUIT INSPECTION AND REHABILITATION PROJECT
HOLLISTER BYPASS VALVE CONTROL SCHEMATIC

SCALE: NOT TO SCALE
VERIFY SCALES: 0 — 1"
BAR IS ONE INCH ON ORIGINAL DRAWING IF NOT ONE INCH ON THIS SHEET, ADJUST SCALES ACCORDINGLY

PROJECT NUMBER: 91214001
SHEET CODE: 1 E-119
SHEET NUMBER: 55.27 OF 55

DOCUMENT NUMBER: PPP-I-9121-XXXXX

USERNAME: AmirAbde 7/21/2017 9:14 AM
FILENAME: K:\Active Projects\MP-91214001\PACHECO PL REHAB PROJECT\SHEETS\ADDENDA 2\E-119.dwg

BILL OF MATERIALS

ITEM	QTY	DEVICE	DESCRIPTION	MANUFACTURER	PART NUMBER
1	1	BIF TERMINATION CABINET	NEMA TYPE 3R WALL-MOUNT ENCLOSURE 48"H x 36"W x 16"D	HOFFMAN	CSD483616
2	1	–	ENCLOSURE BACK PANEL	HOFFMAN	CP4836
3	1	CB1, 2, 4	24VDC 1-POLE 5A DIN-RAIL MOUNTED CIRCUIT BREAKER	EATON	FAZ-C5-1-NA-SP
4	*	–	35MM DIN RAIL	–	–
5	*	–	1.5" WIRE MANAGEMENT (GRAY)	–	–
6	2	LI-1, 3	24VDC PUSH-TO-TEST INDICATING PILOT LIGHT, GREEN	ALLEN-BRADLEY	800T-QT24G
7	2	LI-2, 4	24VDC PUSH-TO-TEST INDICATING PILOT LIGHT, RED	ALLEN-BRADLEY	800T-QT24R
8	2	SS-1, 2	24VDC SELECTOR SWITCH, 2-POSITION (LOCAL-REMOTE)	ALLEN-BRADLEY	800T-H2A
9	2	PB-1, 3	24VDC PUSH BUTTON, RED (NO)	ALLEN-BRADLEY	800T-A6A
10	2	PB-2, 4	24VDC PUSH BUTTON, GREEN (NO)	ALLEN-BRADLEY	800T-A1A
11	2	PB-3, 6	24VDC PUSH BUTTON, BLACK (NC)	ALLEN-BRADLEY	800T-A2A
12	8	CR1, 2, 5, 7, 9, 10, 13, 15	24VDC 4-POLE RELAY W/ LED INDICATING LIGHT	IDEC	RH4B-UL24VDC
13	8	–	DIN MOUNT 4-POLE RELAY BASE	IDEC	SH4B-05
14	20	CR3, 4, 6, 8, 11, 12, 14, 16 CX1, 2, 3, 4 CL1, 2, 3, 4, 5, 6, 7, 8	24VDC 2-POLE RELAY W/ LED INDICATING LIGHT	IDEC	RH2B-UL24VDC
15	20	–	DIN MOUNT 2-POLE RELAY BASE	IDEC	SH2B-05
16	1	LIGHT	24VDC PANEL LIGHT	–	–
17	1	CB3, 5	24VDC 1-POLE 3A DIN-RAIL MOUNTED CIRCUIT BREAKER	EATON	FAZ-C3-1-NA-SP
18	10	TB1	35MM DIN-RAIL MOUNT TERMINAL BLOCK	PHOENIX CONTACT	3004362
19	90	TB2, 3, 4	35MM DIN-RAIL MOUNT TERMINAL BLOCK	PHOENIX CONTACT	3004362
20	*	–	35MM DIN-RAIL TERMINAL BLOCKS END COVERS	PHOENIX CONTACT	3003020

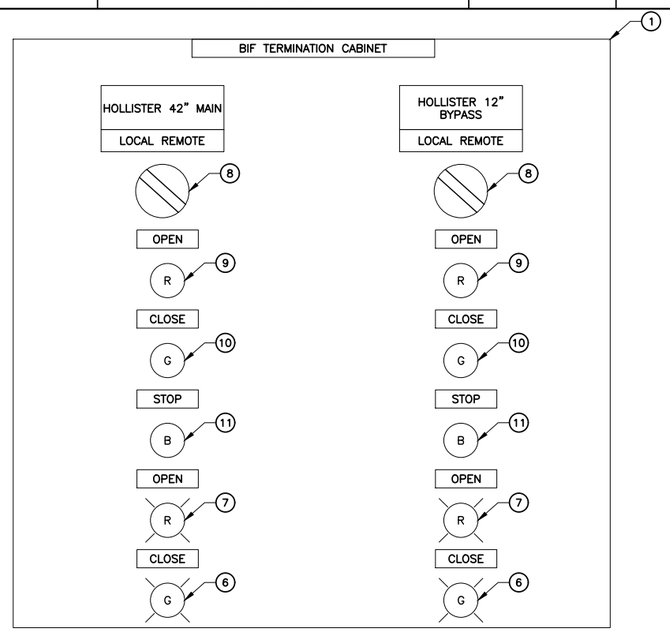

HOLLISTER TERMINATION CABINET (EXTERIOR)

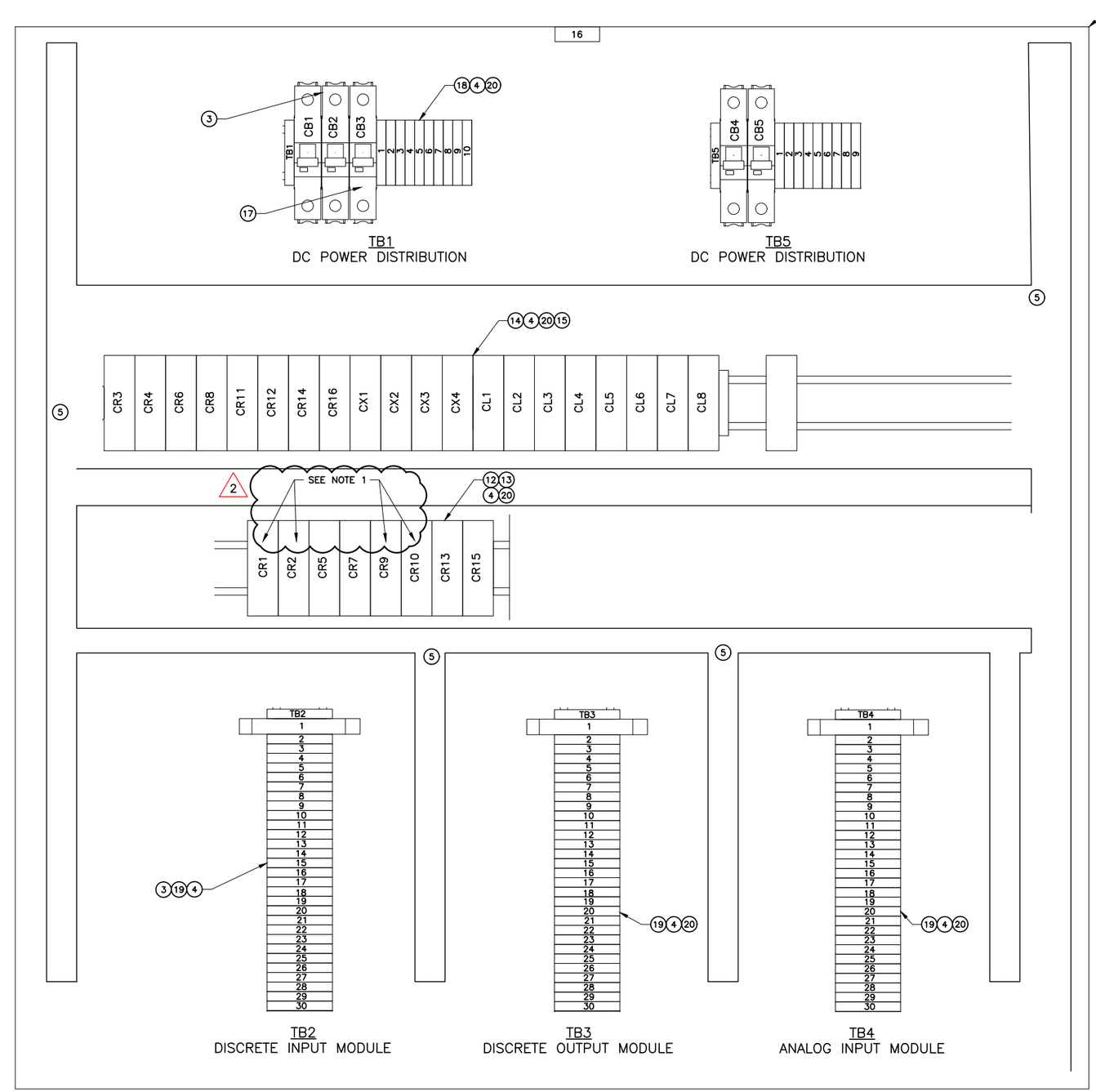

HOLLISTER TERMINATION CABINET (INTERIOR)

REV	DESCRIPTION	DATE	APPR.
1	ADDENDUM #1	07/17	TL
2	ADDENDUM #2	07/21	TL

ADDENDA DRAWING 07-21-17

REFERENCE INFORMATION AND NOTES

1. SPARE RELAY FOR FUTURE USE (CR1, CR2, CR9, AND CR10).

DATE 07-21-17
DESIGN N. MORAR
DRAWN A. ABDEL
CHECKED A. TAILOR

ENGINEERING CERTIFICATION
REGISTERED PROFESSIONAL ENGINEER NAGIN MORAR No. C-46867 CONTROL SYSTEMS STATE OF CALIFORNIA
07.21.2017
PROJECT ENGINEER DATE

Santa Clara Valley Water District

PROJECT NAME AND SHEET DESCRIPTION:

PACHECO CONDUIT INSPECTION AND REHABILITATION PROJECT

HOLLISTER TERMINATION CABINET

SCALE: NOT TO SCALE
VERIFY SCALES: 0 1"
BAR IS ONE INCH ON ORIGINAL DRAWING. IF NOT ONE INCH ON THIS SHEET, ADJUST SCALES ACCORDINGLY

PROJECT NUMBER: 91214001
SHEET CODE: E-120
SHEET NUMBER: 55.28 OF 55

USERNAME: AmirAbde 7/21/2017 9:14 AM
FILENAME: K:\Active Projects\MP-91214001\PACHECO PL REHAB PROJECT\SHEETS\ADDENDA 2\E-120.dwg

DOCUMENT NUMBER: PPP-I-9121-XXXXX

CAPITAL PROGRAM SERVICES
5750 ALMADEN EXPRESSWAY
SAN JOSE, CA 95118-3686
TELEPHONE (408) 630-3088
FACSIMILE (408) 979-5631
www.valleywater.org
scvwdplanroom@valleywater.org

Notification of this Addendum is transmitted via email to all current plan holders. This Addendum is posted on the District website at www.valleywater.org/Programs/Construction.aspx.

July 28, 2017

ADDENDUM NO. 3
TO CONTRACT DOCUMENTS FOR THE
PACHECO CONDUIT INSPECTION AND REHABILITATION PROJECT
Project No. 91214001 & 95084002

Contract No. C0629

Notice is hereby given to Prospective Bidders that the Contract Documents are modified as hereinafter set forth.

SPECIFICATIONS AND CONTRACT DOCUMENTS

TECHNICAL PROVISIONS

Article 42.02. Internal CFRP Liner Repair of Distressed PCCP

DELETE 1.04.1B.2.

GENERAL QUESTIONS AND RESPONSES

QUESTION 1. Bid items 54 & 55 call for lump sum prices for internal pipeline support. Due to unknowns with scope of work necessary inside the pipe regarding ventilation & access such as; number of locations, number of concurrent locations necessary, location along circumference of pipe, number of locations on high angle or low angle areas, etc., we suggest making these T&M items.

RESPONSE 1. No changes will be made to the bid table at this point.

QUESTION 2. Bid item 57 asks for a linear foot price for internal concrete repair. There are too many variables present to accurately estimate a linear foot price such as; location on crown/side/invert of pipe, necessary access, presence of leakage water, amount of repair per location, type of repair at

each location, distance between locations, number of ventilation setups necessary, etc. We suggest making this a T&M item.

RESPONSE 2. No changes will be made to the bid table at this point.

QUESTION 3. Bid item 59 asks for a square foot price for internal cement mortaring. There are too many variables present to accurately estimate a square foot price such as; location on crown/side/invert of pipe, necessary access, presence of leakage water, amount of patching per location, distance between locations, number of ventilation setups necessary, etc. We suggest making this a T&M item.

RESPONSE 3. No changes will be made to the bid table at this point.

QUESTION 4. Bid item 60 asks for a linear inch price for welding. There are too many variables present to accurately estimate a linear inch price such as; location on crown/side/invert of pipe, necessary access, presence of leakage water, amount of welding per location, distance between locations, weld detail, number of ventilation setups necessary, etc. We suggest making this a T&M item.

RESPONSE 4. No changes will be made to the bid table at this point.

QUESTION 5. Bid item 61 asks for a cubic foot price for debris removal. There are too many variables present to accurately estimate a cubic foot price such as; location in pipe, distance from access point, amount of debris at each location, number of locations, distance between locations, number of ventilation setups, etc. We suggest making this a T&M item.

RESPONSE 5. No changes will be made to the bid table at this point.

QUESTION 6. Please provide capacities of the hydraulic reservoir tank and accumulator tank for draining and disposal.

RESPONSE 6. The hydraulic reservoir tank and accumulator tank will not be used for dewatering. Dewatering will occur at the pump out and blowoff sites.

QUESTION 7. Corrosion control specs call for multiple items, including test stations, wire and cable routing, etc., reference the drawings for location and installation details; however, these details do not appear on the drawings, only ST-01 Detail 1 is provided.

RESPONSE 7. The details in the drawings have sufficient information needed for the Contractor.

QUESTION 8. Spec 42.02 Section 104.1B2 references OSHA mining and tunnel division requirements for CFRP Liner Repair. Does this project fall under Cal OSHA mining and tunnel division, and if so, what is the classification?

RESPONSE 8. Tunnel entry will be made under Cal OSHA General Industrial Safety Orders (Confined Space Orders). Tunnel entry will not be under Tunnel Safety Orders provided adequate ventilation is achieved.

QUESTION 9. After weld repairs and prior to mortar lining repair, is any coating of the steel required?

RESPONSE 9. All steel needs to be coated, even if it is encased in concrete.

QUESTION 10. Please confirm that the District Biologist will cover monitoring of critical habitats.

RESPONSE 10. As stated in the project addendums, the Contractor Biologist will handle the monitoring.

QUESTION 11. If bird deterrence measures become necessary, how will they be paid? More information is needed, such as estimated number of locations, type of deterrence measures, etc. to forward price this work. We suggest making this a T&M item.

RESPONSE 11. Please see biological technical memorandum and biological opinion in Addendum 2. For payment, please refer to Section 19.07.09 of the Specifications.

QUESTION 12. A spec section for contact grouting is included but not shown in the plans. Where will this work take place?

RESPONSE 12. Article 42.01. Contact and Pressure Grouting was removed as part of Addendum No. 2.

QUESTION 13. Please provide the level of Contractor support necessary for tunnel and pipe inspection.

RESPONSE 13. Please see Article 31.07. for support requirements for the electromagnetic pipe inspection. The inspection will begin after Milestone 2 is complete.

QUESTION 14. Please provide the level of Contractor support necessary for fiber optic acoustic monitoring system installation work such as; number of days they will be performing work inside the pipe, number of locations each day, number of concurrent locations each day, number of employees, and work day durations.

RESPONSE 14. This is part of the Milestone 3 work. Addendum No. 2 had more information in Article 15.03.02., Coordination with Others, about the Pipe section runs. Runs are used to divide up the work for the fiber optic monitoring system installation. Three persons are expected on site for the installation. It is expected that only one pipe section run will be worked on per day.

QUESTION 15. For ventilation design purposes, how many people other than Contractor personnel are expected in the pipe during inspection and fiber optic acoustic monitoring system installation?

RESPONSE 15. For pipe inspection, the District is expecting about five (5) persons to be in the pipe. For Fiber optic installation, the District is expecting about two (2) persons to be in the pipe.

QUESTION 16. Per section 20.04.02 “Contractor’s Quality Control Staffing Requirements” we understand an independent Field QC Manager along with a Lead Test Coordinator, Mechanical Inspector, Certified Welding Inspector, and NACE CIP Level 3 coating inspector will be required. It is our understanding that Electrical and Civil QC will not be required and the extent of mechanical work will be installation of owner supplied valves and blowoffs.

RESPONSE 16. Correct. An Electrical and Civil QC are not required.

QUESTION 17. Some locations provided in the work tables on sheets G-4 through G-7 call for Support for Third Party Contractor Work. Please provide more information such as; number of days third party contractors will be performing work inside the pipe, number of locations each day, number of concurrent locations each day, number of employees, and work day durations.

RESPONSE 17. The third-party contractor work references the fiber optic installation contractor who will be installing the fiber optic monitoring system in Milestone 3.

QUESTION 18. Spec 31.07-3.02.B. calls for ventilation to be reviewed each morning prior to installation and removed each night. Is it the expectation to have forced air ventilation set up at each work site every day and removed each night, or can a larger section of pipe be ventilated and left in place for multiple days?

RESPONSE 18. The forced air ventilation system would be set up on days for the pipe inspection and the fiber optic installation. This should be found in the Milestone portion of the Specifications and in Article 31.07.

THIS ADDENDUM NO. 3, WHICH CONTAINS 5 PAGES AND NO ATTACHMENTS, IS ATTACHED TO AND IS A PART OF THE SPECIFICATIONS AND CONTRACT DOCUMENTS FOR THIS PROJECT.

Katherine Oven

Date: 7/28/2017

Katherine Oven, P.E.
Deputy Operating Officer
Water Utility Capital Division

Project Delivery Process

Pacheco Conduit Inspection and Rehabilitation Project – Project No. 91214001 & 95084002

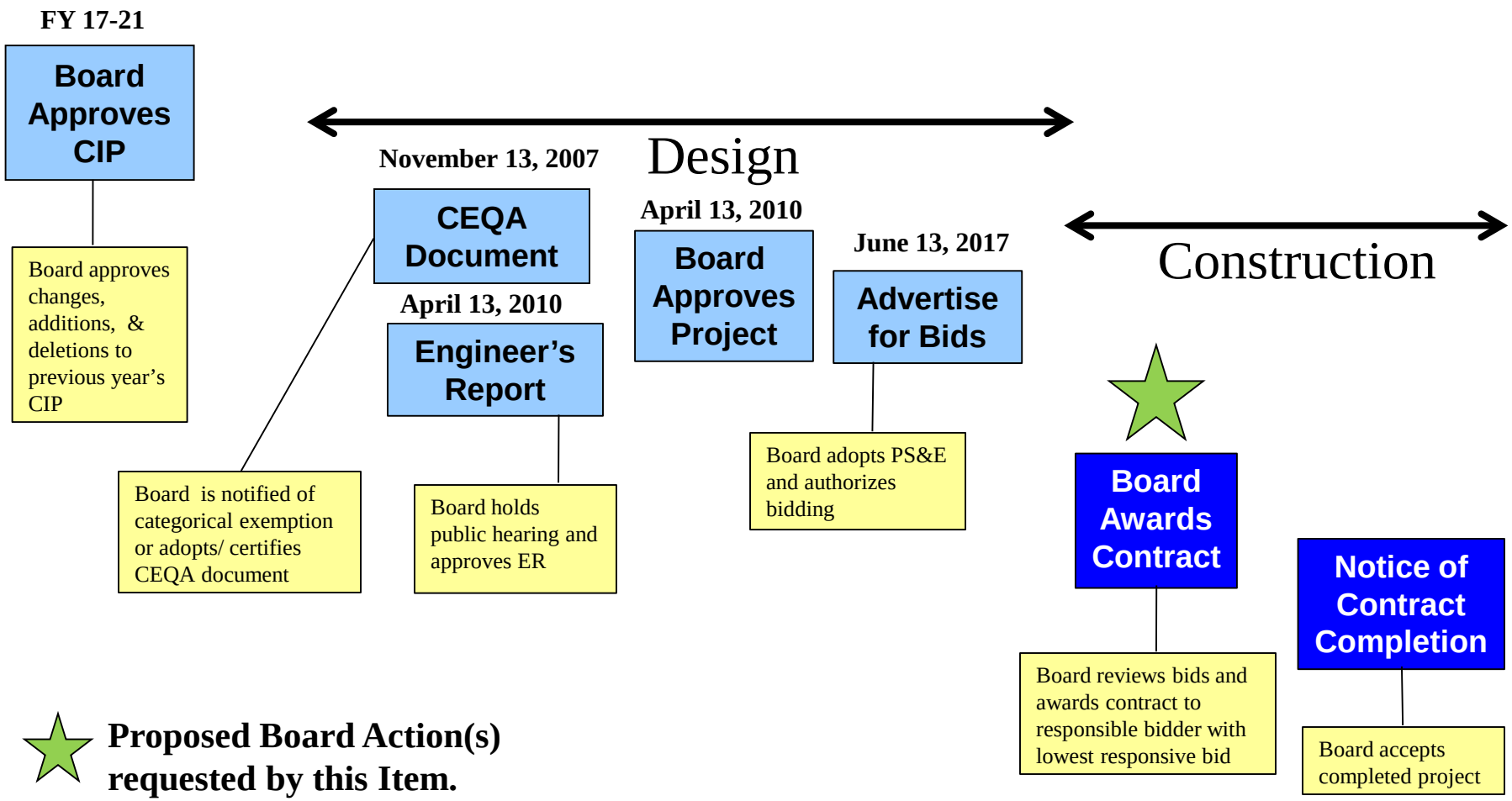

Proposed Board Action(s) requested by this Item.

Pacheco Conduit Inspection and Rehabilitation Project – Project No. 91214001 & 95084002

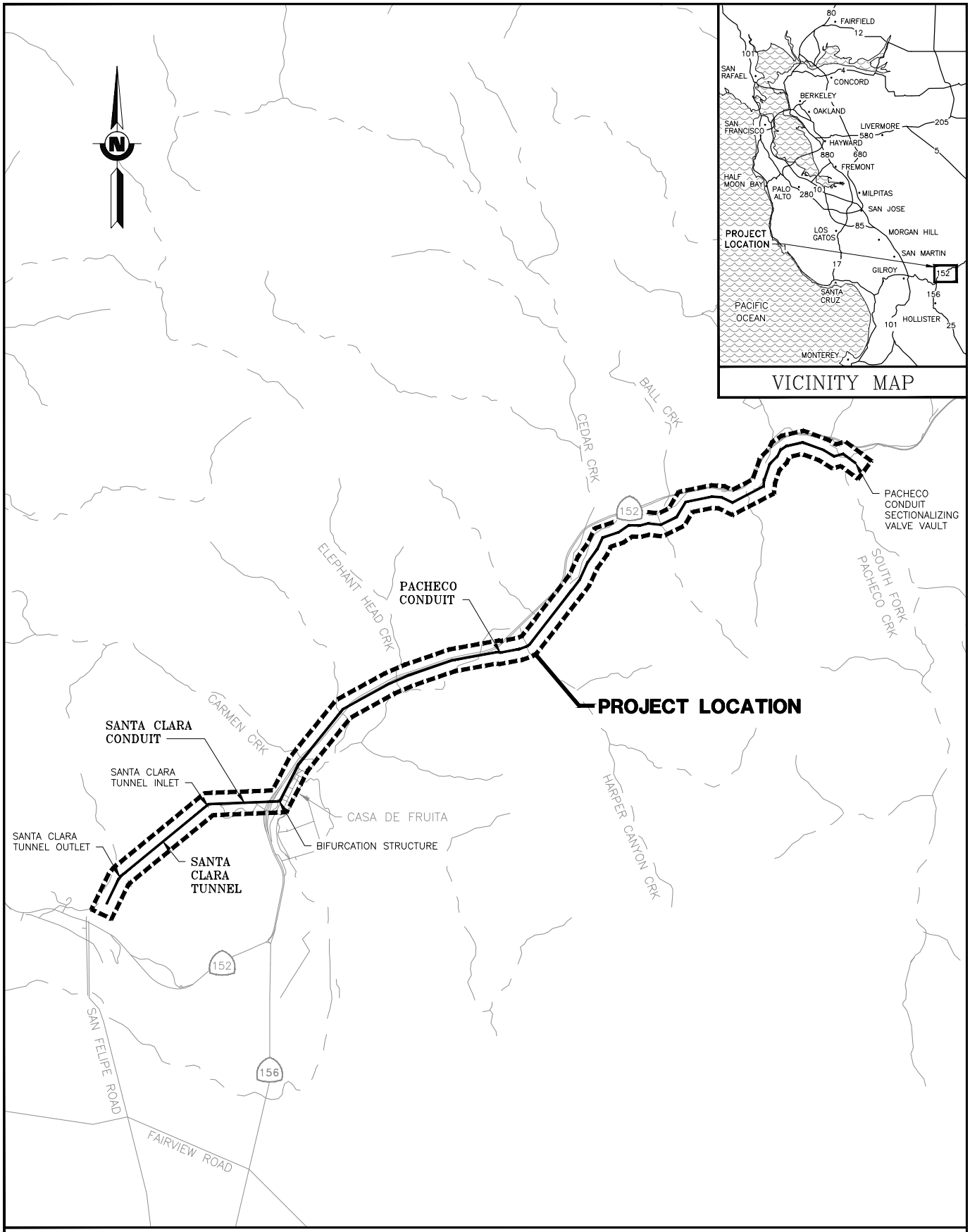

PROJECT LOCATION MAP
SCALE: N.T.S.

Santa Clara Valley Water District

File No.: 17-0387

Agenda Date: 8/8/2017
Item No.: 7.1.

BOARD AGENDA MEMORANDUM

SUBJECT:
Recommended Positions on Federal Legislation: S 731 (Feinstein) and HR 1738 (Garamendi)-Sacramento-San Joaquin Delta National Heritage Area Establishment Act (Continued from May 23, 2017).

RECOMMENDATION:
Adopt positions of "Support" on S 731 (Feinstein) and HR 1738 (Garamendi)-Sacramento-San Joaquin Delta National Heritage Area Establishment Act.

SUMMARY:
S 731 (Feinstein) and HR 1738 (Garamendi)-Sacramento-San Joaquin Delta National Heritage Area Establishment Act
Recommendation: Support
Priority Recommendation: 2

This legislation would establish the Delta estuary as a National Heritage Area (NHA) to be managed by the Delta Protection Commission (Commission). The goal of the Commission is to ensure orderly, balanced conservation and development of Delta land resources and improved flood protection.

The bill authorizes $10 million in federal assistance over 15 years to provide matching grants to implement the locally developed Heritage Area management plan to promote environmental stewardship, heritage conservation, and economic development projects throughout the Delta. The federal share of the total cost of any activity under this Act is not to exceed 50 percent.

The bill would have no effect on water rights, water contracts or property rights and create no new regulatory authority or burden on local government or private citizens.

Response to Board Question Regarding Funding Amounts
During the May 23, 2017 Board meeting, a question was asked about whether the bill allocates specific funding amounts or funding percentages within the three project categories (environmental stewardship, heritage conservation, and economic development). The bill author's office has indicated that there are no specific allocations or percentages assigned in the bill language. They clarified that if the bill passes, the Commission would first develop a Heritage Area management

plan, at which time specifics such as percentage allocations among various grant categories would be considered.

Status:
S 731 was introduced on March 27, 2017, and referred to the Senate Energy and Natural Resources Committee. HR 1738 was introduced on March 27, 2017, and referred to the House Natural Resources Committee and on April 4, 2017, it was referred to the Subcommittee on Federal Lands.

Importance to the District:
Staff recommends a “Support” position on these bills.

The District has a strong interest in ensuring the Delta is environmentally healthy and stable. This bill would secure additional federal resources to ensure our interest is met. The bill will have no effect on water rights or water contracts and creates no new regulatory authority or burden on local government.

The District supported a previous version of this Act in the last Congressional session.

Pros

- Designation as an NHA will allow for additional federal resources to be provided.

- NHA designation is likely to increase public education about the Delta, thus building a constituency of persons interested in preserving, protecting, and enhancing the Delta.

Cons:

- None identified at this time.

FINANCIAL IMPACT:
None.

CEQA:
The recommended action does not constitute a project under CEQA because it does not have a potential for resulting in direct or reasonably foreseeable indirect physical change in the environment.

ATTACHMENTS:
None.

UNCLASSIFIED MANAGER:
Rachael Gibson, 408-630-2884

Santa Clara Valley Water District

File No.: 17-0465

Agenda Date: 8/8/2017
Item No.: 7.2.

BOARD AGENDA MEMORANDUM

SUBJECT:
Recommended Position on Federal Legislation - S 1464 (Feinstein) - Water Conservation Tax Parity Act.

RECOMMENDATION:
Adopt a position of "Support" on: S 1464 (Feinstein) - Water Conservation Tax Parity Act.

SUMMARY:
Adopt a position of "Support" on: S 1464 (Feinstein) - Water Conservation Tax Parity Act

This bill amends the Internal Revenue Code (IRC) of 1986 to expand the inclusion for certain conservation subsidies to include subsidies for water conservation and storm water management measures.

Currently, any rebate issued by the Santa Clara Valley Water District (District) or other utilities over the amount of $600 requires that a 1099 Federal tax form be issued to the recipient of that rebate.

This bill amends the IRC to clarify that these rebates are not taxable income.

On January 31, 2017, the Board of Directors took a position of support for the House of Representatives version of this bill (HR 448 (Huffman) - Water Conservation Tax Parity Act), which amends the same provision of tax code. That bill was referred to the House Ways and Means Committee in January and no hearing date has been scheduled.

Status: The bill was introduced on June 28, 2017 and referred to the Senate Finance Committee.

Importance to the District:

Pros:

- Energy consumers already enjoy a Congressionally-authorized tax exempt status for energy conservation rebates. This bill would support tax parity by clarifying tax-exempt status for water conservation and storm water management measures.

- Providing tax exempt status to water conservation rebates further incentivizes and promotes the implementation of water conservation measures for which rebates are offered, thereby increasing water conservation.

Cons: None at this time.

FINANCIAL IMPACT:
None.

CEQA:
The recommended action does not constitute a project under CEQA because it does not have a potential for resulting in direct or reasonably foreseeable indirect physical change in the environment.

ATTACHMENTS:
None.

UNCLASSIFIED MANAGER:
Rachael Gibson, 408-630-2884

Santa Clara Valley Water District

File No.: 17-0556

Agenda Date: 8/8/2017
Item No.: *7.3.

BOARD AGENDA MEMORANDUM

SUBJECT:
Update on Public Perception Poll and Proposed Public Education Campaign and Water Truck Designs.

RECOMMENDATION:
A. Receive update on the public opinion poll conducted June 7-11, 2017;

B. Provide input on proposed messaging and public education campaign; and

C. Select and approve artwork for water truck.

SUMMARY:

Public Perception Poll
For many years the District has conducted public perception polls to provide the Board and the District with accurate data regarding what the public thinks of the organization and of our work, as well as to illuminate opportunities to improve the public's understanding of and access to District services.

For the latest poll, the District contracted with EMC Research to update previous poll questions, track trend data, and test messaging about the District. The poll was conducted from June 7 to 11, 2017.

The results of the poll will be used to develop messaging that addresses areas of importance to the public and that will help the public to understand our work in those areas, as well as our place in the community. The messages will be part of a year-long internal and external effort to inform the community about who we are, what we do, and how to access District services. They will also be used to encourage engagement with the public, such as through volunteering.

To assist with the development of messages and to help draft a public education campaign to reach external parties, the District has secured PRxDigital, a company with a long history of assisting Silicon Valley organizations and businesses with their public education efforts. The execution of the recommended campaign will cost $200,000 funded by internal cost saving measures in division and District budgets.

A working group of staff members from various divisions of the District will provide input on the messaging, the external components of the campaign, and the best way to communicate this information to employees in their respective divisions. Messages developed as part of this campaign are expected to be disseminated to every employee and to become a part of all possible communications, from publications to videos to presentations and more. The goal of this effort is to ensure that all employees are aware of the campaign and include the educational messages in documents, presentations and other materials to the greatest extent practical. The proposed messages are listed in the presentation and require Board input.

Why work to improve public education about the District?
Understanding the critical services provided by the District is important to this organization's ability to accomplish its work and fulfill our mission to provide safe, clean water to Silicon Valley. To maintain the public's trust and confidence, it is important for residents and businesses to understand the District's commitment to protect water quality and supply and to provide flood protection and stream stewardship.

Messaging
The poll showed that some have strong ideas about the District and the work we do; but there are many who may not know or understand the purpose of the District.

Messages that emphasized preparedness for the future and commitment to protecting the environment promote the public's understanding of the District.

Branding
The poll will also tie into the District's future branding effort. Branding is an organization's endeavor to tell its own story, to tell the community what they can expect of it, and to express its purpose and its value to the public.

Staff will return to the Board in the fall with branding options that incorporate the results of the poll. Once a brand identity is identified, it should be reflected in a wide array of communications efforts, including providing on-message materials such as talking points, presentations and publications to Board members, an ad campaign, blog posts relating to the brand theme, videos, pitches to the media, and more.

In all these efforts, the Board's leadership will be valuable in shaping a message-driven District and connecting with the community.

Water Truck
Staff has developed artwork for the water truck that was included in the Fiscal Year 2017 budget and will be delivered in early fall. There are a few choices for images, including images from the District's

Value Our Water campaign; images from the Value of Water Coalition's campaign, which is a resource provided by the U.S. Water Alliance; and images promoting the District's high-quality water.

Staff has sought employee input on the artwork in order to provide input for the Board's consideration. The design options and the employee preferences will be included in the presentation for the Board's input.

FINANCIAL IMPACT:
The development of engagement messaging and a public education campaign will be funded through internal sources in the existing Fiscal Year 2018 budget, and it is anticipated that the efforts will cost approximately $200,000. If additional resources are required staff will return to the Board for a budget adjustment.

CEQA:
The recommended action does not constitute a project under CEQA because it does not have a potential for resulting in direct or reasonably foreseeable indirect physical change in the environment.

ATTACHMENTS:
*Supplemental Agenda Memo
*Supplemental Attachment 1

UNCLASSIFIED MANAGER:
Rick Callender, 408-630-2017

Santa Clara Valley Water District

File No.: 17-0542

Agenda Date: 8/8/2017
Item No.: *7.3.

SUPPLEMENTAL BOARD AGENDA MEMORANDUM

SUBJECT:
Update on Public Perception Poll and Proposed Public Education Campaign and Water Truck Designs.

REASON FOR SUPPLEMENTAL MEMORANDUM:
Adds finalized PowerPoint as Attachment 1.

RECOMMENDATION:
A. Receive update on the public opinion poll conducted June 7-11, 2017;

B. Provide input on proposed messaging and public education campaign; and

C. Select and approve artwork for water truck.

SUMMARY:
Public Perception Poll
For many years the District has conducted public perception polls to provide the Board and the District with accurate data regarding what the public thinks of the organization and of our work, as well as to illuminate opportunities to improve the public's understanding of and access to District services.

For the latest poll, the District contracted with EMC Research to update previous poll questions, track trend data, and test messaging about the District. The poll was conducted from June 7 to 11, 2017.

The results of the poll will be used to develop messaging that addresses areas of importance to the public and that will help the public to understand our work in those areas, as well as our place in the community. The messages will be part of a year-long internal and external effort to inform the community about who we are, what we do, and how to access District services. They will also be used to encourage engagement with the public, such as through volunteering.

To assist with the development of messages and to help draft a public education campaign to reach

external parties, the District has secured PRxDigital, a company with a long history of assisting Silicon Valley organizations and businesses with their public education efforts. The execution of the recommended campaign will cost $200,000 funded by internal cost saving measures in division and District budgets.

A working group of staff members from various divisions of the District will provide input on the messaging, the external components of the campaign, and the best way to communicate this information to employees in their respective divisions. Messages developed as part of this campaign are expected to be disseminated to every employee and to become a part of all possible communications, from publications to videos to presentations and more. The goal of this effort is to ensure that all employees are aware of the campaign and include the educational messages in documents, presentations and other materials to the greatest extent practical. The proposed messages are listed in the presentation and require Board input.

Why work to improve public education about the District?
Understanding the critical services provided by the District is important to this organization's ability to accomplish its work and fulfill our mission to provide safe, clean water to Silicon Valley. To maintain the public's trust and confidence, it is important for residents and businesses to understand the District's commitment to protect water quality and supply and to provide flood protection and stream stewardship.

Messaging
The poll showed that some have strong ideas about the District and the work we do; but there are many who may not know or understand the purpose of the District.

Messages that emphasized preparedness for the future and commitment to protecting the environment promote the public's understanding of the District.

Branding
The poll will also tie into the District's future branding effort. Branding is an organization's endeavor to tell its own story, to tell the community what they can expect of it, and to express its purpose and its value to the public.

Staff will return to the Board in the fall with branding options that incorporate the results of the poll. Once a brand identity is identified, it should be reflected in a wide array of communications efforts, including providing on-message materials such as talking points, presentations and publications to Board members, an ad campaign, blog posts relating to the brand theme, videos, pitches to the media, and more.

In all these efforts, the Board's leadership will be valuable in shaping a message-driven District and connecting with the community.

Water Truck
Staff has developed artwork for the water truck that was included in the Fiscal Year 2017 budget and will be delivered in early fall. There are a few choices for images, including images from the District's Value Our Water campaign; images from the Value of Water Coalition's campaign, which is a resource provided by the U.S. Water Alliance; and images promoting the District's high-quality water.

Staff has sought employee input on the artwork in order to provide input for the Board's consideration. The design options and the employee preferences will be included in the presentation for the Board's input.

FINANCIAL IMPACT:
The development of engagement messaging and a public education campaign will be funded through internal sources in the existing Fiscal Year 2018 budget, and it is anticipated that the efforts will cost approximately $200,000. If additional resources are required staff will return to the Board for a budget adjustment.

CEQA:
The recommended action does not constitute a project under CEQA because it does not have a potential for resulting in direct or reasonably foreseeable indirect physical change in the environment.

ATTACHMENTS:
Attachment 1: PowerPoint

UNCLASSIFIED MANAGER:
Rick Callender, 408-630-2017

Public perception poll and education campaign

Aug. 8, 2017

How does the public see the District?

Telephone Survey of Santa Clara County Voters

Conducted for: Santa Clara Valley Water District

EMC RESEARCH
MARKET & OPINION RESEARCH SERVICES

Santa Clara Valley Water District SM

June 2017

Methodology

- Telephone survey of registered voters in Santa Clara County conducted on both landlines and cell phones
- Conducted by trained, professional interviewers from June 7 – 11, 2017
- 400 completed interviews
- Margin of error: ± 4.9 percentage points
- Interviews conducted in English, Spanish, Chinese, and Vietnamese

Please note that due to rounding, some percentages may not add up to exactly 100%.

Key Findings

- Perceptions of the Santa Clara Valley Water District are largely positive
- Many do not have strongly defined attitudes about the District in either direction, leaving room to move perceptions in a more positive direction
- District priorities resonate with voters, and communication about the District's mission and values is highly compelling
- The District's focus on maintaining the health, safety, and reliability of the water supply aligns well with community priorities.

SCVWD Favorability

A majority views SCVWD favorably.

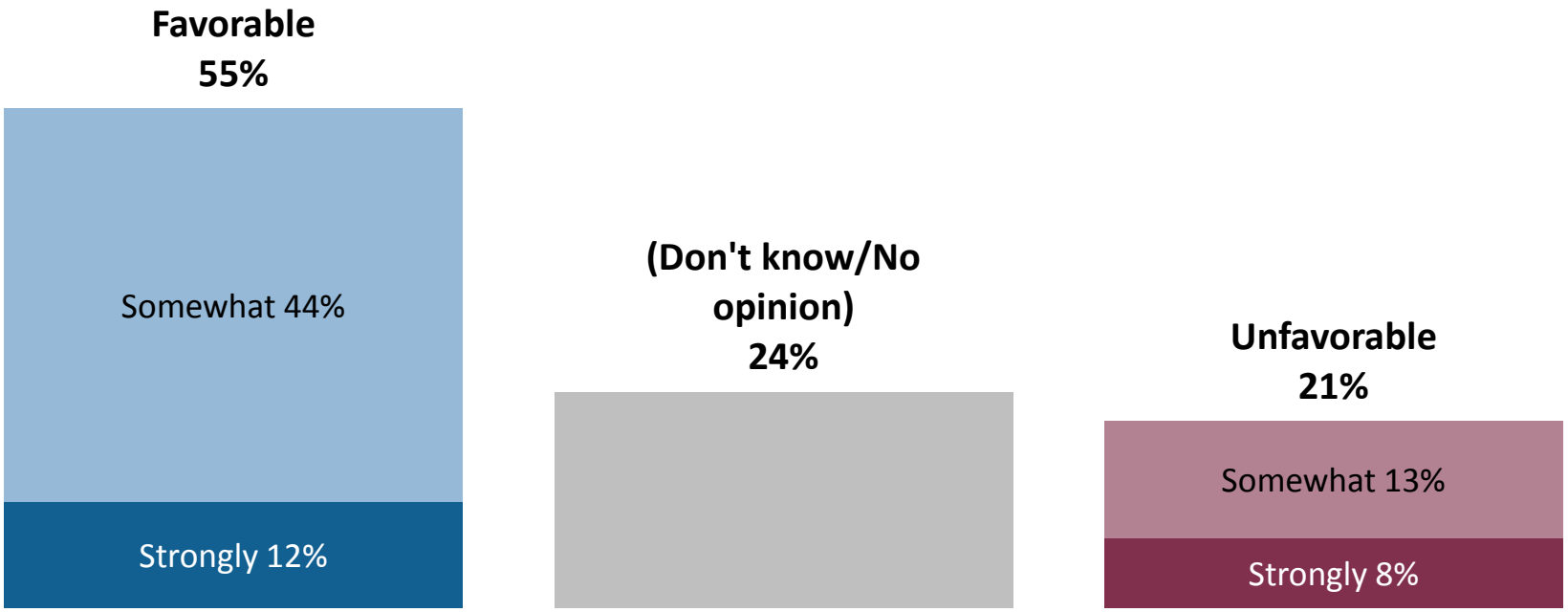

Q3. Please tell me if you have a strongly favorable, somewhat favorable, somewhat unfavorable or strongly unfavorable opinion of The Santa Clara Valley Water District

SCVWD Favorability Over Time

The District's favorability remains largely positive.

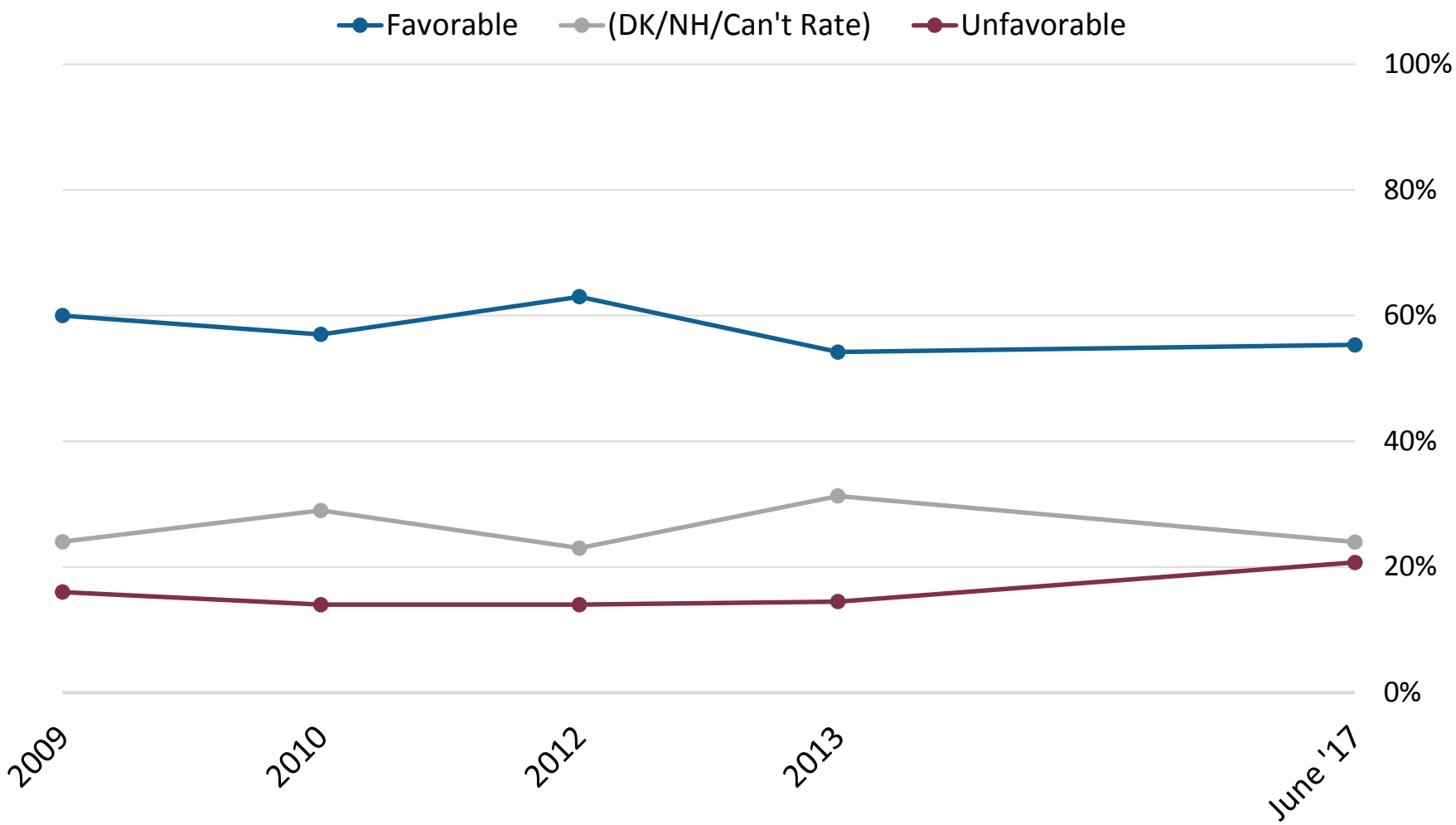

Q3. Please tell me if you have a strongly favorable, somewhat favorable, somewhat unfavorable or strongly unfavorable opinion of The Santa Clara Valley Water District?

SCVWD Job Ratings

The District gets its highest marks for encouraging conservation and ensuring a reliable water supply.

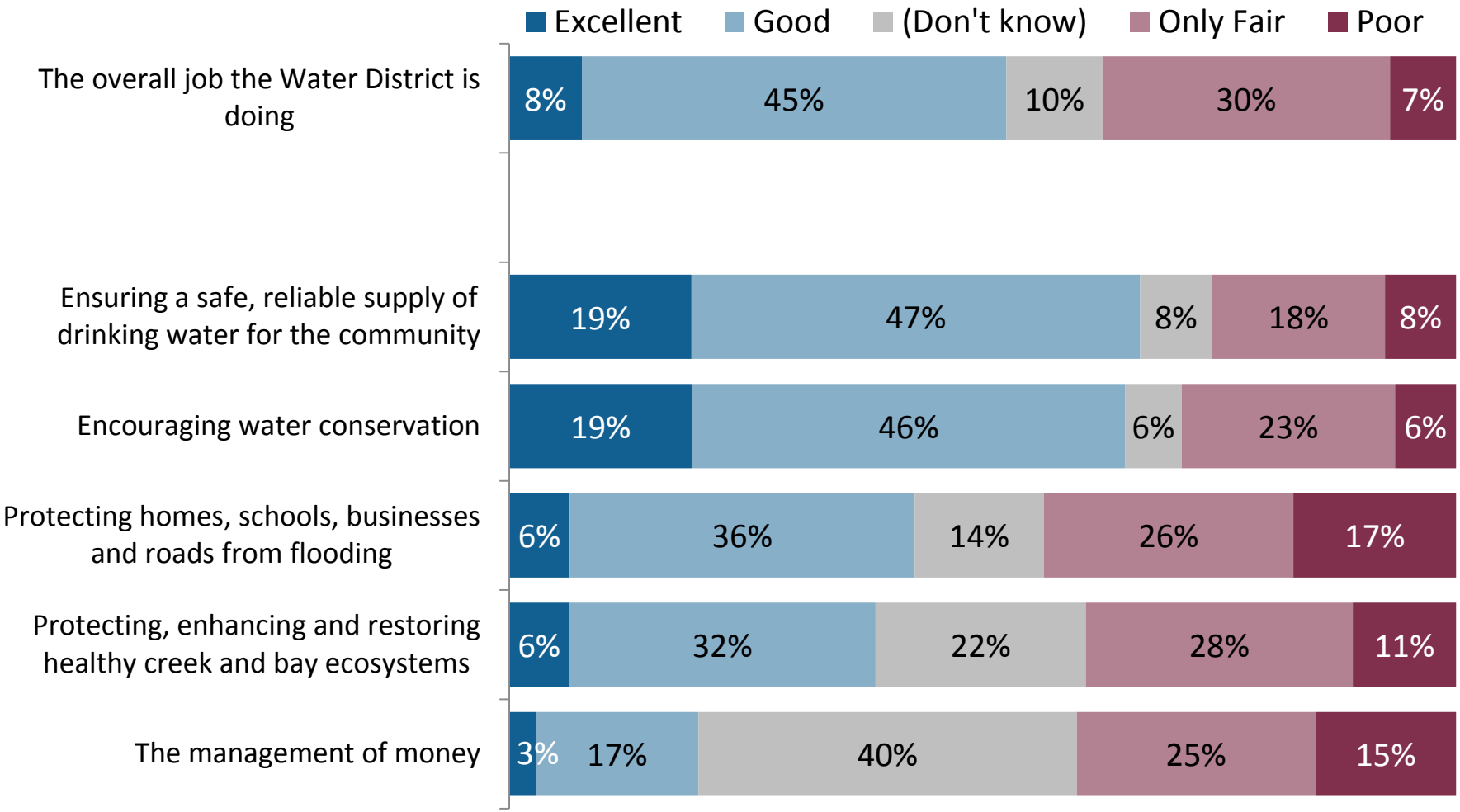

Q8-Q13. Thinking specifically about the Santa Clara Valley Water District, using a scale of excellent, good, only fair, or poor, please rate the job it is doing on each of the following responsibilities.

SCVWD Job Ratings Over Time

Following an extremely wet winter with significant flooding, job ratings on flood and ecosystem protection have declined, but ratings on reliability and conservation remain strong.

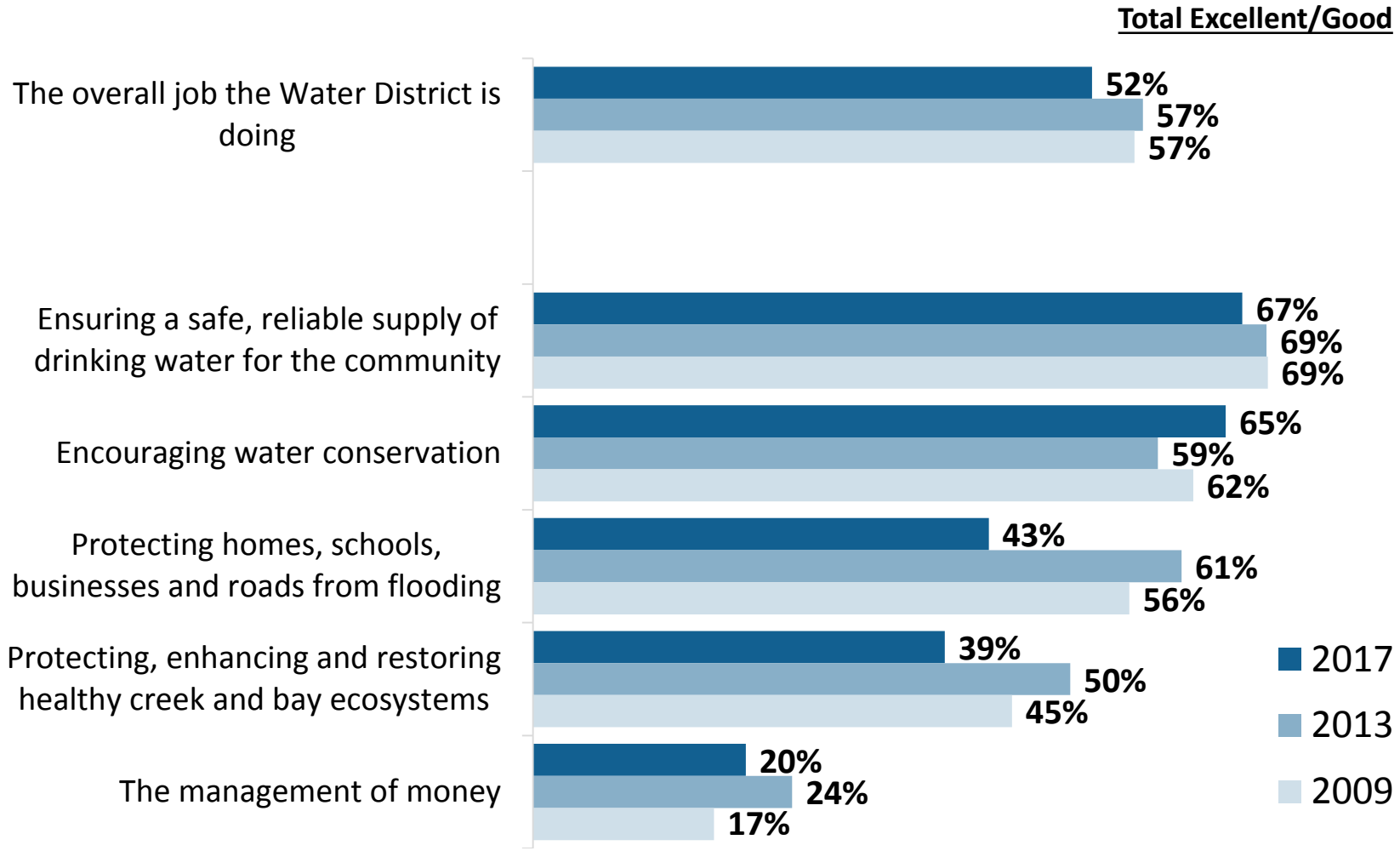

Q8-Q13. Thinking specifically about the Santa Clara Valley Water District, using a scale of excellent, good, only fair, or poor, please rate the job it is doing on each of the following responsibilities.

SCVWD Attributes

The attributes most commonly associated with the District are concern for the environment and being a reliable information source.

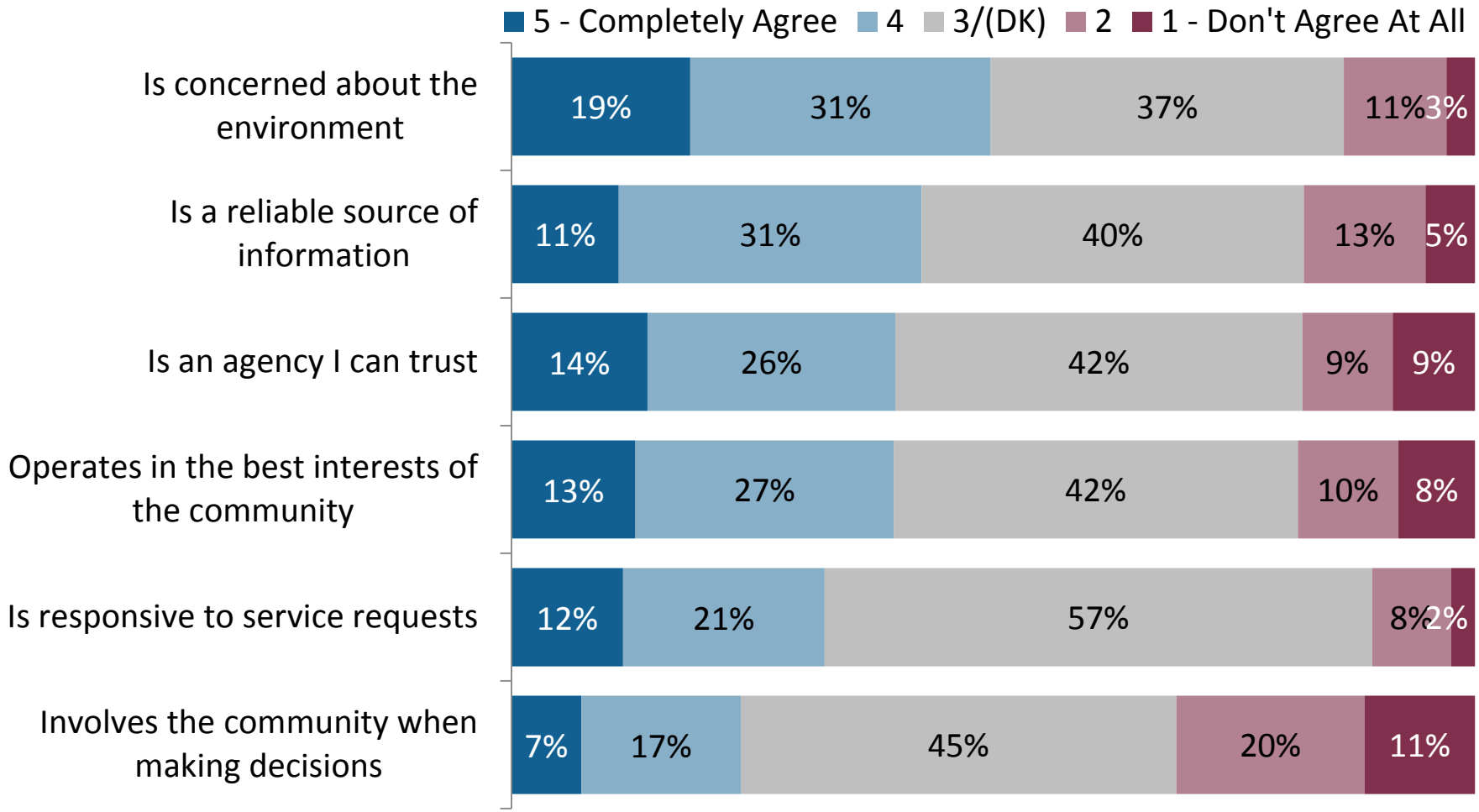

Q14-Q19. Now I'm going to read you a series of statements. I'd like you to tell me if you agree or disagree that the statement describes the SCVWD. Please rate each statement using a five-point scale, where 1 means you DON'T AGREE AT ALL that the statement describes the SCVWD and 5 means you COMPLETELY AGREE…

Top District Priorities

Priorities focused on health and safety—including removing toxins from creeks and reservoirs, replacing old infrastructure, and maintaining healthy creeks and streams—are most important.

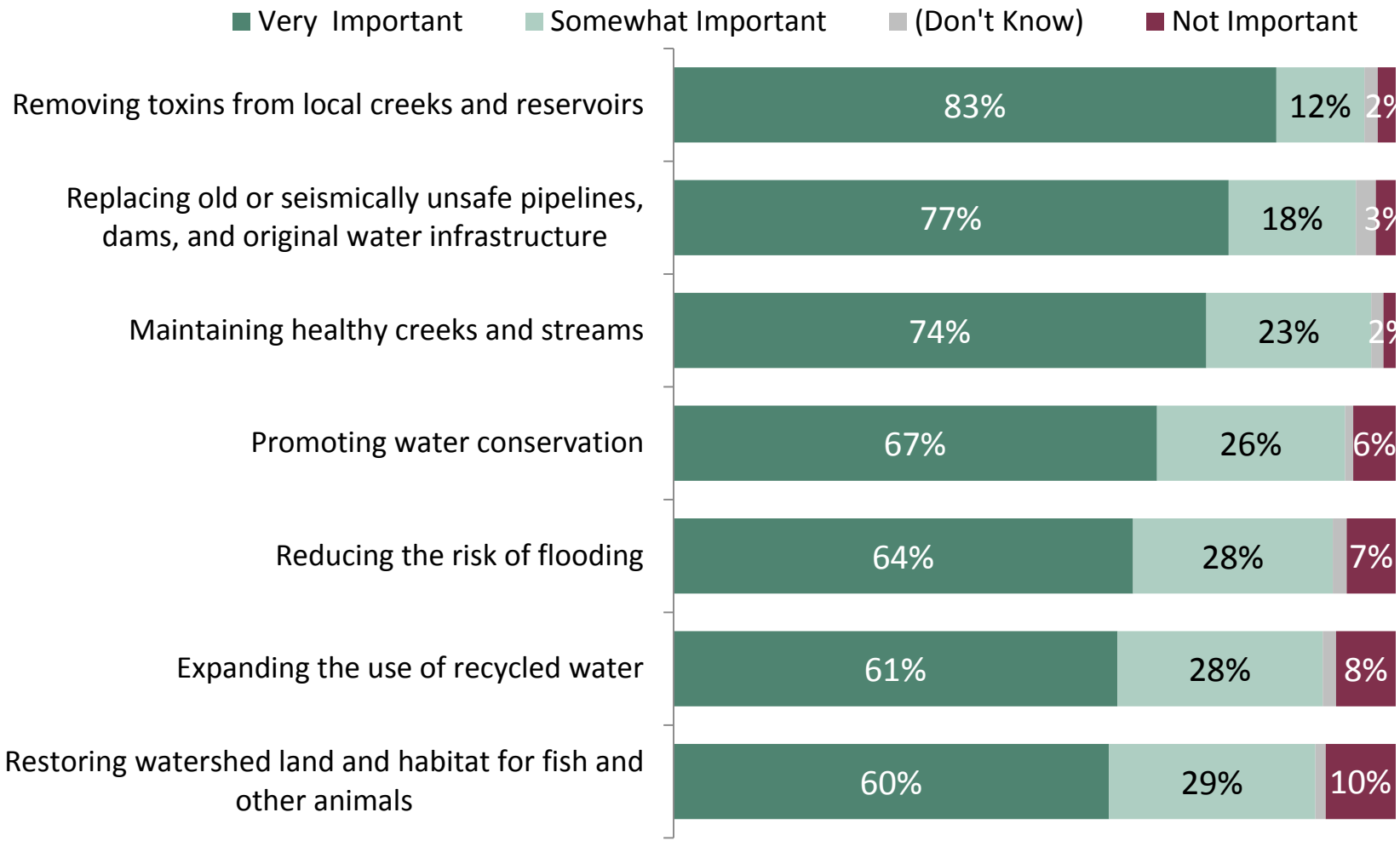

Q20-Q30. Now I'm going to read you a list of some of the projects and priorities for the Santa Clara Valley Water District. For each one, please tell me if the project or priority is very important, somewhat important, not very important, or not at all important to you.

SCVWD Mission and Values

Health and safety themes resonate strongly with the community.

The SCVWD provides Silicon Valley with **safe, clean water** for a healthy life, environment, and economy. **(84% compelling)**

The SCVWD is dedicated to **keeping residents and businesses safe** through its flood protection programs, like the lower and downtown Guadalupe River projects, which will protect 95,000 people who live and work along the river. **(81% compelling)**

We can trust the SCVWD to provide **clean, safe water** and guarantee our water supply for the future. **(78% compelling)**

Q31-36. Next I'd like to read you some statements about the Santa Clara Valley Water District. After each one, please tell me how compelling that statement was to you – very compelling, somewhat compelling, not too compelling, or not at all compelling.

SCVWD Mission and Values, Cont.

SCVWD's proactive efforts to prepare for the future and commitment to the environment also resonate strongly.

The SCVWD is focused on preparing for future wet and dry years to ensure Santa Clara County's 1.9 million residents have a reliable water supply no matter what extreme weather the changing climate brings. **(87% compelling)**

The SCVWD is committed to protecting our environment and is working to restore habitat along creeks and the bay, clean toxins from the water, and make sure water is used efficiently throughout our community. **(87% compelling)**

The SCVWD is making smart investments in new and innovative technologies like water recycling to make sure our water supply meets future needs. **(83% compelling)**

Q31-36. Next I'd like to read you some statements about the Santa Clara Valley Water District. After each one, please tell me how compelling that statement was to you – very compelling, somewhat compelling, not too compelling, or not at all compelling.

Contacts

Ruth Bernstein
510-550-8922
ruth@emcresearch.com

Jessica Polsky
510-550-8933
jessica@emcresearch.com

Sianna Ziegler
206-204-8045
sianna@emcresearch.com

Public education

Messages based on polling results

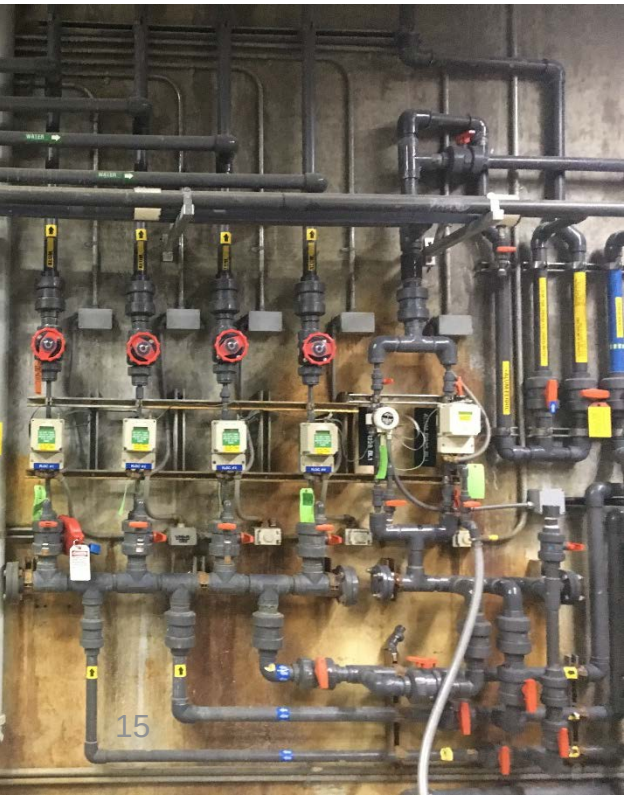

Help the public understand the District's services and how to access them

Why?

Messages

1 Water quality

2 Flood protection

3 Environmental protection

4 Infrastructure

Water Truck

Q1 Pick your favorite option for side A.

2

Option 2 – Most votes!

1

Water Truck

Q2 Pick your favorite option for side B.

2

Option 2 – Most votes!

1

Water Truck

Q3 Pick your favorite option for the back.

1

Option 1 – Most votes!

2

3

4

5

6

Water Truck

Q4 Pick your favorite option for the front.

1

2

3

Option 1 – Most votes!

Thank you