Santa Clara Valley Water District
Board of Directors Meeting

Teleconference Zoom Meeting

*AMENDED/APPENDED
AMENDED REGULAR MEETING
AGENDA

Tuesday, January 26, 2021
6:00 PM

***ITEMS AMENDED AND/OR APPENDED SINCE THE ORIGINAL PUBLICATION OF THIS AGENDA ARE IDENTIFIED BY AN ASTERISK (*) HEREIN**

District Mission: Provide Silicon Valley safe, clean water for a healthy life, enviornment and economy.

DISTRICT BOARD OF DIRECTORS
Tony Estremera, Chair - District 6
Gary Kremen, Vice Chair - District 7
John Varela - District 1
Barbara Keegan - District 2
Richard P. Santos - District 3
Linda J. LeZotte - District 4
Nai Hsueh - District 5

During the COVID-19 restrictions, all public records relating to an open session item on this agenda, which are not exempt from disclosure pursuant to the California Public Records Act, that are distributed to a majority of the legislative body, will be available to the public through the legislative body agenda web page at the same time that the public records are distributed or made available to the legislative body, or through a link in the Zoom Chat Section during the respective meeting. Santa Clara Valley Water District will make reasonable efforts to accommodate persons with disabilities wishing to participate in the legislative body's meeting. Please advise the Clerk of the Board Office of any special needs by calling (408) 265-2600.

RICK L. CALLENDER, ESQ.
Chief Executive Officer

MICHELE L KING, CMC
Clerk of the Board
(408) 265-2600
Fax (408) 266-0271
www.valleywater.org

Note: The finalized Board Agenda, exception items and supplemental items will be posted prior to the meeting in accordance with the Brown Act.

THIS PAGE INTENTIONALLY LEFT BLANK

Santa Clara Valley Water District
Board of Directors

*AMENDED/APPENDED AGENDA

***ITEMS AMENDED AND/OR APPENDED SINCE THE ORIGINAL PUBLICATION OF THIS AGENDA ARE IDENTIFIED BY AN ASTERISK (*) HEREIN**

Tuesday, January 26, 2021	6:00 PM	Teleconference Zoom Meeting

IMPORTANT NOTICES

This meeting is being held in accordance with the Brown Act as currently in effect under the State Emergency Services Act, the Governor's Emergency Declaration related to COVID-19, and the Governor's Executive Order N-29-20 issued on March 17, 2020 that allows attendance by members of the Board of Directors, District staff, and the public to participate and conduct the meeting by teleconference, videoconference, or both.

Members of the public wishing to address the Board during a video conferenced meeting on an item not listed on the agenda, or any item listed on the agenda, should use the "Raise Hand" or "Chat" tools located in Zoom meeting link listed on the agenda. Speakers will be acknowledged by the Board Chair in the order requests are received and granted speaking access to address the Board.

Santa Clara Valley Water District (District), in complying with the Americans with Disabilities Act (ADA), requests individuals who require special accommodations to access and/or participate in District Board meetings to please contact the Clerk of the Board's office at (408) 630-2711, at least 3 business days before the scheduled District Board meeting to ensure that the District may assist you.

This agenda has been prepared as required by the applicable laws of the State of California, including but not limited to, Government Code Sections 54950 et. seq. and has not been prepared with a view to informing an investment decision in any of Valley Water's bonds, notes or other obligations. Any projections, plans or other forward-looking statements included in the information in this agenda are subject to a variety of uncertainties that could cause any actual plans or results to differ materially from any such statement. The information herein is not intended to be used by investors or potential investors in considering the purchase or sale of Valley Water's bonds, notes or other obligations and investors and potential investors should rely only on information filed by the District on the Municipal Securities Rulemaking Board's Electronic Municipal Market Access System for municipal securities disclosures and Valley Water's Investor Relations website, maintained on the World Wide Web at https://emma.msrb.org/ and https://www.valleywater.org/how-we-operate/financebudget/investor-relations, respectively.

Under the Brown Act, members of the public are not required to provide identifying information in order to attend public meetings. Through the link below, the Zoom webinar program requests entry of a name and email address, and Valley Water is unable to modify this requirement. Members of the public not wishing to provide such identifying information are encouraged to enter "Anonymous" or some other reference under name and to enter a fictional email address (e.g., attendee@valleywater.org) in lieu of their actual address. Inputting such values will not impact your ability to access the meeting through Zoom.

Join Zoom Meeting:
https://valleywater.zoom.us/j/95401893376
Meeting ID: 954 0189 3376
Join by Phone:
1 (669) 900-9128, 95401893376#

1. CALL TO ORDER:

1.1. Roll Call.

1.2. Pledge of Allegiance/National Anthem.

1.3. Orders of the Day.

A. Approximate Discussion Time (Board); and
B. Adjustments to the Order of Agenda Items.

1.4. Time Open for Public Comment on any Item not on the Agenda.

Notice to the public: Members of the public who wish to address the Board on any item not listed on the agenda should access the "Raise Hand" or "Chat" tools located in Zoom meeting link listed on the agenda. Speakers will be acknowledged by the Board Chair in order requests are received and granted speaking access to address the Board. Speakers comments should be limited to three minutes or as set by the Chair. The law does not permit Board action on, or extended discussion of, any item not on the agenda except under special circumstances. If Board action is requested, the matter may be placed on a future agenda. All comments that require a response will be referred to staff for a reply in writing. The Board may take action on any item of business appearing on the posted agenda.

2. TIME CERTAIN:

6:00 PM

2.1. Santa Clara Valley Water District Government Relations Program Update and Legislative Outlook. 20-0896

Recommendation:

A. Receive information on the 2020 Santa Clara Valley Water District (Valley Water) government relations advocacy and stakeholder engagement program;
B. Receive update from federal and state consultants on 2020 accomplishments and 2021 legislative outlook; and
C. Provide input on current and future challenges, goals, and accomplishments since the last presentation to the Board of Directors.

Manager: Don Rocha, 408-630-2338

Attachments: Attachment 1: 2021 Legislative Proposals/Guiding Principles
Attachment 2: Key Legislation
Attachment 3: Community Events and Sponsorships
Handout 2.1-A: PowerPoint

Est. Staff Time: 15 Minutes

3. CONSENT CALENDAR: (3.1 - 3.5) (Est. Time: 5 Minutes)

Notice to the public: There is no separate discussion of individual consent calendar items. Recommended actions are voted on in one motion. If an item is approved on the consent vote, the specific action recommended by staff is adopted. Items listed in this section of the agenda are considered to be routine by the Board, or delegated to the Board Appointed Officers (BAOs) yet required by law or contract to be Board approved (EL-7.10). Any item may be removed for separate consideration at the request of a Board member. Whenever a resolution is on the consent calendar, a roll call vote will be taken on the entire calendar. Members of the public wishing to address the Board on any consent items should complete a Speaker Card and present it to the Clerk of the Board.

3.1. Adopt Resolution Setting Time and Date of Public Hearing on the Engineer's Report and CEQA Exemption Determination for the Pacheco Pumping Plant Electrical Current Limiting Fuse & Hydraulic Valve Operation System Upgrades, Small Capital Improvements, San Felipe Reach 1, Project No. 91214010, (Merced County, District 1). 20-1061

Recommendation: Adopt the Resolution SETTING TIME AND DATE OF PUBLIC HEARING ON THE ENGINEER'S REPORT AND CEQA EXEMPTION DETERMINATION FOR THE PACHECO PUMPING PLANT ELECTRICAL CURRENT LIMITING FUSE & HYDRAULIC VALVE OPERATIONS SYSTEM UPGRADES, to occur on February 09, 2021, at 1:00 PM by teleconference Zoom meeting.

Manager: Heath McMahon, 408-630-3126

Attachments:
- Attachment 1: Resolution
- Attachment 2: Engineer's Report
- Attachment 3: Notice of Public Hearing

*3.2. Adopt Plans and Specifications and Authorize Advertisement for Bids for the Lower Calera Creek Flood Protection Project, Project No. 40174005, Contract No. C0666 (Milpitas) (District 3). 21-0110

Recommendation:
A. Adopt Plans and Specifications and Authorize Advertisement for Bids for the Lower Calera Creek Flood Protection Project, per the Notice to Bidders; and
B. Authorize the Designated Engineer to issue addenda, as necessary, during the bidding process.

Manager: Rechelle Blank, 408-630-2632

Attachments:
- Attachment 1: Map
- Attachment 2: Notice to Bidders
- Attachment 3: Project Delivery Process Chart
- Attachment 4: Plans
- Attachment 5: Specifications
- *Handout 3.2-A: Revised Notice to Bidders Pg 5

*3.3. Adopt Plans and Specifications and Authorize Advertisement for Bids for the Anderson Dam Tunnel Project, Project No. 91864005, Contract No. C0663 (Morgan Hill) (District 1). 21-0097

Recommendation:

A. Adopt the plans and specifications and authorize advertisement for bids for the construction of the Anderson Dam Tunnel Project (Project), per the Notice to Bidders, exclusively to the list of Valley Water pre-qualified bidders; and
B. Authorize the Designated Engineer to issue addenda, as necessary, during bidding.

Manager: Christopher Hakes, 408-630-3796

Attachments:
Attachment 1: Notice to Bidders
Attachment 2: Project Delivery Process Chart
*Supplemental Agenda Memorandum
*Supplemental Attachment 1: Notice to Bidders
*Supplemental Attachment 2: Non-Disclosure Agreement

*3.4. Approval of Minutes. 21-0076

Recommendation: Approve the minutes.

Manager: Michele King, 408-630-2711

Attachments:
Attachment 1: 112420 Regular Meeting Minutes
*Attachment 2: 120820 Regular Meeting Minutes
*Attachment 3: 121520 Special Meeting Minutes
*Attachment 4: 010521 Special Meeting Minutes

*3.5. Accept the CEO Bulletin for the Weeks of January 8-21, 2021. 21-0051

Recommendation: Accept the CEO Bulletin.

Manager: Rick Callender, 408-630-2017

Attachments: Attachment 1: 012121 CEO Bulletin

REGULAR AGENDA:

4. BOARD OF DIRECTORS:

*4.1. Report of Former Board of Directors Chairperson Nai Hsueh, Upon Review of Investigation of May 27, 2020 Complaint Filed by Rev. Jethroe Moore, Against Directors Keegan and LeZotte. 21-0117

Recommendation: Review and Consider Findings in the Executive Summary of the investigative report.

Manager: Former Chairperson Nai Hsueh

Attachments: Attachment 1: 052720 Complaint, Rev. Jethroe Moore
Attachment 2: 011221 Investigative Report
*Handout 4.1-A: Ms. Rita Norton Comment
*Handout 4.1-B: Rev J Moore

*4.2. Approval of Redistricting Advisory Committee Nominations, Guidelines and Procedures, and First Meeting Agenda. 21-0071

Recommendation:
A. Approve the nominations for appointment to the Santa Clara Valley Water District 2021 Redistricting Advisory Committee;
B. Review and approve the recommended guidelines, direction and procedures for the Redistricting Advisory Committee, Water staff, and Board of Directors; and
C. Review and approve the agenda for the Redistricting Advisory Committee's first meeting, on March 17, 2021.

Manager: Don Rocha, 408-630-2338

Attachments: Attachment 1: Draft 031721 RAC Agenda
*Supplemental Agenda Memorandum
*Supplemental Attachment 1: Nominee Background Information
Handout 4.2-A: PowerPoint

Est. Staff Time: 10 Minutes

4.3. Consider the December 16, 2020 Board Audit Committee Recommendation to Receive and Discuss the Final Audit Report and Management Response for the District Counsel Audit, Conducted by TAP International, Inc. 20-1224

Recommendation: Consider the December 16, 2020, Board Audit Committee recommendation to receive and discuss the Final Audit Report and Management Response for the District Counsel Audit, conducted by TAP International, Inc.

Manager: Darin Taylor, 408-630-3068

Attachments: Attachment 1: Final Audit Report/Management Response

Est. Staff Time: 15 Minutes

*4.4. Consider the January 13, 2021 Board Audit Committee Recommendation to Add Evaluation of the Risk Management Function's Organizational Alignment to the Planned Risk Management Audit, at an Estimated Cost Range of $101,600 to $199,750. 21-0070

Recommendation: Approve the January 13, 2021 Board Audit Committee Recommendation to Add Evaluation of the Risk Management Function's Organizational Alignment to the Planned Risk Management Audit, at an Estimated Cost Range of $101,600 to $199,750.

Manager: Darin Taylor, 408-630-3068

Attachments: Attachment 1: Annual Audit Work Plan

Est. Staff Time: 5 Minutes

*4.5. Consider the December 16, 2020, Board Audit Committee Recommendations to have TAP International, Inc. Conduct the Next Tri-annual Risk Assessment that is due by October 2021, prior to the Expiration on June 30, 2021 of the Board Independent Auditing Services Agreement with TAP International, Inc.; and to Direct Staff to Initiate a Procurement Process to Enter into a New Board Independent Auditing Services Agreement that would be Effective on July 1, 2021. 20-1225

Recommendation:

A. Consider the December 16, 2020, Board Audit Committee recommendation to have TAP International, Inc. conduct the next tri-annual Risk Assessment that is due by October 2021 prior to the expiration on June 30, 2021 of the Board Independent Auditing Services Agreement with TAP International, Inc.;
B. Consider the December 16, 2020, Board Audit Committee recommendation to direct staff to initiate a procurement process to enter into a new Board Independent Auditing Services Agreement that would be effective on July 1, 2021; and
C. Provide final direction, as needed, based upon the Board Audit Committee recommendations.

Manager: Darin Taylor, 408-630-3068

Est. Staff Time: 5 Minutes

*4.6. Board Committee Reports. (PREVIOUSLY LISTED AS ITEM 4.4) 21-0074

Standing Reports (Summary or Verbal Report):
1. Delta Conveyance Design and Construction Authority (DCA) Update
2. Delta Conveyance Finance Authority (Finance Authority) Update

Board Committees (Summary or Meeting Agenda):
3. Board Audit Committee (BAC)
4. Board Policy and Planning Committee (BPPC)
5. Capital Improvement Program (CIP) Committee
6. Diversity and Inclusion (D&I) Ad Hoc Committee
7. Stream Planning and Operations Committee (SPOC)
8. Homeless Encampment Ad Hoc Committee (HEAHC)
9. Recycled Water Committee (RWC)
10. Water Conservation and Demand Management (WCDM) Committee
11. Water Storage Exploratory Committee (WSEC)

Board Advisory Committees (Summary or Meeting Agenda):
12. Agricultural Water Advisory Committee (AWAC)
13. Environmental and Water Resources Committee (EWRC)
14. Santa Clara Valley Water Commission (Water Commission)
15. Youth Commission

Board Joint Committees (Summary or Meeting Agenda):
16. Joint Recycled Water Advisory Committee (JRWAC) (Sunnyvale)
17. Joint Recycled Water Advisory Committee (JRWAC) (East PA/PA/MV)
18. Joint Recycled Water Policy Advisory Committee (JRWPAC) (SJ/SC/TPAC)
19. Joint Water Resources Committee (JWRC) (Gilroy/Morgan Hill)
20. San Felipe Division Reach One

External Committees/Agencies (Verbal Reports):
21. ACWA and ACWA Joint Powers Insurance Authority
22. Joint Venture Silicon Valley Board of Directors
23. Landscape Committee
24. Local Agency Formation Commission (LAFCO)
25. Northern California Latino Water Coalition
26. Pajaro River Watershed Flood Protection Authority
27. Redevelopment Dissolution Countywide Oversight Board of Santa Clara County
28. Safe, Clean Water Independent Monitoring Committee (IMC)
29. San Francisquito Creek JPA
30. Santa Clara County Water Retailers
31. Santa Clara Valley Habitat Conservation Plan JPA
32. San Luis and Delta-Mendota Water Authority Board
33. Santa Clara County Emergency Operations Area Council
34. Santa Clara County Recycling and Waste Reduction Commission

35. Santa Clara County Special Districts Association
36. South County Regional Wastewater Authority (SCRWA)
37. Zone 7, EBRPD, ACWD, SCVWD, LARPD and Tri-Valley Conservancy Liaison Committee

Attachments: *Handout 4.6.3-A: 121620 BAC Summary
*Handout 4.6.3-B: 011321 BAC Summary
*Handout 4.6.4-A: 010721 BPPC Summary
*Handout 4.6.4-B: 012521 BPPC Agenda
*Handout 4.6.7-A: 011421 SPOC Summary
*Handout 4.6.14-A: 012721 Water Commission Agenda
*Handout 4.6.28-A: 012721 IMC Agenda

*4.7. Proposed Future Board Member Agenda Items. (PREVIOUSLY LISTED AS ITEM 4.5)

5. WATER UTILITY ENTERPRISE:

5.1. Consider Decommissioning of the Anderson Hydroelectric Facility. 20-0918

Recommendation:

A. Receive the cost-benefit analysis for the Anderson Hydroelectric Facility (Facility);
B. Concur with staff's determination, based on results from the cost-benefit analysis, that it would be justified for Valley Water to pursue the surrender and decommissioning of the Facility; and
C. Direct staff to take the necessary steps to seek approval from the Federal Energy Regulatory Commission (FERC) to surrender and decommission the Facility, including, but not limited to:
    i. Evaluate the surrender of the license exemption and decommissioning of the Facility in the Anderson Dam Seismic Retrofit Project (ADSRP) Environmental Impact Report (EIR); and
    ii. Coordinate with FERC and other regulatory agencies to submit all applications and obtain any necessary approvals to implement decommissioning of the Facility as part of the ADSRP.

Manager: Greg Williams, 408-630-2867
Est. Staff Time: 10 Minutes

6. WATERSHEDS:

6.1. Approve Amendment No. 1 to Agreement No. A4263A, with Kleinfelder, Inc., for On-Call Geotechnical Engineering Services, CAS File No. 4913, Increasing the Fee by $750,000, for a Total Revised Fee of $1,750,000; and Amendment No. 1 to Agreement No. A4264A, with Cal Engineering & Geology, Inc., for On-Call Geotechnical Engineering Services, CAS File No. 4940, Increasing the Fee by $750,000, for a Total Revised Fee of $1,750,000. 20-1202

Recommendation:

A. Approve Amendment No. 1 to Agreement No. A4263A with Kleinfelder, Inc. for On-Call Geotechnical Engineering services, to increase the not-to-exceed fee by $750,000, resulting in a total not-to-exceed fee of $1,750,000; and
B. Approve Amendment No. 1 to Agreement No. A4264A with Cal Engineering & Geology, Inc. for On-Call Geotechnical Engineering services, to increase the not-to-exceed fee by $750,000, resulting in a total not-to-exceed fee of $1,750,000.

Manager: Rechelle Blank, 408-630-2615

Attachments: Attachment 1: A4263A Amendment No. 1
Attachment 2: A4264A Amendment No. 1

Est. Staff Time: 5 Minutes

*6.2. Authorize the Chief Executive Officer to Execute the Master Agreement With the City of Milpitas for the Removal and Construction of City Improvements, Modifications to City Facilities, and Work Within City's Right of Way Included in the Lower Berryessa Creek Flood Protection, Lower Calera Creek Flood Protection, and Lower Penitencia Creek Improvements Projects (Project Nos. 40174005 and 40334005) for a Fee of $1,665,505 (Milpitas) (District 3). 21-0121

Recommendation: Authorize the Chief Executive Officer to Execute the Master Agreement With the City of Milpitas for the Removal and Construction of City Improvements, Modifications to City Facilities, and Work Within City's Right of Way Included in the Lower Berryessa Creek Flood Protection, Lower Calera Creek Flood Protection, and Lower Penitencia Creek Improvements Projects for a Fee of $1,665,505 (Milpitas) (District 3).

Manager: Rechelle Blank, 408-630-2615

Attachments: Attachment 1: Agreement
*Supplemental Agenda Memorandum
*Supplemental Attachment 1: Agreement

7. ASSISTANT CHIEF EXECUTIVE OFFICER:

8. EXTERNAL AFFAIRS:

9. CHIEF EXECUTIVE OFFICER:

*9.1. Valley Water Comprehensive Annual Financial Report for the Fiscal Year Ended June 30, 2020, *and other Independent Auditor's Reports. 21-0072

Recommendation: Accept the Comprehensive Annual Financial Report for the Fiscal Year Ended June 30, 2020, *and other Independent Auditor's Reports.

Manager: Darin Taylor, 408-630-3068

Attachments:
*Original Agenda Memorandum
*Supplemental Agenda Memorandum
*Supplemental Attachment 1: FY 2019-20 CAFR
*Supplemental Attachment 2: Memorandum of Internal Controls
*Supplemental Attachment 3: Investment Policy Compliance
*Supplemental Attachment 4: Article XIII-B Appropriations Proced
*Supplemental Attachment 5: Travel and Subsistence Policy Com

Est. Staff Time: 5 Minutes

9.2. CEO and Chiefs' Report. 21-0065

Attachments:
Handout 9.2-A: Stream Maintenance Report
*Handout 9.2-B: Government Relations Legislative Update
*Handout 9.2-A1: Jeffrey Hare

10. ADMINISTRATION:

11. DISTRICT COUNSEL:

12. ADJOURN:

12.1. Board Member Reports/Announcements.

12.2. Clerk Review and Clarification of Board Requests.

12.3. Adjourn to Special Meeting at 10:00 a.m., on Wednesday, January 27, 2021, to be called to order in compliance with the State Emergency Services Act, the Governor's Emergency Declaration related to COVID-19, and the Governor's Executive Order N-29-20.

THIS PAGE INTENTIONALLY LEFT BLANK

Santa Clara Valley Water District

File No.: 20-0896

Agenda Date: 1/26/2021
Item No.: 2.1.

BOARD AGENDA MEMORANDUM

SUBJECT:
Santa Clara Valley Water District Government Relations Program Update and Legislative Outlook.

RECOMMENDATION:
A. Receive information on the 2020 Santa Clara Valley Water District (Valley Water) government relations advocacy and stakeholder engagement program;
B. Receive update from federal and state consultants on 2020 accomplishments and 2021 legislative outlook; and
C. Provide input on current and future challenges, goals, and accomplishments since the last presentation to the Board of Directors.

SUMMARY:
On an annual basis, staff has presented the Board with updates on Valley Water's government relations advocacy and stakeholder engagement program. The last update was presented on January 28, 2020.

BACKGROUND
The Office of Government Relations advocates at the local, regional, state, and federal levels to promote the water supply, flood protection, revenue enhancement, and environmental stewardship interests of Valley Water and the residents of Santa Clara County, in alignment with the Board's legislative priorities. Consequently, Valley Water's government relations program cultivates strategic relationships with a variety of policymaking bodies and advocacy stakeholders, including elected officials, regulatory agencies, administrative agencies, and key advocacy groups. In addition, every October the Board reviews and adopts legislative policy proposals and legislative guiding principles that form the foundation for Valley Water's advocacy efforts. The 2021 Legislative Guiding Principles and Policy Proposals adopted by the Board in October 2020 are included as Attachment 1.

FEDERAL ADVOCACY AND STAKEHOLDER EFFORTS
The federal government operates on a long-term horizon, with bills introduced in one two-year congressional session and, if not enacted into law, requiring reintroduction in future sessions. Efforts at the federal level involve direct engagement and ongoing communication with Congress and executive agencies on legislative and regulatory matters affecting Valley Water's projects and priorities. In addition to staff's advocacy efforts, we also use Washington, D.C.-based consultants who have extensive experience and established relationships with policymakers and administration

officials.

Federal Advocacy and Engagement
Staff meets with Valley Water's congressional delegation in their local offices at least twice yearly and regularly communicates with their staff in Washington, D.C., to keep them informed of various projects and priorities. Staff also creates opportunities for the Board to dialogue directly with Members of Congress and other key federal officials on important policy issues, legislation, and regulatory concerns. In 2020, due to the COVID-19 pandemic, these meetings were moved to a virtual setting as all in-person gatherings were canceled.

Washington, D.C. Advocacy Trips
Twice yearly, Valley Water Board Members lead a delegation on advocacy trips to Washington, D.C., to advance the Board's and Valley Water's federal projects and priorities. In 2020, due to the COVID-19 pandemic, the Board led two virtual advocacy trips to replace the in-person Washington meetings. In March 2020, Chair Nai Hsueh led the delegation in its first-ever virtual advocacy trip, where the group met with dozens of agency officials, Members of Congress, and key congressional committee staff. In November 2020, all seven Board members participated in another successful virtual trip. Over the three days of each trip, the delegation met with Members of Congress and officials from the U.S. Army Corps of Engineers, the Office of the Assistant Secretary of the Army (Civil Works), the U.S. Bureau of Reclamation, the White House Office of Management and Budget, and the Natural Resources Conservation Service, among others. Despite the new format, including producing and sharing all materials electronically, the 2020 trips were a success.

Key Federal Legislation
In 2020, staff brought 20 federal bills to the Board for positions, listed in Attachment 2. With Board-approved authority, staff then actively educated our congressional delegation and advocated for the Board's position on each bill, addressing water infrastructure funding, COVID-19 stimulus funding, water recycling, water quality, wetlands protection, environmental justice, and regulatory streamlining, among other topics.

Federal Successes
2020 was a difficult year in which to advance federal legislation and policy priorities due to COVID-19 and a contentious presidential election, which together worked to limit the federal government's effectiveness in moving initiatives forward. These challenges compounded the timeline of the normal federal legislative and budgetary process, which is already longer than the state or local timelines. Despite this, Valley Water had the following key successes in 2020:

1. **Funds for Reevaluation of the Upper Guadalupe River Flood Protection Project**
Worked with Congresswoman Zoe Lofgren and others in the delegation to advocate for and secure $1.5 million in Fiscal Year (FY) 2020 funding for the U.S. Army Corps of Engineers (USACE) to conduct a General Reevaluation Report (GRR) for the Upper Guadalupe River Flood Protection Project - the first time in six years that the project has received federal funding. The GRR will help USACE to determine a path forward for the project.

2. **Funds for Feasibility Study of Shoreline Phase II**

Worked with Congresswoman Zoe Lofgren and others in the delegation to secure at least $400,000 in USACE FY 2021 funding to help complete the feasibility study for Phase II of the South San Francisco Bay Shoreline Project (Economic Impact Areas 1-4). At press time, USACE has not released its FY 2021 work plan since Congress only passed the FY 2021 appropriations bill in late December. The FY 2021 President's Budget included $400,000 for the Phase II feasibility study, but USACE requested - and we advocated for - an additional $600,000 to complete the feasibility study.

3. Funds for Feasibility Study of Pacheco as San Luis Low Point Solution

Worked with Congressman Jimmy Panetta and others in the delegation to advocate for and secure planning funds for the Pacheco Reservoir Expansion Project in FY 2020. As a result, the U.S. Bureau of Reclamation recommended $1.7 million in FY 2020 to complete the feasibility study for the San Luis Low Point Improvement Project, for which the Pacheco Reservoir Expansion may be the National Economic Development Plan.

4. Advocated for Upper Llagas Creek Flood Protection Project

Worked closely with the Natural Resources Conservation Service (NRCS) staff in Davis, California, to advocate for federal funding for the Upper Llagas Creek Flood Protection Project. Supported by successful virtual visits with NRCS officials in Washington, D.C., the local advocacy has positioned us well for potential receipt of grant funding in 2021.

5. Valley Water Priorities in Water Resources Development Act

Worked with House and Senate Members and staff to advocate for and secure passage of a Water Resources Development Act that advances Valley Water priorities. The final bill included language that urges USACE to pursue multi-purpose projects, which could benefit the Upper Penitencia Creek Project, and language that makes dams like Anderson Dam eligible for federal high hazard dam rehabilitation funding.

STATE ADVOCACY AND STAKEHOLDER EFFORTS

Our work in Sacramento involves protecting Valley Water's interests and advocating on state legislative, regulatory, and budgetary items. Staff routinely meets with members of the Legislature, the Office of the Governor, and key agencies on legislative and regulatory issues. Staff also utilizes a consultant with an extensive network of established relationships with policymakers to assist in the advancement of Valley Water's interests at the State Capitol. Staff reviews over 3,600 bills and numerous regulatory proposals for impacts on Valley Water; consults with Valley Water staff regarding significant policy issues; brings legislation before the Board for consideration of positions; and educates officials about Valley Water positions and concerns, engaging them for advocacy in support of Valley Water interests.

State Advocacy and Engagement

Once the Board approves a legislative position, staff advocates for Valley Water's position with the members and staff of the Legislature, the Office of the Governor, regulatory agencies, and other stakeholders. Staff also monitors and engages on regulatory issues as needed to advance Valley Water's interests.

In 2020 there were several regulatory issues of critical importance to Valley Water, including the federal Clean Water Act Section 303(d) listing of Los Gatos Creek for temperature impairment, engagement with the California Water Commission regarding Proposition 1 Water Bond funding for the Pacheco Dam Expansion Project, and the Department of Water Resources on Subventions funding for the South San Francisco Bay Shoreline Project (Shoreline Project). In all of these proceedings, Government Relations staff coordinated internal staff review, consolidated comments into a coherent message, sought the final approval from senior management, and formally submitted the comments. When warranted, staff facilitated meetings and public presentation of Valley Water's positions, sometimes testifying in public hearings.

Sacramento Legislative Days at the Capitol
Amid the COVID-19 pandemic, the Office of Government Relations coordinated the annual series of State Legislative Days for Valley Water Board Members on May 19-22, consisting of 15 video webinar meetings. Vice Chair Estremera, Director Santos, and Director LeZotte led senior staff in a series of meetings with state legislators, their staffs, and Newsom Administration officials on several priority issues, including the Anderson Dam Seismic Retrofit Project permitting, AB 3005 (R. Rivas), and potential state economic stimulus funding for dam safety, recycled water, drinking water, and flood control.

Key State Legislation
In 2020, staff brought 20 state bills, resolutions, budget items, bond measures, or statewide ballot measures to the Board for positions, listed in Attachment 2. Staff then advocated for the Board-approved positions with the Legislature. Due to the pandemic, the Legislature's capacity to hear and pass bills was greatly limited. Of those 20 items with Board-approved positions, many were support positions on bills that were deemed not urgent enough under the pandemic induced limitations, and only five resulted in the Board's desired outcome.

State Successes
In 2020, Valley Water's state level successes were:

1. **State Flood Control Subventions Funding for the Shoreline Project Advances**
   In July, after two years of working with the Department of Water Resources (DWR), the agency submitted a required report to the Legislature indicating the South San Francisco Bay Shoreline Project successfully completed the regulatory process for State Subventions approval. Staff is now working with DWR to finalize a funding agreement, after which Valley Water will begin submitting receipts for reimbursement.

2. **SB 98 Excess Educational Revenue Augmentation Fund (ERAF) Calculation**
   A key function of the Office of Government Relations is to prevent or reduce negative impacts on Valley Water from legislation or regulation. SB 98, a state budget trailer bill, was originally proposed to retroactively change the calculation method for excess Educational Revenue Augmentation Fund (ERAF) distributions to counties, cities, and special districts. The change may cost Valley Water up to $2 million annually. Staff worked hard to oppose the ERAF provisions, organizing testimony in opposition, spearheading a coalition letter of opposition from special districts, and distributing floor alerts urging members to remove the most

objectionable provisions. The efforts resulted in the removal of penalties for counties, a shift in decision making from the Department of Finance to the State Controller, and retroactivity going back only one year instead of two, saving Valley Water up to $2 million that would have been clawed back by the state.

3. **State Water Resources Control Board: Federal Clean Water Act Section 303(d) Listing of Los Gatos Creek**
   Staff was able to secure language to incorporate Valley Water's requested compromise, consisting of the adoption of "special findings" as a part of the State Water Board's federal Clean Water Act Section 303(d) listing of Los Gatos Creek for temperature impairment. The special findings allow the Regional Water Quality Control Board to immediately and directly reassess Pacific Northwest temperature thresholds and related listings based on the findings of a proposed Valley Water Temperature Study. The inclusion of the "special findings" in the State Water Board resolution allows for a future change in the Los Gatos Creek listing based on more appropriate science that is reflective of the Bay Area's Mediterranean climate.

AB 3005 Anderson Dam Bill
Valley Water secured legislative passage of our sponsored bill, AB 3005 (R. Rivas) Expedited Dam Safety for Silicon Valley Act, by near unanimous votes in both houses of the Legislature. Unfortunately, the bill was ultimately vetoed by the Governor. AB 3005 would have authorized the Anderson Dam Seismic Retrofit Project for "best value" selection of the construction contractor, expedited environmental permitting by state agencies, required expedited judicial review of challenges to project environmental impact reports, and required net-zero greenhouse gas emissions for the project as well as actions to enhance fish habitat. Getting the bill passed through the Legislature was made more difficult by the COVID-19 pandemic and required extensive negotiations with multiple state agencies, legislative committees, and key stakeholders. The veto was a surprise both to the Legislature and staff given that state dam safety and environmental permitting agencies were recommending the Governor's signature on the bill.

LOCAL/REGIONAL ADVOCACY AND ENGAGEMENT
Similar to the work at the federal and state levels, Valley Water's local and regional government relations programs involve direct engagement and communication with elected and appointed officials in all 15 cities of Santa Clara County, the County Board of Supervisors, both open space agencies, and the San Francisco Bay Restoration Authority. The local and regional government relations staff also proactively engages with the field staff for the 11 members of the state legislative delegation, as well as with key advocacy stakeholders including business, civic, environmental, and diversity organizations. Due to the COVID-19 pandemic, most community engagement events that Valley Water traditionally attends and supports were somewhat limited. As these events moved to a virtual setting, staff quickly adjusted to ensure Valley Water's continued presence.

2020 Local and Regional Successes
In 2020, Valley Water had many local and regional successes that advanced Valley Water's interests and Board priorities. A full list of tours, events, and sponsorships is included in Attachment 3. Highlights include:

1. **Safe, Clean Water Renewal**

Helped develop the Safe, Clean Water measure, including providing factual, nonpartisan information that contributed to public understanding of measure, which was successfully passed by the voters in November. The Office of Government Relations efforts also included hosting a Blue Ribbon Forum to solicit input on the renewal from 40 community stakeholders, distributing 1350 community input surveys, and briefing local elected officials and their staffs on the measure.

2. **AB 3005 Advocacy**

Staff conducted a substantial and sustained advocacy campaign to build grassroots support for AB 3005 from a wide variety of key stakeholder groups and community leaders. Staff further built a robust coalition comprised of environmental, labor, business, and diversity groups, as well as several different cities and towns within Santa Clara County for future advocacy efforts.

3. **Conducted Advocacy Tours**

Advanced Valley Water projects and priorities with elected officials, regulatory agency representatives, and advocacy stakeholders by conducting and organizing two advocacy tours of key water supply, flood protection, and environmental restoration projects. A central highlight was the first-ever Virtual VIP Water Walk Tour in October of several priority project sites for more than 50 elected officials and staff, as well as key advocacy stakeholders.

4. **Participated in Community Events**

Educated, engaged, and bolstered support for Valley Water priorities with communities across Santa Clara County by participating in 42 community events, where Valley Water highlighted water conservation, purified recycled water, and community-specific projects. Additionally, several organizations transitioned to online experiences that allowed Valley Water the opportunity to participate in first-ever virtual events.

5. **Sponsored Community Events with Valley Water Nexus**

Supported Valley Water's and the Board's presence at a variety of civic, business, diversity and inclusion, and professional events by sponsoring 44 community events that had a nexus to and advanced Valley Water's mission, vision, and goals.

2021 Legislative Outlook

The new year will bring changes in Washington, D.C., perhaps increasing the efficacy of the federal government by avoiding a partisan split between the legislative and executive branches. Former Vice President Joseph R. Biden Jr. will be inaugurated the 46th President of the United States on January 20, 2021, and current U.S. Senator Kamala Harris will be sworn in as Vice President. In Congress, the U.S. House of Representatives will remain in Democratic control under Speaker Nancy Pelosi. Due to victories in two runoff races in Georgia, Democrats will assume the de facto majority in the U.S. Senate, as the split will be 50-50 with Vice President-Elect Harris serving as the tiebreaking vote.

Despite the very slim Democratic majority in both houses of Congress, there is some promise for

enacting bold legislation in 2021. In particular, there is a desire among congressional leadership on both sides of the aisle to pass a comprehensive infrastructure package, and President-elect Biden has already signaled a desire to enact such a bill. Other priorities are likely to include another COVID -19 stimulus package and expanding access to health care. Congress will also undergo budget reconciliation, which allows for simple majority passage of certain bills and presents another opportunity to pass related initiatives. Given the still highly partisan political environment, however, finding strategic opportunities to move bills - particularly those with bipartisan consensus - will be critical. Valley Water's federal advocacy efforts will continue to be robust and aggressive, building upon our 2020 accomplishments to achieve even greater success in 2021 and beyond.

The outlook for progress at the state level is promising. With Gavin Newsom as Governor and a Democratic supermajority in both the Senate and Assembly, staff is looking forward to a productive year. Valley Water's state advocacy efforts, as well as our local/regional engagement activities, also will continue to be vigorous and build upon our 2020 successes so that the Board's priorities and Valley Water's interests are protected and advanced at all levels.

2021 Legislative Proposals, Policies, and Priorities
Guided by the Board of Directors' adopted 2021 Legislative Policy Proposals and Guiding Principles, and contingent upon an approved budget for FY 2022, staff is planning a new legislative policy proposal in 2021 (see the full list of Board-approved policies and proposals in Attachment 1):
Sponsor state legislation to secure best value contracting for the Anderson Dam Seismic Retrofit Project.

FINANCIAL IMPACT:
There is no financial impact associated with this item.

CEQA:
The recommended action does not constitute a project under CEQA because it does not have the potential for resulting in direct or reasonably foreseeable indirect physical change in the environment.

ATTACHMENTS:
Attachment 1: 2021 Legislative Guiding Principles/Policy Proposals
Attachment 2: Key Legislation
Attachment 3: Community Events and Sponsorships
Handout 2.1-A: PowerPoint

UNCLASSIFIED MANAGER:
Don Rocha, 408-630-2338

THIS PAGE INTENTIONALLY LEFT BLANK

Valley Water

2021
Legislative Guiding Principles

Serving 2 million people living and working in Silicon Valley, Valley Water is the primary water resources agency for Santa Clara County, California.

Valley Water acts not only as the county's water wholesaler, but also as its flood protection agency and the steward for its watersheds, streams and creeks, underground aquifers and Valley Water-built reservoirs. As the county's water wholesaler, Valley Water makes sure there is enough clean, safe water for the county's residents. As the agency responsible for local flood protection, Valley Water works diligently to protect Santa Clara Valley homes, schools, roadways, and businesses from the devastating effects of flooding. Our watershed and stream stewardship responsibilities include protection and restoration of habitats, and protection of endangered species in connection with carrying out the purposes of the District Act.

To support our efforts in managing critical water issues, Valley Water advocates for legislation that advances our key guiding principles:

I. Ensure a reliable supply of healthy, clean drinking water.

II. Reduce the potential for flood damages.

III. Enhance the quality of life through the protection and enhancement of watersheds, streams, and natural resources.

IV. Protect revenues, enhance revenues, and contain costs.

V. Encourage opportunities for job creation, and the protection and stability of Valley Water's workforce.

2021 Legislative Guiding Principles

I. Ensure a reliable supply of healthy, clean drinking water.

A. Water Supply and Drought

1. Support legislative, administrative, or other efforts that protect/advance Valley Water's interests in California's Modernization of the Delta Conveyance, including efforts to ensure financially prudent project delivery.

2. Support legislative actions that provide for drought relief funding and policies.

3. Support efforts that encourage the use of recycled water for indirect and direct potable use.

4. Support measures that increase or sustain the reliability or quality of Valley Water's imported water supplies.

5. Support increasing water use efficiency throughout the state, while taking into account previous water use efficiency investments.

6. Support strengthening local agencies' ability to manage and protect groundwater supplies.

7. Support the role of technology in addressing water conservation efforts and encourage government funding for technological advancements.

8. Support tax-exempt status for water conservation rebates.

9. Support legislative efforts that provide public water agencies with first right of refusal to accept wastewater.

10. Support legislation and policies that prioritize municipal and industrial water supplies during shortages.

11. Support enactment of county or city ordinances that would promote compliance with SB 407 by requiring the replacement of non-water-conserving plumbing fixtures upon the transfer or real property, or other enforcement mechanisms.

B. Water Quality

1. Support efforts to place a moratorium on fracking and all related legislative bills.

2. Support efforts to aggressively protect water quality from contamination in watersheds and groundwater basins.

3. Support efforts to amend the Clean Water Act consistent with our mission.

4. Support efforts to address all Delta stressors, including toxics, invasive species and in-Delta and upstream diversions.

5. Oppose weakening the State Water Resource Control Board's anti-degradation policy.

6. Support legislative efforts and regional initiatives that would provide research funding into understanding and addressing issues around Constituents of Emerging Concern (CECs) in the water supply.

7. Support funding for the characterization, monitoring, and treatment of per- and polyfluoroalkyl substances (PFAS). Where a source of contamination can easily be identified, support the "polluter pays" principle.

C. Funding for Water Infrastructure

1. Support funding and partnerships to ensure sustainable long-term water supplies, including recycled water and groundwater storage projects.

2. Supply funding for boating inspections and other measures to prevent the spread of invasive mussels

3. Support protection funding for planning and environmental review of new Delta conveyance facilities.

4. Support protection of funding for improving the integrity of Delta levee systems that impact salinity intrusion.

5. Support assessing the state of the nation's dams and providing grants or infrastructure loans for dam retrofit.

6. Support legislation that allows a borrower to pay the credit subsidy on a Water Infrastructure Finance and Innovation Act (WIFIA) loan.

7. Support legislation, bond measures, or appropriations that fund or could fund efforts in Valley Water's interests, including infrastructure projects.

8. Support the financing of recycled water facilities by amending the federal tax code to permit the issuance of tax-exempt governmental bonds by a public agency, or on behalf of a public agency-approved public-private partnership (P3), that may design, build, own, operate, and or finance the facilities.

D. General Water Policy and Reliability

1. Support timely permitting of water supply capital and operations and maintenance projects.

2. Support legislative efforts that improve integration of water agencies in land use decision-making processes.

3. Support efforts to streamline the permitting of water recycling projects, taking into account the need to protect high quality groundwater basins.

4. Support legislation that provides for the reliability of operations of state and federal water projects.

5. Support regulatory and legislative proposals that reduce impediments for public agencies seeking to use effluent water for recycling purposes.

6. Support and promote the concept of beneficiary pays.

7. Support changes to the definition of disadvantaged community so that affordability factors are considered to address specific communities.

8. Support legislative efforts that amend Proposition 218 and Proposition 26 to allow low-income rate assistance.

II. Reduce the potential for flood damages.

A. Flood Protection Funding

1. Support funding for infrastructure, construction, and repair of flood protection systems.

2. Support funding for the Federal Emergency Management Agency (FEMA) to update tidal and fluvial flood risk maps.

3. Support funding for the implementation of a statewide flood protection needs assessment.

4. Support equitable funding and staffing for the State Flood Control Subventions Program.

5. Support reimbursement of local funds used for the Upper Llagas Creek Flood Protection Project.

6. Support authorization for Valley Water projects at the federal level, including federal authorization for the South San Francisco Bay Shoreline, San Francisquito Creek and Upper Llagas Creek Projects.

7. Support funding for research of Atmospheric Rivers and for new technologies that provide improved information for weather forecasts, streamflows, reservoir operations, and flooding.

B. Flood Protection and Regulatory Efforts

1. Support timely and more appropriate permitting of capital and operations and maintenance projects.

2. Ensure participation in the Community Rating System Recertification process through FEMA's National Flood Insurance Program.

3. Support efforts to continue the National Flood Insurance Program with a balanced approach to program reform.

4. Support efforts to modify the U.S. Army Corps of Engineers' levee policy regarding vegetation near levees.

III. Enhance the quality of life through the protection and enhancement of watersheds, streams and natural resources

A. Waterway and Ecosystem Protection

1. Support legislative efforts to eliminate or reduce waste entering waterways (e.g., plastic bags, expanded polystyrene, etc.).

2. Support legislation and funding that facilitates the cleanup of unlawful encampments and reduces or prevents homelessness.

3. Support legislation that protects the environment through conservation and the preservation of natural resources, habitat, and improving the health of local watersheds.

4. Support legislative efforts to address abandonment or derelict operation of vessels in navigable waterways and reservoirs.

5. Support legislation and policies that address mercury contamination in local waterways.

6. Support ecosystem restoration in the Delta.

B. Regulatory Efforts

1. Support CEQA reform to accelerate projects.

2. Promote a regulatory environment that allows and encourages special districts and municipalities to achieve local, state and national water conservation and environmental goals.

3. Support adequate funding for regulatory agencies to ensure proper levels of service and reduce the cost of inflation due to regulatory delay.

4. Support changing certification requirements for water treatment operators who work at recycled water facilities.

5. Support legislative efforts that allow an applicant to conduct environmental review only under CEQA when both federal and state approval is required for public projects in California.

6. Support efforts to reduce the impacts of including "the banks" in the definition of "Waters of the State."

C. Resource Protection Funding

1. Support funding to address climate change impacts on water supply and flood management facilities and infrastructure needs.

2. Support the use of alternative funding instruments to fund maintenance of mitigation sites.

IV. Protect revenues, enhance revenues, and contain costs.

1. Support state and federal funding for key infrastructure efforts, including funding for local projects and a Bay-Delta solution.

2. Support innovative funding proposals that leverage government dollars.

3. Oppose the involuntary realignment of services and revenue.

4. Remove barriers to local agencies' ability to issue tax-exempt bonds and Certificates and Participation.

5. Protect local government revenues by maintaining local authority over the collection of fees and generation of revenues.

6. Oppose efforts to reallocate property taxes among state and local agencies.

7. Support the California Water Commission engaging Congress and the federal government in supporting the completion of projects in Santa Clara County.

8. Support reducing the voting requirement for special taxes.

9. Oppose the imposition of unfunded mandates.

10. Clarify groundwater charges and language.

11. Support exemptions for stormwater and flood protection fees.

12. Support the creation of a $100,000 threshold when requiring a competitive selection process for the contracting of professional services.

13. Support utilization of drone technology for inspections of Valley Water systems and facilities.

14. Support flexibility in public works construction contracting.

15. Support funding for Valley Water projects and operations during declared local, state, or national emergencies.

16. Support changes to federal law that would allow Valley Water to pay out the entirety of an employee's accrued vacation.

V. Encourage opportunities for job creation, and the protection and stability of Valley Water's workforce.

1. Support transparency and accountability for local government.

2. Oppose legislation that reduces the authority and or ability of local government to determine how best and most effectively to operate local programs and provide services.

3. Support workforce training, job creation, research and development efforts.

4. Support legislative efforts that curb and or control the escalating cost of employer-provided benefits.

5. Promote policies that provide a more sustainable and cost-effective delivery of workers' compensation benefits for injured Valley Water employees.

6. Oppose legislation that interferes with the employer/employee relationship or places employees at risk while performing their duties.

7. Support efforts to develop and implement statewide integrated public safety communication systems.

8. Support creation of a single department to oversee and coordinate emergency preparedness, response, recovery and homeland security activities.

9. Remove barriers to attracting, recruiting and retaining a diverse workforce that reflects the community that Valley Water serves.

10. Support legislation, regulations, and policy initiatives that promote a well-trained and fairly compensated workforce.

CONTACT US

For more information, contact us at **(408) 630-2600** or visit our website at ***valleywater.org.***

FOLLOW US

scvwd

valleywater

valleywater

Join our mailing list: ***https://delivr.com/2uz9z***

Regulatory Issues

Seek Permit and Fee Exemptions from Local Jurisdictions to Remove Hazardous Trees from Valley Water Property

Summary of Legislative and Regulatory Needs

Ten local jurisdictions currently require Valley Water to obtain permits and pay fees to remove hazardous trees on Valley Water property. Five jurisdictions, including the County and the City of San José exempt Valley Water from the requirement. Because Valley Water complies with California Environmental Quality Act (CEQA); provides mitigation, as necessary; and notifies neighbors of the tree removal, complying with local permitting requirements is redundant and adds time and costs to the removal of trees declared a hazard.

Valley Water's Approach to Address Legislative and Regulatory Needs

Pursue exemptions from the remaining jurisdictions.

Support Expert Construction of Capital Projects

Authorize Best Value Contracting for the Anderson Dam Seismic Retrofit Project

Summary of Legislative Needs

The Federal Energy Regulatory Commission's independent Board of Consultants recommends "best value" procurement for the Anderson Dam project due to its complex design, delivery, and installation. The expert construction of the Anderson Dam Seismic Retrofit Project will reduce the risks to public safety and the California economy stemming from the flood protection and seismic deficiencies of the existing dam.

Valley Water's Approach to Address Legislative Needs

Seek introduction and passage of a state bill providing authorization to use "best value" procurement, based on the public safety and economic risks of having a seismically restricted dam located above one of the state's most populous and economically significant regions.

Regulatory Issues

Extended Delays in Issuing Permits: Agencies Have Not Been Able to Issue Permits in a Timely Fashion due to Understaffing and Other Staffing Issues

Summary of Administrative Needs

Regulatory agencies appear to lack adequate staff to process permits in a timely and predictable manner. Engaging staff from agencies early in a project is increasingly difficult due to the lack of staff resources. Streamlining of state and federal permits is essential to getting local agency projects out in a timely and cost-effective manner.

Valley Water's Approach to Address Administrative Needs

Request and support adequate funding for regulatory agencies and collaborate with regulatory agencies at all levels to address issues and improve the overall permit process leading to public infrastructure projects not being delayed. Where feasible, support standardizing regulatory agency internal processes and procedures to optimize the permitting application process.

Better Coordination of Mitigation Requirements Among Regulatory Agencies is Needed

Summary of Administrative Needs

Complying with multiple and often conflicting mitigation requirements of state and federal agencies has become increasingly common, often driving up the price tag on projects and delaying projects which often are responsible for the protection of the health and safety of the community. It has become increasingly difficult to comply with conflicting regulations that govern day-to-day operations and the building of infrastructure projects.

Federal compensatory mitigation for impacts to wetlands and Waters of the United States should comply with the hierarchy established by the Mitigation Rule (Compensatory Mitigation for Losses of Aquatic Resources; Final Rule [33 CFR parts 325 and 332] and Final 2015 Regional Compensatory Mitigation and Monitoring Guidelines for the U.S. Army Corps of Engineers South Pacific Division) which stipulates in descending order of preference 1) mitigation banks, 2) in-lieu fee programs, and 3) permittee-responsible mitigation in consideration of a watershed approach.

The best mitigation option for Valley Water may be the establishment of an in-lieu fee program. However, state and federal agencies have not been supportive of in-lieu fee programs despite their priority level in the Federal Mitigation Rule and their strong recommendation that in-lieu fee is an effective and useful approach to satisfy compensatory mitigation requirements.

Valley Water's Approach to Address Administrative Needs

A forum or process should be created which allows for agencies to understand the requirements being placed on permittees, which will decrease the conflicts which are often present. Federal and state agencies should agree to and accept the same mitigation for the same project impacts to reduce the financial burden on Valley Water. This will allow for more efficient permitting and responsible spending of public funds. In-lieu fee programs should be an allowable mitigation option for Valley Water.

Create a Balanced Approach to Watershed-Based Regulatory Permitting and Financing for Public Agencies

Summary of Legislative, Regulatory, and Administrative Needs

Valley Water wants to ensure that it can work effectively and efficiently with regulatory agencies to ensure that permits are obtained in a timely and predictable manner and that our financial resources are appropriately utilized.

To that end, in situations where it can be determined that routine maintenance would not cause additional environmental impacts than which were originally mitigated for, there should not be a need for permitting the maintenance. Removing this permitting requirement would both simplify the process and expedite the overall timeline for conducting routine maintenance.

Furthermore, environmental restoration projects, by their very nature, are intended to protect, restore, and enhance the environment, and should be exempt from mitigation.

Valley Water's Approach to Address Legislative, Regulatory, and Administrative Needs

Seek legislative, regulatory, and administrative paths in conjunction with interested stakeholder groups to: 1) pursue efforts that will allow for public agencies, which are performing routine maintenance, to bring flood protection projects back to their original capacity to be exempt from needing to obtain a permit, as long as the maintenance would not cause any additional environment impacts which were not originally mitigated; 2) pursue efforts that will allow for true environmental restoration projects to be exempt from requiring mitigation, and 3) pursue efforts which will provide agencies alternatives and exemptions to endowments if the agency has adopted the local or regional watershed management plan.

Public Entities Need Flexibility in Financial Assurance Mechanisms for Long-Term Management of Compensatory Mitigation Sites

Summary of Legislative and Administrative Needs

Permitting agencies are requiring financial assurances for long-term management of compensatory mitigation sites as a condition of permit issuance. Federal and state agencies have recently been insistent that endowments are the only avenue to ensure the long-term sustainability of a compensatory mitigation site.

The U.S. Army Corps of Engineers (USACE), through its district engineer, determines the compensatory mitigation for a specific project. As part of this compensatory mitigation, the district engineer requires financial assurances for the completion of the mitigation project, as well as financing mechanisms for the long-term management of the mitigation property.

Financing of long-term sustainability of a mitigation project after its completed, PP 19649 Final Rule, Supplemental Information re 33 CFR 332.7 (USACE) and 40 CFR 230.97 Management (d) (U.S. Environmental Protection Agency) states "In cases where compensatory mitigation project sites are owned by public entities, it may not be necessary to include provisions for the financing of any required long-term management if, for example, a formal, documented commitment from a government agency is provided" (i.e., stewardship commitment). For public agencies identifying adequate financing at the time of permit issuance may be problematic since agency funding can vary from year-to-year with budget cycles, thus underscoring the need for a formal, documented commitment.

The State Government Codes 65966 (b) and 65967 (a) & (b) indicate there is flexibility in methods of funding for the long-term stewardship of mitigation property, and that an endowment is not the only option.

Valley Water's Approach to Address Legislative and Administrative Needs

Valley Water seeks to engage with applicable state and federal agency senior officials to ensure flexibility in long-term financial assurances is available to public entities including exemption from endowments, and to clarify changes in agency policy if necessary.

Water Supply

Streamline the Water Rights Change Petition Process for Valley Water Projects

Summary of Administrative Needs

According to the State Water Resources Control Board (State Water Board) Water Rights Petitions Program webpage, the water rights change petition process takes five to seven years to complete, and if there are significant protests filed, the process can take even longer. While these issues are complex, the time to obtain water rights permits could be reduced if the State Water Board allocated more staff to the Water Rights Petitions Program. The implementation of the Fish and Aquatic Habitat Collaborative Effort (FAHCE) settlement agreement and the Anderson Dam Seismic Retrofit Project both require the petitioning of the State Water Board to change existing water rights and could be delayed by a backlog of water rights change petitions.

Valley Water's Approach to Address Administrative Needs

Seek a contractual agreement with the State Water Board through which Valley Water would pay for additional State Water Board staff to work on Valley Water petitions, including the Anderson Dam Seismic Retrofit Project, FAHCE, and other projects as needed.

Recycled Water Indirect/Direct Potable Use Proposal

Summary of Legislative and Regulatory Needs

To ensure an adequate and reliable supply of high quality water, Valley Water has partnered with cities and water retailers in the county to develop recycled water supplies. Recycled water use is expected to expand in the coming years. In 2014, Valley Water completed the Silicon Valley Advanced Water Purification Center, an advanced water treatment facility that produces up to eight million gallons per day of highly purified recycled water that is blended into existing recycled water supplies, thereby improving overall recycled water quality so that the water can be used for a wider variety of irrigation and industrial purposes. Longer term, Valley Water is investigating using highly purified recycled water for replenishment of groundwater basins, similar to the successful groundwater replenishment system operated by the Orange County Water District, and potentially direct potable reuse.

Valley Water has been involved in the development of indirect potable reuse in Silicon Valley and in direct potable reuse research. In 2010 and 2013, the California State Legislature

mandated that the state Department of Public Health (now Division of Drinking Water), in consultation with the State Water Resources Control Board (State Water Board), report on the feasibility of developing uniform water recycling criteria for direct potable reuse by December 31, 2016. The State Water Board released its draft report in September 2016, which suggested that direct potable reuse is feasible but requires additional research. In 2017, AB 574 (Quirk) was signed into law requiring the State Water Board to establish a framework for regulating direct potable reuse by June 1, 2018, and established a deadline for the development of Raw Water Augmentation regulations of 2023. The framework was completed in 2019, and the studies identified as required to complete the Raw Water Augmentation regulations are currently underway.

Valley Water's Approach to Address Legislative and Regulatory Needs

Continue to facilitate the creation of coalitions and efforts to support adequately funding recycled and purified water, and other programs that will allow full integration of stormwater, groundwater recharge, flood water, gray water, and indirect and direct potable reuse. Continue to work with the state and other stakeholders to further the development of regulations for direct potable reuse.

Regulatory Issues

Extended Delays in Issuing Permits: Agencies Have Not Been Able to Issue Permits in a Timely Fashion Due to Understaffing and Other Staffing Issues

Summary of Administrative Needs

Regulatory agencies appear to lack adequate staff to process permits in a timely and predictable manner. Engaging staff from agencies early in a project is increasingly difficult due to the lack of staff resources. Streamlining of state and federal permits is essential to getting local agency projects out in a timely and cost-effective manner.

Valley Water's Approach to Address Administrative Needs

Request and support adequate funding for regulatory agencies and collaborate with regulatory agencies at all levels to address issues and improve the overall permit process leading to public infrastructure projects not being delayed. Where feasible, support standardizing regulatory agency internal processes and procedures to optimize the permitting application process.

Better Coordination of Mitigation Requirements Among Regulatory Agencies is Needed

Summary of Administrative Needs

Complying with multiple and often conflicting mitigation requirements of state and federal agencies has become increasingly common, often driving up the price tag on projects and delaying projects which often are responsible for the protection of the health and safety of the community. It has become increasingly difficult to comply with conflicting regulations that govern day-to-day operations and the building of infrastructure projects.

Federal compensatory mitigation for impacts to wetlands and Waters of the United States should comply with the hierarchy established by the Mitigation Rule (Compensatory Mitigation for Losses of Aquatic Resources; Final Rule [33 CFR parts 325 and 332] and Final 2015 Regional Compensatory Mitigation and Monitoring Guidelines for the U.S. Army Corps of Engineers South Pacific Division) which stipulates in descending order of preference 1) mitigation banks, 2) in-lieu fee programs, and 3) permittee-responsible mitigation in consideration of a watershed approach.

The best mitigation option for Valley Water may be the establishment of an in-lieu fee program. However, state and federal agencies have not been supportive of in-lieu fee programs despite their priority level in the Federal Mitigation Rule and their strong recommendation that in-lieu fee is an effective and useful approach to satisfy compensatory mitigation requirements.

Valley Water's Approach to Address Administrative Needs

A forum or process should be created which allows for agencies to understand the requirements being placed on permittees, which will decrease the conflicts which are often present. Federal and state agencies should agree to and accept the same mitigation for the same project impacts to reduce the financial burden on Valley Water. This will allow for more efficient permitting and responsible spending of public funds. In-lieu fee programs should be an allowable mitigation option for Valley Water.

Create a Balanced Approach to Watershed-Based Regulatory Permitting and Financing for Public Agencies

Summary of Legislative, Regulatory, and Administrative Needs

Valley Water wants to ensure that it can work effectively and efficiently with regulatory agencies to ensure that permits are obtained in a timely and predictable manner and that our financial resources are appropriately utilized.

To that end, in situations where it can be determined that routine maintenance would not cause additional environmental impacts than which were originally mitigated for, there should not be a need for permitting the maintenance. Removing this permitting requirement would both simplify the process and expedite the overall timeline for conducting routine maintenance.

Furthermore, environmental restoration projects, by their very nature, are intended to protect, restore, and enhance the environment, and should be exempt from mitigation.

Valley Water's Approach to Address Legislative, Regulatory, and Administrative Needs

Seek legislative, regulatory and administrative paths in conjunction with interested stakeholder groups to: 1) pursue efforts that will allow for public agencies, which are performing routine maintenance, to bring flood protection projects back to their original capacity to be exempt from needing to obtain a permit, as long as the maintenance would not cause any additional environment impacts which were not originally mitigated; 2) pursue efforts that will allow for true environmental restoration projects to be exempt from requiring mitigation, and 3) pursue efforts which will provide agencies alternatives and exemptions to endowments if the agency has adopted the local or regional watershed management plan.

Public Entities Need Flexibility in Financial Assurance Mechanisms for Long-Term Management of Compensatory Mitigation Sites

Summary of Legislative and Administrative Needs

Permitting agencies are requiring financial assurances for long-term management of compensatory mitigation sites as a

condition of permit issuance. Federal and state agencies have recently been insistent that endowments are the only avenue to ensure the long-term sustainability of a compensatory mitigation site.

The U.S. Army Corps of Engineers (USACE), through its district engineer, determines the compensatory mitigation for a specific project. As part of this compensatory mitigation, the district engineer requires financial assurances for the completion of the mitigation project, as well as financing mechanisms for the long-term management of the mitigation property.

Financing of long-term sustainability of a mitigation project after its completed, PP 19649 Final Rule, Supplemental Information re 33 CFR 332.7 (USACE) and 40 CFR 230.97 Management (d) (U.S. Environmental Protection Agency) states "In cases where compensatory mitigation project sites are owned by public entities, it may not be necessary to include provisions for the financing of any required long-term management if, for example, a formal, documented commitment from a government agency is provided (i.e., stewardship commitment). For public agencies identifying adequate financing at the time of permit issuance may be problematic since agency funding can vary from year-to-year with budget cycles, thus underscoring the need for a formal, documented commitment.

The State Government Codes 65966 (b) and 65967 (a) & (b) indicate there is flexibility in methods of funding for the long-term stewardship of mitigation property, and that an endowment is not the only option.

Valley Water's Approach to Address Legislative and Administrative Needs

Valley Water seeks to engage with applicable state and federal agency senior officials to ensure flexibility in long-term financial assurances is available to public entities including exemption from endowments, and to clarify changes in agency policy if necessary.

Water Resources Development Act of 2007 and Water Resources Development Act of 2014 Implementation

Funding the Upper Llagas Creek Flood Protection Project Through the Water Resources Development Act or Other Appropriations

Summary of Legislative Needs

Valley Water's Upper Llagas Creek Flood Protection Project authorization language needs to be revised to eliminate an errant paragraph that was included in the Water Resources Development Act of 2007 (WRDA) authorization bill. This language has created confusion in providing direction to the USACE and the Office of Management and Budget. In addition, the project's progress has been severely impacted by lack of appropriations from Congress. One way to address this is to explore reversing WRDA authorization back to the Natural Resources Conservation Service (NRCS), who had it prior to 1999. Since the USACE replaced NRCS for this project as part of WRDA 1999, funding has dwindled significantly, hampering this project's progress. Critical focus needs to be put on securing appropriations for the project going forward. Due to the restrictions on earmarks, Water Resources Reform and Development Act of 2014 (WRRDA) was not a vehicle that was available to fix the errant paragraph.

Valley Water's Approach to Address Legislative Needs

Continue to seek language clarifying the intent for the Upper Llagas Creek Flood Protection Project in WRDA or seek alternative federal sponsorship through WRDA or other federal legislation. Emphasis will be placed at all levels, both locally and in Washington, D.C., to secure future federal funding for the Upper Llagas Creek Flood Protection Project.

Additional emphasis will be placed on securing alternative funding, including funding from the U.S. Department of Agriculture through the Farm Bill or other agricultural appropriations as appropriate to ultimately allocate funding to NRCS.

U.S. Army Corps of Engineers (USACE) Levee Vegetation Policy

Summary of Administrative Needs

USACE currently requires all vegetation other than grasses to be removed from levees and within a 15-foot buffer zone on either side of USACE-inspected levees, which often provide high quality riparian habitat. If Valley Water doesn't remove the vegetation, USACE may "fail" the levee and remove it from its rehabilitation and inspection program, which would then alert Federal Emergency Management Agency (FEMA) and others that the levee is unacceptable and eliminate the possibility of USACE funding for flood-related work. Consequently, it is in Valley Water's interest to encourage USACE to revise this policy in order to 1) prevent required removal of valuable riparian vegetation, and 2) prevent the consequences associated with USACE "failing" levees that retain this valuable vegetation.

In the WRRDA of 2014, Congress directed USACE to evaluate the current Levee Vegetation Policy, including preservation of habitat, vegetation impacts during flooding, historic links between vegetation and flood risk, economic and environmental impacts, and factors that promote regional variances in the program.

Valley Water's Approach to Address Administrative Needs

Work with USACE and Congress to ensure that Valley Water's desires relative to vegetation on levees are addressed through the implementation phase of WRRDA.

U.S. Army Corps of Engineers Section 104/221 Authority

Summary of Legislative and Administrative Needs
In 2011, the Assistant Secretary of the Army for Civil Works (ASA-CW) decided to no longer approve Section 104 applications. Section 104 crediting (Water Resources Development Act of 1986) allowed non-federal interests to repair design deficiencies and to make levee improvements as quickly as possible, while not impacting the USACE study processes.

Instead of utilizing Section 104, the ASA-CW elected to process credit requests under Section 221 of the Flood Control Act of 1970 (as amended by Section 2003 of the WRDA of 2007). Section 221 as implemented by the ASA-CW does not promote construction by non-federal interests.

Without a reasonable policy, local agencies' ability to move projects along faster with local dollars would be jeopardized.

Valley Water's Approach to Address Legislative and Administrative Needs
Work with USACE and Congress to ensure that Valley Water's needs are addressed through the implementation phase of WRRDA 2014. Continue to lobby and create support for the ASA-CW to grant and approve Section 104 credit until a new acceptable policy on crediting is put into place.

Infrastructure Funding

Dam Evaluation, Rehabilitation, and Repair Legislation

Summary of Legislative Needs
Valley Water operates ten dams in Santa Clara County as part of our reservoir system. Several of these dams are undergoing seismic evaluations to assess their ability to withstand current standards for earthquakes. These evaluations have revealed that gravelly soils that can liquefy were left in the foundations of many of our dams. The Anderson Reservoir dam evaluation concluded that the dam needs to be seismically retrofitted, at an approximate cost of $600 million. The National Dam Safety Program currently provides financial assistance to states for strengthening their dam safety programs, but it does not provide assistance for infrastructure improvements when a dam is found to be deficient. A comprehensive federal assessment of the state of the nation's dams would enable Congress to fully understand what role, if any, Congress should have in the rehabilitation and repairs of non-federally funded dams.

Valley Water's Approach to Address Legislative Needs
Continue to support the introduction of a Dam Evaluation, Rehabilitation, and Repair Act that will assess the state of the nation's dams and will ultimately provide grants or infrastructure loans for structurally unfit dams.

Water Supply

Improved Water Efficiency Labeling Program

Summary of Legislative Needs
The Water Efficiency Labeling Scheme (WELS) is an international water efficiency labeling program designed to provide information to consumers, through the use of specific labels, that indicate the level of water efficiency of products that use water. Both Australia and New Zealand have implemented these labels on the following types of products: washing machines, dishwashers, toilets, urinals, showers and faucets. The purpose of the label is to help consumers choose products that use less water while still providing a satisfactory level of quality and performance.

In the United States, the Environmental Protection Agency (EPA) manages the WaterSense partnership program. Under this program, water efficient products are certified independently. For companies to use the WaterSense label, they must sign a partnership agreement. Unlike the WELS program, WaterSense labels do not indicate the level of water efficiency of a specific product. Instead the label indicates that the product is 20 percent more water efficient than the average product in that category (as well as other criteria). Changing the labeling to indicate the level of water efficiency of a product (much like the Energy Star program on appliances) provides consumers with a better understanding of how water efficient a product is that they are considering buying.

Valley Water's Approach to Address Legislative Needs
Initiate discussions with Congressional members and the EPA on potential changes to the water efficiency labeling program in the WaterSense and other relevant programs at the federal level.

Recycled Water Indirect/Direct Potable Use Proposal

Summary of Legislative and Regulatory Needs
To ensure an adequate and reliable supply of high-quality water, Valley Water has partnered with cities and water retailers in the county to develop recycled water supplies. Recycled water use is expected to expand in the coming years. In 2014, Valley Water completed the Silicon Valley Advanced Water Purification Center, an advanced water treatment facility that produces up to 8 million gallons per day of highly purified recycled water that is blended into existing recycled water supplies, thereby improving overall recycled water quality so that the water can be used for a wider variety of irrigation and industrial purposes. Longer term, Valley Water is investigating using highly purified recycled water for replenishment of groundwater basins, similar to the successful groundwater replenishment system operated by the Orange County Water District, and potentially direct potable reuse.

Valley Water has been involved in the development of indirect potable reuse in Silicon Valley and in direct potable reuse research. In 2010 and 2013, the California State Legislature mandated that the state Department of Public Health (now Division of Drinking Water), in consultation with the State Water Resources Control Board (State Water Board), report on the feasibility of developing uniform water recycling criteria for direct potable reuse by December 31, 2016. The State Water Board released its draft report in September 2016, which suggested that direct potable reuse is feasible but requires additional research. In 2017, AB 574 (Quirk) was signed into law requiring the State Water Board to establish a framework for regulating direct potable reuse by June 1, 2018. The first draft of the framework was released in April 2018, followed by a second edition in August 2019.

Valley Water's Approach to Address Legislative and Regulatory Needs

Continue to facilitate the creation of coalitions and efforts to support adequately funding recycled and purified water, and other programs that will allow full integration of stormwater, groundwater recharge, flood water, gray water, and indirect and direct potable reuse. Continue to work with the state and other stakeholders to further the development of regulations for direct potable reuse.

Flood Protection Funding

Pursue a Lower Class Level Under the National Flood Insurance Program's Community Rating System

Summary of Administrative Needs

The Community Rating System (CRS) is part of the Federal Emergency Management Agency's (FEMA) National Flood Insurance Program (NFIP). By participating in CRS, flood insurance premiums are discounted to reward community actions that meet flood protection and management goals of the CRS. Valley Water is not eligible to fully participate in the NFIP because it is not a permitting authority and lacks the regulatory mechanisms to implement the minimum requirements of the NFIP. However, in 1998, Valley Water was set up as a "fictitious" CRS community, despite not meeting the minimum requirements. Valley Water is the only "fictitious" community in the nation. Valley Water currently has a rating of "8" on a 1-10 scale, with "1" earning the greatest discount. Additionally, Valley Water provides many of the services through which the cities in the county earn their rating, without which they would not have their current CRS class level.

Valley Water's Approach to Address Administrative Needs

Initiate dialogue with FEMA and others to determine how to structure the CRS program locally so that Valley Water may best position itself to lower its rating and those of our partner cities. Concurrently, and incorporating relevant feedback from conversations with FEMA, initiate dialogue with Santa Clara County cities to create a framework managed by Valley Water that would enable them to achieve lower ratings and higher discounts for their residents.

KEY LEGISLATION AT THE FEDERAL, STATE, AND LOCAL/REGIONAL LEVELS

Key Federal Legislation in 2020

2020 marked the second session of a two-year Congress (the 116th). All bills listed below will need to be passed by Congress and signed by the president before the end of 2020, or they will need to be reintroduced in the next Congress (the 117th).

Bill (Sponsor)	Subject	District Position	Status
H.R. 548 (Calvert)	Federally Integrated Species Health (FISH) Act	Support	Introduced and referred to the House Committee on Natural Resources
H.R. 357 (Garamendi)	Sacramento-San Joaquin Delta National Heritage Area Act	Support	Signed into law as part of the John D. Dingell, Jr. Conservation, Management, and Recreation Act (P.L. 116-9)
S. 40 (Barrasso)	Bureau of Reclamation Transparency Act	Support and Amend	Introduced and referred to the Senate Committee on Energy and Natural Resources
H.R. 1137 (Garamendi)	To amend the Water Resources Development Act of 1986 to repeal the authority relating to reprogramming during national emergencies	Support	Introduced and referred to the House Committee on Transportation and Infrastructure
S. 326 (Udall)	Restrictions Against Illegitimate Declarations for Emergency Re-appropriations (RAIDER) Act of 2019	Support	Introduced and referred to the House Committee on Appropriations
H.R. 1162 (Napolitano)	Water Recycling Improvement and Investment Act	Support	Hearing held in the House Committee on Natural Resources (June 13, 2019)
H.R. 1132 (Speier)	San Francisco Bay Restoration Act of 2019	Support	Passed the House by voice vote (September 19, 2019); provisions included in FY21 Omnibus Appropriations Bill (H.R. 133)

Bill (Sponsor)	Subject	District Position	Status
H.R. 1497 (DeFazio)	Water Quality Protection and Job Creation Act	Support	Markup held in the House Committee on Transportation and Infrastructure, ordered to be reported favorably (October 29, 2019)
H.R. 658 (DeLauro)	National Infrastructure Development Bank Act of 2019	Support	Introduced and referred to the House Committees on Energy and Commerce; Transportation and Infrastructure; Financial Services; and Ways and Means
H.R. 1417 (Lawrence) / S. 611 (Sanders)	Water Affordability, Transparency, Equity, and Reliability (WATER) Act of 2019	Support	H.R. 1417: Introduced and referred to the House Committees on Transportation and Infrastructure; Energy and Commerce; Ways and Means; and Agriculture; S. 611: Introduced and referred to the Senate Committee on Environment and Public Works
H.R. 1621 (McClintock)	Water Supply Permitting Coordination Act	Support	Introduced and referred to the House Committee on Natural Resources
H.R. 2313 (Huffman)	Water Conservation Rebate Tax Parity Act	Support	Introduced and referred to the House Committee on Ways and Means
S. 923 (Feinstein)	Fighting Homelessness Through Services and Housing Act	Support	Introduced and referred to the Senate Committee on Health, Education, Labor and Pensions
H.R. 2473 (Harder)	Securing Access for the central Valley and Enhancing (SAVE) Water Resources Act	Support and Amend	Hearing held in the House Committee on Natural Resources (June 13, 2019)
H.R. 363 (Calvert)	Reducing Environmental Barriers to Unified Infrastructure and Land	Support	Introduced and referred to the House Committee on Natural Resources

Bill (Sponsor)	Subject	District Position	Status
	Development (REBUILD) Act of 2019		
S. 1932 (Gardner)	Drought Resiliency and Water Supply Infrastructure Act	Support and Amend	Hearing held in the Senate Committee on Energy and Natural Resources (July 18, 2019)
S. 1730 (Harris) / H.R. 3115 (Pallone)	The Living Shorelines Act of 2019	Support	S. 1730: Introduced and referred to the Senate Committee on Commerce, Science, and Transportation; H.R. 3115: Markup held in the House Committee on Natural Resources, ordered to be reported favorably (September 25, 2019)
H.R. 3723 (Levin)	The Desalination Development Act	Support	Hearing held in the House Committee on Natural Resources (July 25, 2019)
H.R. 855 (Peters)	The Strengthening The Resiliency of Our Nation on the Ground (STRONG) Act	Support	Introduced and referred to the House Committee on Transportation and Infrastructure
S. 403 (Whitehouse) / H.R. 1159 (Cicilline)	Innovative Materials for America's Growth and Infrastructure Newly Expanded (IMAGINE) Act of 2019	Support and Amend	S. 403: Introduced and referred to the Senate Committee on Environment and Public Works; H.R. 1159: Introduced and referred to the House Committees on Transportation and Infrastructure; Science, Space, and Technology; and Energy and Commerce
H.R. 4033 (Kildee) / S. 2466 (Harris)	Water Justice Act	Support and Amend	Introduced and referred to the House Committees on Energy and Commerce; Budget; Ways and Means; Natural Resources; Agriculture; and

Bill (Sponsor)	Subject	District Position	Status
			Transportation and Infrastructure
S. 1837 (Gillibrand) / H.R. 3254 (Delgado)	Protecting Infrastructure and Promoting the Economy (PIPE) Act	Support and Amend	S. 1837: Introduced and referred to the Senate Committee on Environment and Public Works; H.R. 3254: Introduced and referred to the House Committee on Transportation and Infrastructure and the Committee on Energy and Commerce
H.R. 3091 (Loebsack)	National Flood Research and Education Center Act	Support	Introduced and referred to the House Committee on Science, Space, and Technology and the Committee on Transportation and Infrastructure
S. 2236 (Booker) / H.R. 3923 (Ruiz)	Environmental Justice Act of 2019	Support	Introduced and referred to the Senate Committee on Environment and Public Works
H.R. 5752 (Costa)	Conveyance Capacity Correction Act	Support	Introduced and referred to the House Committee on Natural Resources
H.R. 5504 (Brownley)	To amend the National Dam Safety Program Act with respect to the definition of eligible high hazard potential dam, and for other purposes	Support	Introduced and referred to the House Committee on Transportation and Infrastructure; provisions included in FY21 Omnibus Appropriations Bill (H.R. 133)
H.R. 5302 (McNerney)	Western Water Recycling and Drought Relief Act	Support and Amend	Introduced and referred to the House Committee on Natural Resources
H.R. 5316 (Cox)	Move Water Now Act	Support and Amend	Marked up in the House Committee on Natural Resources, ordered to be

Bill (Sponsor)	Subject	District Position	Status
			reported favorably (February 12, 2020)
H.R. XXXX (Pelosi)	Coronavirus Stimulus Phase 3 (became the Health and Economic Recovery Omnibus Emergency Solutions Act or the HEROES Act, H.R. 6800)	Support and Amend	Passed the House (May 15, 2020)
H.R. XXXX (Pelosi)	Coronavirus Stimulus Phases 3.5 (became the Paycheck Protection Program Flexibility Act, H.R. 7010) and 4	Support and Amend	H.R. 7010 was signed into law on June 5, 2020 (P.L. 116-142)
H.R. 2 (DeFazio)	Investing in a New Vision for the Environment and Surface Transportation in America Act (INVEST in America Act)	Support and Amend	Passed the House (July 1, 2020)
H.R. XXXX (Huffman)	Furthering Underutilized Technologies and Unleashing Responsible Expenditures for Drought Resiliency (FUTURE Drought Resiliency) Act	Support and Amend	Not yet introduced (provisions included as part of H.R. 2)
S. 3591 (Barrasso)	America's Water Infrastructure Act of 2020	Support and Amend	Markup held in the Senate Committee on Environment and Public Works, ordered to be reported favorably (May 11, 2020); provisions included in FY21 Omnibus Appropriations Bill (H.R. 133)
S. 3590 (Barrasso)	Drinking Water Infrastructure Act of 2020	Support	Markup held in the Senate Committee on Environment and Public Works, ordered to be reported favorably (May 11, 2020)
H.R. 7073 (Garamendi)	Special Districts Provide Essential Services Act	Support	Introduced and referred to the House Committee on Oversight and Reform and the

Bill (Sponsor)	Subject	District Position	Status
			Committee on Financial Services
S. 3811 (Feinstein)	Restoration of Essential Conveyance Act	Support	Hearing held in the Senate Committee on Energy and Natural Resources (July 22, 2020)
S. 4188 (Harris)	Water for Tomorrow Act	Support and Amend	Hearing held in the Senate Committee on Energy and Natural Resources (July 22)
H.R. 7575 (DeFazio)	Water Resources Development Act	Support and Amend	Passed the House (July 29); provisions included in FY21 Omnibus Appropriations Bill (H.R. 133)
S. 4308 (Sinema)	A bill to amend the Social Security Act to include special districts in the coronavirus relief fund, to direct the Secretary to include special districts as an eligible issuer under the Municipal Liquidity Facility, and for other purposes.	Support	Introduced and referred to the Senate Committee on Finance
S. 2596 (Duckworth)	Voluntary Water Partnership for Distressed Communities Act of 2019	Support	Introduced and referred to the Senate Committee on Environment and Public Works
S. 4530 (Feinstein) / H.R. 8041 (Harder)	Snow Water Supply Forecasting Program Authorization Act	Support	S. 4530: Introduced and referred to the Senate Committee on Energy and Natural Resources; H.R. 8041: Introduced and referred to the House Committee on Natural Resources
H.R. 8166 (Cox)	Western Water Storage Infrastructure Act	Support and Amend	Introduced and referred to the House Committee on Natural Resources

Bill (Sponsor)	Subject	District Position	Status
H.R. XXXX – became H.R. 133	Coronavirus Stimulus Bill (Phase 4)	Support and Amend	Passed both the House and Senate, awaiting President's signature (as of Dec. 22, 2020)

Key State Legislation in 2020

The COVID-19 pandemic made 2020 a challenging year for legislation in Sacramento with only 428 bills making it to the Governor's desk, less than half the usual number. Of the 2,223 bills introduced in 2020, only 17% were enacted, largely due to the reduced capacity of the Legislature to convene committee hearings and floor sessions.

Bill	Author	Subject	District Position	Status
AB 77	Committee on Budget	Education Finance: Education Omnibus Budget Trailer Bill	Oppose	Failed – Senate Floor Deadline
AB 292	Quirk	Recycled Water: Raw Water and Groundwater Augmentation	Support	Failed – Senate Floor Deadline
AB 1580	Levine	Major Infrastructure Construction Projects: Oversight Committees	Oppose	Failed – Senate Appropriations Committee Suspense
AB 1659	Bloom	Large Electrical Corporations: Wildfire Mitigation: Securitization	Support and Amend	Failed – Senate Floor Deadline
AB 2060	Holden	Drinking Water: Pipes and Fittings: Lead Content	Support	Failed – Senate Appropriations Committee Suspense
AB 2560	Quirk	Water Quality: Notification and Response Levels: Procedures	Support	Signed by the Governor
AB 3005	R. Rivas	Expedited Dam Safety for Silicon Valley Act	Sponsor	Vetoed by the Governor
AB 3232	Friedman	Commercial Washing Machines: Microfiber Filter	Support	Failed – Assembly Environmental Safety and Toxic Materials Committee Deadline

AB 3256	E. Garcia	Economic Recovery, Wildfire Prevention, Safe Drinking Water, Drought Preparation, and Flood Protection Bond Act of 2020.	Support If Amended	Failed – Assembly Rules Committee Deadline
ACA 1	Aguiar-Curry	Local Government Financing: Voter Approval for Affordable Housing and Public Infrastructure	Support	Failed – Assembly Floor Deadline
ACA 5	Weber	Government Preferences	Support	Chaptered by the Secretary of State
SB 54	Allen	Solid Waste: Packaging and Products	Support	Failed Passage – Assembly Floor
SB 952	Nielsen	Sales and Use Taxes: Exemption: Backup Electrical Resources: Deenergization Events	Support	Failed – Assembly Revenue & Taxation Committee Deadline
SB 971	Hertzberg	Small Water Supplier and Countywide Water Shortage Contingency Planning	Support	Failed – Senate Natural Resources and Water Committee Deadline
SB 1044	Allen	Firefighting Equipment and Foam: PFAS Chemicals	Support	Signed by the Governor
SB 1188	Stern	The California Water Plan	Support	Failed – Senate Natural Resources and Water Committee Deadline

Key State Ballot Measures in 2020

Valley Water supported two statewide ballot measures in 2020. One included a change to property tax funding, and the other would have allowed public agencies to consider racial and gender diversity when hiring staff and awarding contracts. Both measures failed passage.

Measure	Author	Subject	District Position	Status
Proposition 15	Initiative	Tax on Commercial and Industrial Properties for Education and Local Government Funding Initiative	Support	Failed 48%-52% on November 3
Proposition 16	Legislature (ACA 5)	Allows Diversity as a Factor in Public Employment, Education, and Contracting Decisions, Legislative Constitutional Amendment	Support	Failed 42.8%-57.2% on November 3

2020 Tours, Community Events, and Sponsorships

Tours (Organized and Participated)

1. March 20, 2020: Water Education for Latino Leaders (WELL) Tour (Postponed due to COVID-19 Pandemic)
2. October 9, 2020: VIP Water Walk Tour

Community Events

1. Acterra's 50th Anniversary Celebration (Virtual)
2. Acterra's Business Environmental Award Ceremony (Virtual)
3. Asian Americans for Community Involvement (AACI) 2020 Better Together Virtual Gala
4. Associates of Environment Professionals (AEP) 2020 Statewide Conference (Virtual)
5. Bay Area Council's 2020 Business Hall of Fame Awards (Virtual)
6. Bay Area Council's 2020 Pacific Summit (Virtual)
7. Bay Nature Institute's Local Hero Award (Virtual)
8. Bay Planning Coalition Briefing of Funding for Sea Level Rise (Virtual)
9. Bay Planning Coalition Dredging & Beneficial Reuse Workshop (Virtual)
10. Bay Planning Coalition Greening Our Transportation System (Virtual)
11. Bay Planning Coalition Spring Summit (Virtual)
12. Bay Planning Coalition Water Expert Briefing (Virtual)
13. Billy DeFrank Silicon Valley LGBTQ Community Center Annual Movie Benefit
14. California/Hawaii State NAACP 33rd Annual Conference (Virtual)
15. City of San Jose Council District 4 Health Fair
16. Cupertino Chamber of Commerce Annual Lunar New Year
17. Cupertino Chamber of Commerce STAR Awards (Virtual)
18. Gilroy Chamber of Commerce Annual Spice of Life Awards
19. Green Foothills Nature's Inspiration 2020 (Virtual)
20. Hispanic Foundation of Silicon Valley's 2020 Hispanic Ball (Virtual)
21. Joint Venture State of the Valley 2020 (Virtual)
22. McKelvey Ball Park Opening/Ribbon Cutting

23. Milpitas Chamber of Commerce 17th Annual Action & Crab Feed
24. Morgan Hill Chamber of Commerce Celebrate Morgan Hill Dinner
25. Mountain View Chamber of Commerce Celebration of Leaders Awards Dinner
26. National NAACP 2020 Sea Level Rise Conference (Virtual)
27. Sacramento River Watershed Program California Water Policy Conference 29: California Streamin' (Virtual)
28. San Jose State University's Society of Latino Engineers: Science Extravaganza
29. Santa Clara County Farm Bureau Summer BBQ
30. Silicon Valley Leadership Group 2020 Annual Policy Luncheon
31. Silicon Valley Leadership Group 2020 Energy & Sustainability Summit (Virtual)
32. Silicon Valley Leadership Group 2020 Game Changers (Virtual)
33. Silicon Valley Leadership Group 2020 Regional Economic Forum (Virtual)
34. Silicon Valley Organization Breakfast: Future of Live Events (Virtual)
35. Silicon Valley Organization January & February Member Breakfast (Virtual)
36. South Valley Science and Engineering Fair
37. Sunnyvale Chamber of Commerce 55th Annual Murphy Awards
38. Sustainable Silicon Valley 2020 WaterPalooza! (Virtual)
39. Transportation Choices for Sustainable Communities' 2020 Green Street Symposium (Virtual)
40. Veggielution Farm Veggie Fest 2020 (Virtual)
41. Water Education for Latino Leader's (WELL) Conference (Virtual)
42. WateReuse California Association 2020 Annual Conference (Virtual)

Sponsorships

1. 38th Annual Salmonid Restoration Federation Conference
2. American Association of University Women (AAUW) Morgan Hill Chapter Wildflower Run
3. American Society of Civil Engineers 2020 WRYMC Conference
4. Asian Americans for Community Involvement (AACI) 2020 Better Together Virtual Gala
5. Asian Pacific American Leadership Institute (APALI) 23rd Anniversary Gala

6. Association of California Water Agencies (ACWA): 2020 ACWA Summer Virtual Conference Resilience Rising
7. Association of Environmental Professionals (AEP) 2020 Statewide Conference
8. Bay Area Council's 2020 Business Hall of Fame Awards
9. Bay Area Council's 2020 Pacific Summit
10. Bay Nature Institute's Local Hero Awards 2020
11. Billy DeFrank Silicon Valley LGBTQ Community Center Annual Movie Benefit
12. California Lake Management Society (CALMS) 2020 Annual Conference
13. California Water Efficiency Partnership (CalWEP): Peer to Peer
14. California/Hawaii State NAACP 33rd Annual Conference
15. City of Palo Alto: 2020 Great Race for Saving Water & Earth Day Festival
16. City of San Jose Environmental Services: 2020 Pathways to Climate Smart Careers Job Fair
17. Green Foothills Nature's Inspiration 2020
18. Greenbelt Alliance's Savor the Greenbelt 2020
19. Guadalupe River Park Conservancy: Window on the River Park 2020
20. Hispanic Foundation of Silicon Valley: 2020 Hispanic Ball
21. Imagine H2O: Water Innovation Week 2020 - The Next Decade
22. Master of Public Administration Student Association of SJSU (Tower Foundation): MPA Graduation 2020
23. Mushroom Mardi Gras Festival of Morgan Hill 2020
24. National Association of Flood and Stormwater Management Agencies (NAFSMA) 2020 Virtual Flood and Stormwater Management Conference
25. National NAACP 2020 Sea Level Rise Conference
26. Rotary Club of Cupertino (Cupertino Rotary Endowment Foundation): Fall Festival Recognition Program
27. Sacramento River Watershed Program California Water Policy Conference 29: California Streamin'
28. San Jose Conservation Corps + Charter School Annual Spring Luncheon: Building Dreams
29. San Jose State University: Step into a Diverse World

30. San Jose State University’s Society of Latino Engineers: Science Extravaganza
31. San Jose/Silicon Valley NAACP 68th Annual Freedom and Friendship Gala
32. Silicon Valley Bicycle Coalition: Bike-to-Work Day 2020
33. Silicon Valley Coalition of Ethnic Chambers: Silicon Valley Heritage Expo
34. Silicon Valley Leadership Group Regional Economic Forum
35. Silicon Valley Leadership Group’s 2020 Energy & Sustainability Summit
36. Smart Yards Education: Earth Day Celebration
37. Society of Women Engineers Santa Clara Valley Scholarship Program 2020
38. South Valley Science & Engineering Fair
39. The Tech Interactive: The Tech Challenge Program
40. Transportation Choices for Sustainable Communities Green Street Symposium
41. Valley Medical Center Foundation: Women's Leadership Policy Summit
42. Veggielution Farm Veggie Fest 2020
43. Water Education for Latino Leaders (WELL) 2020 Conference
44. WateReuse California Association 2020 Annual Conference

01/26/2021
ITEM 2.1-A
HANDOUT

Government Relations Program Update and 2021 Legislative Outlook

Presented by: **Don Rocha**, Acting Deputy Administrative Officer for Government Relations

January 26, 2021

Valley Water

Government Relations Activities

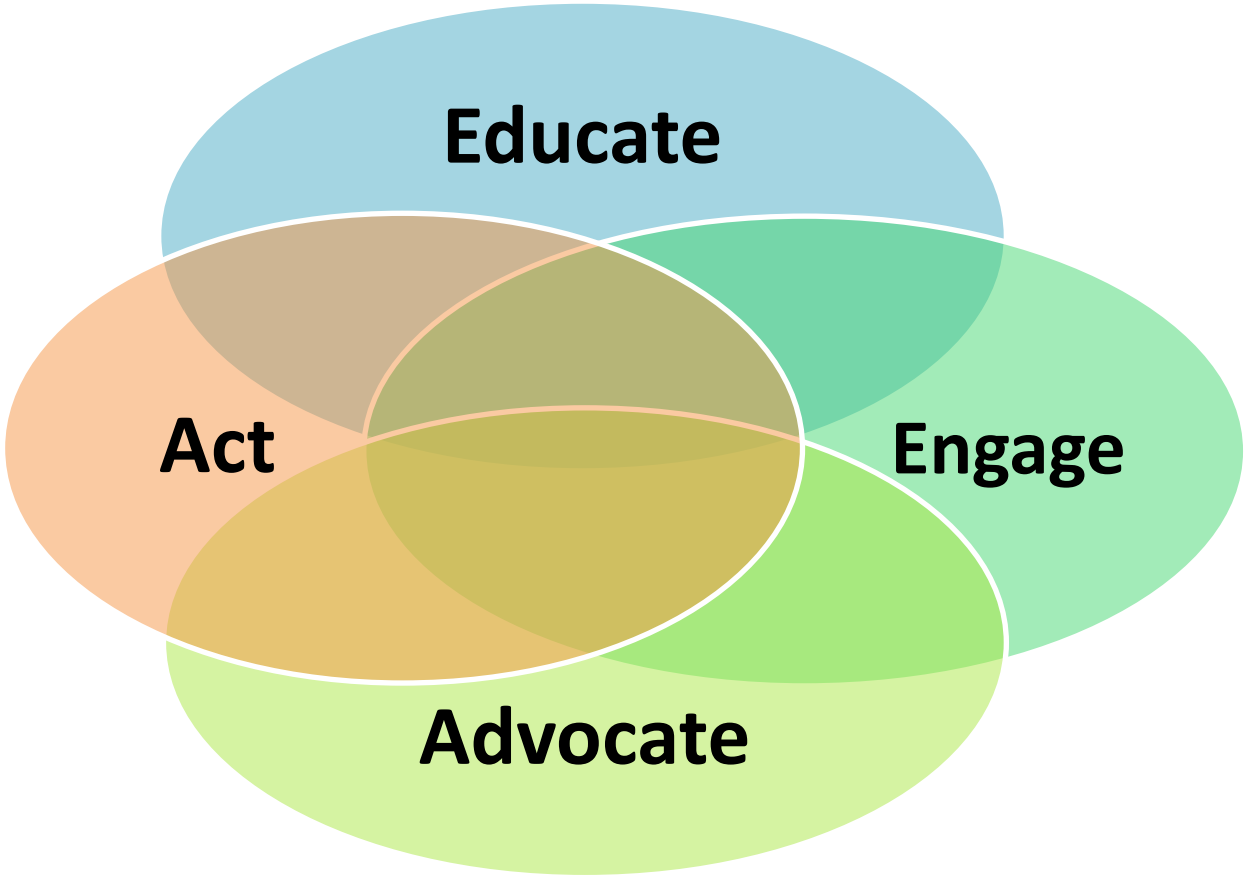

- Emerging issues in the public realm
- Shape public and regulatory policy to advance Valley Water's mission
- Funding for Valley Water projects
- Defending against punitive legislation and regulatory initiatives
- Advocacy, strategic partnerships, and stakeholder engagement

Government Relations Program Guidance

Valley Water

2021
Legislative Guiding Principles

Serving 2 million people living and working in Silicon Valley, Valley Water is the primary water resources agency for Santa Clara County, California.

Valley Water acts not only as the county's water wholesaler, but also as its flood protection agency and the steward for its watersheds, streams and creeks, underground aquifers and Valley Water-built reservoirs. As the county's water wholesaler, Valley Water makes sure there is enough clean, safe water for the county's residents. As the agency responsible for local flood protection, Valley Water works diligently to protect Santa Clara Valley homes, schools, roadways, and businesses from the devastating effects of flooding. Our watershed and stream stewardship responsibilities include protection and restoration of habitats, and protection of endangered species in connection with carrying out the purposes of the District Act.

To support our efforts in managing critical water issues, Valley Water advocates for legislation that advances our key guiding principles:

I. Ensure a reliable supply of healthy, clean drinking water.
II. Reduce the potential for flood damages.
III. Enhance the quality of life through the protection and enhancement of watersheds, streams, and natural resources.
IV. Protect revenues, enhance revenues, and contain costs.
V. Encourage opportunities for job creation, and the protection and stability of Valley Water's workforce.

Advocacy and Engagement Efforts

Legislative Delegation

Valley Water advocates for projects and priorities with local, state, and federal legislators.

Assembly Member Robert Rivas presents AB 3005 on Assembly Floor

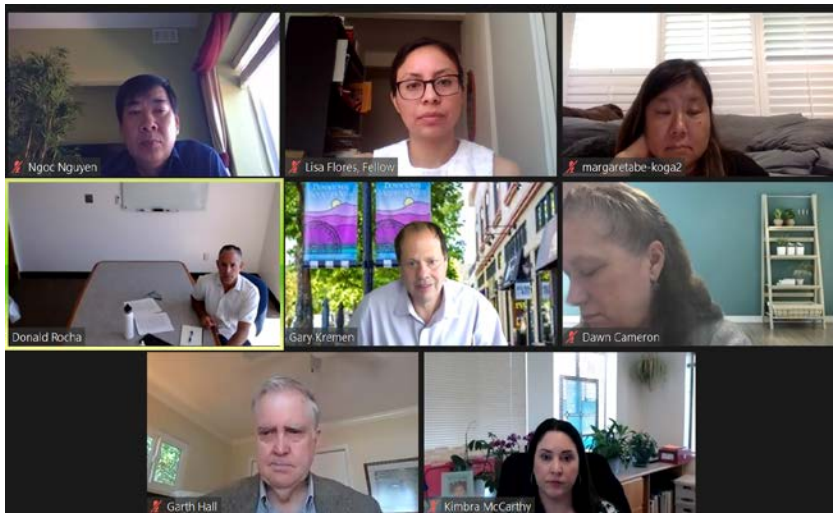

Director Kremen and staff provide project updates to City of Mountain View

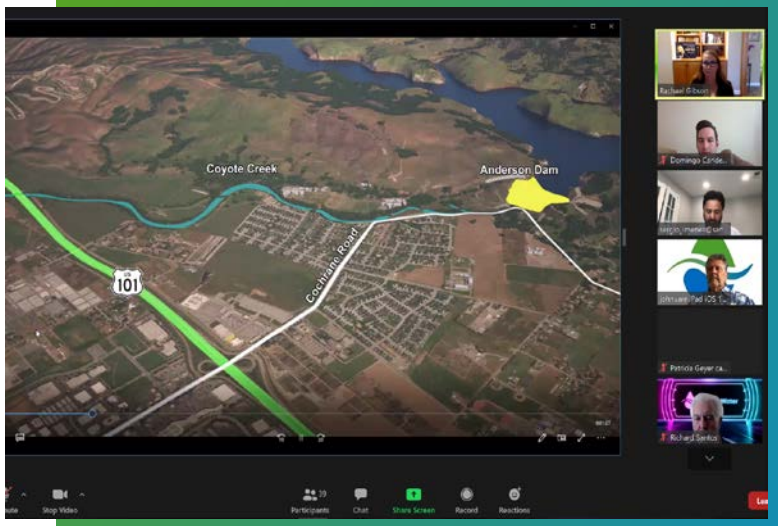

Directors Varela and Santos present on Anderson during Councilmember Sergio Jimenez's Town Hall

Valley Water

Advocacy and Engagement Efforts

Community Partners

Valley Water advocates for our projects and priorities in the community by:

- Engaging our partners and through community events, activities, and sponsorships; and
- Educating and aligning stakeholders through strategic efforts.

Director Santos at the District 4 Health Fair

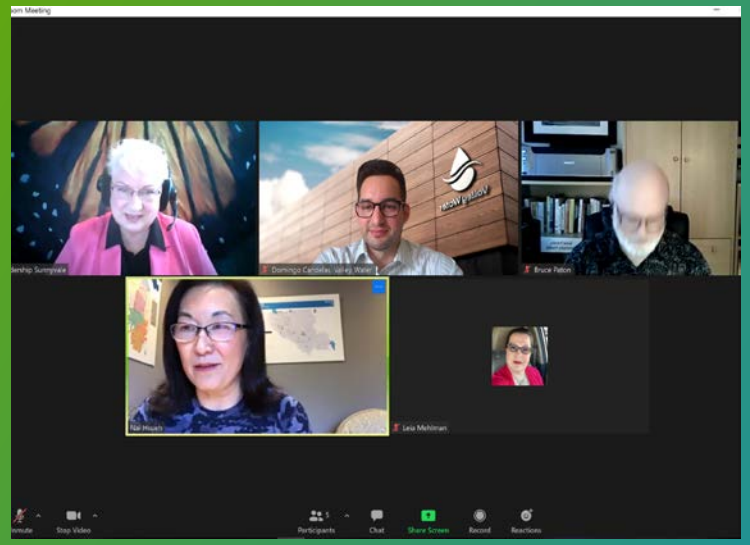

Chair Hsueh at Leadership Sunnyvale

Vice Chair Estremera at a Special Districts Association Meeting

Safe, Clean Water Blue Ribbon Forum

Valley Water

Sponsorships and Community Events

- 44 sponsorships
- Staff participation in 42 events

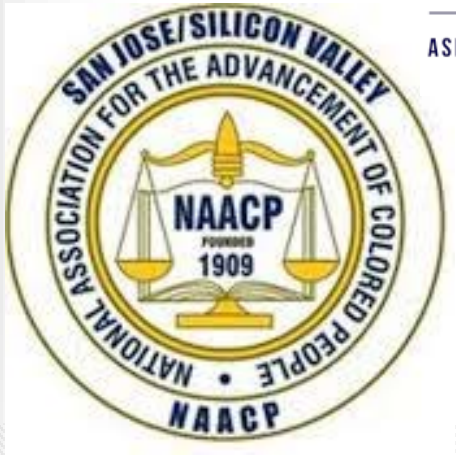

Legislation and Advocacy

Legislation and Funding

Federal Funding for Upper Guadalupe River Project Reevaluation

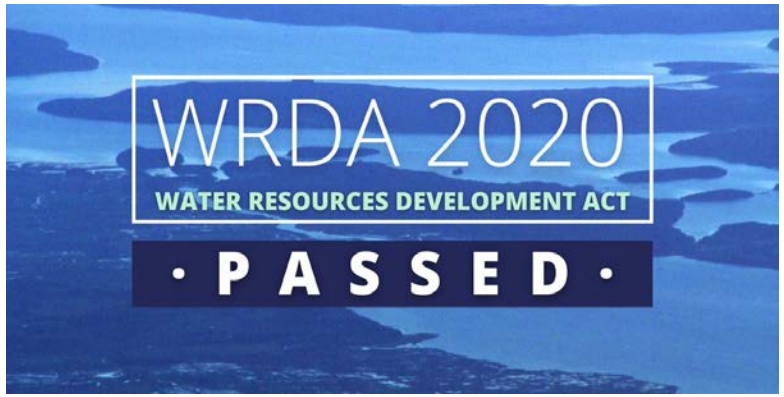

Advocacy Trips (Virtual)

Washington, D.C.:
March 30-April 1, November 16-18

State Legislative Days: May 19-20

Tours (Virtual)

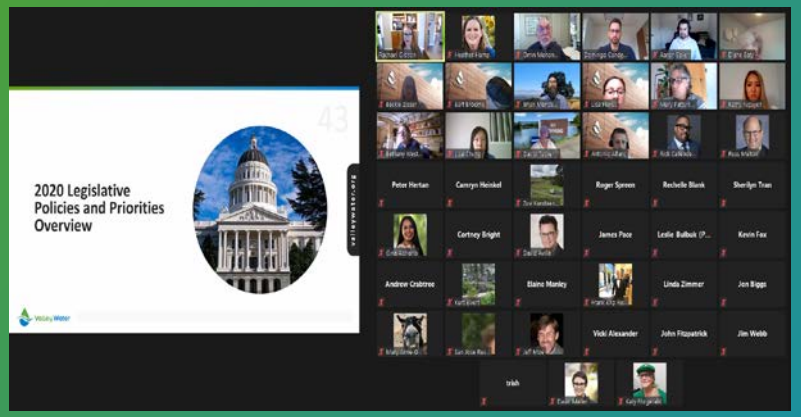

VIP Water Walk Tour

WeLL
Water Education for Latino Leaders

Valley Water

2021 Legislative Outlook

- **Monica Miller, Sacramento Advocates, LLC**
  - State Legislative Outlook
- **Julie Minerva, Carpi & Clay**
  - Federal Executive Agencies Outlook
- **Mark Kadesh, Kadesh & Associates**
  - Congressional Outlook

QUESTIONS

Valley Water

Clean Water • Healthy Environment • Flood Protection

Santa Clara Valley Water District

File No.: 20-1061

Agenda Date: 1/26/2021
Item No.: 3.1.

BOARD AGENDA MEMORANDUM

SUBJECT:
Adopt Resolution Setting Time and Date of Public Hearing on the Engineer's Report and CEQA Exemption Determination for the Pacheco Pumping Plant Electrical Current Limiting Fuse & Hydraulic Valve Operation System Upgrades, Small Capital Improvements, San Felipe Reach 1, Project No. 91214010, (Merced County, District 1).

RECOMMENDATION:
Adopt the Resolution SETTING TIME AND DATE OF PUBLIC HEARING ON THE ENGINEER'S REPORT AND CEQA EXEMPTION DETERMINATION FOR THE PACHECO PUMPING PLANT ELECTRICAL CURRENT LIMITING FUSE & HYDRAULIC VALVE OPERATIONS SYSTEM UPGRADES, to occur on February 09, 2021, at 1:00 PM by teleconference Zoom meeting.

SUMMARY:
The District's 5-Year Capital Improvement Program includes annual funding for small capital improvement projects for raw and treated water transmission and water treatment. Capital investments are designated as "small capital projects" if they cost less than $2.5M, can be completed within two fiscal years, and require no right of way acquisition.

The objective of the Project is to reduce the risk of an unplanned event that could result in an occupational injury (electrical arc flash); asset damage (pump motor failure); or pumping plant shutdown (hydraulic valve operating system (HVOS) controls systems failure).

Attachment 1 contains the resolution to set the time and place for the public hearing.

Engineer's Report and CEQA Exemption Determination

Section 12 of the District Act requires the Board to conduct a public hearing to consider all written and oral objections to the proposed project when: 1) the project is new construction; and 2) the project is funded by a single or joint zone of benefit. As the proposed Project meets both conditions, staff has prepared an Engineer's Report (Attachment 2) for the purpose of public disclosure.

In addition, staff has determined that the proposed Project would be exempt from CEQA review because it qualifies for a Categorical Exemption pursuant to CEQA Guidelines section 15301;

Existing Facilities {Class 1 - operation, repair, maintenance, minor alteration of existing structures and facilities].

Staff is recommending that the Board set a public hearing for February 9, 2021 to hear public comments on Valley Water's Engineer's Report and CEQA exemption determination. Following the public hearing, the Board will consider the CEQA exemption determination before considering approving the Engineer's Report and the proposed Project. The Notice of Public Hearing for the Engineer's Report is provided in Attachment 3.

FINANCIAL IMPACT:
There is no financial impact associated with approving staff's recommendation to set a public hearing on the Engineer's Report to consider the Project. The estimated cost to plan, design, and construct the above-described small capital project is $550,000 (2020 dollars). The Small Capital Improvements, San Felipe Reach 1 Project is included in the Five-Year 2021-25 Capital Improvement Program. Funds for the planned Project work for this fiscal year are included in the FY2020-21 Adopted Budget.

CEQA:
The recommended action does not constitute a "project" under California Environmental Quality Act (CEQA) because it does not have the potential for resulting in direct or reasonably foreseeable indirect physical change in the environment.

ATTACHMENTS:
Attachment 1: Resolution
Attachment 2: Engineer's Report
Attachment 3: Notice of Public Hearing

UNCLASSIFIED MANAGER:
Heath McMahon, 408-630-3126

BOARD OF DIRECTORS
SANTA CLARA VALLEY WATER DISTRICT

RESOLUTION NO. 21-

SETTING TIME AND DATE OF PUBLIC HEARING ON THE ENGINEER'S REPORT AND CEQA EXEMPTION DETERMINATION FOR PACHECO PUMPING PLANT ELECTRICAL CURRENT LIMITING FUSE & HYDRAULIC VALVE OPERATIONS SYSTEM UPGRADES

WHEREAS, the Santa Clara Valley Water District (Valley Water) has been duly and regularly established and exists pursuant to the provisions of the Santa Clara Valley Water District Act (District Act); and

WHEREAS, the Pacheco Pumping Plant Electrical Current Limiting Fuse & Hydraulic Valve Operating System (HVOS) Upgrades (proposed Project) is included in the Board-approved fiscal years 2021–2025 Capital Improvement Program under the Small Capital Improvements, San Felipe Reach 1 (Project No. 91214010); and

WHEREAS, on the 26th day of January 2021, the Engineer's Report for the proposed Project prepared by Valley Water's Engineers, titled "Pacheco Pumping Plant Electrical Current Limiting Fuse & HVOS Upgrades Project No. 91214010," dated December 2020, were made available to the Board of Directors, providing:

1. A general description of the proposed Project;

2. A general description of and map showing the location of the proposed Project and land, right of way, and easement required therefor; and

3. An estimate of the cost of the proposed Project and means of financing the cost.

WHEREAS, Section 12 of the District Act requires the Board to conduct a public hearing to hear testimony on a project when: (1) the project is new construction and (2) the project is funded by single or joint zones of benefits.

WHEREAS, the California Environmental Quality Act (CEQA) Guidelines section 15202(b) requires environmental review to be a subject of the public hearing if a public hearing is being held on a lead agency's decision to carry out or approve a project. Since Valley Water must conduct a public hearing on the Engineer's Report, the CEQA exemption determination for the proposed Project will also be considered during the hearing.

NOW, THEREFORE BE IT RESOLVED by the Board of Directors of the Santa Clara Valley Water District:

1. That the 9th day of February 2021 at 1:00 p.m., by teleconference Zoom meeting, be fixed as the time and place for a public hearing on the Engineer's Report and the CEQA exemption determination, and this Board of Directors will consider all written and oral comments to the proposed Project and CEQA determination; and

2. That the Engineer's Report for the proposed Project, titled; and "Pacheco Pumping Plant Electrical Current Limiting Fuse & HVOS Upgrades Project No. 91214010," dated

December 2020, is available for public inspection by any interested person at Valley Water's website: http://www.valleywater.org/PublicReviewDocuments.aspx.

In compliance with the State Emergency Services Act, the Governor's Emergency Declaration related to the COVID-19 pandemic, the Governor's Executive Order N-29-20, and the March 16, 2020 Shelter in Place Order of the County of Santa Clara Public Health Officer, Valley Water's offices are closed to the public. Therefore, the Engineer's Report is unavailable for public inspection at Valley Water's offices and only available online.

PASSED AND ADOPTED by the Board of Directors of the Santa Clara Valley Water District by the following vote on January 26, 2021:

AYES: Directors

NOES: Directors

ABSENT: Directors

ABSTAIN: Directors

SANTA CLARA VALLEY WATER DISTRICT

_____
TONY ESTREMERA
Chair, Board of Directors

ATTEST: MICHELE L. KING, CMC

_____
Clerk, Board of Directors

Small Capital Improvement Project: Pacheco Pumping Plant Electrical Current Limiting Fuse & HVOS Upgrades Engineer's Report

December 2020

Water Utility Capital Division

Valley Water
Clean Water • Healthy Environment • Flood Protection

(Page intentionally left blank)

SMALL CAPITAL IMPROVEMENT PROJECT: PACHECO PUMPING PLANT ELECTRICAL CURRENT LIMITING FUSE & HVOS UPGRADES

PROJECT NO. 91214010

ENGINEER'S REPORT

Prepared By:

Roderick R. Ramirez, P.E. Associate Engineer

Under the Direction of:

Emmanuel Aryee, P.E.
Engineering Unit Manager

Heath McMahon, P.E.
Deputy Operating Officer

Aaron Baker, P.E.
Chief Operating Officer

Enrico Callender
Chief Executive Officer

The Engineer's Report has been prepared under the direct supervision of the undersigned, who hereby certifies that he is a Registered Electrical Engineer in the State of California

December 2020

DISTRICT BOARD OF DIRECTORS

John L. Varela	**District 1**	**Nai Hsueh, Chair**	**District 5**
Barbara Keegan	**District 2**	**Tony Estremera, Vice Chair**	**District 6**
Richard Santos	**District 3**	**Gary Kremen**	**District 7**
Linda J. LeZotte	**District 4**		

(Page intentionally left blank)

1. PROJECT DESCRIPTION

This project plans, designs, and constructs new electrical safety and reliability system improvements for the main facility building at the Pacheco Pumping Plant, Dinosaur Point, Merced County, CA.

- Current Limiting Fuses - Fused disconnects with current limiting fuses will be installed on the 480V station service transformers secondaries to reduce arc flash risk. This will include constructing new concrete pads to mount the disconnects adjacent to the existing transformers.

- HVOS Upgrade - The existing Hydraulic Valve Operating System (HVOS) Motor Control Center (MCC) and control panel was originally installed in 1987 and will be replaced in order to improve safety, troubleshooting, and operability. All work will take place within existing structures.

The objective of the project is to reduce the risk of an unplanned event that could result in an occupational injury (electrical arc flash); asset damage (pump motor failure) or pumping plant shutdown (HVOS controls systems failure).

2. ZONE BENEFITS

The proposed Project work will benefit the customers of Zone W-2 (North County), Zones W- 5, and W-7 (South County).

3. PROJECT RIGHT OF WAY

The proposed Project would be constructed on District property. The Project would require a permit from the United States Bureau of Reclamation (USBR).

4. MAPS AND FIGURES

Figure 1 - Project Location Map

5. PROJECT COSTS

The estimated cost to design and construct the proposed Project is $550,000 (2020 dollars). The proposed Project would be funded by the Water Enterprise Fund; 7.7% cost will be allocated to Zone W-5 (South County), 9.3% cost will be allocated to Zone W-7 (South County) and the remaining 83% will be funded by Zone W-2 (North County).

6. PROJECT SCHEDULE

- Advertise for construction bids: Q4 FY2021
- Award construction contract: Q1 FY2022
- Complete construction: Q3 FY2022

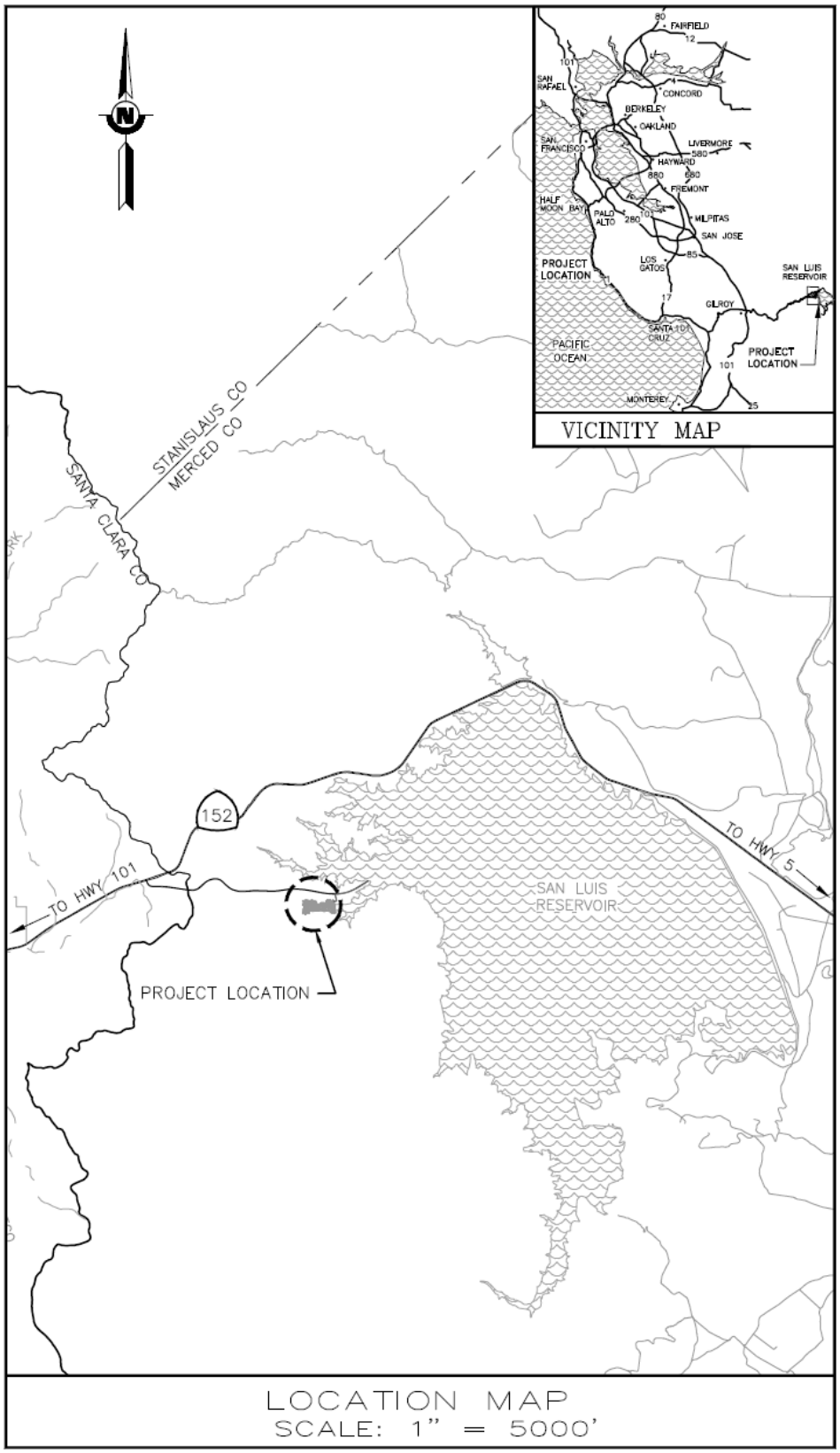

Figure 1 - Project Location Map

THIS PAGE INTENTIONALLY LEFT BLANK

Public Hearing Notice

SMALL CAPITAL IMPROVEMENT PROJECT

Topic: **Small Capital Improvement Project:** Pacheco Pumping Plant Electrical Current Limiting Fuse & Hydraulic Valve Operating System (HVOS) Upgrades Project

Who: Santa Clara Valley Water District

What: Public hearing on Engineer's Report and CEQA Exemption Determination

When: Tuesday, February 9, 2021, 1:00 p.m.

Where: Teleconference Zoom

Why: The Santa Clara Valley Water District invites you to a meeting regarding the Pacheco Pumping Plant Electrical Current Limiting Fuse & HVOS Upgrades Project. The proposed works of improvement are described in the Engineer's Report for Pacheco Pumping Plant Electrical System Upgrade. The Report is available on the water district's website: *http://www.valleywater.org/PublicReviewDocuments.aspx* A copy of this Notice has been posted outside Valley Water's Offices at 5700 Almaden Expressway, San Jose, CA 95118.

In compliance with the State Emergency Services Act, the Governor's Emergency Declaration related to the COVID-19 pandemic, the Governor's Executive Order N-29-20, and Order of the County of Santa Clara Public Health Officer dated March 16, 2020, Valley Water's offices are closed to the public. Therefore, the Engineer's Report is unavailable for public inspection at Valley Water's offices and only available online.

The Small Capital Improvement Project: Pacheco Pumping Plant Electrical Upgrade System Improvements will install current limiting fuses and upgrade the existing hydraulic valve operating system in the Motor Control Center at the Pacheco Pumping Plant.

At the time and place fixed for the public hearing, the Board of Directors will receive comments on the Engineer's Report and the CEQA exemption determination for the Project and consider approving the Project's CEQA exemption determination in accordance with the California Environmental Quality Act. After considering the comments on the Engineer's Repot, the Board will decide whether or not to proceed with the Project.

For more information about this hearing or this project, contact Rolando Bueno at (408) 630-2037 and/or Todd Inman at (408) 630-3167.

IMPORTANT NOTICES This meeting is being held in accordance with the Brown Act as currently in effect under the State Emergency Services Act, the Governor's Emergency Declaration related to COVID-19, and the Governor's Executive Order N-29-20 issued on March 17, 2020 that allows attendance by members of the Board of Directors, District staff, and the public to participate and conduct the meeting by teleconference, videoconference, or both.

Members of the public wishing to address the Board during a video conference meeting on this item listed on the agenda, should use the "Raise Hand" or "Chat" tools located in Zoom meeting link listed on the agenda. Speakers will be acknowledged by the Board Chair in the order requests are received and granted speaking access to address the Board.

Santa Clara Valley Water District (District), in complying with the Americans with Disabilities Act (ADA), requests individuals who require special accommodations to access and/or participate in District Board meetings to please contact the Clerk of the Board's office at (408) 630-2711, at least 3 business days before the scheduled District Board meeting to ensure that the District may assist you.

Se realizarán esfuerzos a fin de brindar todas las facilidades posibles a las personas con descapacidades que desean asistir a esta reunión pública. Para información adicional sobre como asistir a esta audiencia incluyendo peticiones para acomodar a descapacitados

o asistencia con intérpretes, por favor comuníquese a la Oficina del Secretario de la Junta Directiva al (408) 630-2277, por lo menos tres días antes de la audiencia.

Những người khuyết tật cũng có thể tham dự buổi điều trần này. Muốn có các yêu cầu hỗ trợ người khuyết tật tham dự buổi điều trần kể cả các tiện nghi, thông dịch, quý vị có thể tiếp xúc văn phòng Thư ký Hội đồng tại số (408) 630-2277, ít nhất ba ngày trước buổi điều trần.

Santa Clara Valley Water District

File No.: 21-0110

Agenda Date: 1/26/2021
Item No.: *3.2.

BOARD AGENDA MEMORANDUM

SUBJECT:
Adopt Plans and Specifications and Authorize Advertisement for Bids for the Lower Calera Creek Flood Protection Project, Project No. 40174005, Contract No. C0666 (Milpitas) (District 3).

RECOMMENDATION:

A. Adopt Plans and Specifications and Authorize Advertisement for Bids for the Lower Calera Creek Flood Protection Project, per the Notice to Bidders; and
B. Authorize the Designated Engineer to issue addenda, as necessary, during the bidding process.

SUMMARY:
The objective of the Lower Calera Creek Flood Protection Project (Project) is to provide flood protection to the surrounding area from a 1-percent flood event. This Project is part of the Lower Berryessa Creek flood protection improvements in the City of Milpitas. The Project entails constructing new floodwalls with architectural treatment, headwalls, maintenance roads, wetland and landscape plants for mitigation, and three-year plant establishment and maintenance phase.

Staff is recommending the Board approve the Project's final plans and specifications and authorize staff to advertise for construction bids.

Project Background

The Lower Berryessa Creek Project, which extends approximately 1.6 miles from its confluence with Lower Penitencia Creek upstream to Calaveras Boulevard, is part of a number of flood protection improvements within the City of Milpitas (Attachment 1). This Project will protect the surrounding area by removing approximately 1,800 parcels from the 1-percent floodplain and provide improved maintenance access to the channel. Construction of the Lower Berryessa Creek Project is being undertaken in 2 phases.

Phase 1 was completed in December 2016 and included improvements from the Lower Penitencia Creek confluence up to Abel Street. Phase 2 includes the segment along Lower Berryessa Creek between Abel Street and Calaveras Boulevard and a segment of Calera Creek from the Union Pacific Railroad that spans to about 880 feet upstream of Arizona Avenue (i.e. Lower Calera Creek). The civil construction work for the Phase 2 portion of Lower Berryessa Creek was completed in July 2020.

The Lower Calera Creek Flood Protection Project is the last element of Phase 2. Construction of the Project is anticipated to take two construction seasons with civil work estimated to be completed by December 2022, to be followed by a three-year plant establishment and maintenance phase.

Permits

Staff have obtained all required regulatory permits for construction of the Project from the San Francisco Bay Regional Water Quality Control Board (Section 401 Water Quality Certification), the U.S. Army Corps of Engineers (Section 404 of the Clean Water Act), and the California Department of Fish and Wildlife Services (Lake or Streambed Alteration Agreement). A construction access permit from the Santa Clara Valley Transportation Authority was also issued for work near the railroad corridor. Contractor-obtained permits necessary for work within City of Milpitas right of way are described in and required by the Contract Documents.

Board Adoption of Plans and Specifications and Addenda Authorization

Board adoption of plans and specifications and Board authorization to advertise is needed to proceed to bid the Project for construction. Authorizing the Designated Engineer to issue addenda during the bidding allows for modifications to the construction contract documents, if necessary, during the bidding period and before the contract is awarded.

Relevant Prior Board Action(s)

On December 13, 2011, the Board adopted a resolution adopting the Final EIR for the Lower Berryessa Creek and Lower Calera Creek improvements, the Mitigation Monitoring and Reporting Program, and approved the Project.

Outreach to Bidders

As part of the District's customary small and local business outreach, the following routine steps will be taken: 1) the Notice to Bidders (Attachment 2) will be sent to minority business Chambers of Commerce and small business groups; 2) the Notice will be sent to certified small business contractors and local and regional firms that have the appropriate license for this type of work; and 3) the Notice will be provided to the Santa Clara and San Benito Counties Building and Construction Trades Council, which maintains contacts with at least 500 contractors and 70 union representatives, for distribution to their members.

Next Steps

If the Board approves the recommendations, staff will proceed to advertise for bids for Project construction. The next Board action is award of the construction contract, tentatively scheduled for March 23, 2021. Project Delivery Process (Attachment 3) highlights the current Project phase and the staff recommendations before the Board.

FINANCIAL IMPACT:

The Berryessa Creek, Lower Penitencia Creek to Calaveras Blvd. Phase 2, Project No. 40174005 is included in the Five-Year Capital Improvement Program FY 2021-2025. The estimated construction contract cost of the Project is approximately $18.9 million to $24.2 million, and a budget adjustment for approximately $10.6 million will be forthcoming with the Midyear Budget agenda memo to the Board in January/February 2021. Construction costs encumbered for this Project will be phased over two years. With approval of the budget adjustment, the Project will have adequate funding in the FY21 budget to encumber a portion of the construction contract.

CEQA:

Valley Water is the lead agency under the California Environmental Quality Act for the implementation of the Project. On December 12, 2011, the Board adopted a resolution adopting the Final EIR and Mitigation Monitoring and Reporting Program and approved the Project. On October 2018, staff completed the First Addendum to the Lower Berryessa Creek Program Final Environmental Impact Report to address design changes along Lower Calera Creek. In December 2020, staff completed a Categorical Exemption for the Lower Berryessa Creek Trail Paving work that will be completed for Milpitas under this Project.

ATTACHMENTS:
Attachment 1: Map
Attachment 2: Notice to Bidders
Attachment 3: Project Delivery Process Chart
Attachment 4: Plans
Attachment 5: Specifications
*Handout 3.2-A: Revised Notice to Bidders Pg 5

UNCLASSIFIED MANAGER:
Rechelle Blank, 408-630-2632

THIS PAGE INTENTIONALLY LEFT BLANK

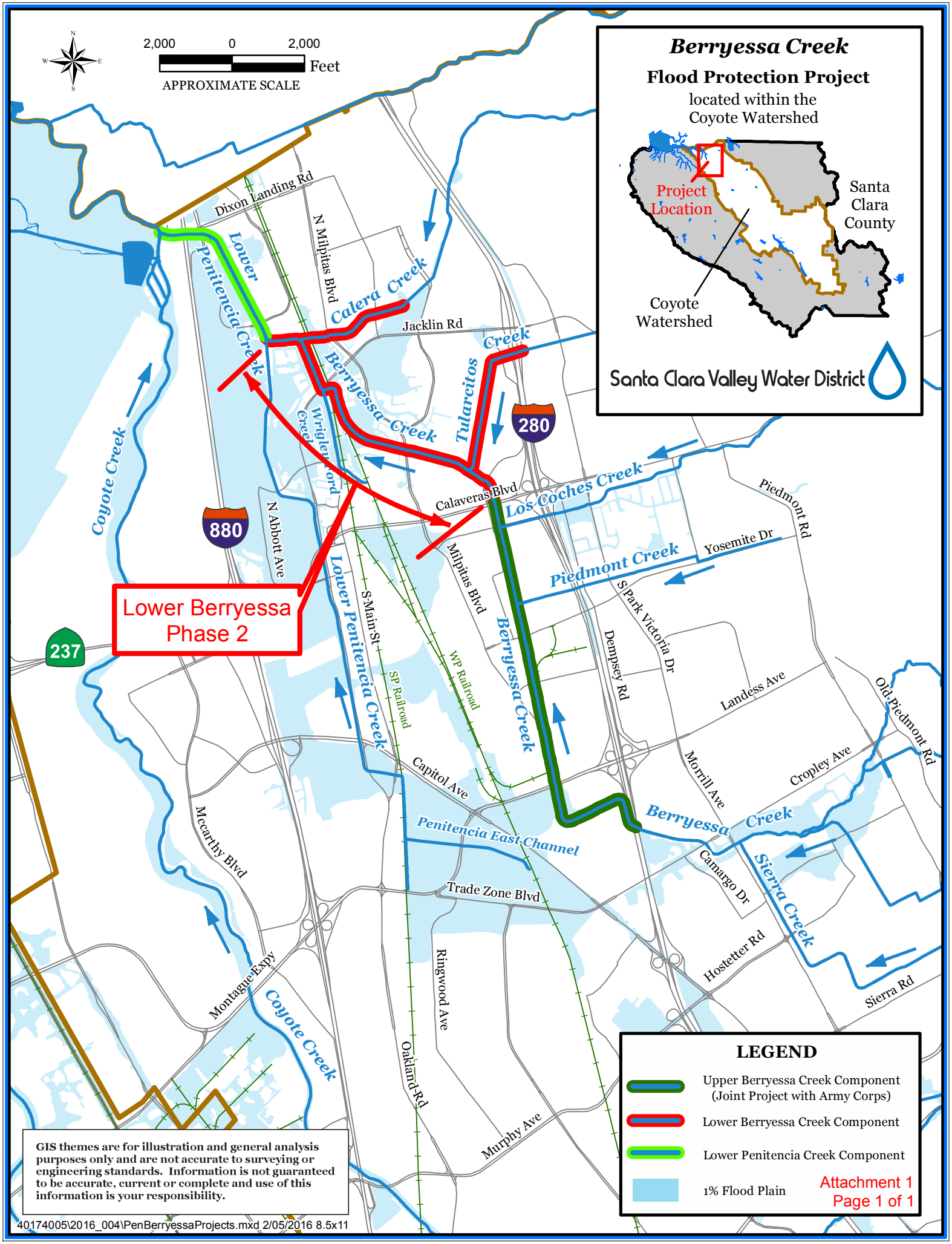

Attachment 1
Page 1 of 1

THIS PAGE INTENTIONALLY LEFT BLANK

LOWER CALERA CREEK FLOOD PROTECTION PROJECT

Project No. 40174005

Contract No. C0666

1. **Notice**. **Due to the County of Santa Clara Public Health Officer's Order, the Santa Clara Valley Water District offices remain closed to the public until further notice**. Notice is hereby given that sealed Bids will be received by the Construction Program of the Santa Clara Valley Water District (District), delivered either by a third party carrier such as FED EX, UPS, DHL, Overnight, Golden State Overnight, etc. or by hand delivery, at the District's Winfield Warehouse Building located at 5905 Winfield Boulevard, an Jose, California 95123-2428 only between the hours of 1:00 p.m. to 2:00 p.m. on **Wednesday, March 3, 2021**, for furnishing all material and performing all work necessary for construction of the Lower Calera Creek Flood Protection Project, in Milpitas, California. **NO BIDS WILL BE ACCEPTED VIA USPS (US MAIL)**. Additional information and Instructions to Bidders are posted on the District's Construction Administration webpage: https://www.valleywater.org/construction.

2. **California State Department of Industrial Relations Contractor and Subcontractor Registration Requirements**.
California Labor Code Section 1771.1 requires:
A contractor or subcontractor shall not be qualified to bid on, be listed in a bid proposal, subject to the requirements of Section 4104 of the Public Contract Code, or engage in the performance of any contract for public work, unless currently registered and qualified to perform public work pursuant to Section 1725.5 of the California Labor Code.
An inadvertent error in listing a subcontractor who is not registered pursuant to Section 1725.5 in a bid proposal shall not be grounds for filing a bid protest or grounds for considering the bid nonresponsive, provided that any of the following apply:

   A. The subcontractor is registered prior to the bid opening.

   B. Within 24 hours after the bid opening, the subcontractor is registered and has paid the penalty registration fee.

   C. The subcontractor is replaced by another registered subcontractor pursuant to Section 4107 of the Public Contract Code.

3. Summary of Work

A. Project Description. The Project scope includes the following:

1. Compliance with NPDES General Permit, including Storm Water Pollution Prevention Plan preparation, installation, and monitoring of BMP's;

2. Compliance with the Project regulatory permits including the Lake or Streambed Alteration Agreement (CDFW), the Waste Discharge Requirements (SFBRWQCB), US Army Corps of Engineers permits, the State Water Resources (NPDES General Permit), and local and municipal permits;

3. Construction site reviews and site conditions monitoring;

4. Develop Contractor's quality control program and implement quality control for the Project;

5. Development of a Site-Specific Work Plan for Santa Clara Valley Transportation Authority (VTA) / Bay Area Rapid Transit (BART) and adherence to the approved permit conditions;

6. Conduct noise and vibration monitoring generated from construction activities;

7. Develop a traffic control and, upon approval by the City of Milpitas, implement traffic control for the Project;

8. Clearing and grubbing within the Project limits including removal of trees, and other site vegetation (including existing wetland and riparian species);

9. Demolition of existing driveway access, sidewalk, curb & gutter, sacked concrete, channel concrete lining, concrete floodwalls, concrete foundations, rock riprap protection, utility lines, chain link fence, and other miscellaneous items shown on the Drawings;

10. Design and implement control of water; including proper diversion of upstream drainage and channel flows, diversion of downstream tidal flows, maintaining a dry foundation excavation, and proper handling and disposal of groundwater flows that are required during construction;

11. Design and install a shoring or lateral restraint system for the existing north concrete U-frame wall and other locations shown in the Drawings;

12. Excavation, testing, and disposal of surplus levee and channel materials;

13. Levee construction, including excavation, raising, testing, and placement of materials;

14. Installation of asphalt concrete surface trails, aggregate base maintenance roads and maintenance access, resurfacing of existing aggregate base maintenance roads;

15. Installation of rock riprap slope protection at bridge transitions, and storm drain outfalls;

16. Replacement of existing sidewalk, driveway, curb and gutter in accordance with the City of Milpitas standard details;

17. Construct cast-in-place reinforced concrete retaining walls at maintenance road ramps;

18. Construct cast-in-place reinforced concrete U-frame walls and floodwalls;

19. Install surface texturing to concrete floodwalls and headwalls with decorative patterns as shown on the Drawings;

20. Construct new headwalls at the VTA/BART railroad, North Milpitas Boulevard, and Arizona Avenue bridge locations;

21. Perform potholing as shown on the Drawings for protection of existing utilities within and immediately adjacent to the Project limits;

22. Install storm drain pipes, catch basins, outfall, check valves, flap gates and modify existing storm drain outfalls to conform to the new floodwalls and earthen slopes;

23. Install chain link fence and maintenance road gates;

24. Furnish and install a new flood gate;

25. Furnish and install hydroseed and erosion control blanket as shown on the Drawings;

26. Relocation of the existing Comcast communication cables at North Milpitas Boulevard to a below ground facility as shown on the Drawings;

27. Protect existing residential fences during construction of and associated elements of the floodwalls and levees included in the Drawings;

28. Install wetland and landscape plantings, followed by implementation of the three-year plant establishment maintenance period;

29. Perform other miscellaneous construction work and items necessary to complete the work included in the Drawings and Specifications.

B. Milestone Completion

1. Milestone 1: Complete all civil, special structures, planting and all work within the new channel (property line to property line) shown in the Drawings and provided in the Specifications by December 31, 2022.

   a. Milestone 1a: Complete all civil special structures, planting and all work within the new channel (property line to property line) shown between N. Milpitas Boulevard (E-line Sta 18+50) and the upstream limits of the Project (E-line Sta 41+30) at the end of the first year of construction or December 31, 2021.

   b. Milestone 1b: Complete all remaining civil, special structures, planting and all work within the new channel (property line to property line) shown between N. Milpitas Boulevard (E-line Sta 18+50) and the downstream limits of the Project (E-line Sta 13+00) at the end of the second year of construction or December 31, 2022.

2. Milestone 2: Complete the three-year planting establishment and maintenance period set forth in Section 32 of the Specifications.

3. The Contractor shall complete Milestone 1 before the expiration of 620 Days from the first chargeable Day of the Contract.

4. The Contractor shall complete Milestone 2 before the expiration of 1,720 Days from the first chargeable Day of the Contract (Project Completion).

C. **Sole Source Products**. None.

4. **Contract Time**. Time limit for the completion of the Work is **1,720** calendar days. See Contract Documents, Special Provisions, Article 12.03. Contract Time(s) for Milestones and Contract Times.

5. **Liquidated Damages**. See Standard Provisions, Liquidated Damages, Article 5.07 and Special Provisions, Liquidated Damages, Article 12.05 of the Contract Documents for requirements regarding Liquidated Damages.

6. **Estimated Cost**. The estimated cost of the Project is $18.9 million to $24.2 million. This estimate is intended to serve merely as an indication of the magnitude of the Work. Neither the Bidder(s) nor the Contractor will be entitled to pursue a claim or be compensated due to variance in the stated estimated cost range.

A. **Additive/Deductive Bid Items**. **[NOT USED]**.

B. **Supplemental Bid Items.** These bid items may or may not be required. They may be deleted entirely or in part, by deductive change order(s), at the sole discretion of the District. The sum of the Total Base Bid and the Total Supplemental Bid will be used to determine the lowest Bid price.

7. **Contractor's License Requirement**. The Bidder must possess a current **Class A** Contractor's license issued by the California Department of Consumer affairs, Contractor's State License Board when the Bid is submitted. Regardless of whether a subcontractor must be identified at the time of Bid, each subcontractor must also be properly licensed to perform its scope of Work.

8. **Pre-Bid Conference and Site Visit**. A Pre-Bid conference/site visit will be conducted by the District on **Wednesday, February 3, 2021**. The conference will convene at 10:00 a.m. (Pacific Standard Time), at North-West corner of North Milpitas Blvd and Hanson Court in Milpitas, CA 95035. Attendance at the Pre-Bid conference/site visit by subcontractors is not required.
Attendance by the Bidder at the Pre-Bid conference/site visit is:

☐ Mandatory
☒ Optional

The objective of the Pre-Bid conference/site visit is to familiarize prospective Bidders with the site; no additional site visits will be allowed. Please confirm your intent to attend the Pre-Bid conference/site visit 24 hours in advance by sending an email to scvwdplanroom@valleywater.org. Additional information regarding the Pre-Bid conference/site showing will be sent to all prospective Bidders who confirm their intention to attend.

In response to the COVID-19 pandemic, the District will require that all participants adhere to the orders of Social Distancing. All persons attending the Pre-Bid conference/site visit are required to adhere to the orders of Social Distancing and are also required to bring and wear the appropriate Personal Protection Equipment (PPE), i.e., protective face covering, in order to be allowed entrance onto the site and to remain on the site.

Reasonable efforts will be made to accommodate persons with disabilities wishing to attend the Pre-Bid conference/site visit. Please request accommodations when confirming attendance.

9. **Availability of Bid Documents**

Due to the County of Santa Clara Public Health Officer's Order, District offices will remain closed to the public until further notice. The Contract Documents are only available in electronic (PDF) format. The electronic version is free and will be transferred via file transfer appliance (FTA) site.

To Request Electronic Contract Documents:

Request Form and information available online:

- Website: https://www.valleywater.org/construction
- Email: scvwdplanroom@valleywater.org

10. **Inquiries**. The Bidder must submit all requests for clarification, or interpretation of the Bid Documents in accordance with the requirements stated in Instructions to Bidders, paragraph #7. Questions During Bidding. Written questions must be directed to the Contracts Administrator at scvwdplanroom@valleywater.org and submitted at least nine (9) calendar days before the deadline for receipt of Bids.

The District may issue written Addenda as appropriate for clarification or other purposes during the bidding period. Addendum notification(s) will be sent to each planholder at the email address provided by the contractor for the planholders list and addenda will be posted on the District's website at https://www.valleywater.org/construction.

A. **Project Manager**. The District's project manager for this Project is Javier Valencia.

B. **Process Questions**. For questions regarding the bid process, please contact the District Plan Room by email at scvwdplanroom@valleywater.org.

11. **Prevailing Wage Requirements**

A. Workers employed on this Project must be paid at rates at least equal to the prevailing wage rates as determined by the State of California Department of Industrial Relations pursuant to Section 1770 *et seq.* of the Labor Code. Said wage rates are incorporated herein by reference and are available on the State of California Department of Industrial Relations website at: http://www.dir.ca.gov/. See Standard Provisions, Prevailing Wages Article 4.04. through Apprentices Article 4.06. for related requirements.

Due to the County of Santa Clara Public Health Officer's Order, District offices will remain closed to the public until further notice. The wage rates are therefore not currently available for review at District offices.

B. This Project is subject to compliance monitoring and enforcement by the State of California Department of Industrial Relations. The Contractor and subcontractors must furnish the records specified in Section 1776 directly to the Labor Commissioner, in the following manner: monthly, in a format prescribed by the Labor Commissioner.

12. **Bid Proposal Submittal**. All Bids must be submitted in sealed envelopes addressed to the Santa Clara Valley Water District. Attention: Construction Programs and state the Project name and Project number on the outside of the sealed envelope. Each Bid must

be submitted on the prescribed Bid Forms. All information on Bid Forms must be completed in ink.

A. **Bid Submittal Delivery**. Bidders are allowed to submit a bid proposal by third party carrier or by hand delivery.

THIRD PARTY CARRIER such as: FEDEX, UPS, DHL, CA Overnight, Golden State Overnight, etc., and must address the submittal in accordance with instructions stated in this paragraph 12. Any Proposal received after 2 p.m. will not be considered. Late Bids will be returned unopened.

HAND DELIVERY shall only be between the hours of 1:00 p.m. - 2:00 pm. on the bid due date, at the Winfield Warehouse located at 5905 Winfield Boulevard, San Jose, CA 95123. Upon entrance through the gate, turn left towards the warehouse building. Bid submittal shall be delivered at a drop off box, marked "Bid/Submittal Drop Box," located in front of the warehouse entrance door. Each Bidder must take a picture using its cellphone showing the "Official Bid Clock" timer as proof of delivery. Bidders must observe all Public Health Officers orders and wear proper face covering when dropping off your Bid.

Any Proposal received after 2 p.m. will not be considered. Late Bids will be returned unopened.

NO BIDS WILL BE ACCEPTED VIA USPS (US MAIL). USPS (US Mail) does not deliver to 5905 Winfield Boulevard.

Address the outside delivery envelope as follows:

Santa Clara Valley Water District
Attention: Construction Program
C0666 – Lower Calera Flood Protection Project
5905 Winfield Boulevard
San Jose, CA 95123-2428

13. **Bid Opening**. For the duration of the COVID-19 pandemic, to ensure the safety of the public and District employees and requisite social distancing requirements by Order of the County of Santa Clara Public Health Officer, the opening of bids shall be made available to the public only by video teleconference, live-stream, on the date stated in this Notice to Bidders, paragraph #1. Notice, above, at **2:30 p.m.** The results will be posted on the District's website at https://www.valleywater.org/construction no later than the following day.

A. **Join Zoom Meeting**. Any person interested in attending the live-stream bid opening, may do so by accessing the link below, or join via phone by calling the toll-free number listed below:

Join Zoom Meeting: https://valleywater.zoom.us/j/3796054075

Meeting ID: 379 605 4075

One tap mobile:
+16699009128, 3796054075# US (San Jose)
+13462487799, 3796054075# US (Houston)

Dial by your location:
+1 669 900 9128 US (San Jose)
+1 346 248 7799 US (Houston)
+1 253 215 8782 US (Tacoma)
+1 646 558 8656 US (New York)
+1 301 715 8592 US (Germantown)
+1 312 626 6799 US (Chicago)

Meeting ID: 379 605 4075

Find your local number: https://valleywater.zoom.us/u/aekffBkBma

14. **Errors or Discrepancies in the Bids**. The District Board of Directors reserves the right to reject any and all Bid Proposals and to waive minor defects or irregularities in any submitted Bid Form(s).

15. **Bidder's Security**. Each Proposal must be accompanied by cash, a certified check, money order, cashier's check, or an original Bidder's bond in the sum of not less than 10 percent of the total aggregate of the Proposal including all additive and supplemental Bid items, if any. Said checks or bond must be made payable to the Santa Clara Valley Water District.

16. **Contract Retention**

☒ The Contract Retention for this Project is established at five (5) percent of the Contract Price.

☐ The Contract Retention for this Project is established at ten (10) percent of the Contract Price. The Board of Directors has made a finding that the Project is substantially complex and therefore requires retention higher than five percent.

17. **Substitution of Securities**. The Contractor may, at the Contractor's request and expense substitute securities equivalent to the amount withheld by District to ensure the performance of the contract, in accordance with Public Contract Code Section 22300.

18. **Small Business Preference. [NOT USED]**.

19. **Equal Opportunity**. The District is an equal opportunity employer and all Contractors of District projects are to have and follow a policy of equal opportunity including adherence to all state and federal laws and regulations, including the Federal Equal Opportunity Clause.

By order of the Board of Directors of the Santa Clara Valley Water District, San Jose, California, on Tuesday, January 26, 2021.

ATTEST: MICHELE L. KING, CMC

_____
Clerk, Board of Directors

THIS PAGE INTENTIONALLY LEFT BLANK

Project Delivery Process

Lower Calera Creek Flood Protection Project – Project No. 40174005

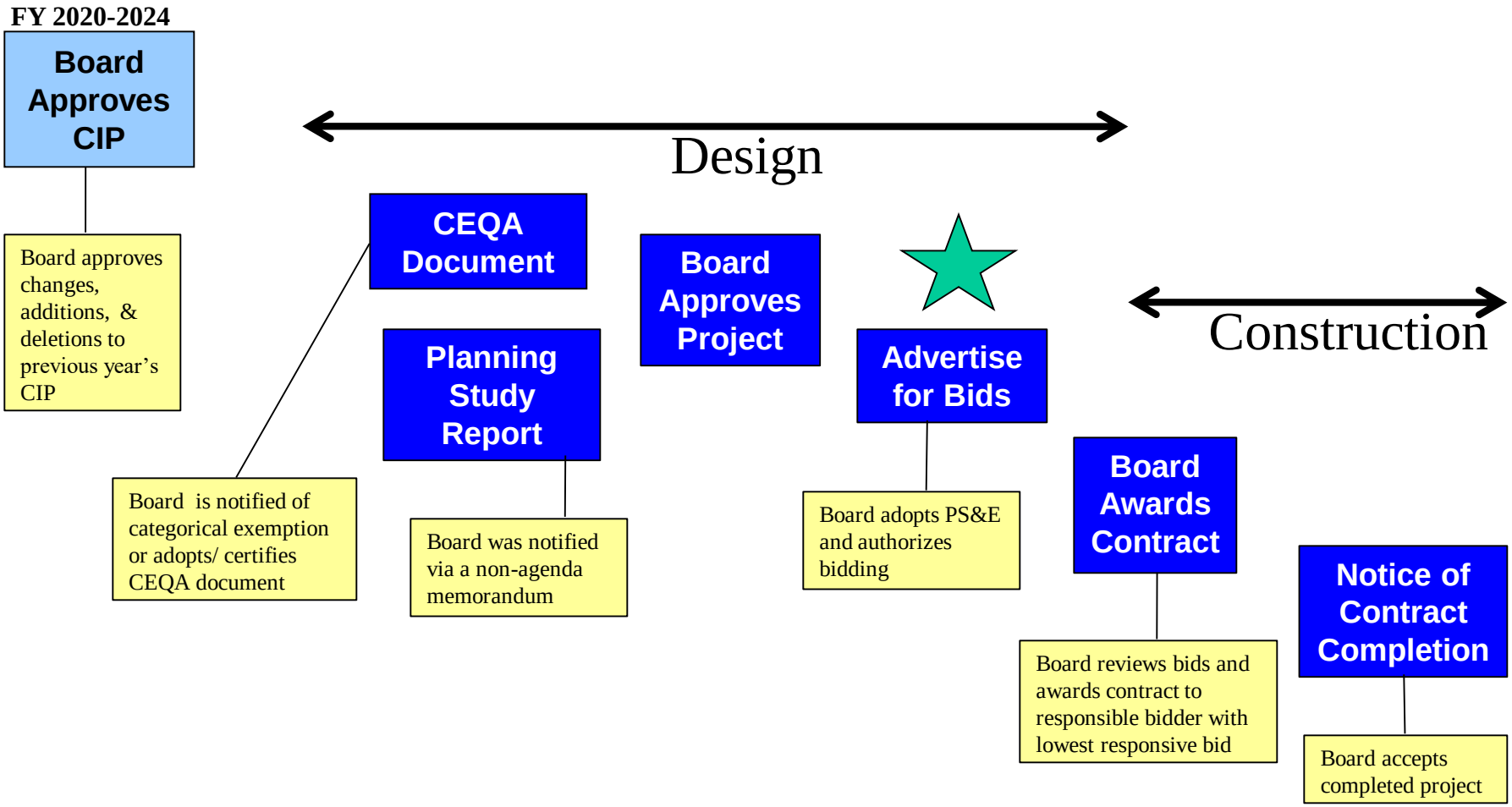

THIS PAGE INTENTIONALLY LEFT BLANK

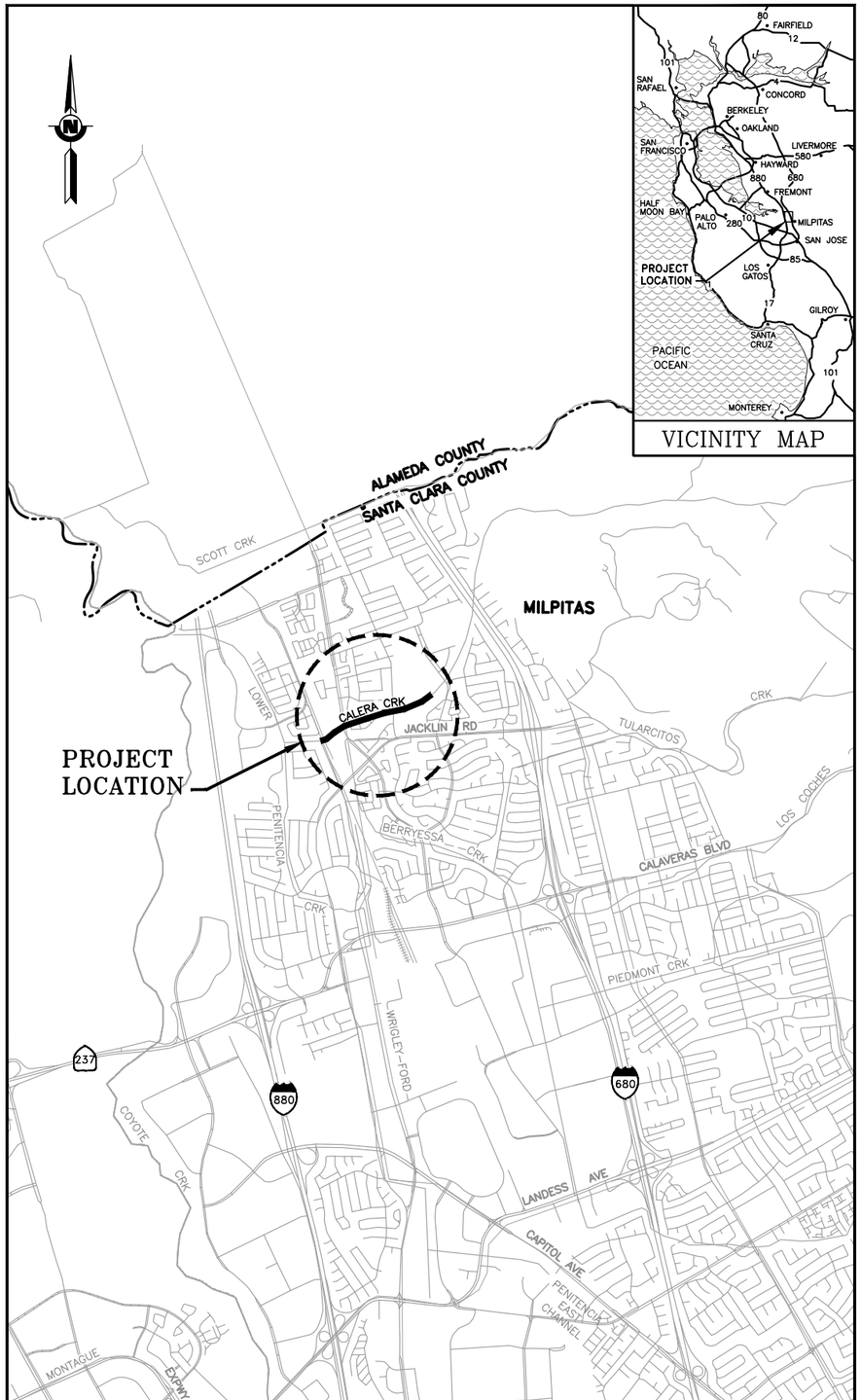

LOCATION MAP
SCALE: 1" = 2,000'

MAP AND CONSTRUCTION PLAN

FOR

LOWER CALERA CREEK FLOOD PROTECTION PROJECT

(U/S OF VTA BART TRACKS TO DROP STRUCTURE)

SANTA CLARA VALLEY WATER DISTRICT

Valley Water

APPROVED BY:

REGISTERED PROFESSIONAL ENGINEER KARL NEUMAN No. 62052 CIVIL STATE OF CALIFORNIA

Karl Neuman 12/30/2020

KARL NEUMAN, P.E. DATE
ENGINEERING UNIT MANAGER
DESIGN AND CONSTRUCTION UNIT 2

ACCEPTED BY:

Rechelle Blank 12/30/2020

RECHELLE BLANK, P.E. DATE
DEPUTY OPERATING OFFICER
WATERSHEDS DESIGN AND CONSTRUCTION DIVISION

CONTRACT NUMBER	C0666
PROJECT NUMBER	40174005
SHEET CODE:	G-01
SHEET NUMBER:	1 OF 144

Attachment 4
Page 1 of 144

USERNAME: Jennford 12/23/2020 3:56 PM
FILENAME: K:\Active Projects\MP-40174005\Lower Calera Creek Project\SHEETS\G-01.dwg
DOCUMENT NUMBER: CAE_CY-G-4018-65906

IN CHANNEL WORKING PERIODS	
DATE	STATION (E-LINE)
JUN 15 TO OCT 15	STA 13+00 TO 19+00
MAY 1 TO OCT 15	STA 19+00 TO 41+30

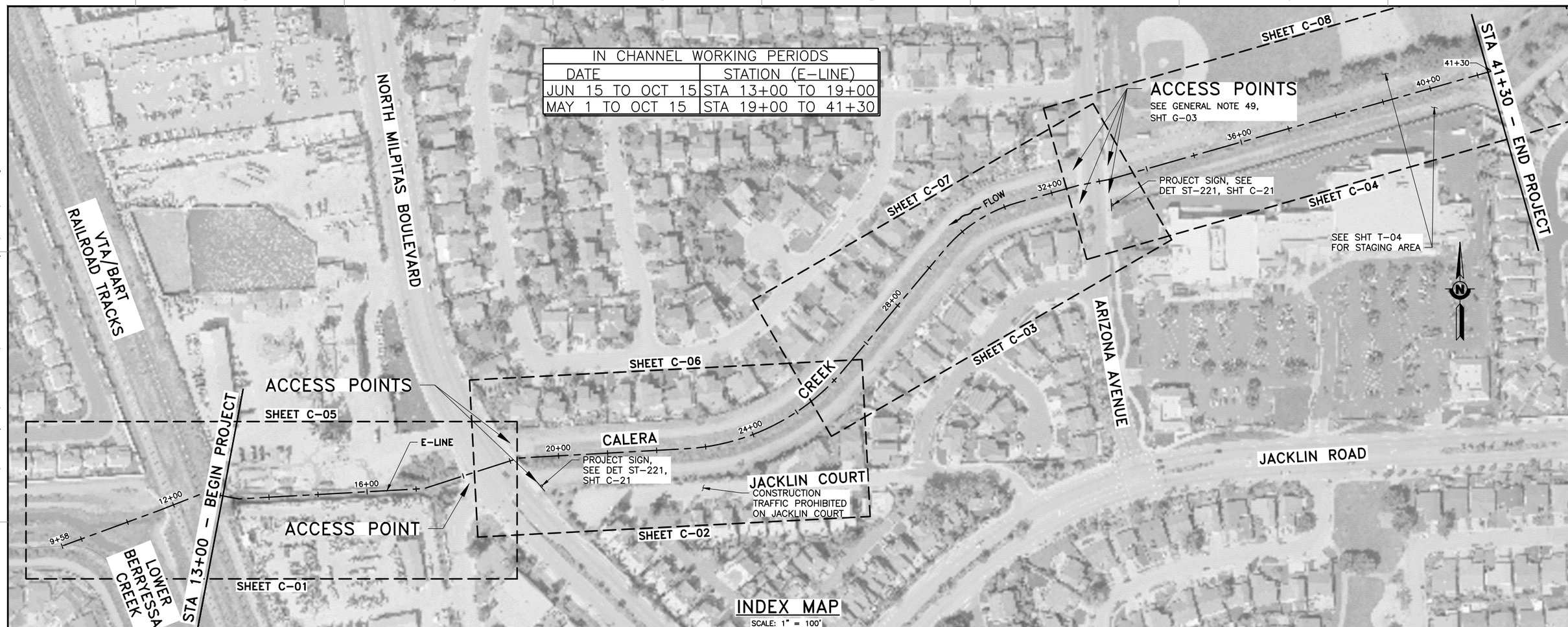

INDEX MAP
SCALE: 1" = 100'

DESIGN NOTES:

1. DISCHARGE CRITERIA:
   A. Q_{100} = 840 CFS AT NORTH MILPITAS BOULEVARD.
2. MANNINGS ROUGHNESS COEFFICIENT (N) IS:
   A. CONCRETE = 0.015
   B. LEVEE BANK AND LOWFLOW CHANNEL = 0.035
   C. PLANTING BENCH = 0.07
3. FREEBOARD CRITERIA:
   A. STANDARD: 3 FEET
   B. WITHIN 100 FEET OF BRIDGE: 4 FEET
4. UNIT STRESSES FOR REINFORCED CONCRETE ARE AS FOLLOWS:
   A. CONCRETE fc' = 4,000 PSI OR AS OTHERWISE SPECIFIED.
   B. STEEL fy = 60,000 PSI OR AS OTHERWISE SPECIFIED.
5. SURVEY DATA:
   HORIZONTAL DATUM: CALIFORNIA COORDINATE SYSTEM 83 ZONE III EPOCH 2004.082 [CCS83 (2004.082) ZONE III].
   VERTICAL DATUM: NORTH AMERICAN VERTICAL DATUM 88 (NAVD88). EPOCH MAY 1, 2007.
   UNITS OF MEASURE: U.S. SURVEY FEET.
   SURVEY CONTROL POINTS: SEE TABLE ON SHEET G-13.
6. SEE SHEETS G-09 THRU G-13 FOR SURVEY LAYOUT AND SURVEY LAYOUT DATA.

REV	DESCRIPTION	DATE	APPR

REFERENCE INFORMATION AND NOTES
1. AERIAL PHOTOGRAPHY WAS TAKEN APRIL, 2002.

DATE 12/30/2020
DESIGN Y. LEE
DRAWN M. KOST
CHECKED Y. LEE

ENGINEERING CERTIFICATION
REGISTERED PROFESSIONAL ENGINEER YOUHAN LEE No. C42456 CIVIL STATE OF CALIFORNIA
PROJECT ENGINEER 12.30.2020 DATE

SANTA CLARA VALLEY WATER DISTRICT
Valley Water

PROJECT NAME AND SHEET DESCRIPTION:
LOWER CALERA CREEK FLOOD PROTECTION PROJECT
INDEX MAP AND DESIGN NOTES

SCALE: AS SHOWN
VERIFY SCALES: 0 1" IF NOT ONE INCH ON ORIGINAL DRAWING IF NOT ONE INCH ON THIS SHEET, ADJUST SCALES ACCORDINGLY
PROJECT NUMBER: 40174005
SHEET CODE: G-02
SHEET NUMBER: 2 OF 144

DOCUMENT NUMBER: CAE_CY-G-4018-65907

USERNAME: Jennford 12/23/2020 3:56 PM
FILENAME: K:\Active Projects\MP-40174005\Lower Calera Creek Project\SHEETS\G-02.dwg

Attachment 4
Page 2 of 144

GENERAL NOTES:

1. ALL EXISTING FACILITIES, STRUCTURES, TREES, FENCES, LANDSCAPING, ETC., ARE TO REMAIN. ONLY THOSE SPECIFICALLY DESIGNATED FOR REMOVAL AS SHOWN ON THE DRAWINGS, OR AS DIRECTED BY THE ENGINEER SHALL BE REMOVED.
2. ALL REFERENCES MADE TO RIGHT OR LEFT AND ALL CROSS-SECTIONS SHOWN ON THE PLANS ARE VIEWED LOOKING UPSTREAM.
3. THE INDICATED LOCATIONS OF EXISTING UNDERGROUND FACILITIES ARE APPROXIMATE ONLY. CONTRACTOR SHALL POTHOLE AND FIELD VERIFY ALL EXISTING UTILITIES PRIOR TO COMMENCING WORK AND SHALL IMMEDIATELY NOTIFY THE ENGINEER OF ANY DISCREPANCIES WITH THE CONTRACT DOCUMENTS.
4. PRIOR TO PERFORMING ANY WORK IN THE VICINITY OF EXISTING UNDERGROUND UTILITIES, THE CONTRACTOR SHALL BE RESPONSIBLE TO IDENTIFY AND VERIFY THEIR LOCATION AND DEPTH AND TAKE PROPER PRECAUTIONS TO AVOID ANY DAMAGE TO THEM. CALL U.S.A. (UNDERGROUND SERVICE ALERT) 48 HOURS PRIOR TO COMMENCING WORK AT (800) 227-2600 FOR LOCATION. CONTRACTOR SHALL COMPLY WITH ALL APPLICABLE REGULATIONS PRIOR TO EXCAVATION.
5. THE CONTRACTOR SHALL SECURE THE SITE AND INSTALL TEMPORARY CONSTRUCTION FENCES AND OTHER WARNING SIGNS OR DEVICES AS REQUIRED. THE CONTRACTOR IS RESPONSIBLE FOR DETERMINING THE APPROPRIATE LOCATIONS OF ALL TEMPORARY CONSTRUCTION PROTECTION DEVICES.
6. THE CONTRACTOR SHALL COMPLY WITH THE REQUIREMENTS OF THE STATE WATER RESOURCES CONTROL BOARD FOR STORM WATER DISCHARGES ASSOCIATED WITH CONSTRUCTION ACTIVITIES.
7. THE CONTRACTOR SHALL NOTIFY VTA REPRESENTATIVES OF THE CONSTRUCTION CONTRACT AT LEAST 5 WORKING DAYS IN ADVANCE, PRIOR TO COMMENCING WITH ANY WORK WITHIN 25 FEET OF ANY VTA TRACK. ANY FLAG PERSONS OR OTHER SPECIAL PROTECTION AND SAFETY MEASURES PERFORMED BY VTA SHALL BE AT THE CONTRACTOR'S EXPENSE.
8. ALL TRAFFIC CONTROL DEVICES SUCH AS CONSTRUCTION SIGNS, BARRICADES, LIGHTS AND DELINEATORS SHALL BE FABRICATED IN ACCORDANCE WITH THE LATEST STATE OF CALIFORNIA, DEPT. OF TRANSPORTATION MANUAL ON UNIFORM TRAFFIC CONTROL DEVICES (MUTCD) AND THE MUTCD CALIFORNIA SUPPLEMENT. ALL CONE SPACING AND TAPER SPACING AND SIGN SPACING SHALL BE IN ACCORDANCE WITH THE MUTCD CALIFORNIA SUPPLEMENT.
9. SPECIAL SIGNS ARE IN 4" BLACK LETTERS ON ORANGE REFLECTIVE BACKGROUND. MOUNT SPECIAL SIGNS ON TYPE II BARRICADE.
10. FIRE HYDRANTS SHALL NOT BE OBSTRUCTED BY FENCE, EQUIPMENT, K-RAIL, OR TRAFFIC CONTROL DEVICES OF ANY KIND.
11. MAINTAIN 12' MINIMUM TRAFFIC LANES UNLESS OTHERWISE SPECIFIED OR APPROVED BY THE CITY OF MILPITAS.
12. KEEP DRIVEWAYS OPEN AT ALL TIMES.
13. CONTRACTOR SHALL NOT STORE, OPERATE OR HANDLE ANY EQUIPMENT OR MATERIALS WITHIN PRIVATE OR PUBLIC OWNED AREAS INCLUDING CITY STREETS UNLESS CONTRACTOR OBTAINS PRIOR APPROVAL FROM DESIGNATED OWNER(S).
14. PLATE OR BACKFILL HOLES AND EXCAVATIONS IN ROADWAYS AFTER WORK HOURS. STEEL PLATES TO BE COUNTERSUNK AND FLUSH WITH PAVEMENT. STEEL PLATE SHALL HAVE A NO-SKID SURFACE.
15. CONTRACTOR SHALL PROVIDE CERTIFIED FLAGGERS WHEN OPERATING AND HAULING EQUIPMENT AND MATERIALS WITHIN CITY STREETS IMMEDIATELY ADJACENT TO THE PROJECT.
16. REFER TO CITY OF MILPITAS WEB SITE FOR APPROVED TRUCK ROUTE MAP. CONTRACTOR IS RESPONSIBLE FOR OBTAINING APPROVAL FROM THE CITY OF MILPITAS FOR THEIR PROPOSED TRUCK ROUTE/HAUL PLAN FOR THE PROJECT. CONTRACTOR SHALL OBTAIN A CITY OF MILPITAS ENCROACHMENT PERMIT PRIOR TO STARTING WORK. CONTRACTOR SHALL NOT ACCESS PROJECT SITE OR ALLOW CONSTRUCTION TRAFFIC ON JACKLIN COURT.
17. PRIOR TO ACCESSING CITY STREETS FOR MOBILIZATION OF THE PROJECT, CONTRACTOR SHALL OBTAIN CITY ENCROACHMENT PERMIT AND SHALL COORDINATE WITH AND SUBMIT TO THE CITY A TRAFFIC CONTROL PLAN WHICH THE CITY MUST APPROVE WITH THEIR STAMPED CERTIFICATION.
18. NO WORK THAT INTERFERES WITH PUBLIC TRAFFIC SHALL BE PERFORMED BEFORE 9 AM OR AFTER 4 PM, UNLESS CONTRACTOR OBTAINS PRIOR APPROVAL FROM THE CITY. NO LANE CLOSURES OR ANY TRAFFIC CONTROL SHALL BE PERMITTED BEFORE 9AM OR AFTER 3PM UNLESS THE CONTRACTOR OBTAINS A WRITTEN APPROVAL FROM THE CITY PRIOR TO WORK.
19. CONTRACTOR SHALL INSTALL DIVERSION SYSTEM PRIOR TO WORK IN THE CHANNEL.
20. IT IS THE RESPONSIBILITY OF THE CONTRACTOR TO DETERMINE QUANTITIES OF ALL MATERIAL NEEDED.
21. ALL GROUND ELEVATIONS ARE APPROXIMATE ONLY AND SHALL BE FIELD VERIFIED BY CONTRACTOR.
22. ALL WORK BY CONTRACTOR SHALL BE RESTRICTED TO DESIGNATED LANDS OWNED BY THE DISTRICT FOR CONSTRUCTION OF THIS PROJECT AND IDENTIFIED EASEMENTS OR AGREEMENTS OBTAINED FOR THE PURPOSE OF THIS PROJECT.
23. AS SHOWN IN THE DRAWINGS, POWER AND CABLE UTILITIES ARE LOCATED NEAR THE CREEK ALIGNMENT. CONTRACTOR SHALL CONTACT THE OWNER OF EACH UTILITY AND DETERMINE ANY SPECIAL REQUIREMENTS FOR WORKING NEAR THE UTILITY. CONTRACTOR SHALL MEET ALL REQUIREMENTS OF EACH UTILITY OWNER AT THE EXPENSE OF CONTRACTOR.
24. CONTRACTOR SHALL PROVIDE ADEQUATE DUST AND NOISE CONTROL AT ALL TIMES AS REQUIRED BY SPECIFICATION 18.03.02 AND 18.05. CONTRACTOR SHALL BE RESPONSIBLE FOR COSTS DUE TO ANY VIOLATIONS.
25. CONTRACTOR SHALL EXERCISE ALL NECESSARY CAUTION TO AVOID DAMAGE TO ANY EXISTING FEATURES, INCLUDING BUT NOT LIMITED TO, SURVEY MONUMENTS, HOUSES, TREES, LANDSCAPING, IRRIGATION SYSTEMS, FENCES, BOLLARDS, SURFACE IMPROVEMENTS, EXISTING DRAINAGE STRUCTURES, WATER STRUCTURES, JUNCTION BOXES OR UNDERGROUND ELECTRIC, TELEPHONE, AND CABLE TV, STORM SEWER, SANITARY SEWER, WATER LINES, AND OTHER UNDERGROUND UTILITIES, WHICH ARE TO REMAIN IN PLACE, AT NO ADDITIONAL COST TO THE DISTRICT.
26. ENGINEER WILL OBSERVE ALL WORK FOR CONFORMANCE TO THE PLANS AND SPECIFICATIONS. CONTRACTOR SHALL NOTIFY ENGINEER 48 HOURS PRIOR TO GRADING CONSTRUCTION, FLOODWALL CONSTRUCTION, AND TESTING OF UTILITIES.
27. CONTRACTOR SHALL RESTORE OR REPLACE ANY DAMAGED SURVEY MONUMENTS RESULTING FROM THEIR OPERATION AND SHALL BEAR ALL COSTS OF SUCH REPLACEMENT, INCLUDING COST OF FILING A RECORD OF SURVEY WITH SANTA CLARA COUNTY. REPLACEMENT SHALL BE COMPLETED BY A LAND SURVEYOR REGISTERED BY THE STATE OF CALIFORNIA.
28. EXCAVATION SHORING IS REQUIRED IN THE LOCATIONS SHOWN IN THE DRAWINGS. CONTRACTOR SHALL PROVIDE ADEQUATE SHEETING, SHORING, BRACING, OR EQUIVALENT METHOD FOR THE PROTECTION OF LIFE OR LIMB, WHICH SHALL CONFORM TO THE APPLICABLE CONSTRUCTION SAFETY ORDERS OF THE DIVISION OF INDUSTRIAL SAFETY OF THE STATE OF CALIFORNIA AND ALL OSHA REQUIREMENTS. CONTRACTOR IS REQUIRED TO PREPARE AND SUBMIT A SHORING AND BRACING DESIGN STAMPED BY A PROFESSIONAL ENGINEER LICENSED IN CALIFORNIA. REFER TO SPECIFICATION 24.11 FOR ALL REQUIREMENTS.
29. CONTRACTOR IS RESPONSIBLE FOR MATCHING EXISTING GRADING AND DRIVEWAYS WITH A SMOOTH TRANSITION. LOW SPOTS CREATED FROM CONSTRUCTION SHALL BE GRADED TO DRAIN TO EXISTING DRAINAGE AREA.
30. CONTROL OF WATER MAY BE REQUIRED FOR ALL EXCAVATIONS. REFER TO GEOTECHNICAL REPORT, SPECIFICATIONS, AND DRAWINGS FOR ALL REQUIREMENTS, DISPOSAL AREAS, AND WATER QUALITY INFORMATION.
31. IF NESTING BIRDS ARE FOUND, A BUFFER SHALL BE ESTABLISHED AND MAINTAINED AROUND THE NEST UNTIL THE YOUNG HAVE FLEDGED. SEE SPECIFICATION 19.07.04 FOR APPROPRIATE BUFFER RADII. THE QUALIFIED BIOLOGIST MAY IDENTIFY AN ALTERNATE BUFFER BASED ON A SITE-SPECIFIC EVALUATION. NO WORK WITHIN THE BUFFER SHALL OCCUR WITHOUT WRITTEN APPROVAL FROM THE QUALIFIED BIOLOGIST FOR AS LONG AS THE NEST IS ACTIVE.
32. CONTRACTOR SHALL PROVIDE VIBRATION MONITORING AND CONTROL CONSTRUCTION RELATED VIBRATIONS AS REQUIRED BY SPECIFICATION 18.03.03.
33. CONTRACTOR SHALL PROVIDE PRE-CONSTRUCTION STRUCTURAL SURVEYS OF ALL NEARBY RESIDENCES AS REQUIRED BY SPECIFICATION 18.03.03.
34. IT IS UNACCEPTABLE TO IDLE DELIVERY TRUCKS FOR ANY REASON. REFER TO SPECIFICATION 18.07.02.
35. FULL COMPENSATION FOR COMPLYING WITH THESE NOTES AND OTHER NOTES ON THESE PLANS SHALL BE CONSIDERED AS INCLUDED IN THE PRICE PAID FOR VARIOUS CONTRACT ITEMS OR WORK, AND NO ADDITIONAL ALLOWANCE WILL BE MADE THEREFORE.
36. THE CITY'S PUBLIC WORKS INSPECTOR SHALL BE NOTIFIED A MINIMUM OF 48-HOURS PRIOR TO ANY WORK OR INSPECTION IN CITY'S RIGHT-OF-WAY, UTILITIES AND EASEMENTS.
37. CONTRACTOR SHALL COMPLY WITH THE CITY'S CONSTRUCTION NOISE ORDINANCE. WORK HOURS ARE BETWEEN 7AM TO 7 PM AND INSPECTION WORK HOURS ARE BETWEEN 7AM TO 4AM.
38. THE CONTRACTOR SHALL VIDEO ALL THE CITY'S WET UTILITIES CROSSING OR TERMINATING INTO CREEK PRIOR TO AND AFTER CONSTRUCTION TO RECORD THE CONDITION OF THE PIPE.
39. CONTRACTOR SHALL ARRANGE A FIELD MEETING WITH CITY'S PUBLIC WORKS INSPECTOR PRIOR TO EXCAVATION OR REMOVAL OF ANY CITY UTILITIES.
40. CONTRACTOR SHALL POTHOLE ALL UTILITIES PRIOR TO CONSTRUCTION AND SUBMIT INFORMATION TO THE CITY FOR REVIEW.
41. CONTRACTOR SHALL USE A STREET SWEEPER TO CLEAN CITY'S STREET TO REMOVE SEDIMENT TRACKING FROM SCVWD CONSTRUCTION ACTIVITIES.
42. CONTRACTOR SHALL BE HELD RESPONSIBLE FOR ANY DAMAGE TO CITY INFRASTRUCTURE AND SHALL REPAIR AND/OR REPLACE AT THE CONTRACTOR'S OWN EXPENSE TO THE SATISFACTION OF THE CITY ENGINEER.
43. CONTRACTOR SHALL ENSURE THAT ALL THE WORK IS IN COMPLIANCE WITH THE AMERICANS WITH DISABILITY ACT (ADA).
44. ALL EXISTING AND PROPOSED UTILITY BOXES MUST BE ADJUSTED TO GRADE.
45. ALL USA MARKINGS FROM THE PROJECT SHALL BE COMPLETELY REMOVED AT THE END OF CONSTRUCTION.
46. IF THERE IS NEED FOR CONSTRUCTION WATER, CONTRACTOR SHALL APPLY FOR A CITY CONSTRUCTION RECYCLED OR POTABLE WATER METER AT THE CITY HALL PRIOR TO START OF WORK.
47. THE CONTRACTOR SHALL NOT DISCHARGE TO THE CITY'S SANITARY SEWER SYSTEM WITHOUT PRIOR APPROVAL FROM THE CITY. A DISCHARGE PERMIT IS REQUIRED FROM THE CITY OF MILPITAS ENVIRONMENTAL SERVICES DEPARTMENT.
48. CONTRACTOR SHALL NOTIFY CITY OF MILPITAS POLICE AND FIRE DEPARTMENTS 5 DAYS AND 48-HOURS PRIOR TO PLANNED CONSTRUCTION ACTIVITIES.
49. DUE TO HEAVY PEDESTRIAN USE OF THE SIDEWALK AND ROADWAYS AT THE ARIZONA AVE ACCESS POINTS DURING STUDENT DROP-OFF AND PICK-UP TIMES FROM MILPITAS HIGH SCHOOL. ADDITIONAL TRAFFIC CONTROL MAY BE REQUIRED. THE BELL SCHEDULE FOR MILPITAS HIGH SCHOOL CAN BE FOUND AT THE FOLLOWING LINK: HTTP://MHS.MUSD.ORG/ABOUT_MHS/BELL-SCHEDULE

REV	DESCRIPTION	DATE	APPR	REFERENCE INFORMATION AND NOTES
	Attachment 4 Page 3 of 144			

DATE 12/30/2020
DESIGN Y. LEE
DRAWN M. KOST
CHECKED Y. LEE

ENGINEERING CERTIFICATION
REGISTERED PROFESSIONAL ENGINEER YOUHAN LEE No. C42456 CIVIL STATE OF CALIFORNIA
PROJECT ENGINEER 12.30.2020 DATE

SANTA CLARA VALLEY WATER DISTRICT
Valley Water

PROJECT NAME AND SHEET DESCRIPTION:
LOWER CALERA CREEK
FLOOD PROTECTION PROJECT
GENERAL NOTES

SCALE AS SHOWN
VERIFY SCALES 0 1"
IF THIS LINE 1 INCH ON ORIGINAL DRAWING DOES NOT EQUAL 1 INCH ON THIS SHEET, ADJUST SCALES ACCORDINGLY

PROJECT NUMBER 40174005
SHEET CODE: G-03
SHEET NUMBER: 3 OF 144

Attachment 4
Page 3 of 144

USERNAME: Jennford 12/23/2020 3:56 PM
FILENAME: K:\Active Projects\MP-40174005\Lower Calera Creek Project\SHEETS\G-03.dwg
DOCUMENT NUMBER: CAE_CY-G-4018-65908

DRAWING INDEX

SHEET CODE	DESCRIPTION	SHEET NUMBER
	GENERAL	
G-01	LOCATION MAP AND TITLE SHEET	1 OF 144
G-02	INDEX MAP AND DESIGN NOTES	2 OF 144
G-03	GENERAL NOTES	3 OF 144
G-04	DRAWING INDEX	4 OF 144
G-05	ABBREVIATIONS, LEGEND AND SYMBOLS	5 OF 144
G-06	RIGHT-OF-WAY MAP	6 OF 144
G-07	RIGHT-OF-WAY MAP	7 OF 144
G-08	RIGHT-OF-WAY MAP	8 OF 144
G-09	SURVEY LAYOUT, E-LINE STA 13+00 TO 18+50, FW20-LINE STA 10+00 TO 14+89, AND FW21-LINE STA 10+31 TO 15+00	9 OF 144
G-10	SURVEY LAYOUT, E-LINE STA 18+50 TO 26+00, FW22-LINE STA 9+00 TO 16+62, AND FW24-LINE STA 10+00 TO 16+68	10 OF 144
G-11	SURVEY LAYOUT, E-LINE STA 26+00 TO 33+00, FW22-LINE STA 16+62 TO 23+00, AND FW24-LINE STA 16+68 TO 23+80	11 OF 144
G-12	SURVEY LAYOUT, E-LINE STA 33+00 TO 41+30, FW26-LINE STA 9+50 TO 15+00, AND FW29-LINE STA 9+80 TO 13+00	12 OF 144
G-13	SURVEY LAYOUT TABLES	13 OF 144
	AC PAVEMENT	
G-14	INDEX MAP II AND DESIGN NOTES	14 OF 144
G-15	RIGHT OF WAY MAP	15 OF 144
G-16	RIGHT OF WAY MAP	16 OF 144
G-17	RIGHT OF WAY MAP	17 OF 144
G-18	RIGHT OF WAY MAP	18 OF 144
G-19	RIGHT OF WAY MAP	19 OF 144
G-20	SURVEY LAYOUT, AC1-LINE STA 10+00 TO 18+46	20 OF 144
G-21	SURVEY LAYOUT, AC1-LINE STA 18+46 TO 29+36	21 OF 144
G-22	SURVEY LAYOUT, AC1-LINE STA 29+36 TO 39+52	22 OF 144
G-23	SURVEY LAYOUT, AC2-LINE STA 10+00 TO 12+99	23 OF 144
G-24	SURVEY LAYOUT, AC2-LINE STA 12+99 TO 13+98 AND AC3-LINE STA 10+00 TO 16+43	24 OF 144
G-25	SURVEY LAYOUT DATA	25 OF 144
G-26	SURVEY LAYOUT DATA	26 OF 144
	DEMOLITION	
D-01	DEMOLITION PLAN	27 OF 144
D-02	DEMOLITION PLAN	28 OF 144
D-03	DEMOLITION PLAN	29 OF 144
D-04	DEMOLITION PLAN	30 OF 144
D-05	DEMOLITION PLAN	31 OF 144
D-06	DEMOLITION PLAN	32 OF 144
	AC PAVEMENT	
D-07	DEMOLITION PLAN, AC1-LINE STA 10+00 TO STA 32+00	33 OF 144
D-08	DEMOLITION PLAN, AC1-LINE STA 32+00 TO STA 39+52, AC2-LINE STA 10+00 TO STA 13+98	34 OF 144
D-09	DEMOLITION PLAN, AC3-LINE STA 10+00 TO STA 16+43	35 OF 144
	CIVIL	
C-01	RIGHT BANK PLAN AND PROFILE, E-LINE STA 13+00 TO 18+50, FW21-LINE STA 10+03 TO 15+00	36 OF 144
C-02	RIGHT BANK PLAN AND PROFILE, E-LINE STA 18+50 TO 26+00, FW22-LINE STA 9+00 TO 16+62	37 OF 144
C-03	RIGHT BANK PLAN AND PROFILE, E-LINE STA 26+00 TO 33+00, FW22-LINE STA 16+62 TO 22+87	38 OF 144
C-04	RIGHT BANK PLAN AND PROFILE, E-LINE STA 33+00 TO 41+30, FW26-LINE 9+50 TO 15+00	39 OF 144
C-05	LEFT BANK PLAN AND PROFILE, FW20-LINE STA 10+00 TO 14+76	40 OF 144
C-06	LEFT BANK PLAN AND PROFILE, E-LINE STA 18+50 TO 26+00, FW24-LINE STA 10+00 TO 16+68	41 OF 144
C-07	LEFT BANK PLAN AND PROFILE, E-LINE STA 26+00 TO 33+00, FW24-LINE 16+68 TO 23+80	42 OF 144
C-08	LEFT BANK PLAN AND PROFILE, E-LINE STA 33+00 TO 41+30, FW29-LINE STA 9+80 TO 13+00	43 OF 144
C-09	RAMP PROFILES AND TABLES	44 OF 144
C-10	RAMP PROFILES AND TABLES	45 OF 144
C-11	RAMP PROFILES AND TABLES	46 OF 144
C-12	TYPICAL SECTIONS	47 OF 144
C-13	TYPICAL SECTIONS	48 OF 144
C-14	TYPICAL SECTIONS	49 OF 144
C-15	TYPICAL SECTIONS	50 OF 144
C-16	TYPICAL SECTIONS	51 OF 144
C-17	NORTH MILPITAS BOULEVARD CROSSING DETAIL	52 OF 144
C-18	ARIZONA AVENUE CROSSING DETAIL	53 OF 144
C-19	SECTIONS	54 OF 144
C-20	STORM DRAIN MODIFICATION DETAILS AND SECTIONS	55 OF 144
C-21	DETAILS	56 OF 144
C-22	TYPICAL SECTIONS	57 OF 144
C-23	TYPICAL SECTIONS	58 OF 144
C-24	DRIVEWAY, HANDICAP RAMP AND GRADING	59 OF 144
C-25	DRIVEWAY AND HANDICAP RAMP PROFILE AND SECTION	60 OF 144
C-26	DETAILS	61 OF 144
C-27	DETAILS	62 OF 144
	AC PAVEMENT	
C-28	PLAN AND PROFILE, AC1-LINE STA 10+00 TO STA 20+00	63 OF 144
C-29	PLAN AND PROFILE, AC1-LINE STA 20+00 TO STA 32+00	64 OF 144
C-30	PLAN AND PROFILE, AC1-LINE STA 32+00 TO STA 39+52	65 OF 144
C-31	PLAN AND PROFILE, AC2-LINE STA 10+00 TO STA 13+98	66 OF 144
C-32	PLAN AND PROFILE, AC3-LINE STA 10+00 TO STA 16+43	67 OF 144
C-33	LEVEE RAMP PROFILES AND TABLES	68 OF 144
C-34	LEVEE RAMP PROFILES AND TABLES	69 OF 144
C-35	MAINTENANCE ROAD AC PAVING DETAIL	70 OF 144
	UTILITIES	
U-01	VTA/BART TO NORTH MILPITAS BOULEVARD GRADING AND DRAINAGE	71 OF 144
U-02	NORTH MILPITAS BOULEVARD GRADING AND DRAINAGE	72 OF 144
U-03	ARIZONA AVENUE GRADING AND DRAINAGE	73 OF 144
U-04	ARIZONA AVENUE UPSTREAM GRADING AND DRAINAGE	74 OF 144
U-05	UTILITY RELOCATION DETAIL	75 OF 144
U-06	OVERHEAD POWER LINE SECTION, FW21-LINE STA 14+53±	76 OF 144
U-07	EXISTING POTHOLE LOCATION MAP	77 OF 144
U-08	EXISTING POTHOLE LOCATION MAP	78 OF 144
	STRUCTURAL	
S-01	GENERAL NOTES, STRUCTURAL INFORMATION	79 OF 144
S-02	LT BANK FLOODWALL FW NO. 1 GENERAL PLAN NO. 1	80 OF 144
S-03	LT BANK FLOODWALL FW NO. 1 GENERAL PLAN NO. 2	81 OF 144
S-04	RT BANK INBOARD FLOODWALL FW NO. 2 GENERAL PLAN NO. 1	82 OF 144
S-05	RT BANK INBOARD FLOODWALL FW NO. 2 GENERAL PLAN NO. 2	83 OF 144
S-06	RT BANK OUTBOARD FLOODWALL FW NO. 3 GENERAL PLAN NO. 1	84 OF 144
S-07	RT BANK OUTBOARD FLOODWALL FW NO. 3 GENERAL PLAN NO. 2	85 OF 144
S-08	RT BANK RAMP CURB GENERAL PLAN	86 OF 144
S-09	RETAINING WALL NO. 1 GENERAL PLAN	87 OF 144
S-10	FLOODWALL SECTIONS	88 OF 144
S-11	FLOODWALL TYPE A & C – DETAILS	89 OF 144
S-12	FLOODWALL TYPE B – DETAILS	90 OF 144
S-13	FLOODWALL TYPE D – DETAILS	91 OF 144
S-14	FLOODWALL DETAILS NO. 1	92 OF 144
S-15	FLOODWALL DETAILS NO. 2	93 OF 144
S-16	FLOODWALL DETAILS NO. 3	94 OF 144
S-17	CHAIN LINK RAILING	95 OF 144
S-18 TO S-40	SHEETS NOT USED	
S-41	GENERAL NOTES	96 OF 144
S-42	KEY PLAN	97 OF 144
S-43	HEADWALL GENERAL PLAN	98 OF 144
S-44	UPRR HEADWALL EXTENSIONS	99 OF 144
S-45	HEADWALL DETAILS NO. 1	100 OF 144
S-46	HEADWALL DETAILS NO. 2	101 OF 144
S-47	FLOODWALL PLAN NO. 1	102 OF 144
S-48	FLOODWALL PLAN NO. 2	103 OF 144
S-49	FLOODWALL PLAN NO. 3	104 OF 144
S-50	FLOODWALL PLAN NO. 4	105 OF 144
S-51	FLOODWALL ELEVATION NO. 1	106 OF 144
S-52	FLOODWALL ELEVATION NO. 2	107 OF 144
S-53	FLOODWALL ELEVATION NO. 3	108 OF 144
S-54	FLOODWALL ELEVATION NO. 4	109 OF 144
S-55	FLOODWALL ELEVATION NO. 5	110 OF 144
S-56	FLOODWALL ELEVATION NO. 6	111 OF 144
S-57	FLOODWALL ELEVATION NO. 7	112 OF 144
S-58	FLOODWALL ELEVATION NO. 8	113 OF 144
S-59	FLOODWALL DETAILS NO. 1	114 OF 144
S-60	FLOODWALL DETAILS NO. 2	115 OF 144
	LANDSCAPE	
L-01	TOPSOIL SALVAGE PLAN E-LINE STA 13+00 TO 18+50	116 OF 144
L-02	TOPSOIL SALVAGE PLAN E-LINE STA 18+50 TO 26+00	117 OF 144
L-03	TOPSOIL SALVAGE PLAN E-LINE STA 26+00 TO 33+00	118 OF 144
L-04	PLANTING SCHEDULE, NOTES AND LEGEND	119 OF 144
L-05	PLANTING PLAN E-LINE STA 13+00 TO 18+50	120 OF 144
L-06	PLANTING PLAN E-LINE STA 18+50 TO 26+00	121 OF 144
L-07	PLANTING PLAN E-LINE STA 26+00 TO 33+00	122 OF 144
L-08	PLANTING DETAILS	123 OF 144
L-09	PLANTING SCHEDULE, NOTES AND LEGEND	124 OF 144
L-10	PLANTING PLAN	125 OF 144
L-11	PLANTING DETAILS	126 OF 144
L-12	IRRIGATION PLAN	127 OF 144
L-13	IRRIGATION DETAILS	128 OF 144
L-14	ESTABLISHMENT MAINTENANCE	129 OF 144
L-15	ESTABLISHMENT MAINTENANCE	130 OF 144
	CROSS SECTIONS	
X-01	CROSS SECTIONS	131 OF 144
X-02	CROSS SECTIONS	132 OF 144
X-03	CROSS SECTIONS	133 OF 144
X-04	CROSS SECTIONS	134 OF 144
X-05	CROSS SECTIONS	135 OF 144
X-06	CROSS SECTIONS	136 OF 144
X-07	CROSS SECTIONS	137 OF 144
X-08	CROSS SECTIONS	138 OF 144
X-09	CROSS SECTIONS	139 OF 144
X-10	CROSS SECTIONS	140 OF 144
	TEMPORARY	
T-01	TEMPORARY SHORING WORK, E-LINE STA 13+00 TO 18+50	141 OF 144
T-02	TEMPORARY SHORING WORK, E-LINE STA 18+50 TO 26+00	142 OF 144
T-03	TEMPORARY SHORING WORK, E-LINE STA 26+00 TO 33+00	143 OF 144
T-04	TEMPORARY SHORING WORK, E-LINE STA 33+00 TO 41+30	144 OF 144

REV	DESCRIPTION	DATE	APPR	REFERENCE INFORMATION AND NOTES

DATE 12/30/2020
DESIGN Y. LEE
DRAWN M. KOST
CHECKED Y. LEE

ENGINEERING CERTIFICATION
REGISTERED PROFESSIONAL ENGINEER YOUHAN LEE No. C42456 CIVIL STATE OF CALIFORNIA
12.30.2020
PROJECT ENGINEER DATE

SANTA CLARA VALLEY WATER DISTRICT
Valley Water

PROJECT NAME AND SHEET DESCRIPTION:
LOWER CALERA CREEK
FLOOD PROTECTION PROJECT
DRAWING INDEX

SCALE AS SHOWN
VERIFY SCALES 0 1" IF NOT ONE INCH ON ORIGINAL DRAWING IF NOT ONE INCH ON THIS SHEET, ADJUST SCALES ACCORDINGLY

PROJECT NUMBER 40174005
SHEET CODE: G-04
SHEET NUMBER: 4 OF 144

DOCUMENT NUMBER: CAE_CY-G-4018-65909

USERNAME: Jennford 12/24/2020 8:06 AM
FILENAME: K:\Active Projects\MP-40174005\Lower Calera Creek Project\SHEETS\G-04.dwg

Attachment 4
Page 4 of 144

ABBREVIATIONS

AB – AGGREGATE BASE
ABM – AIR BLOWN MORTAR
ABS – ACRYLONITRILE–BUTADIENCE–STYRENE
AC – ASPHALT CONCRETE
ACB – ARTICULATED CONCRETE BLOCK
ACP – ASBESTOS CEMENT WATER PIPE
ADA – AMERICANS WITH DISABILITIES ACT OF 1990 (US)
AISI – AMERICAN IRON & STEEL INSTITUTE
ALIGN – ALIGNMENT
AMP – AMPERES
ANSI – AMERICAN NATIONAL STANDARDS INSTITUTE
AP – ANGLE POINT
APPROX – APPROXIMATE
ARV – AIR RELEASE VALVE
ASA – AMERICAN STANDARD ASSOCIATION
ASTM – AMERICAN SOCIETY FOR TESTING MATERIALS
AVE – AVENUE
BC – BEGIN CURVE
BEG – BEGIN
BLVD – BOULEVARD
BM – BENCH MARK
BOF – BOTTOM OF FOOTING
BVC – BEGIN VERTICAL CURVE
BVCE – BEGIN VERTICAL CURVE ELEVATION
BVCS – BEGIN VERTICAL CURVE STATION
BW – BOTH WAYS
℄ – CENTERLINE
CB – CATCH BASIN (INLET)
CCCL – CEMENT MORTAR COATED & LINED STEEL PIPE
CCEM – CEMENT CONDUIT
CCTL – CORROSION CONTROL TEST LEADS
CCP – CONCRETE CYLINDER PIPE
CDF – CONTROL DENSITY FILL
CFM – CUBIC FEET PER MINUTE
CI – CAST IRON
CIDH – CAST IN DRILLED HOLE
CIP – CAST IRON PIPE
CJ – CONSTRUCTION JOINT
CL – CENTERLINE
CLS – CLASS
CLR – CLEAR
CLSM – CONTROLLED LOW–STRENGTH MATERIAL
CMC – CEMENT MORTAR COAT
CML – CEMENT MORTAR LINE
CMP – CORRUGATED METAL PIPE
CO – CLEAN OUT
CONC – CONCRETE
CONT – CONTINUOUS
CP – CEMENT PIPE
CPC – PLASTIC CONDUIT
CSP – CORRUGATED STEEL PIPE
CTP – CABLE TELEVISION POLE
CTV – CABLE TV
CU FT – CUBIC FEET
CYL – CYLINDER
CIPP – CAST–IN–PLACE PIPE
DB – DRAIN BOX
DBH – DIAMETER AT BREAST HEIGHT
DEP – DEPRESSED
DET – DETAIL
DG – DECOMPOSED GRANITE
DH – DRILL HOLES
DICL – DUCTILE IRON CEMENT LINED
DIP – DUCTILE IRON PIPE
D/S – DOWNSTREAM
DW – DRY WELL
DWG – DRAWING
DWY – DRIVEWAY
EC – END CURVE
ECB – EROSION CONTROL BLANKET
EG – EXISTING GROUND
EL – ELEVATION
EQ – EQUAL
ELEC – ELECTRICAL
EP – EDGE OF PAVEMENT, END POINT
EVC – END VERTICAL CURVE
EVCE – END VERTICAL CURVE ELEVATION
EVCS – END VERTICAL CURVE STATION
EW – EACH WAY
EXIST – EXISTING
FG – FINAL GRADE/FINISHED GRADE
FH – FIRE HYDRANT
FKCL – FIBERGLASS–KRAFT WRAP CEMENT LINED
FL – FLOW LINE
FLG – FLANGE
FP – FEEDER PRESSURE
FT – FEET
FTG – FOOTING
FW – FLOODWALL
GA – GAUGE
GALV – GALVANIZED
GB – GRADE BREAK
GFI – GROUND FAULT INTERRUPTER
GRD – GRADE
HC – HOUSE CONNECTION (SANITARY)
HDPE – HIGH DENSITY POLYETHYLENE
HMW/PE – HIGH MOLECULAR WEIGHT POLYETHYLENE
HORIZ – HORIZONTAL
HP – HORSEPOWER
HW – HEADWALL
ID – INSIDE DIAMETER
IF – INSIDE FACE
IL – INDUCTIVE LOOP
IN – INCH
INSUL – INSULATION
INV – INVERT
IP – IRON PIPE
IPS – IRON PIPE SIZE
JT – JOINT TRENCH
KV – KILO VOLT
LB – POUND
LG – LONG
LLV – LONG LEG VERTICAL
LT – LEFT
MAINT – MAINTENANCE
MAX – MAXIMUM
MDO – MEDIUM DENSITY OVERLAY
MH – MANHOLE
MIN – MINIMUM
MMC – MILPITAS MATERIALS COMPANY
MON – MONUMENT
MW – MONITORING WELL
N – NORTH
N/A – NOT APPLICABLE
NE – NORTHEAST
NEMA – NATIONAL ELECTRICAL MANUFACTURERS ASSOCIATION
NO – NUMBER
NTS – NOT TO SCALE
NW – NORTHWEST
OC – ON CENTER
OD – OUTSIDE DIAMETER
OF – OUTSIDE FACE
OG – ORIGINAL GROUND
OH – OVERHEAD
PCC – PORTLAND CEMENT CONCRETE
PCCP – PRESTRESSED CONCRETE CYLINDER PIPE
PE – PLAIN END
PED – PEDESTRIAN
PG&E – PACIFIC GAS AND ELECTRIC
PI – POINT OF INTERSECTION
PK – PARKER–KALON SURVEY NAIL
PL – PLASTIC LINE
POT – POINT ON TANGENT
PP – POWER POLE
PRC – POINT OF REVERSE CURVE
PSI – POUND PER SQUARE INCH
PT&T – PACIFIC TELEPHONE AND TELEGRAPH
PUE – PUBLIC UTILITY EASEMENT
PV – PRECAST VAULT
PVC – POLYVINYL CHLORIDE
PVI – POINT OF VERTICAL INTERSECTION
PVMT – PAVEMENT
PW – PUMPING WELL
R – RADIUS
RCB – REINFORCED CONCRETE BOX
RCP – REINFORCED CONCRETE PIPE
RD – ROAD
RE – REFERENCE ELECTRODE
REBAR – REINFORCING BAR
REINF – REINFORCED
REQ'D – REQUIRED
RP – RADIUS POINT
RR – RAILROAD
RSP – ROCK RIPRAP SLOPE PROTECTION
RT – RIGHT
RTU – REMOTE TERMINAL UNIT
R/W – RIGHT–OF–WAY
RW – RETAINING WALL
S – SLOPE
S4S – SURFACED ON FOUR SIDES
SCHED – SCHEDULE
SCSP – SACKED CONCRETE SLOPE PROTECTION
SCVWD – SANTA CLARA VALLEY WATER DISTRICT
SD – STORM DRAIN
SDMH – STORM DRAIN MANHOLE
SE – SOUTHEAST
SHT – SHEET
SIM – SIMILAR
SJMW – SAN JOSE MUNICIPAL WATER
SJWC – SAN JOSE WATER COMPANY
SPECS – SPECIFICATIONS
SPRR – SOUTHERN PACIFIC RAILROAD
SQ – SQUARE
SS – SANITARY SEWER
SSMH – SANITARY SEWER MANHOLE
SSTL – STAINLESS STEEL
ST – STREET
STA – STATION
STD – STANDARD
STL – STEEL
SW – SOUTHWEST
SYM – SYMMETRICAL
T – TELEPHONE
T – THICKNESS OF PLATE OR DIMENSION OF WELD
TBM – TEMPORARY BENCH MARK
TC – TELEMETRY CABLE
TCA – TEMPORARY CONSTRUCTION AREA
TCE – TEMPORARY CONSTRUCTION EASEMENT
TCS – TELEMETRY CABLE SPLICE
TEL – TELEPHONE
THW – THERMAL PLASTIC MOISTURE AND HEAT RESISTANT
THWN – THERMAL PLASTIC WITH NYLON COATING MOISTURE AND HEAT RESISTANT
TOB – TOP OF BANK
TOW – TOP OF WALL
TP – TEST PIT LOCATION
TR – TAPE WRAPPED
TRANS – TRANSITION
TS – TRAFFIC SIGNAL OR TUBE STEEL
TYP – TYPICAL
T&B – TOP AND BOTTOM
UG – UNDERGROUND
UON – UNLESS OTHERWISE NOTED
UPRR – UNION PACIFIC RAILROAD
U/S – UPSTREAM
USCGS – UNITED STATES COAST AND GEODEDIC SURVEY
USGS – UNITED STATES GEOLOGICAL SURVEY
V – VOLTAGE
VAC – VOLTAGE ALTERNATING CURRENT
VC – VERTICAL CURVE
VCD – VACANT CONDUIT
VCP – VITRIFIED CLAY PIPE
VEG – VEGETATED
VERT – VERTICAL
VTA – VALLEY TRANSPORTATION AUTHORITY
W – WATER
WM – WATER METER
WSP – WELDED STEEL PIPE
WSCL – WRAPPED STEEL CEMENT LINED
WSEL – WATER SURFACE ELEVATION
WV – WATER VALVE
WWF – WELDED WIRE FABRIC
W/ – WITH
& – AND
@ – AT
℄ – CENTERLINE
Ø – DIAMETER
PL – PROPERTY LINE

DETAIL AND SECTION DESIGNATION

* IF SECTION OR DETAIL APPEARS ON THE SAME DRAWING AS THE CALLOUT, THE DRAWING REFERENCE IS REPLACED WITH A DASH (–)

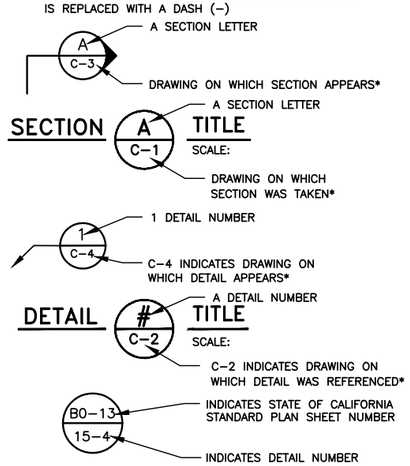

LINE TYPE LEGEND

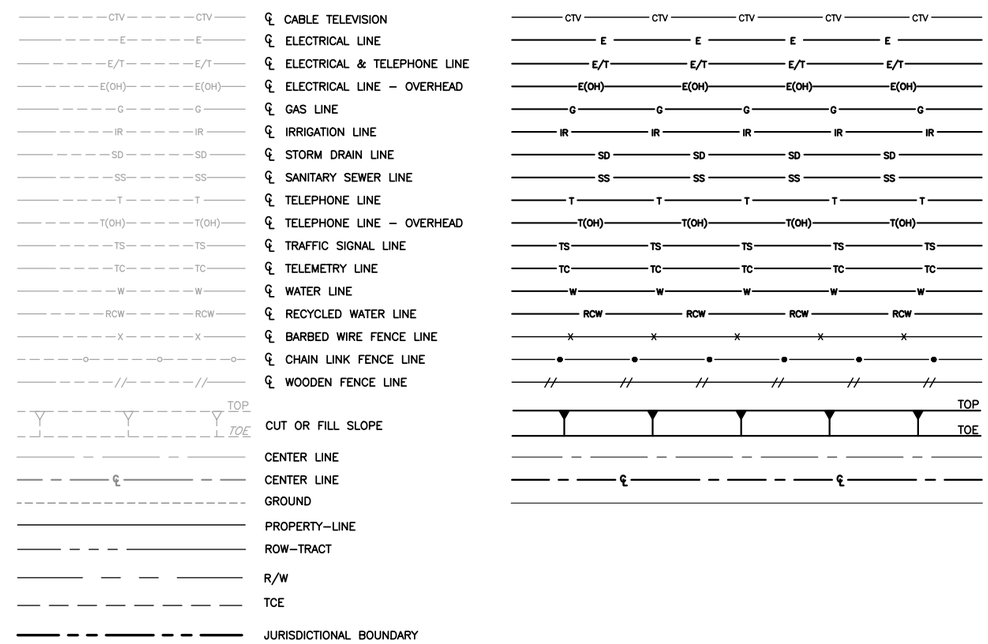

SYMBOLS LEGEND

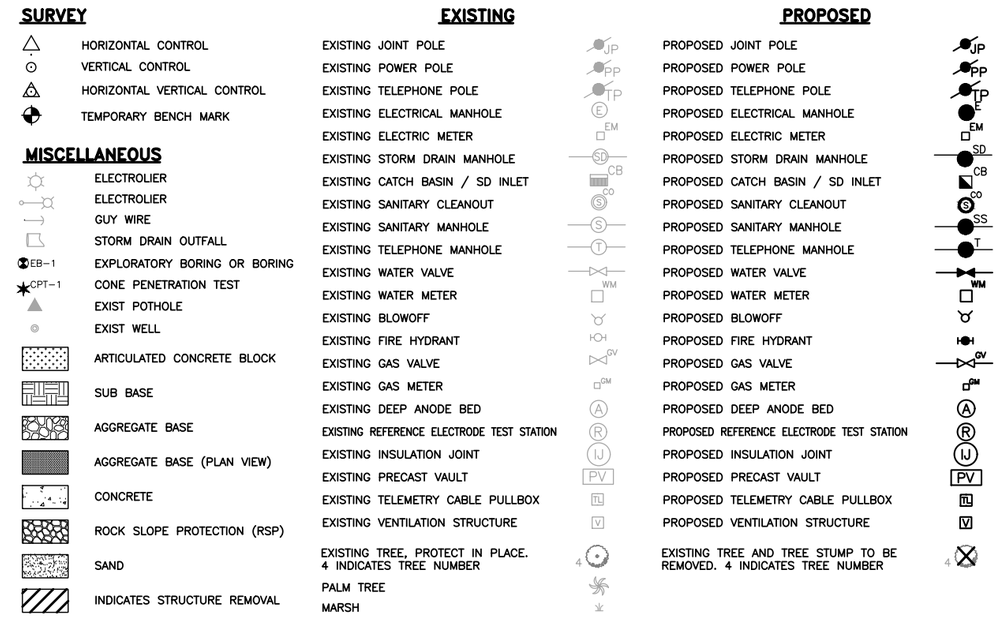

REV	DESCRIPTION	DATE	APPR	REFERENCE INFORMATION AND NOTES

DATE 12/30/2020
DESIGN Y. LEE
DRAWN J. FORD
CHECKED Y. LEE

ENGINEERING CERTIFICATION
REGISTERED PROFESSIONAL ENGINEER YOUHAN LEE No. C42456 CIVIL STATE OF CALIFORNIA
PROJECT ENGINEER 12.30.2020 DATE

SANTA CLARA VALLEY WATER DISTRICT
Valley Water

PROJECT NAME AND SHEET DESCRIPTION:
LOWER CALERA CREEK
FLOOD PROTECTION PROJECT
ABBREVIATIONS, LEGEND AND SYMBOLS

SCALE AS SHOWN
VERIFY SCALES 0 1"
IF NOT 1" INCH ON ORIGINAL DRAWING IF NOT 1" INCH ON THIS SHEET, ADJUST SCALES ACCORDINGLY

PROJECT NUMBER 40174005
SHEET CODE: G–05
SHEET NUMBER: 5 OF 144

USERNAME: Jennford 12/23/2020 3:57 PM
FILENAME: K:\Active Projects\MP-40174005\Lower Calera Creek Project\SHEETS\G-05.dwg
DOCUMENT NUMBER: CAE_CY-G-4018-65910

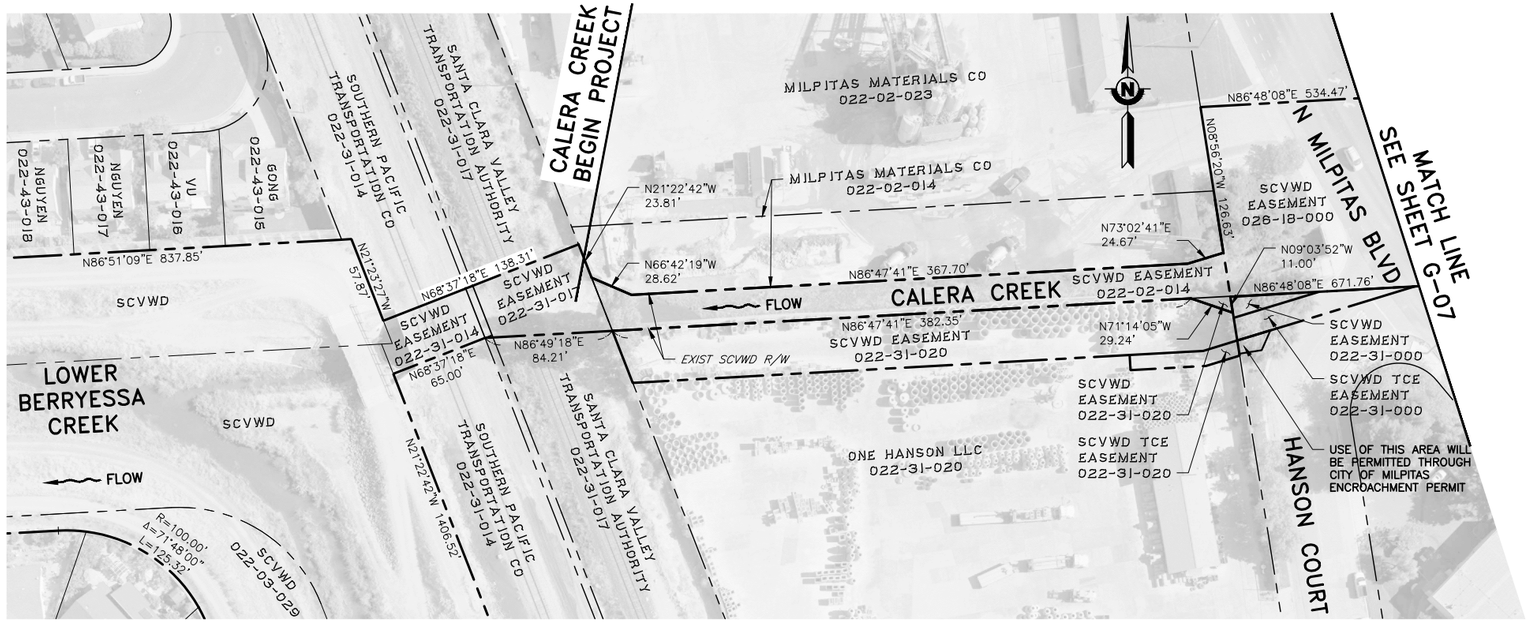

PLAN

SCALE: 1" = 50'

NOTE:

1. THE CITY'S PUBLIC WORKS INSPECTOR SHALL BE NOTIFIED A MINIMUM OF 48-HOURS PRIOR TO ANY WORK OR INSPECTION IN CITY'S RIGHT-OF-WAY, UTILITIES AND EASEMENTS.

REV	DESCRIPTION	DATE	APPR

REFERENCE INFORMATION AND NOTES
1. AERIAL PHOTOGRAPHY WAS TAKEN JULY, 2008.
2. SURVEY LAYOUT SHOWN ON SHEETS G-09 TO G-13.

DATE 12/30/2020
DESIGN Y. LEE
DRAWN M. KOST
CHECKED Y. LEE

ENGINEERING CERTIFICATION
REGISTERED PROFESSIONAL ENGINEER YOUHAN LEE No. C42456 CIVIL STATE OF CALIFORNIA
PROJECT ENGINEER 12.30.2020 DATE

SANTA CLARA VALLEY WATER DISTRICT
Valley Water

PROJECT NAME AND SHEET DESCRIPTION:

LOWER CALERA CREEK FLOOD PROTECTION PROJECT

RIGHT-OF-WAY MAP

SCALE: AS SHOWN
VERIFY SCALES: 0 1" — IF NOT ONE INCH ON ORIGINAL DRAWING IF NOT ONE INCH ON THIS SHEET, ADJUST SCALES ACCORDINGLY

PROJECT NUMBER: 40174005
SHEET CODE: G-06
SHEET NUMBER: 6 OF 144

DOCUMENT NUMBER: CAE_CY-G-4018-65911

USERNAME: Jennford 12/23/2020 3:57 PM
FILENAME: K:\Active Projects\MP-40174005\Lower Calera Creek Project\SHEETS\G-06.dwg

Attachment 4
Page 6 of 144

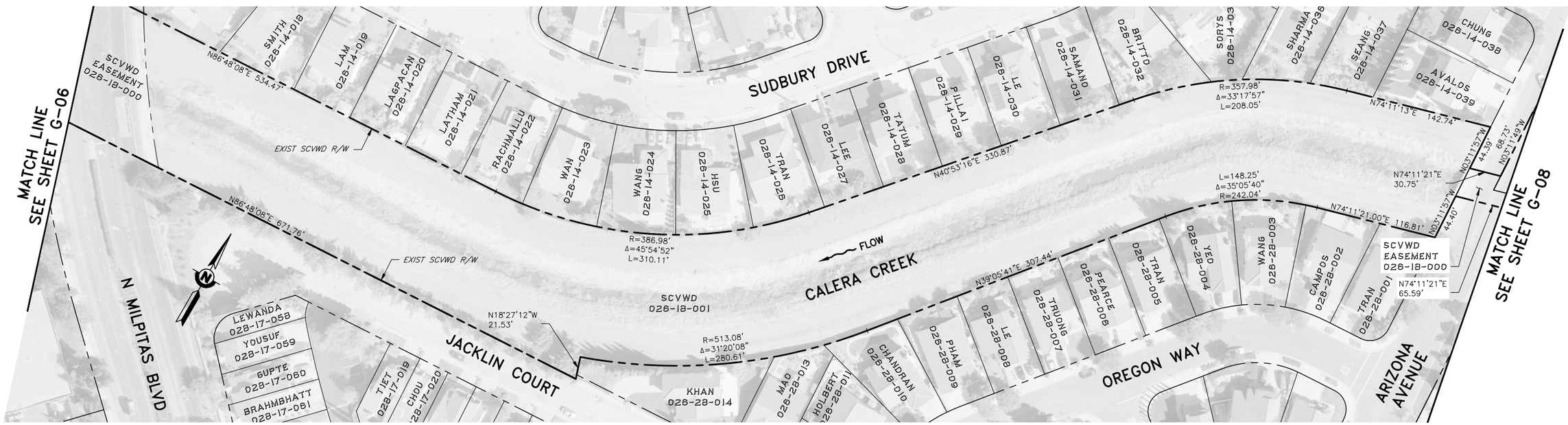

PLAN

SCALE: 1" = 50'

REV	DESCRIPTION	DATE	APPR

REFERENCE INFORMATION AND NOTES
1. AERIAL PHOTOGRAPHY WAS TAKEN JULY, 2008.
2. SURVEY LAYOUT SHOWN ON SHEETS G-09 TO G-13.

DATE 12/30/2020
DESIGN Y. LEE
DRAWN M. KOST
CHECKED Y. LEE

ENGINEERING CERTIFICATION
REGISTERED PROFESSIONAL ENGINEER YOUHAN LEE No. C42456 CIVIL STATE OF CALIFORNIA
PROJECT ENGINEER 12.30.2020 DATE

SANTA CLARA VALLEY WATER DISTRICT
Valley Water

PROJECT NAME AND SHEET DESCRIPTION:
LOWER CALERA CREEK FLOOD PROTECTION PROJECT
RIGHT-OF-WAY MAP

SCALE: AS SHOWN
VERIFY SCALES: 0 1" IF NOT ONE INCH ON ORIGINAL DRAWING IF NOT ONE INCH ON THIS SHEET, ADJUST SCALES ACCORDINGLY

PROJECT NUMBER: 40174005
SHEET CODE: G-07
SHEET NUMBER: 7 OF 144

DOCUMENT NUMBER: CAE_CY-G-4018-65912

Attachment 4
Page 7 of 144

USERNAME: Jennford 12/23/2020 3:57 PM
FILENAME: K:\Active Projects\MP-40174005\Lower Calera Creek Project\SHEETS\G-07.dwg

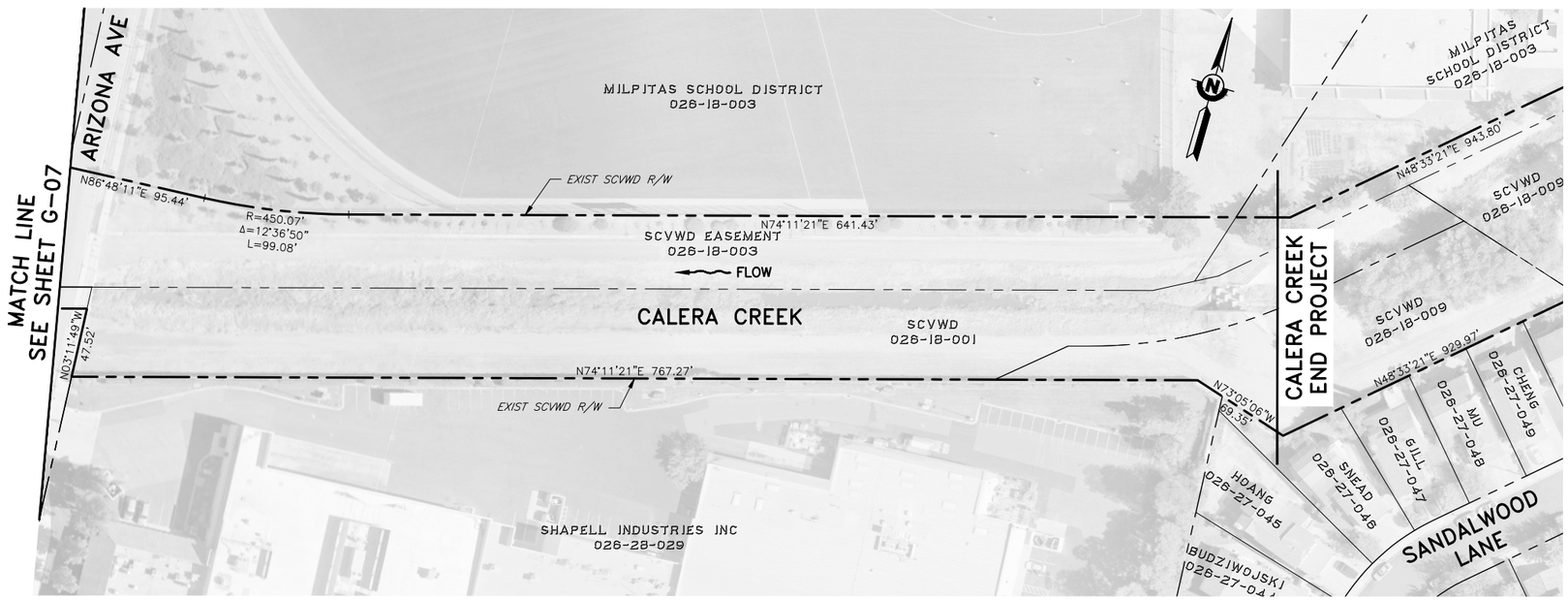

PLAN

SCALE: 1" = 50'

REV	DESCRIPTION	DATE	APPR

Attachment 4
Page 8 of 144

REFERENCE INFORMATION AND NOTES
1. AERIAL PHOTOGRAPHY WAS TAKEN JULY, 2008.
2. SURVEY LAYOUT SHOWN ON SHEETS G-09 TO G-13.

DATE 12/30/2020
DESIGN Y. LEE
DRAWN M. KOST
CHECKED Y. LEE

ENGINEERING CERTIFICATION
REGISTERED PROFESSIONAL ENGINEER YOUHAN LEE No. C42456 CIVIL STATE OF CALIFORNIA
PROJECT ENGINEER — DATE 12.30.2020

SANTA CLARA VALLEY WATER DISTRICT
Valley Water

PROJECT NAME AND SHEET DESCRIPTION:
LOWER CALERA CREEK
FLOOD PROTECTION PROJECT
RIGHT-OF-WAY MAP

SCALE: AS SHOWN
VERIFY SCALES: 0 — 1"
IF NOT ONE INCH ON ORIGINAL DRAWING IF NOT ONE INCH ON THIS SHEET, ADJUST SCALES ACCORDINGLY

PROJECT NUMBER: 40174005
SHEET CODE: G-08
SHEET NUMBER: 8 OF 144

Attachment 4
Page 8 of 144

USERNAME: Jennford 12/23/2020 3:57 PM
FILENAME: K:\Active Projects\MP-40174005\Lower Calera Creek Project\SHEETS\G-08.dwg
DOCUMENT NUMBER: CAE_CY-G-4018-65913

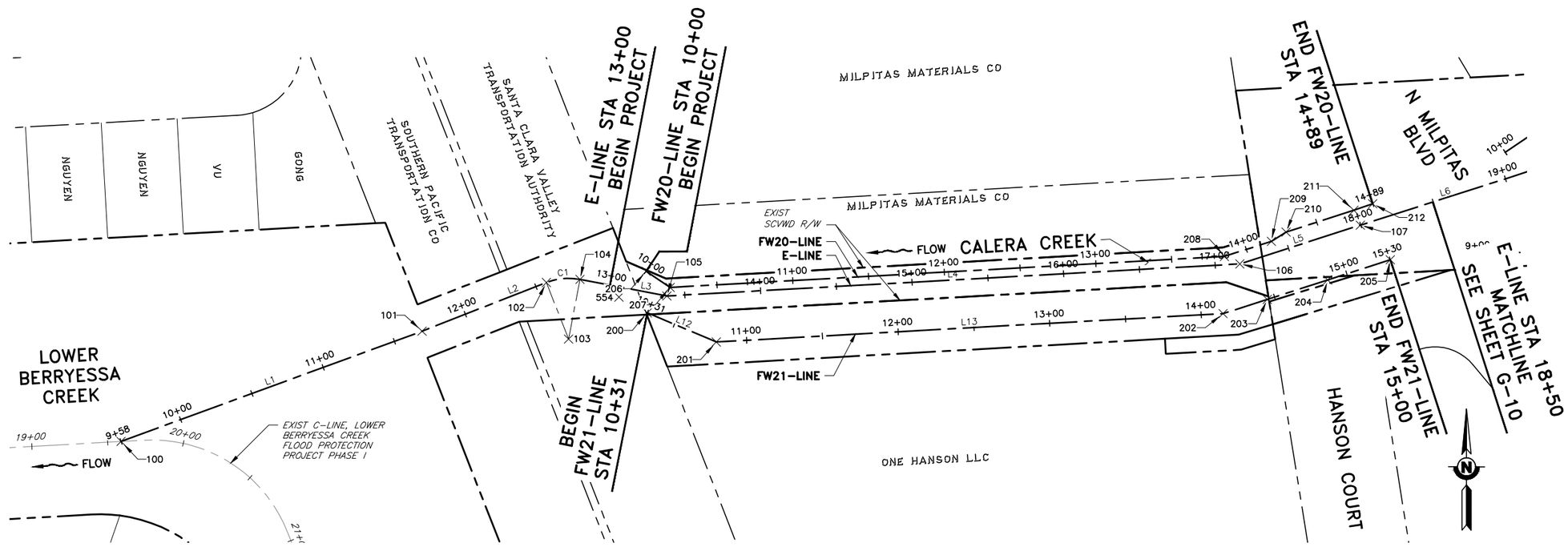

PLAN

SCALE: 1" = 40'

REV	DESCRIPTION	DATE	APPR	REFERENCE INFORMATION AND NOTES

DATE 12/30/2020
DESIGN Y. LEE
DRAWN M. KOST
CHECKED Y. LEE

ENGINEERING CERTIFICATION
REGISTERED PROFESSIONAL ENGINEER YOUHAN LEE No. C42456 CIVIL STATE OF CALIFORNIA
12.30.2020
PROJECT ENGINEER DATE

SANTA CLARA VALLEY WATER DISTRICT
Valley Water

PROJECT NAME AND SHEET DESCRIPTION:

LOWER CALERA CREEK
FLOOD PROTECTION PROJECT

SURVEY LAYOUT
E-LINE STA 13+00 TO 18+50, FW20-LINE STA 10+00 TO 14+89, FW21-LINE STA 10+31 TO 15+00

SCALE: AS SHOWN
VERIFY SCALES: 0 1"
IF NOT ONE INCH ON ORIGINAL DRAWING IF NOT ONE INCH ON THIS SHEET, ADJUST SCALES ACCORDINGLY

PROJECT NUMBER: 40174005
SHEET CODE: G-09
SHEET NUMBER: 9 OF 144

DOCUMENT NUMBER: CAE_CY-G-4018-65914

USERNAME: Jennford 12/24/2020 8:00 AM
FILENAME: K:\Active Projects\MP-40174005\Lower Calera Creek Project\SHEETS\G-09.dwg

Attachment 4
Page 9 of 144

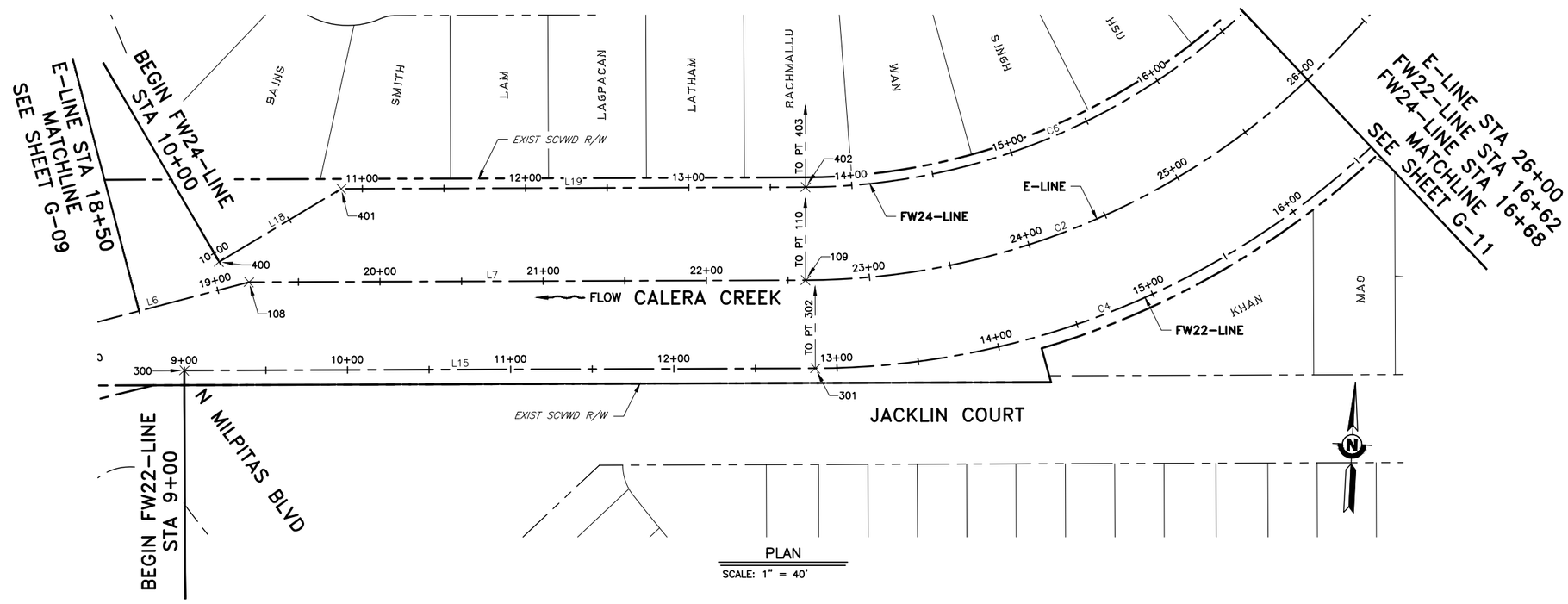

PLAN
SCALE: 1" = 40'

REV	DESCRIPTION	DATE	APPR	REFERENCE INFORMATION AND NOTES

DATE 12/30/2020
DESIGN Y. LEE
DRAWN M. KOST
CHECKED Y. LEE

ENGINEERING CERTIFICATION
REGISTERED PROFESSIONAL ENGINEER YOUHAN LEE No. C42456 CIVIL STATE OF CALIFORNIA
12.30.2020
PROJECT ENGINEER DATE

SANTA CLARA VALLEY WATER DISTRICT
Valley Water

PROJECT NAME AND SHEET DESCRIPTION:
LOWER CALERA CREEK
FLOOD PROTECTION PROJECT
SURVEY LAYOUT E-LINE STA 18+50 TO 26+00, FW22-LINE STA 9+00 TO 16+62, AND FW24-LINE STA 10+00 TO 16+68

SCALE AS SHOWN
VERIFY SCALES 0 1"
IF THIS LINE MEASURES 1 INCH ON ORIGINAL DRAWING IF NOT 1 INCH ON THIS SHEET, ADJUST SCALES ACCORDINGLY

PROJECT NUMBER 40174005
SHEET CODE: G-10
SHEET NUMBER: 10 OF 144

DOCUMENT NUMBER: CAE_CY-G-4018-65915

USERNAME: Jennford 12/23/2020 3:57 PM
FILENAME: K:\Active Projects\MP-40174005\Lower Calera Creek Project\SHEETS\G-10.dwg

Attachment 4
Page 10 of 144

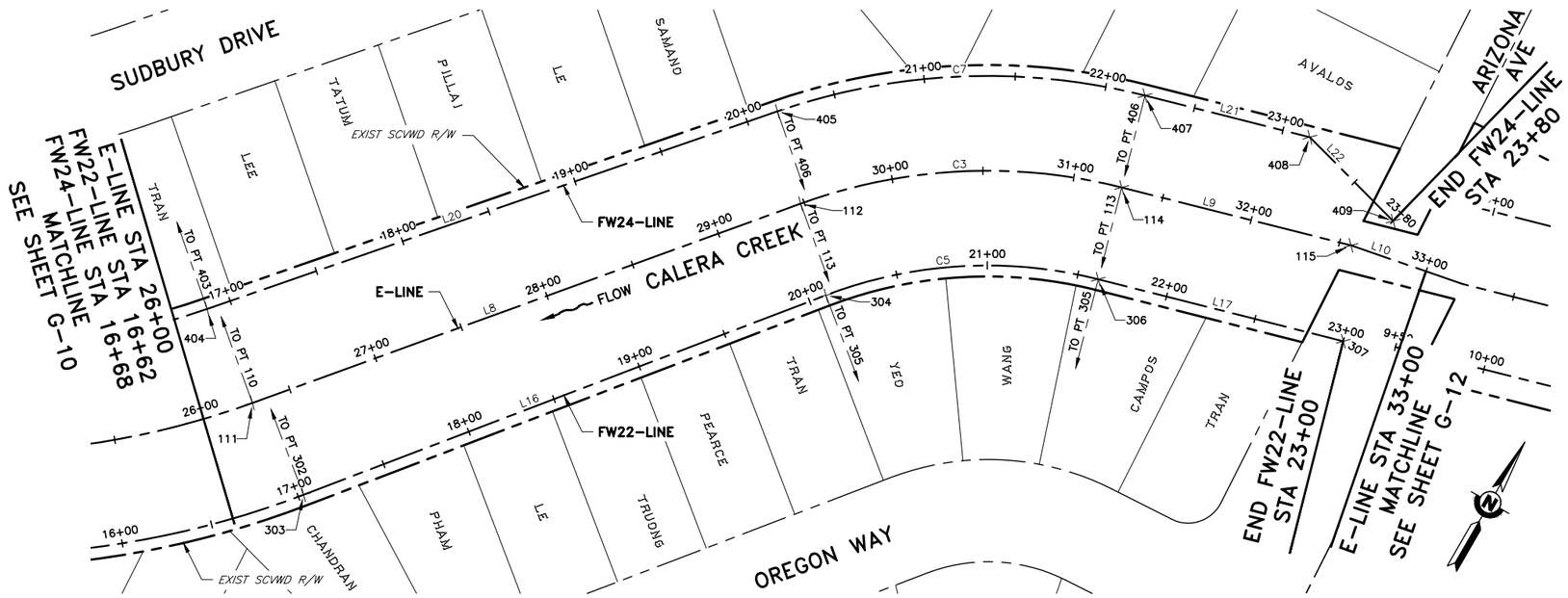

PLAN

SCALE: 1" = 40'

REV	DESCRIPTION	DATE	APPR	REFERENCE INFORMATION AND NOTES

DATE 12/30/2020
DESIGN Y. LEE
DRAWN M. KOST
CHECKED Y. LEE

ENGINEERING CERTIFICATION
REGISTERED PROFESSIONAL ENGINEER YOUHAN LEE No. C42456 CIVIL STATE OF CALIFORNIA
PROJECT ENGINEER 12.30.2020 DATE

SANTA CLARA VALLEY WATER DISTRICT
Valley Water

PROJECT NAME AND SHEET DESCRIPTION:

LOWER CALERA CREEK
FLOOD PROTECTION PROJECT

SURVEY LAYOUT E-LINE STA 26+00 TO 33+00, FW22-LINE STA 16+62 TO 23+00, AND FW24-LINE STA 16+68 TO 23+80

SCALE: AS SHOWN
VERIFY SCALES: 0 1"
IF NOT 1" INCH ON ORIGINAL DRAWING IF NOT 1" INCH ON THIS SHEET, ADJUST SCALES ACCORDINGLY

PROJECT NUMBER: 40174005
SHEET CODE: G-11
SHEET NUMBER: 11 OF 144

DOCUMENT NUMBER: CAE_CY-G-4018-65916

USERNAME: Jennford 12/23/2020 3:58 PM
FILENAME: K:\Active Projects\MP-40174005\Lower Calera Creek Project\SHEETS\G-11.dwg

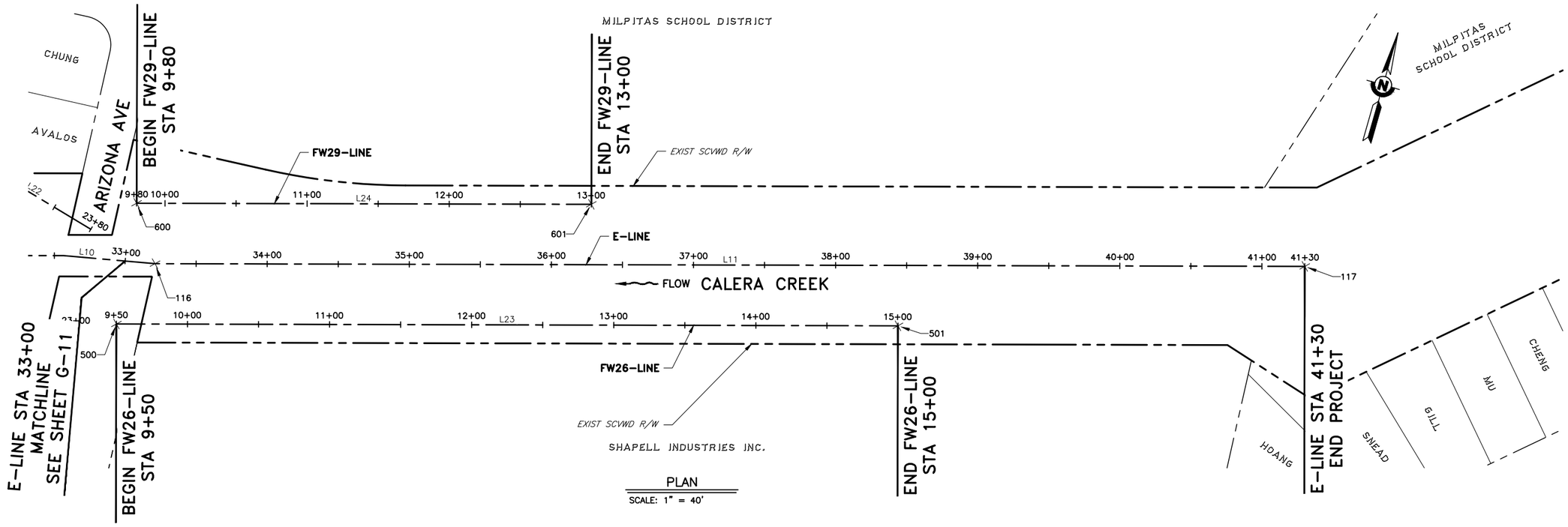

PLAN

SCALE: 1" = 40'

USERNAME: Jennford 12/23/2020 3:58 PM
FILENAME: K:\Active Projects\MP-40174005\Lower Calera Creek Project\SHEETS\G-12.dwg

DOCUMENT NUMBER: CAE_CY-G-4018-65917

REV	DESCRIPTION	DATE	APPR	REFERENCE INFORMATION AND NOTES

Attachment 4
Page 12 of 144

DATE	ENGINEERING CERTIFICATION	SANTA CLARA VALLEY WATER DISTRICT
12/30/2020	REGISTERED PROFESSIONAL ENGINEER YOUHAN LEE No. C42456 CIVIL STATE OF CALIFORNIA	Valley Water
DESIGN Y. LEE		
DRAWN M. KOST		
CHECKED Y. LEE	12.30.2020 PROJECT ENGINEER DATE	

PROJECT NAME AND SHEET DESCRIPTION:

LOWER CALERA CREEK
FLOOD PROTECTION PROJECT

SURVEY LAYOUT E-LINE STA 33+00 TO 41+30,
FW26-LINE STA 9+50 TO 15+00,
FW29-LINE STA 9+80 TO 13+00

SCALE	PROJECT NUMBER
AS SHOWN	40174005
VERIFY SCALES 0 1" IF NOT 1" INCH ON ORIGINAL DRAWING THIS SHEET, ADJUST SCALES ACCORDINGLY	SHEET CODE: G-12
	SHEET NUMBER: 12 OF 144

Attachment 4
Page 12 of 144

LINE TABLE

LINE	LENGTH	BEARING
L1	211.24'	N69°52'10"E
L2	87.99'	N68°37'18"E
L3	58.33'	S79°12'21"E
L4	378.10'	N86°47'41"E
L5	83.40'	N72°09'32"E
L6	119.99'	N72°16'16"E
L7	341.16'	N86°48'08"E
L8	319.72'	N40°01'25"E
L9	129.65'	N74°11'08"E
L10	64.60'	N79°04'27"E
L11	809.11'	N74°11'21"E
L12	49.36'	S67°07'46"E
L13	334.36'	N86°47'41"E
L15	386.70'	N86°48'08"E
L16	306.47'	N39°05'41"E
L17	138.58'	N74°11'21"E
L18	87.22'	N56°07'26"E
L19	284.60'	N86°48'08"E
L20	330.87'	N40°53'16"E
L21	93.22'	N74°11'13"E
L22	64.76'	S74°50'11"E
L23	550.00'	N74°11'21"E
L24	320.00'	N74°11'21"E

CURVE TABLE

CURVE	RADIUS	LENGTH	DELTA
C1	40.00'	22.46'	32°10'21"
C2	450.00'	367.40'	46°46'43"
C3	300.00'	178.87'	34°09'44"
C4	500.00'	416.33'	47°42'27"
C5	248.04'	151.93'	35°05'40"
C6	392.98'	314.92'	45°54'52"
C7	351.98'	204.57'	33°17'57"

E-LINE POINT TABLE

POINT	NORTHING	EASTING	STATION	DESCRIPTION
100	1987876.7026	6151853.5103	9+58.19	BP
101	1987949.4019	6152051.8432	11+69.42	AP
102	1987981.4764	6152133.7786	12+57.41	BC
103	1987944.2287	6152148.3596		RP
104	1987983.5210	6152155.8508	12+79.87	EC
105	1987972.5978	6152213.1446	13+38.20	AP
106	1987993.7388	6152590.6486	17+16.29	AP
107	1988019.2900	6152670.0360	17+99.69	AP
108	1988055.8298	6152784.3319	19+19.68	AP
109	1988074.8611	6153124.9563	22+60.84	BC
110	1988524.1604	6153099.8531		RP
111	1988234.7642	6153444.4542	26+28.24	EC
112	1988479.5962	6153650.0642	29+47.95	BC
113	1988286.6654	6153879.7982		RP
114	1988575.3104	6153798.0418	31+26.83	EC
115	1988610.6422	6153922.7826	32+56.47	AP
116	1988622.8858	6153986.2087	33+21.07	AP
117	1988843.3377	6154764.7073	41+30.18	EP

FW20-LINE POINT TABLE

POINT	NORTHING	EASTING	STATION	DESCRIPTION
			10+00.00	
206	1987988.8813	6152199.4478	10+19.09	BP
207	1987978.2266	6152215.2923	13+78.19	AP
208	1987998.6801	6152580.5189	13+99.72	AP
209	1988008.6205	6152611.4037	14+12.81	AP
210	1988014.7201	6152621.0887	14+28.41	AP
211	1988029.0930	6152665.7450	14+75.32	AP
212	1988033.4353	6152678.1588	14+88.47	EP

FW21-LINE POINT TABLE

POINT	NORTHING	EASTING	STATION	DESCRIPTION
200	1987961.4876	6152200.2340	10+30.64	BP
201	1987942.2871	6152245.6958	10+80.00	AP
202	1987960.9828	6152579.5357	14+14.36	AP
203	1987970.3628	6152608.6794	14+44.98	AP
204	1987983.1844	6152648.5158	14+86.83	AP
205	1987996.4492	6152689.7292	15+30.12	EP

FW22-LINE POINT TABLE

POINT	NORTHING	EASTING	STATION	DESCRIPTION
300	1987999.6975	6152747.6268	9+00.00	BP
301	1988021.2697	6153133.7289	12+86.70	BC
302	1988520.4911	6153105.8366		RP
303	1988205.1889	6153493.8888	17+03.03	EC
304	1988443.0387	6153687.1478	20+09.50	BC
305	1988286.6248	6153879.6513		RP
306	1988525.2788	6153812.0703	21+61.42	EC
307	1988563.0358	6153945.4046	23+00.00	EP

FW24-LINE POINT TABLE

POINT	NORTHING	EASTING	STATION	DESCRIPTION
400	1988067.2910	6152765.4151	9+99.84	BP
401	1988115.9049	6152837.8255	10+87.05	AP
402	1988131.7814	6153121.9852	13+71.66	BC
403	1988524.1507	6153100.0628		RP
404	1988266.9138	6153397.1545	16+86.58	EC
405	1988517.0534	6153613.7380	20+17.45	BC
406	1988286.6532	6153879.8349		RP
407	1988625.3153	6153783.9192	22+22.02	EC
408	1988650.7176	6153873.6102	23+15.24	AP
409	1988633.7767	6153936.1196	23+80.00	EP

FW26-LINE POINT TABLE

POINT	NORTHING	EASTING	STATION	DESCRIPTION
500	1988574.6092	6153971.7439	9+50.00	BP
501	1988724.4634	6154500.9354	15+00.00	EP

FW29-LINE POINT TABLE

POINT	NORTHING	EASTING	STATION	DESCRIPTION
600	1988660.2251	6153962.0500	9+80.00	BP
601	1988747.4130	6154269.9433	13+00.00	EP

SURVEY CONTROL POINT TABLE

POINT	NORTHING	EASTING	ELEVATION	DESCRIPTION
554	1987971.87	6152181.53	16.33	CUT CROSS IN CONCRETE ON TOP OF RCB AT RR FENCE
20414	1987332.94	6151957.24	13.54	BRASS DISK WITH PUNCH IN MON BOX AT PESCADERO STREET AND LAGUNA DRIVE
20486	1988080.67	6151221.00	16.58	BRASS DISK WITH PUNCH IN MONUMENT BOX AT 266 SUMMERWIND DRIVE
20499	1989074.74	6153932.03	25.72	BRASS DISK WITH PUNCH IN MONUMENT BOX AT ARIZONA AVENUE AND MIDWICK DRIVE
20503	1988013.51	6153604.40	17.73	BRASS DISK WITH PUNCH IN MONUMENT BOX AT JACKLIN CIRCLE AND JACKLIN COURT
20509	1990285.40	6155547.08	54.48	BRASS DISK WITH PUNCH IN MONUMENT BOX AT 1380 CIROLERO STREET
20515	1988535.57	6155585.19	26.02	BRASS DISK WITH PUNCH IN MONUMENT BOX AT GORDON STREET AND ALTAMONT DRIVE
20636	1987253.02	6152757.30	15.70	BRASS DISK WITH PUNCH IN MONUMENT BOX AT END OF HANSON COURT
20642	1988607.38	6156066.65	27.76	BRASS DISK WITH PUNCH IN MONUMENT BOX AT 698 GRAYSON WAY
BM276R	–	–	17.18	BRASS DISK WITH PUNCH AT TOP/BACK OF MOST WESTERLY CATCH BASIN AT NORTHWESTERLY CORNER OF NORTH MILPITAS BOULEVARD AND NORTH ABEL STREET

USERNAME: Jennford 12/23/2020 3:58 PM
FILENAME: K:\Active Projects\MP-40174005\Lower Calera Creek Project\SHEETS\G-13.dwg
DOCUMENT NUMBER: CAE_CY-G-4018-65918

REV	DESCRIPTION	DATE	APPR	REFERENCE INFORMATION AND NOTES
	Attachment 4 Page 13 of 144			

DATE 12/30/2020
DESIGN Y. LEE
DRAWN M. KOST
CHECKED Y. LEE

ENGINEERING CERTIFICATION
REGISTERED PROFESSIONAL ENGINEER YOUHAN LEE No. C42456 CIVIL STATE OF CALIFORNIA
PROJECT ENGINEER 12.30.2020 DATE

SANTA CLARA VALLEY WATER DISTRICT
Valley Water

PROJECT NAME AND SHEET DESCRIPTION:
LOWER CALERA CREEK FLOOD PROTECTION PROJECT
SURVEY LAYOUT TABLES

SCALE AS SHOWN
VERIFY SCALES 0 1"
IF NOT ONE INCH ON ORIGINAL DRAWING IF NOT ONE INCH ON THIS SHEET, ADJUST SCALES ACCORDINGLY

PROJECT NUMBER 40174005
SHEET CODE: G-13
SHEET NUMBER: 13 OF 144

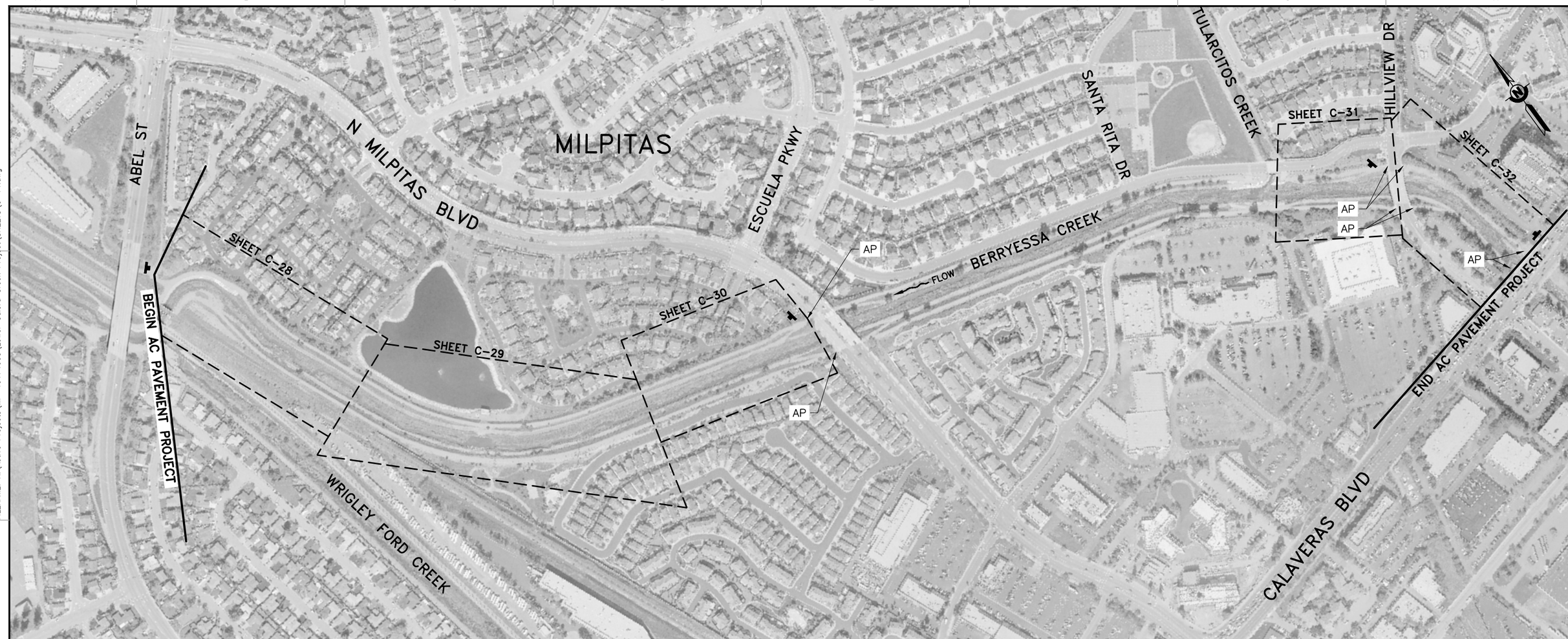

INDEX MAP

SCALE: 1" = 200'

GENERAL NOTES

1. SEE SHT G-03 FOR GENERAL NOTES.

LEGEND

PROJECT SIGN (SEE GENERAL NOTE 1)

AP ACCESS POINT

DESIGN NOTES

1. SURVEY DATA:

   BASIS OF ELEVATION: NORTH AMERICAN VERTICAL DATUM 1988 (NAVD88) MEASURED IN U.S. SURVEY FEET
   NAVD88 = NGVD29 + 2.8 FEET

   BASIS OF BEARING: NORTH AMERICAN HORIZONTAL DATUM 1983 (NAD83), CALIFORNIA STATE PLANE COORDINATE SYSTEM ZONE III, U.S. FEET.

   SURVEY CONTROL POINTS: SEE TABLE ON SHEETS G-25.

2. SEE SHTS G-20 THRU G-26 FOR SURVEY LAYOUT AND SURVEY LAYOUT DATA.

REV	DESCRIPTION	DATE	APPR

REFERENCE INFORMATION AND NOTES
1. AERIAL PHOTOGRAPHY WAS TAKEN APRIL 2002.

DATE 12/30/2020
DESIGN Y. LEE
DRAWN J. FORD
CHECKED Y. LEE

ENGINEERING CERTIFICATION
REGISTERED PROFESSIONAL ENGINEER YOUHAN LEE No. C42456 CIVIL STATE OF CALIFORNIA
PROJECT ENGINEER 12.30.2020 DATE

SANTA CLARA VALLEY WATER DISTRICT
Valley Water

PROJECT NAME AND SHEET DESCRIPTION:
LOWER CALERA CREEK FLOOD PROTECTION PROJECT
INDEX MAP II AND DESIGN NOTES

SCALE: AS SHOWN
VERIFY SCALES 0 1"
IF NOT ONE INCH ON ORIGINAL DRAWING IF NOT ONE INCH ON THIS SHEET, ADJUST SCALES ACCORDINGLY

PROJECT NUMBER: 40174005
SHEET CODE: G-14
SHEET NUMBER: 14 OF 144

DOCUMENT NUMBER: CAE_CY-G-4018-65919

USERNAME: Jennford 12/24/2020 8:14 AM
FILENAME: K:\Active Projects\MP-40174005\Lower Calera Creek Project\SHEETS\G-14.dwg

Attachment 4
Page 14 of 144

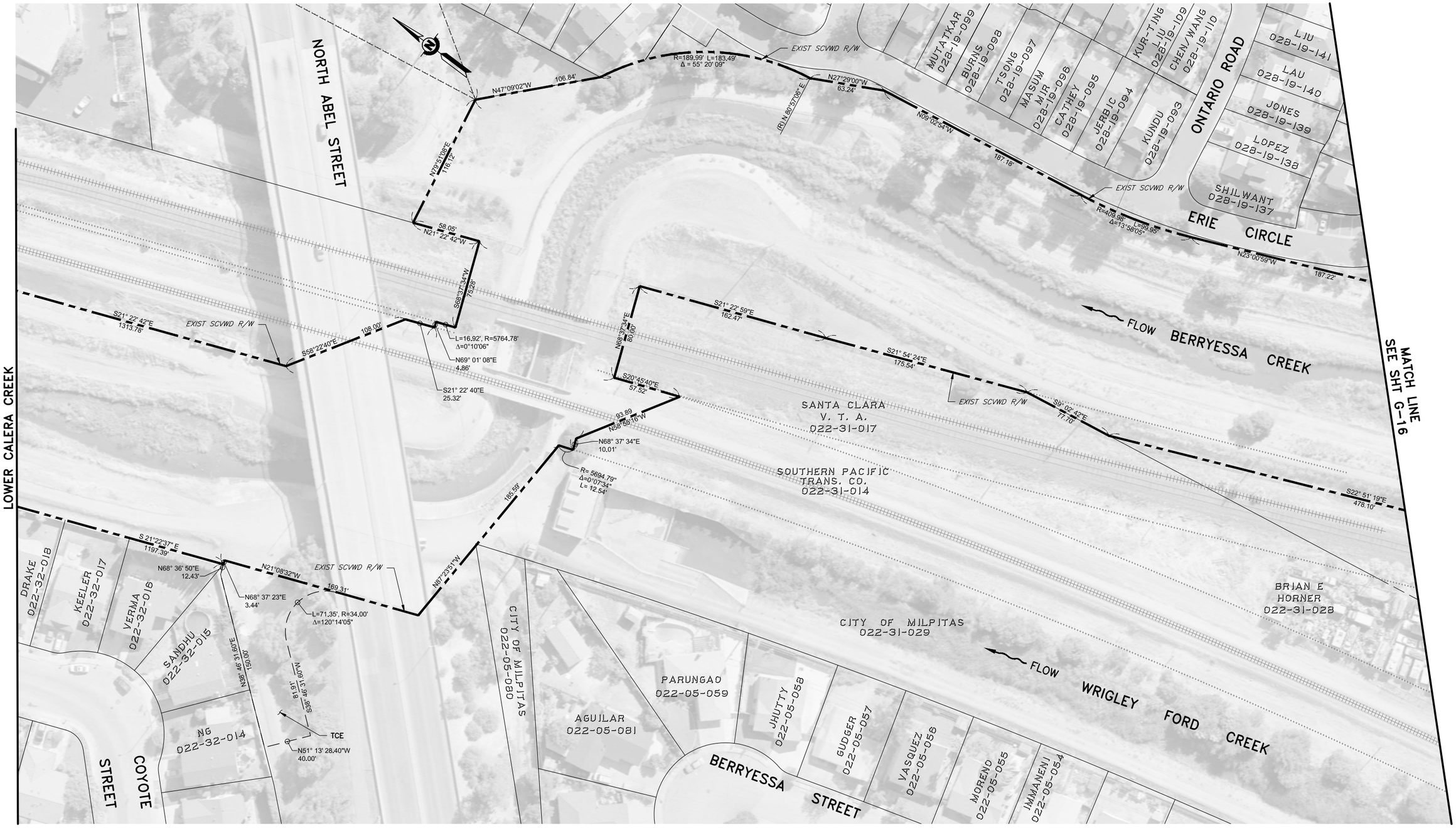

PLAN
SCALE 1" = 40'

REV	DESCRIPTION	DATE	APPR

REFERENCE INFORMATION AND NOTES
1. SURVEY LAYOUT SHOWN ON SHEETS G-20 THROUGH G-26.
2. AERIAL PHOTOGRAPHY WAS TAKEN JULY 2008.

DATE 12/30/2020
DESIGN Y. LEE
DRAWN J. FORD
CHECKED Y. LEE

ENGINEERING CERTIFICATION
REGISTERED PROFESSIONAL ENGINEER YOUHAN LEE No. C42456 CIVIL STATE OF CALIFORNIA
PROJECT ENGINEER 12.30.2020 DATE

SANTA CLARA VALLEY WATER DISTRICT
Valley Water

PROJECT NAME AND SHEET DESCRIPTION:
LOWER CALERA CREEK FLOOD PROTECTION PROJECT
RIGHT OF WAY MAP

SCALE AS SHOWN
VERIFY SCALES 0 1"
IF NOT ONE INCH ON ORIGINAL DRAWING IF NOT ONE INCH ON THIS SHEET, ADJUST SCALES ACCORDINGLY

PROJECT NUMBER 40174005
SHEET CODE: G-15
SHEET NUMBER: 15 OF 144

DOCUMENT NUMBER: CAE_CY-G-4018-65920

USERNAME: Jennford 12/23/2020 3:58 PM
FILENAME: K:\Active Projects\MP-40174005\Lower Calera Creek Project\SHEETS\G-15.dwg

Attachment 4
Page 15 of 144

PLAN

SCALE 1" = 40'

REV	DESCRIPTION	DATE	APPR

REFERENCE INFORMATION AND NOTES

1. SURVEY LAYOUT SHOWN ON SHEETS G-20 THROUGH G-26.
2. AERIAL PHOTOGRAPHY WAS TAKEN JULY 2008.

DATE 12/30/2020
DESIGN Y. LEE
DRAWN J. FORD
CHECKED Y. LEE

ENGINEERING CERTIFICATION

REGISTERED PROFESSIONAL ENGINEER YOUHAN LEE No. C42456 CIVIL STATE OF CALIFORNIA

PROJECT ENGINEER 12.30.2020 DATE

SANTA CLARA VALLEY WATER DISTRICT

Valley Water

PROJECT NAME AND SHEET DESCRIPTION:

LOWER CALERA CREEK FLOOD PROTECTION PROJECT

RIGHT OF WAY MAP

SCALE AS SHOWN

VERIFY SCALES 0 1"

IF NOT ONE INCH ON ORIGINAL DRAWING FOOT THIS SHEET, ADJUST SCALES ACCORDINGLY

PROJECT NUMBER 40174005

SHEET CODE: G-16

SHEET NUMBER: 16 OF 144

Attachment 4
Page 16 of 144

USERNAME: Jennford 12/23/2020 3:59 PM
FILENAME: K:\Active Projects\MP-40174005\Lower Calera Creek Project\SHEETS\G-16.dwg
DOCUMENT NUMBER: CAE_CY-G-4018-65921

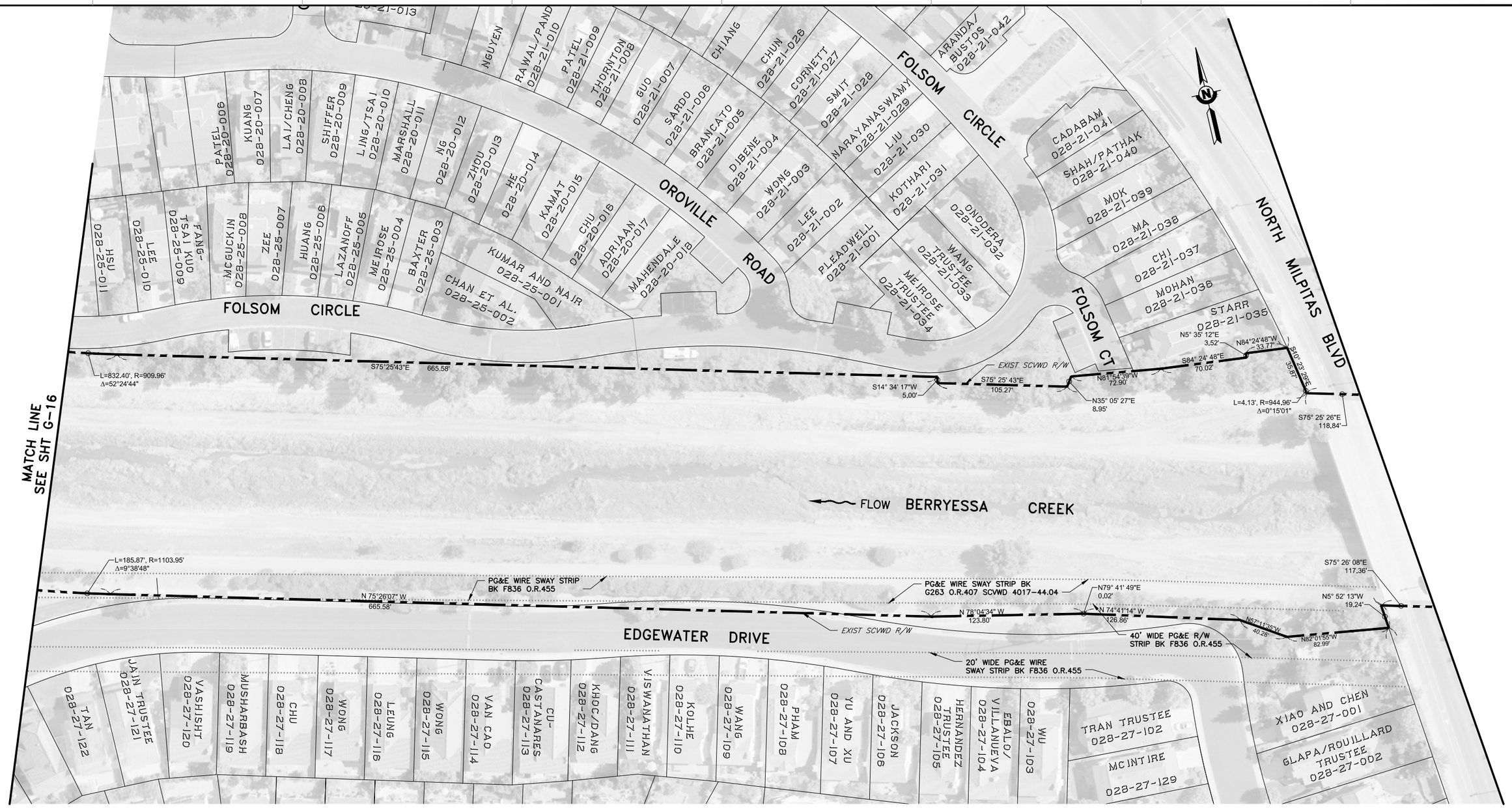

PLAN

SCALE 1" = 40'

REV	DESCRIPTION	DATE	APPR

REFERENCE INFORMATION AND NOTES

1. SURVEY LAYOUT SHOWN ON SHEETS G-20 THROUGH G-26.
2. AERIAL PHOTOGRAPHY WAS TAKEN JULY 2008.

DATE 12/30/2020
DESIGN Y. LEE
DRAWN J. FORD
CHECKED Y. LEE

ENGINEERING CERTIFICATION

REGISTERED PROFESSIONAL ENGINEER YOUHAN LEE No. C42456 CIVIL STATE OF CALIFORNIA

PROJECT ENGINEER 12.30.2020 DATE

SANTA CLARA VALLEY WATER DISTRICT

Valley Water

PROJECT NAME AND SHEET DESCRIPTION:

LOWER CALERA CREEK FLOOD PROTECTION PROJECT

RIGHT OF WAY MAP

SCALE AS SHOWN

VERIFY SCALES 0 1"

IF THIS LINE 1 INCH ON ORIGINAL DRAWING IS NOT 1 INCH ON THIS SHEET, ADJUST SCALES ACCORDINGLY

PROJECT NUMBER 40174005

SHEET CODE: G-17

SHEET NUMBER: 17 OF 144

DOCUMENT NUMBER: CAE_CY-G-4018-65922

USERNAME: Jennford 12/23/2020 3:59 PM
FILENAME: K:\Active Projects\MP-40174005\Lower Calera Creek Project\SHEETS\G-17.dwg

Attachment 4
Page 17 of 144

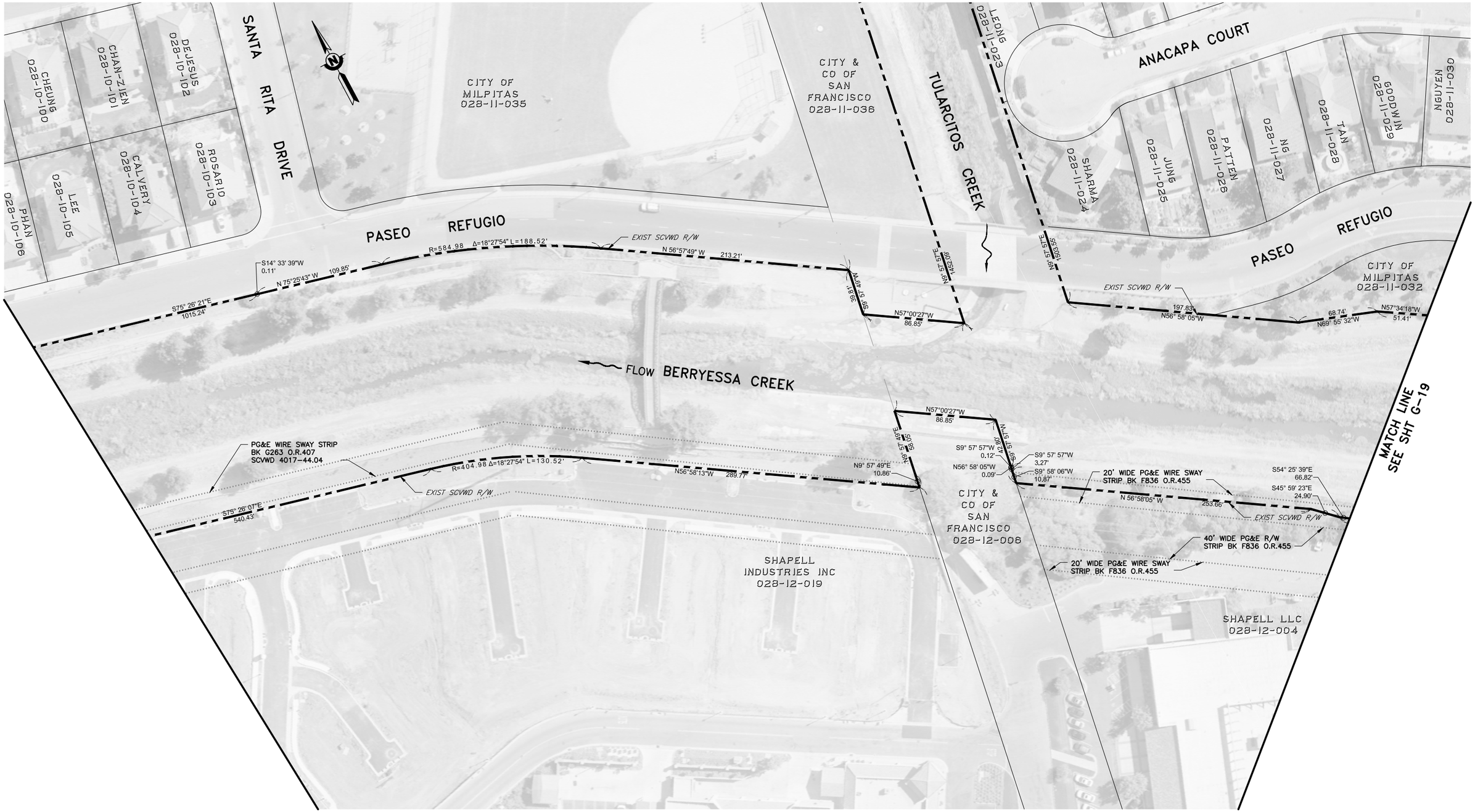

PLAN

SCALE 1" = 40'

USERNAME: Jennford 12/23/2020 3:59 PM
FILENAME: K:\Active Projects\MP-40174005\Lower Calera Creek Project\SHEETS\G-18.dwg

DOCUMENT NUMBER: CAE_CY-G-4018-65923

REV	DESCRIPTION	DATE	APPR

REFERENCE INFORMATION AND NOTES

1. SURVEY LAYOUT SHOWN ON SHEETS G-20 THROUGH G-26.
2. AERIAL PHOTOGRAPHY WAS TAKEN JULY 2008.

DATE	12/30/2020
DESIGN	Y. LEE
DRAWN	J. FORD
CHECKED	Y. LEE

ENGINEERING CERTIFICATION

REGISTERED PROFESSIONAL ENGINEER YOUHAN LEE No. C42456 CIVIL STATE OF CALIFORNIA

PROJECT ENGINEER — DATE 12.30.2020

SANTA CLARA VALLEY WATER DISTRICT

Valley Water

PROJECT NAME AND SHEET DESCRIPTION:

LOWER CALERA CREEK FLOOD PROTECTION PROJECT

RIGHT OF WAY MAP

SCALE	PROJECT NUMBER
AS SHOWN	40174005
VERIFY SCALES 0 1" IF NOT ONE INCH ON ORIGINAL DRAWING IF NOT ONE INCH ON THIS SHEET, ADJUST SCALES ACCORDINGLY	SHEET CODE: G-18
	SHEET NUMBER: 18 OF 144

Attachment 4
Page 18 of 144

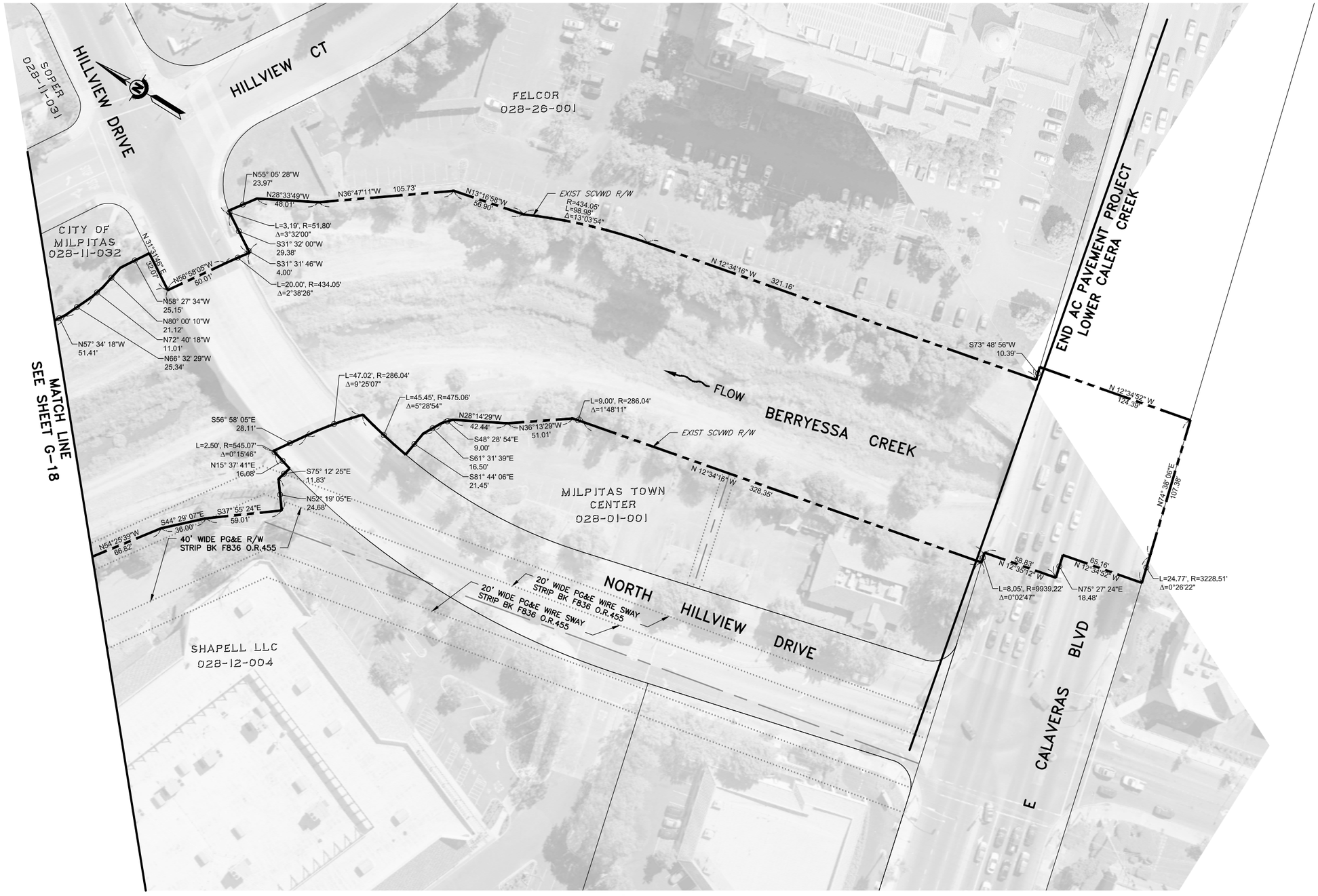

PLAN

SCALE 1" = 40'

REV	DESCRIPTION	DATE	APPR

REFERENCE INFORMATION AND NOTES

1. SURVEY LAYOUT SHOWN ON SHEETS G-20 THROUGH G-26.
2. AERIAL PHOTOGRAPHY WAS TAKEN JULY 2008.

DATE 12/30/2020
DESIGN Y. LEE
DRAWN J. FORD
CHECKED Y. LEE

ENGINEERING CERTIFICATION

REGISTERED PROFESSIONAL ENGINEER YOUHAN LEE No. C42456 CIVIL STATE OF CALIFORNIA

PROJECT ENGINEER — DATE 12.30.2020

SANTA CLARA VALLEY WATER DISTRICT

Valley Water

PROJECT NAME AND SHEET DESCRIPTION:

LOWER CALERA CREEK FLOOD PROTECTION PROJECT

RIGHT OF WAY MAP

SCALE: AS SHOWN

VERIFY SCALES: 0 — 1"

BAR SCALE 1 INCH ON ORIGINAL DRAWING IF NOT 1 INCH ON THIS SHEET, ADJUST SCALES ACCORDINGLY

PROJECT NUMBER: 40174005

SHEET CODE: G-19

SHEET NUMBER: 19 OF 144

DOCUMENT NUMBER: CAE_CY-G-4018-65924

USERNAME: Jennford 12/23/2020 3:59 PM
FILENAME: K:\Active Projects\MP-40174005\Lower Calera Creek Project\SHEETS\G-19.dwg

Attachment 4
Page 19 of 144

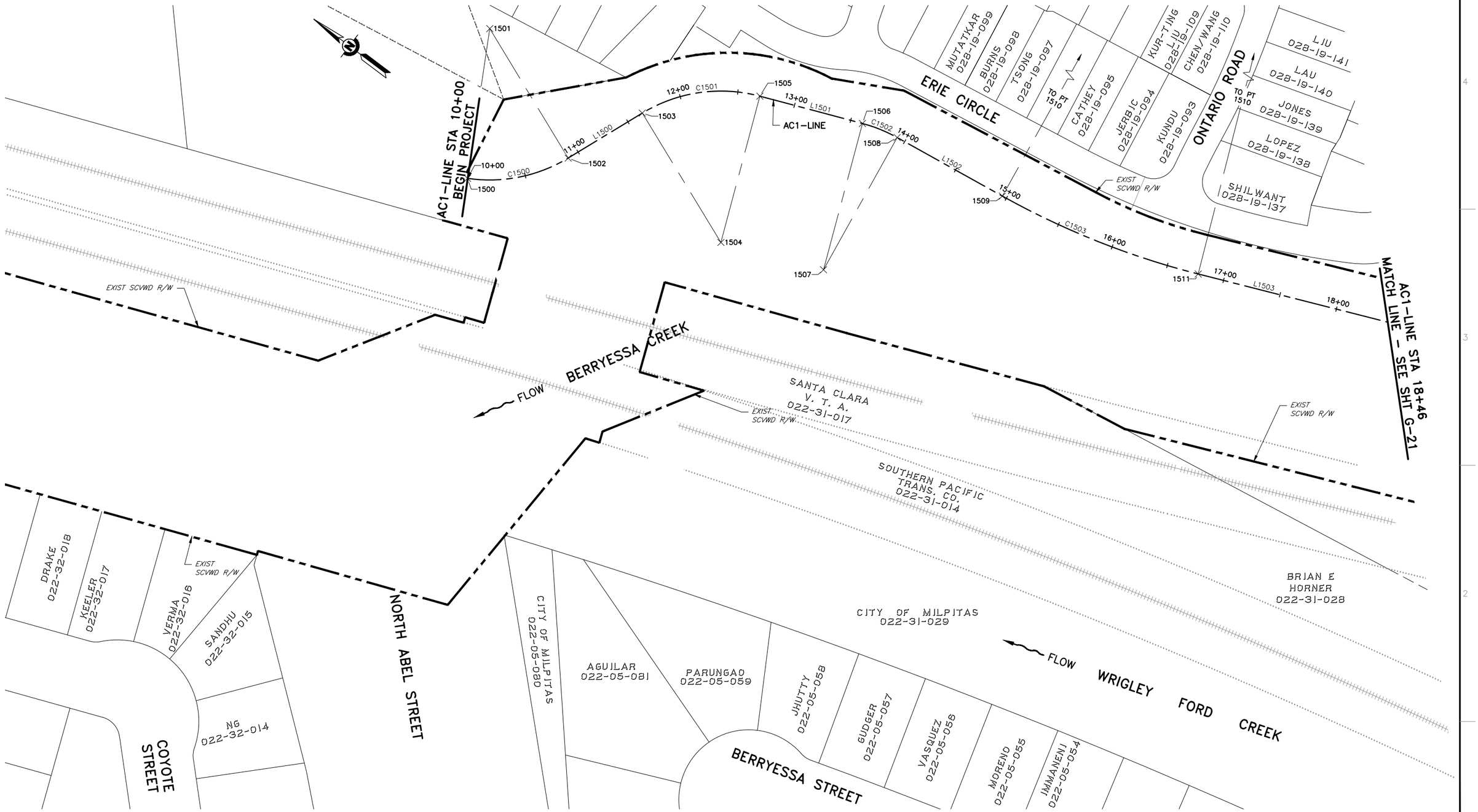

PLAN
SCALE 1" = 40'

REV	DESCRIPTION	DATE	APPR

REFERENCE INFORMATION AND NOTES

1. AERIAL PHOTOGRAPHY WAS TAKEN JULY 2008.
2. SEE SHTS G-25 & G-26 FOR POINT DATA, LINE DATA AND CURVE DATA TABLE.

DATE 12/30/2020
DESIGN Y. LEE
DRAWN J. FORD
CHECKED Y. LEE

ENGINEERING CERTIFICATION
REGISTERED PROFESSIONAL ENGINEER YOUHAN LEE No. C42456 CIVIL STATE OF CALIFORNIA
12.30.2020
PROJECT ENGINEER DATE

SANTA CLARA VALLEY WATER DISTRICT
Valley Water

PROJECT NAME AND SHEET DESCRIPTION:
LOWER CALERA CREEK FLOOD PROTECTION PROJECT
SURVEY LAYOUT AC1-LINE STA 10+00 TO 18+46

SCALE AS SHOWN
VERIFY SCALES 0 1"
IF NOT ONE INCH ON ORIGINAL DRAWING, ADJUST SCALES ACCORDINGLY

PROJECT NUMBER 40174005
SHEET CODE: G-20
SHEET NUMBER: 20 OF 144

DOCUMENT NUMBER: CAE_CY-G-4018-65925

USERNAME: Jennford 12/23/2020 4:00 PM
FILENAME: K:\Active Projects\MP-40174005\Lower Calera Creek Project\SHEETS\G-20.dwg

Attachment 4
Page 20 of 144

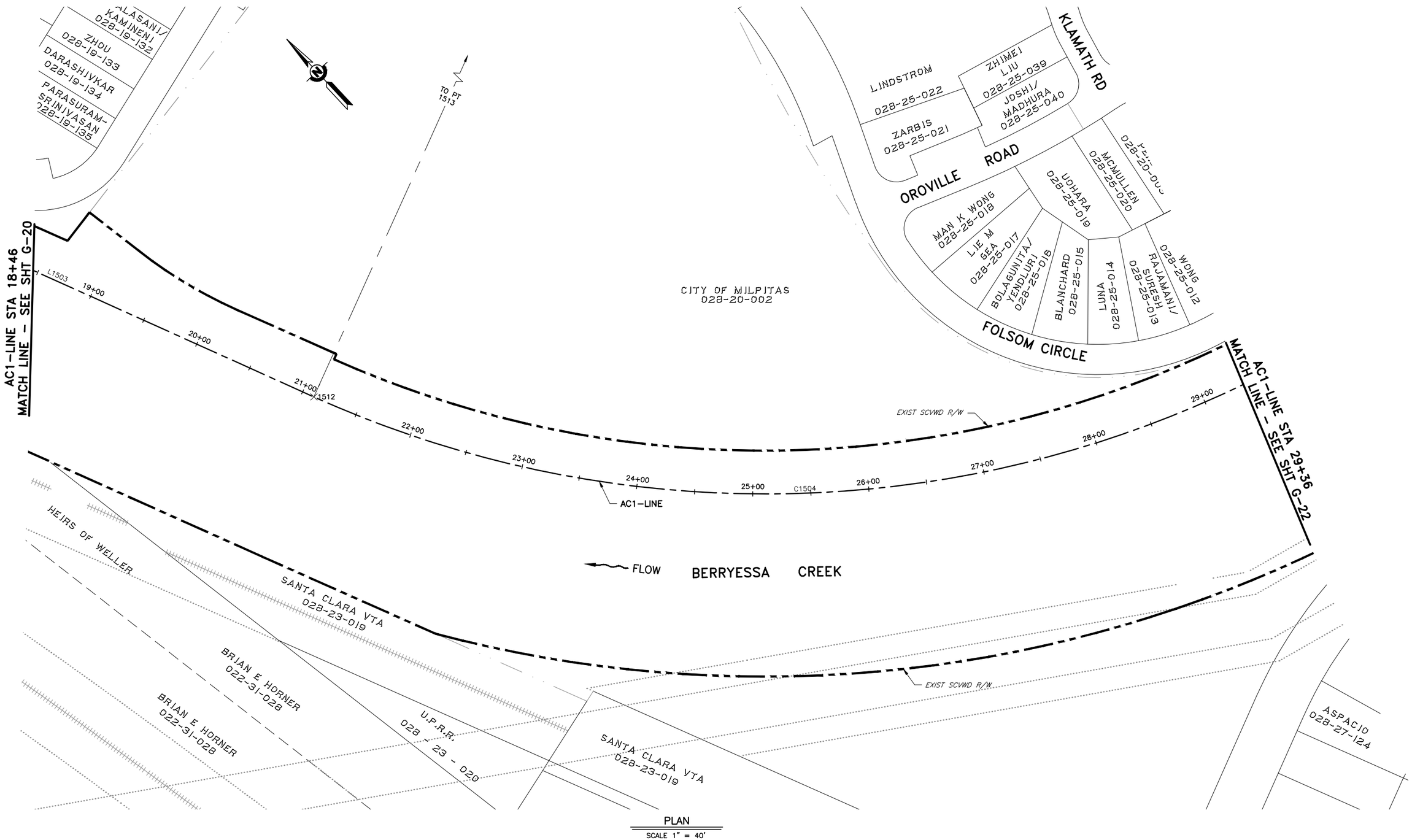

PLAN
SCALE 1" = 40'

REV	DESCRIPTION	DATE	APPR

REFERENCE INFORMATION AND NOTES
1. AERIAL PHOTOGRAPHY WAS TAKEN JULY 2008.
2. SEE SHTS G-25 & G-26 FOR POINT DATA, LINE DATA AND CURVE DATA TABLES.

DATE	12/30/2020
DESIGN	Y. LEE
DRAWN	J. FORD
CHECKED	Y. LEE

ENGINEERING CERTIFICATION
REGISTERED PROFESSIONAL ENGINEER YOUHAN LEE No. C42456 CIVIL STATE OF CALIFORNIA
12.30.2020
PROJECT ENGINEER DATE

SANTA CLARA VALLEY WATER DISTRICT
Valley Water

PROJECT NAME AND SHEET DESCRIPTION:
LOWER CALERA CREEK FLOOD PROTECTION PROJECT
SURVEY LAYOUT
AC1-LINE STA 18+46 TO 29+36

SCALE: AS SHOWN
VERIFY SCALES: 0 1"
IF THIS BAR IS NOT 1 INCH ON ORIGINAL DRAWING THEN SCALE ADJUST ACCORDINGLY
PROJECT NUMBER: 40174005
SHEET CODE: G-21
SHEET NUMBER: 21 OF 144

Attachment 4
Page 21 of 144

USERNAME: Jennford 12/24/2020 8:25 AM
FILENAME: K:\Active Projects\MP-40174005\Lower Calera Creek Project\SHEETS\G-21.dwg
DOCUMENT NUMBER: CAE_CY-G-4018-65926

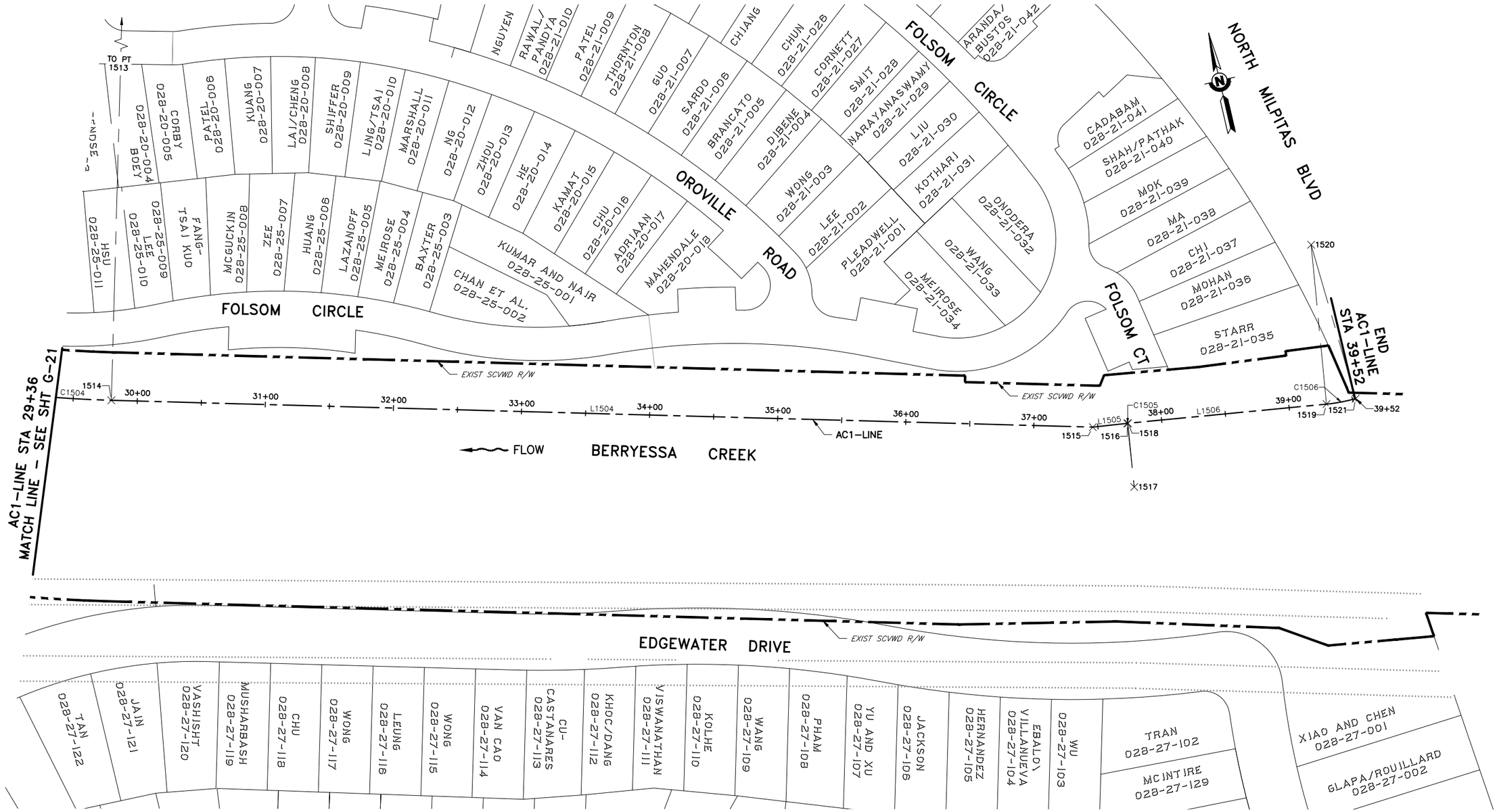

PLAN
SCALE 1" = 40'

REV	DESCRIPTION	DATE	APPR

REFERENCE INFORMATION AND NOTES

1. AERIAL PHOTOGRAPHY WAS TAKEN JULY 2008.
2. SEE SHTS G-25 & G-26 FOR POINT DATA, LINE DATA AND CURVE DATA TABLES.

DATE 12/30/2020
DESIGN Y. LEE
DRAWN J. FORD
CHECKED Y. LEE

ENGINEERING CERTIFICATION
REGISTERED PROFESSIONAL ENGINEER YOUHAN LEE No. C42456 CIVIL STATE OF CALIFORNIA
PROJECT ENGINEER 12.30.2020 DATE

SANTA CLARA VALLEY WATER DISTRICT
Valley Water

PROJECT NAME AND SHEET DESCRIPTION:
LOWER CALERA CREEK FLOOD PROTECTION PROJECT
SURVEY LAYOUT AC1-LINE STA 29+36 TO 39+52

SCALE AS SHOWN
VERIFY SCALES 0 1"
IF NOT ONE INCH ON ORIGINAL DRAWING IF NOT ONE INCH ON THIS SHEET, ADJUST SCALES ACCORDINGLY

PROJECT NUMBER 40174005
SHEET CODE: G-22
SHEET NUMBER: 22 OF 144

DOCUMENT NUMBER: CAE_CY-G-4018-65927

USERNAME: Jennford 12/23/2020 4:00 PM
FILENAME: K:\Active Projects\MP-40174005\Lower Calera Creek Project\SHEETS\G-22.dwg

Attachment 4
Page 22 of 144

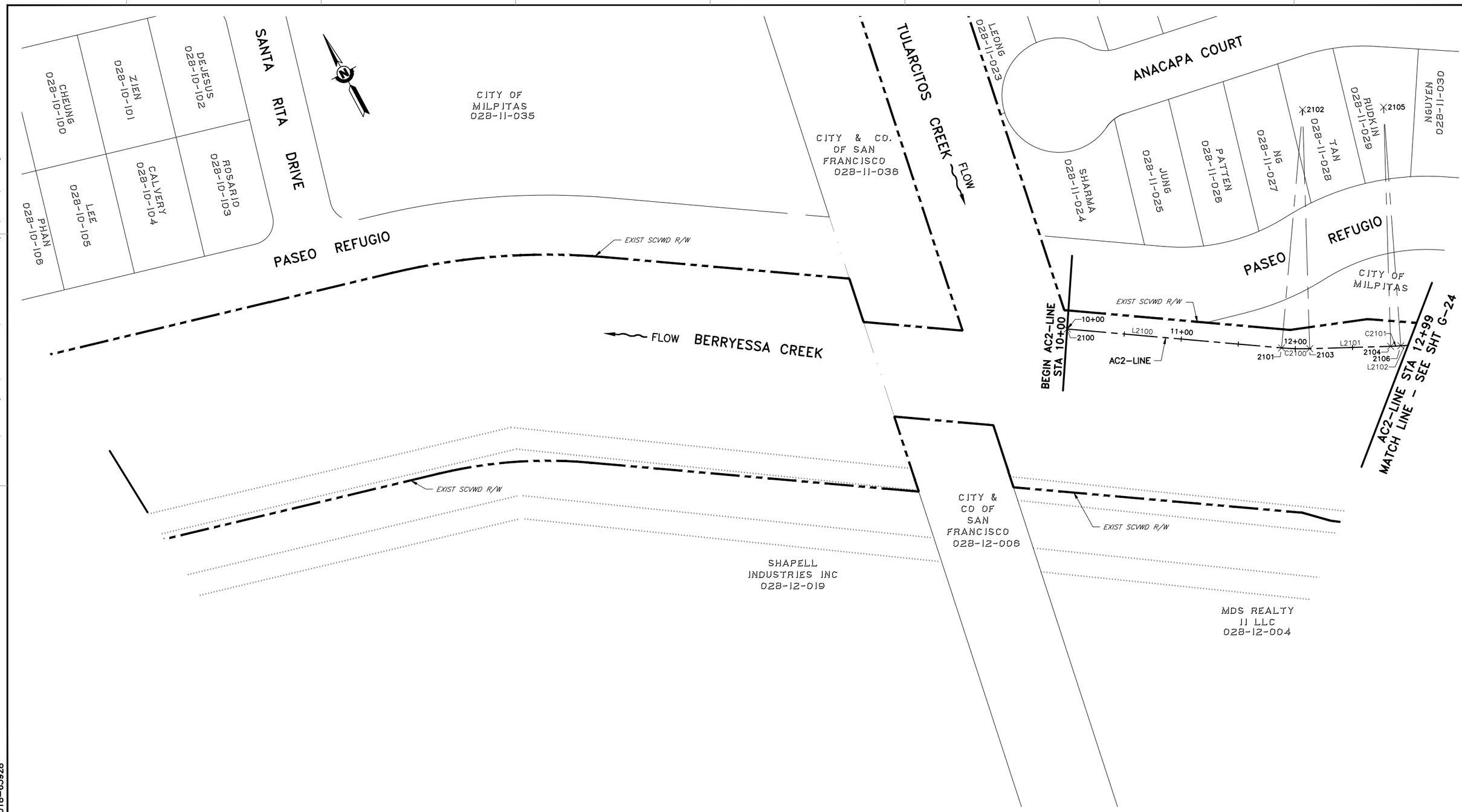

PLAN

SCALE 1" = 40'

REV	DESCRIPTION	DATE	APPR

REFERENCE INFORMATION AND NOTES

1. AERIAL PHOTOGRAPHY WAS TAKEN JULY 2008.
2. SEE SHTS G-25 & G-26 FOR POINT DATA, LINE DATA AND CURVE DATA TABLES.

DATE 12/30/2020
DESIGN Y. LEE
DRAWN J. FORD
CHECKED Y. LEE

ENGINEERING CERTIFICATION
REGISTERED PROFESSIONAL ENGINEER YOUHAN LEE No. C42456 CIVIL STATE OF CALIFORNIA
PROJECT ENGINEER 12.30.2020 DATE

SANTA CLARA VALLEY WATER DISTRICT
Valley Water

PROJECT NAME AND SHEET DESCRIPTION:

LOWER CALERA CREEK FLOOD PROTECTION PROJECT

SURVEY LAYOUT
AC2-LINE STA 10+00 TO 12+99

SCALE AS SHOWN
VERIFY SCALES 0 1"
IF NOT 1" INCH ON ORIGINAL DRAWING IF NOT 1" INCH ON THIS SHEET, ADJUST SCALES ACCORDINGLY

PROJECT NUMBER 40174005
SHEET CODE: G-23
SHEET NUMBER: 23 OF 144

DOCUMENT NUMBER: CAE_CY-G-4018-65928

USERNAME: Jennford 12/23/2020 4:00 PM
FILENAME: K:\Active Projects\MP-40174005\Lower Calera Creek Project\SHEETS\G-23.dwg

Attachment 4
Page 23 of 144

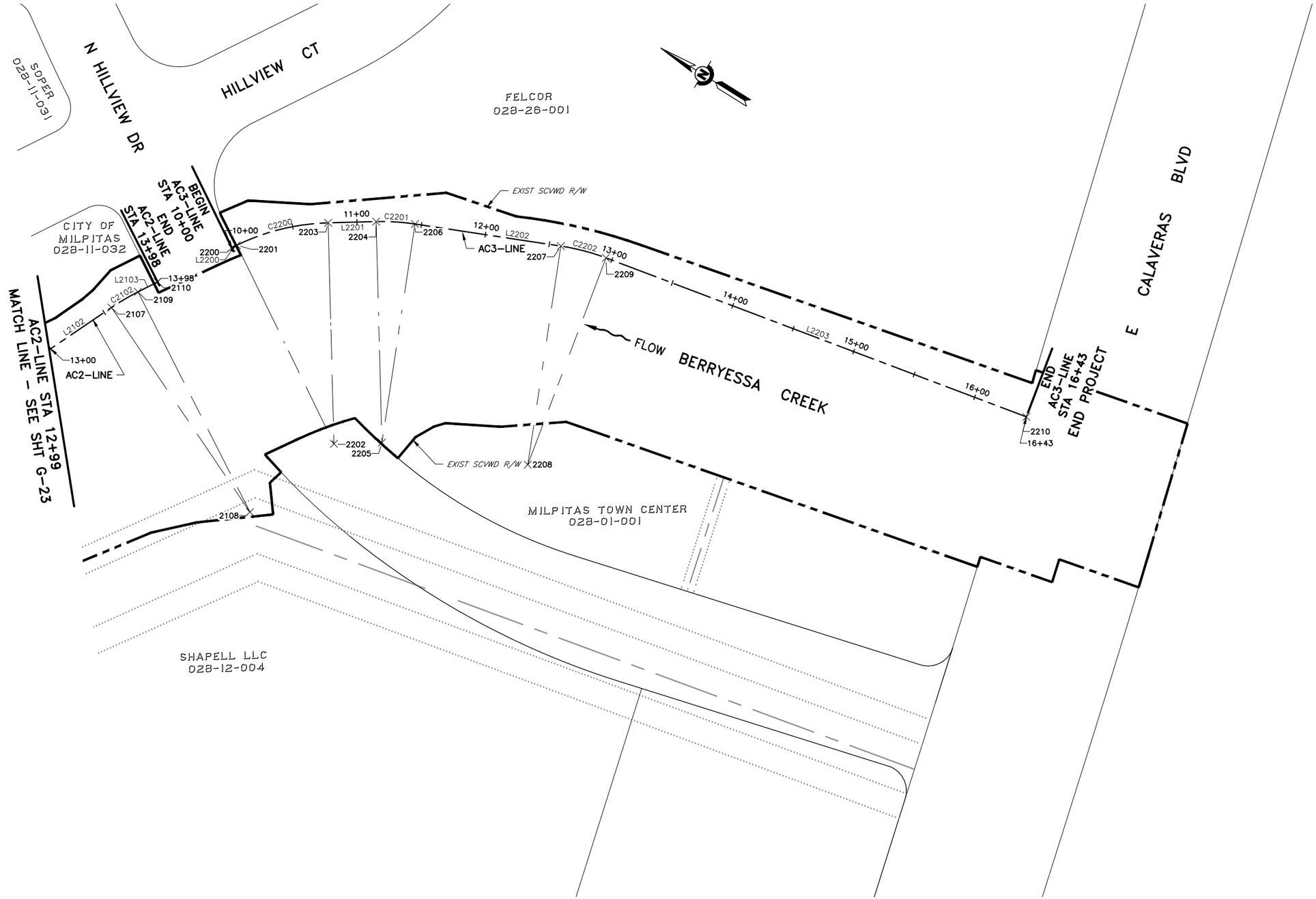

PLAN

SCALE 1" = 40'

REV	DESCRIPTION	DATE	APPR

REFERENCE INFORMATION AND NOTES

1. AERIAL PHOTOGRAPHY WAS TAKEN JULY 2008.
2. SEE SHTS G-25 & G-26 FOR POINT DATA, LINE DATA AND CURVE DATA TABLES.

DATE 12/30/2020
DESIGN Y. LEE
DRAWN J. FORD
CHECKED Y. LEE

ENGINEERING CERTIFICATION

REGISTERED PROFESSIONAL ENGINEER YOUHAN LEE No. C42456 CIVIL STATE OF CALIFORNIA

PROJECT ENGINEER 12.30.2020 DATE

SANTA CLARA VALLEY WATER DISTRICT

Valley Water

PROJECT NAME AND SHEET DESCRIPTION:

LOWER CALERA CREEK
FLOOD PROTECTION PROJECT

SURVEY LAYOUT
AC2-LINE STA 12+99 TO 13+98 AND
AC3-LINE STA 10+00 TO 16+43

SCALE: AS SHOWN

VERIFY SCALES 0 1"
IF NOT ONE INCH ON ORIGINAL DRAWING IF NOT ONE INCH ON THIS SHEET, ADJUST SCALES ACCORDINGLY

PROJECT NUMBER: 40174005

SHEET CODE: G-24

SHEET NUMBER: 24 OF 144

DOCUMENT NUMBER: CAE_CY-G-4018-65929

USERNAME: Jennford 12/23/2020 4:00 PM
FILENAME: K:\Active Projects\MP-40174005\Lower Calera Creek Project\SHEETS\G-24.dwg

Attachment 4
Page 24 of 144

SURVEY CONTROL POINTS TABLE

POINT	NORTHING	EASTING	ELEVATION	DESCRIPTION
276	1988019.83	6152671.65	21.47	BRASS DISK ON TOP AND BACK OF SIDEWALK; 50 FEET NORTHWEST OF INTERSECTION FOR N. MILPITAS BOULEVARD AND HANSON COURT; 1 FOOT EAST OF FACE OF CONCRETE HEADWALL; CENTER OF CALERA CREEK
BM1042	—	—	16.04	USCGS BRASS DISK (M874), ON TOP OF HEADWALL AT NORTHWEST CORNER BRIDGE FOR RAILROAD COURT OVER WRIGLEY FORD CREEK; 250 FEET NORTH FROM INTERSECTION OF RAILROAD COURT AND N. MAIN STREET 400 FEET NORTH OF THE INTERSECTION OF THE SOUTHERN PACIFIC RAILROAD CROSSING AND MAIN STREET (THE OLD OAKLAND–SAN JOSE ROAD).
BM1188	1984803.01	6154916.19	27.05	BRASS DISK ON TOP OF CONCRETE SIDEWALK AT THE SOUTHEAST CORNER OF INTERSECTION FOR BERRYESSA CREEK AT NORTH MILPITAS BOULEVARD. DISK IS LOCATED AT CENTER OF SIDEWALK
20410	1986929.55	6151260.97	12.64	BD W/ PUNCH IN MON BOX @ HERMINA ST / LA HONDA DR
20411	1986947.14	6151578.67	12.81	BD W/ PUNCH IN MON BOX @ 329 LA HONDA DR
20412	1986993.64	6151792.58	12.85	BD W/ PUNCH IN MON BOX @ 297 LA HONDA DR
20414	1987332.94	6151957.24	13.54	BD W/ PUNCH IN MON BOX @ PESCADERO ST / LAGUNA DR
20418	1986651.35	6152223.97	13.86	BD W/ PUNCH IN MON BOX @ PESCADERO ST / COYOTE ST
20479	1988013.78	6152746.03	19.48	BD W/ PUNCH IN MON BOX @ N MILPITAS BLVD / HANSON CT
20482	1988598.43	6151557.55	13.98	BD W/ PUNCH IN MON BOX @ BALBOA DR / SEASIDE WAY
20485	1988117.32	6151887.25	14.42	BD W/ PUNCH IN MON BOX @ 154 SUMMERWIND DR
20486	1988080.67	6151221.00	16.58	BD W/ PUNCH IN MON BOX @ 266 SUMMERWIND DR
20487	1988394.87	6151057.26	14.85	BD W/ PUNCH IN MON BOX @ 279 BALBOA DR
20636	1987253.02	6152757.30	15.70	BD IN MON BOX IN CUL DE SAC AT END OF HANSON CT
20669	1987066.44	6151104.41	20.50	SET REBAR/CAP ON LOWER PENITENCIA CREEK, CENTERLINE EAST LEVEE ROAD, ~500FT SOUTH OF SAN ANDREAS DR BRIDGE
20670	1987557.01	6151069.26	20.39	SET REBAR/CAP ON LOWER PENITENCIA CREEK, CENTERLINE EAST LEVEE ROAD, ~50FT SOUTH OF SAN ANDREAS DR BRIDGE
20671	1987734.12	6151043.70	20.25	SET REBAR/CAP ON LOWER PENITENCIA CREEK, ON EAST LEVEE @ TOP OF ACCESS RAMP INTO CREEK, ~50FT NORTH OF SAN ANDREAS DR BRIDGE
20672	1987907.79	6151031.02	17.35	FND CAP/TACK @ CONFLUENCE OF LOWER PENITENCIA CREEK AND BERRYESSA CREEK, ~100FT NORTH OF SOUTH/EAST LEVEE
20673	1987831.08	6151520.67	18.32	SET REBAR/CAP ON BERRYESSA CREEK, CENTERLINE RIGHT LEVEE, BETWEEN LOWER PENITENCIA CREEK CONFLUENCE AND N. ABEL STREET
20674	1987846.12	6151827.56	19.35	SET REBAR/CAP ON BERRYESSA CREEK, CENTERLINE RIGHT LEVEE, BETWEEN LOWER PENITENCIA CREEK CONFLUENCE AND N. ABEL STREET
20675	1987802.24	6151936.02	19.54	SET REBAR/CAP ON BERRYESSA CREEK, CENTERLINE RIGHT LEVEE, BETWEEN LOWER PENITENCIA CREEK CONFLUENCE AND N. ABEL STREET
20676	1987247.70	6152157.20	19.52	SET REBAR/CAP ON BERRYESSA CREEK, CENTERLINE RIGHT LEVEE, BETWEEN LOWER PENITENCIA CREEK CONFLUENCE AND N. ABEL STREET
20677	1986747.00	6152350.66	19.73	SET REBAR/CAP ON BERRYESSA CREEK, CENTERLINE RIGHT LEVEE, BETWEEN LOWER PENITENCIA CREEK CONFLUENCE AND N. ABEL STREET
20678	1986544.59	6152776.99	21.51	REBAR/CAP ON BERRYESSA CREEK, CENTERLINE RIGHT LEVEE, U/S OF RR BRIDGE
20688	1988002.12	6152668.27	20.55	FND MAG (TOWILL #8029) ON CALERA CREEK @ MILPITAS BLVD, IN SIDEWALK AT TOP OF ACCESS RAMP D/S RIGHT
20689	1988036.86	6152873.16	20.29	SET REBAR/CAP ON CALERA CREEK, TOP OF BANK ON RIGHT LEVEE, 60FT U/S OF MILPITAS BLVD

LT BANK LEVEE W/ MAINT RD (AC1–LINE) POINT TABLE

POINT	NORTHING	EASTING	STATION	DESCRIPTION
1500	1986700.3470	6152736.4880	10+00.00	BC
1501	1986762.4577	6152850.6907		RP
1502	1986641.7573	6152802.4059	10+89.98	EC
1503	1986614.2071	6152871.5830	11+64.44	BC
1504	1986493.4326	6152823.4840		RP
1505	1986542.3116	6152943.9450	12+69.26	EC
1506	1986457.8253	6152978.2267	13+60.44	BC
1507	1986408.9464	6152857.7659		RP
1508	1986426.7754	6152986.5373	13+92.66	EC
1509	1986324.3653	6153000.7165	14+96.05	BC
1510	1986420.3678	6153694.1020		RP
1511	1986149.8062	6153048.5043	16+77.54	EC
1512	1985750.3603	6153215.9069	21+10.65	BC
1513	1986115.6185	6154087.4638		RP
1514	1985200.9864	6153849.8231	29+79.80	EC
1515	1985008.2937	6154591.4593	37+46.07	AP
1516	1985005.1103	6154618.2760	37+73.07	BC
1517	1984955.4589	6154612.3819		RP
1518	1985005.0334	6154618.8916	37+73.69	EC
1519	1984984.7738	6154773.1781	39+29.30	BC
1520	1985108.7098	6154789.4524		RP
1521	1984983.8977	6154796.3030	39+52.48	EC

LT BANK LEVEE W/ MAINT RD (AC2–LINE) POINT TABLE

POINT	NORTHING	EASTING	STATION	DESCRIPTION
2100	1984295.7853	6156727.3276	10+00.00	BP
2101	1984193.3024	6156884.9216	11+87.99	BC
2102	1984368.5133	6156998.8608		RP
2103	1984181.1526	6156906.2489	12+12.55	EC
2104	1984149.7773	6156969.7234	12+83.35	BC
2105	1984337.1380	6157062.3353		RP
2106	1984146.0310	6156977.7237	12+92.19	EC
2107	1984119.8749	6157036.8011	13+56.79	BC
2108	1983945.2269	6156959.4766		RP
2109	1984108.8932	6157057.9364	13+80.63	EC
2110	1984100.1293	6157072.5044	13+97.63	EP

LT BANK LEVEE W/ MAINT RD (AC3–LINE) POINT TABLE

POINT	NORTHING	EASTING	STATION	DESCRIPTION
2200	1984065.4738	6157125.3489	10+00.00	BP
2201	1984063.1623	6157129.0563	10+04.37	BC
2202	1983918.0554	6157038.5854		RP
2203	1984012.4313	6157181.1833	10+77.67	EC
2204	1983981.4899	6157201.6614	11+14.77	BC
2205	1983887.1140	6157059.0634		RP
2206	1983954.9943	6157216.0133	11+44.94	EC
2207	1983850.2368	6157261.3206	12+59.08	BC
2208	1983782.3565	6157104.3707		RP
2209	1983815.8267	6157272.0631	12+95.19	EC
2210	1983474.9340	6157340.1030	16+42.81	EP

REV	DESCRIPTION	DATE	APPR

REFERENCE INFORMATION AND NOTES

1. BASIS OF ELEVATION:
   NORTH AMERICAN VERTICAL DATUM 1988, U.S. FEET.
2. BASIS OF BEARING:
   CALIFORNIA COORDINATE SYSTEM, ZONE 3
   NORTH AMERICAN DATUM 1983, U.S. FEET.
3. FOR VERTICAL CONTROL USE ONLY.

DATE 12/30/2020
DESIGN Y. LEE
DRAWN J. FORD
CHECKED Y. LEE

ENGINEERING CERTIFICATION

REGISTERED PROFESSIONAL ENGINEER YOUHAN LEE No. C42456 CIVIL STATE OF CALIFORNIA

PROJECT ENGINEER — DATE 12.30.2020

SANTA CLARA VALLEY WATER DISTRICT

Valley Water

PROJECT NAME AND SHEET DESCRIPTION:

LOWER CALERA CREEK FLOOD PROTECTION PROJECT

SURVEY LAYOUT DATA

SCALE: AS SHOWN

VERIFY SCALES: 0 1" — BAR IS ONE INCH ON ORIGINAL DRAWING IF NOT ONE INCH ON THIS SHEET, ADJUST SCALES ACCORDINGLY

PROJECT NUMBER: 40174005

SHEET CODE: G-25

SHEET NUMBER: 25 OF 144

Attachment 4
Page 25 of 144

USERNAME: Jennford 12/23/2020 4:00 PM
FILENAME: K:\Active Projects\MP-40174005\Lower Calera Creek Project\SHEETS\G-25.dwg
DOCUMENT NUMBER: CAE_CY-G-4018-65930

LT BANK LEVEE W/ MAINT RD (AC1-LINE) LINE TABLE

LINE	LENGTH	BEARING
L1500	74.46	S68°17'05"E
L1501	91.18	S22°05'08"E
L1502	103.39	S7°52'58"E
L1503	433.11	S22°44'17"E
L1504	766.26	S75°26'07"E
L1505	27.00	S83°13'49"E
L1506	155.61	S82°31'09"E

LT BANK LEVEE W/ MAINT RD (AC2-LINE) LINE TABLE

LINE	LENGTH	BEARING
L2100	187.99	S56°57'51"E
L2101	70.81	S63°41'49"E
L2102	64.61	S66°07'08"E
L2103	17.00	S58°58'10"E

LT BANK LEVEE W/ MAINT RD (AC3-LINE) LINE TABLE

LINE	LENGTH	BEARING
L2200	4.37	S58°03'26"E
L2201	37.10	S33°29'52"E
L2202	114.14	S23°23'18"E
L2203	347.62	S11°17'15"E

LT BANK LEVEE W/ MAINT RD (AC1 -LINE) CURVE TABLE

CURVE	RADIUS	LENGTH	DELTA
C1500	130.00	89.98	39°39'23.48"
C1501	130.00	104.82	46°11'57.18"
C1502	130.00	32.23	14°12'10.51"
C1503	700.00	181.49	14°51'18.59"
C1504	945.00	869.16	52°41'50.88"
C1505	50.00	0.62	0°42'39.38"
C1506	125.00	23.17	10°37'20.81"

LT BANK LEVEE W/ MAINT RD (AC2 -LINE) CURVE TABLE

CURVE	RADIUS	LENGTH	DELTA
C2100	209.00	24.56	6°43'57.97"
C2101	209.00	8.83	2°25'19.09"
C2102	191.00	23.83	7°08'58.37"

LT BANK LEVEE W/ MAINT RD (AC3 -LINE) CURVE TABLE

CURVE	RADIUS	LENGTH	DELTA
C2200	171.00	73.30	24°33'34.14"
C2201	171.00	30.17	10°06'34.34"
C2202	171.00	36.12	12°06'02.94"

USERNAME: Jennford 12/23/2020 4:00 PM
FILENAME: K:\Active Projects\MP-40174005\Lower Calera Creek Project\SHEETS\G-26.dwg
DOCUMENT NUMBER: CAE_CY-G-4018-65931

REV	DESCRIPTION	DATE	APPR

REFERENCE INFORMATION AND NOTES
1. BASIS OF ELEVATION: NORTH AMERICAN VERTICAL DATUM 1988, U.S. FEET.
2. BASIS OF BEARING: CALIFORNIA COORDINATE SYSTEM, ZONE 3 NORTH AMERICAN DATUM 1983, U.S. FEET.
3. FOR VERTICAL CONTROL USE ONLY.

DATE 12/30/2020
DESIGN Y. LEE
DRAWN J. FORD
CHECKED Y. LEE

ENGINEERING CERTIFICATION
REGISTERED PROFESSIONAL ENGINEER YOUHAN LEE No. C42456 CIVIL STATE OF CALIFORNIA
PROJECT ENGINEER 12.30.2020 DATE

SANTA CLARA VALLEY WATER DISTRICT
Valley Water

PROJECT NAME AND SHEET DESCRIPTION:
LOWER CALERA CREEK FLOOD PROTECTION PROJECT
SURVEY LAYOUT DATA

SCALE AS SHOWN
VERIFY SCALES 0 1"
IF NOT ONE INCH ON ORIGINAL DRAWING IF NOT ONE INCH ON THIS SHEET, ADJUST SCALES ACCORDINGLY

PROJECT NUMBER 40174005
SHEET CODE: G-26
SHEET NUMBER: 26 OF 144

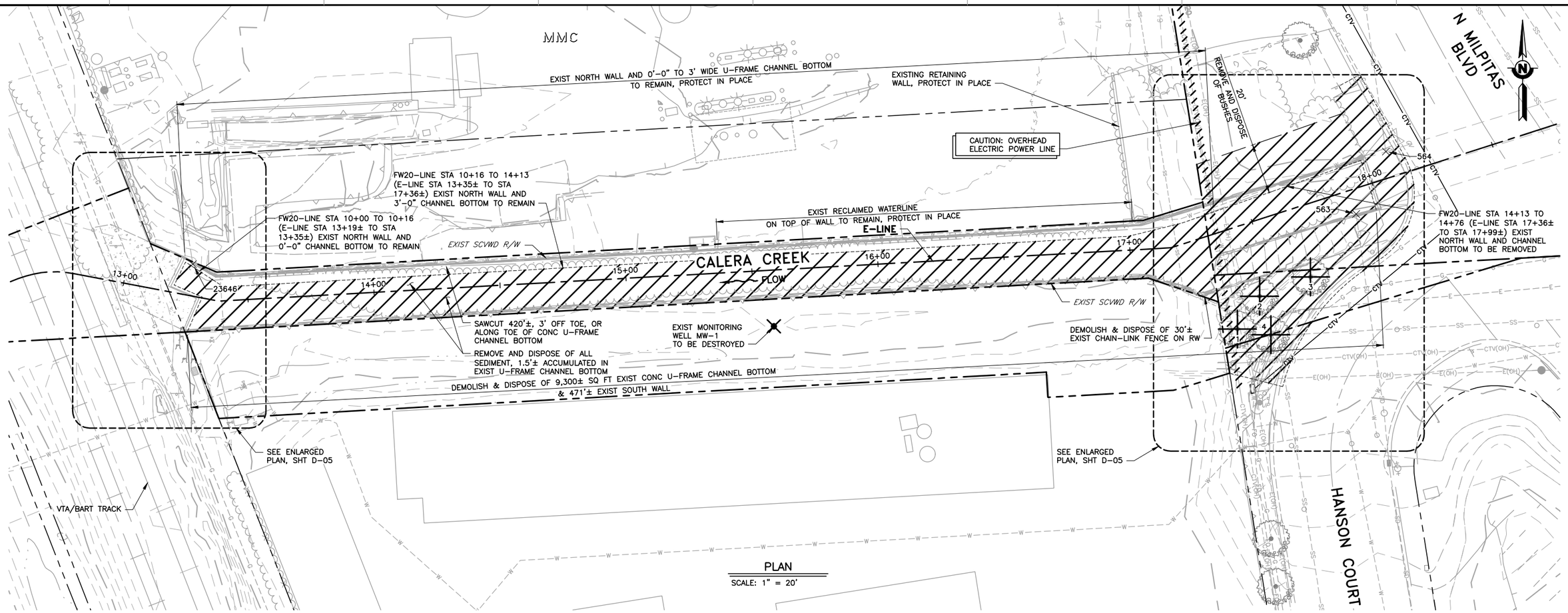

PLAN

SCALE: 1" = 20'

NOTES:

1. THE CONTRACTOR SHALL MAINTAIN PEDESTRIAN, VEHICULAR, AND BUS STOP ACCESS AT ALL TIMES.
2. SIDEWALK & CURB RAMP CONSTRUCTION/CLOSURES:
   a. WHERE SIDEWALK AND CURB RAMPS ARE CLOSED FOR CONSTRUCTION, THE CONTRACTOR SHALL PROVIDE A CONTINUOUS SAFE, AND ADA COMPLIANT PEDESTRIAN PATH OF TRAVEL AT ALL TIMES. THE PATH OF TRAVEL SHALL BE WITHIN THE IMMEDIATE LOCATION OF THE WORK.
   b. CLOSURES WILL BE PERMITTED ON ONE SIDE OF A STREET AT A TIME FROM INTERSECTION TO INTERSECTION WITH APPROPRIATE DETOUR SIGNAGE. AT STREET INTERSECTIONS, THE CONTRACTOR SHALL MAINTAIN AN ADA COMPLIANT PATH OF TRAVEL THROUGH AND AROUND THE INTERSECTION.
   c. WHERE IMMEDIATE ALTERNATE PEDESTRIAN PATH OF TRAVEL CANNOT BE PROVIDED, THE CONTRACTOR SHALL PROVIDE ADA COMPLIANT PEDESTRIAN DETOUR(S). IT SHALL BE CLEARLY PLANNED, MARKED, CONSTRUCTED AND APPROVED BY THE CITY ENGINEER. APPROPRIATE SIGNS AND BARRICADES MUST BE INSTALLED AT THE LIMITS OF CONSTRUCTION AND IN ADVANCE OF THE CLOSURE (OR DETOUR) IN ORDER TO DIVERT PEDESTRIANS TO THE APPROPRIATE WALKWAY OR DETOUR.
   d. CONTRACTOR SHALL SUBMIT SIDEWALK CLOSURE AND DETOUR PLAN TO THE CITY PROJECT ENGINEER FOR REVIEW AND APPROVAL. PLAN(S) SHALL SHOW, BUT NOT LIMITED TO, CLOSURES, PEDESTRIAN ROUTING, AND SIGNAGE.

POINT TABLE

POINT	NORTHING	EASTING	DESCRIPTION
563	1988007.1390	6152664.0010	CMP
564	1988031.8890	6152675.7950	RCP
23646	1987987.2250	6152203.0550	RCP

REV	DESCRIPTION	DATE	APPR	REFERENCE INFORMATION AND NOTES
				.

DATE 12/30/2020
DESIGN Y. LEE
DRAWN R. STILL
CHECKED Y. LEE

ENGINEERING CERTIFICATION
REGISTERED PROFESSIONAL ENGINEER TOUHAN LEE No. C42456 CIVIL STATE OF CALIFORNIA
PROJECT ENGINEER 12.30.2020 DATE

SANTA CLARA VALLEY WATER DISTRICT
Valley Water

PROJECT NAME AND SHEET DESCRIPTION:
LOWER CALERA CREEK
FLOOD PROTECTION PROJECT
DEMOLISH PLAN

SCALE AS SHOWN
VERIFY SCALES 0 1"
IF NOT ONE INCH ON ORIGINAL DRAWING, ADJUST SCALES ACCORDINGLY

PROJECT NUMBER 40174005
SHEET CODE: D-01
SHEET NUMBER: 27 OF 144

DOCUMENT NUMBER: CAE_CY-D-4018-65932

USERNAME: Jennford 12/24/2020 8:41 AM
FILENAME: K:\Active Projects\MP-40174005\Lower Calera Creek Project\SHEETS\D-01.dwg

Attachment 4
Page 27 of 144

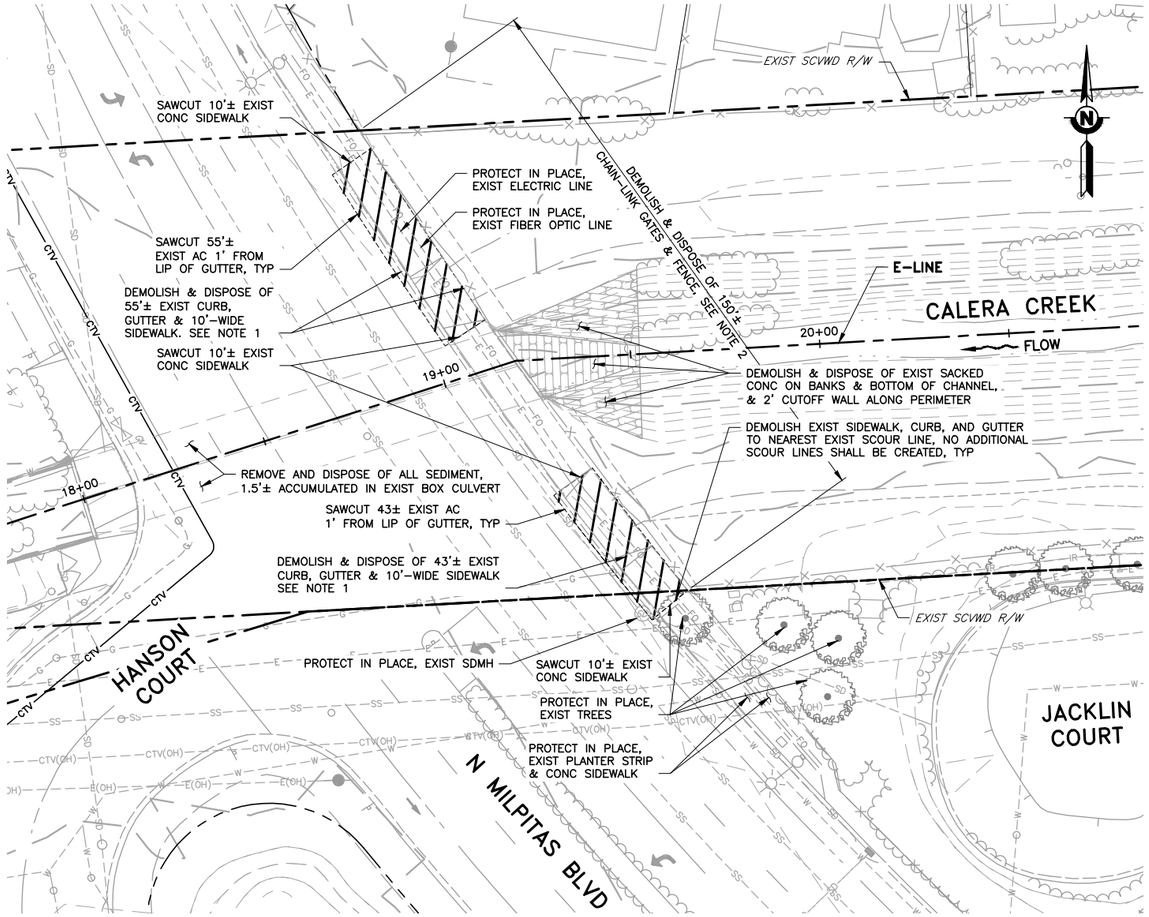

PLAN

SCALE: 1" = 20'

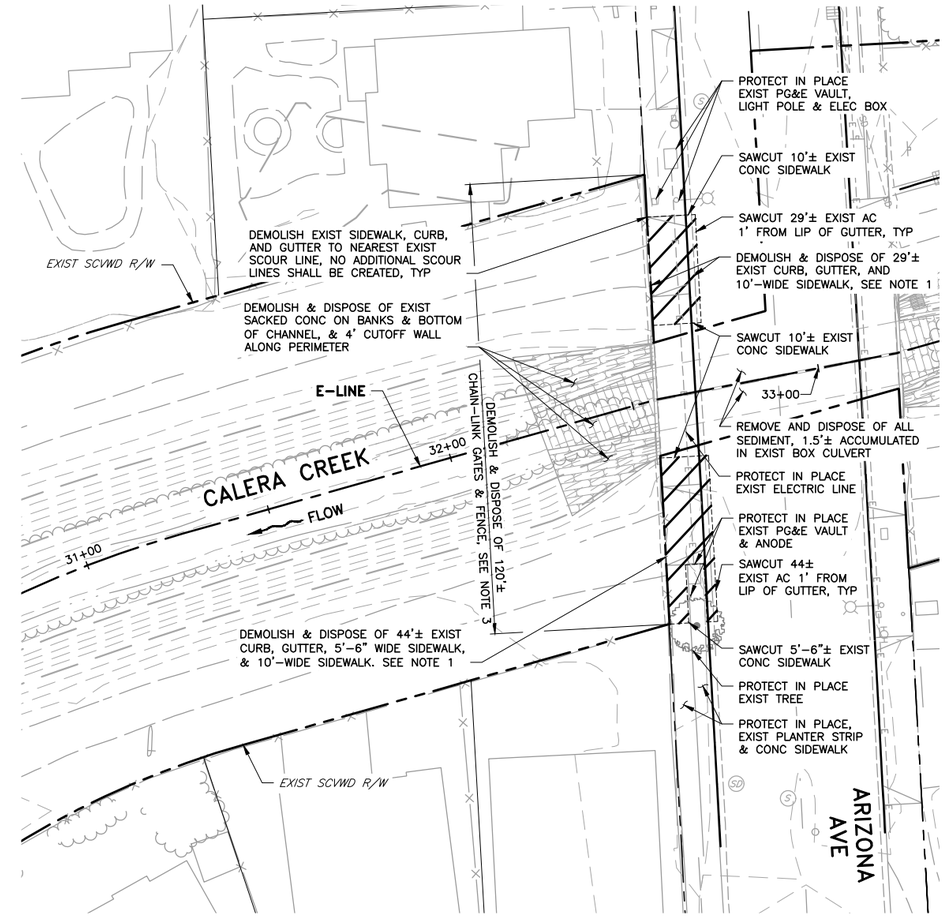

PLAN

SCALE: 1" = 20'

NOTES:

1. THE CONTRACTOR SHALL MAINTAIN PEDESTRIAN, VEHICULAR, AND BUS STOP ACCESS AT ALL TIMES.
2. SIDEWALK & CURB RAMP CONSTRUCTION/CLOSURES:
   a. WHERE SIDEWALK AND CURB RAMPS ARE CLOSED FOR CONSTRUCTION, THE CONTRACTOR SHALL PROVIDE A CONTINUOUS SAFE, AND ADA COMPLIANT PEDESTRIAN PATH OF TRAVEL AT ALL TIMES. THE PATH OF TRAVEL SHALL BE WITHIN THE IMMEDIATE LOCATION OF THE WORK.
   b. CLOSURES WILL BE PERMITTED ON ONE SIDE OF A STREET AT A TIME FROM INTERSECTION TO INTERSECTION WITH APPROPRIATE DETOUR SIGNAGE. AT STREET INTERSECTIONS, THE CONTRACTOR SHALL MAINTAIN AN ADA COMPLIANT PATH OF TRAVEL THROUGH AND AROUND THE INTERSECTION.
   c. WHERE IMMEDIATE ALTERNATE PEDESTRIAN PATH OF TRAVEL CANNOT BE PROVIDED, THE CONTRACTOR SHALL PROVIDE ADA COMPLIANT PEDESTRIAN DETOUR(S). IT SHALL BE CLEARLY PLANNED, MARKED, CONSTRUCTED AND APPROVED BY THE CITY ENGINEER. APPROPRIATE SIGNS AND BARRICADES MUST BE INSTALLED AT THE LIMITS OF CONSTRUCTION AND IN ADVANCE OF THE CLOSURE (OR DETOUR) IN ORDER TO DIVERT PEDESTRIANS TO THE APPROPRIATE WALKWAY OR DETOUR.
   d. CONTRACTOR SHALL SUBMIT SIDEWALK CLOSURE AND DETOUR PLAN TO THE CITY PROJECT ENGINEER FOR REVIEW AND APPROVAL. PLAN(S) SHALL SHOW, BUT NOT LIMITED TO, CLOSURES, PEDESTRIAN ROUTING, AND SIGNAGE.

REV	DESCRIPTION	DATE	APPR

REFERENCE INFORMATION AND NOTES
1. ONLY ONE SIDE SIDEWALK SHALL BE REMOVED AT A TIME TO MAINTAIN ONE SIDE SIDEWALK OPEN.
2. REMOVE AND SALVAGE 2 SIGNS FASTENED ON GATES.
3. REMOVE AND SALVAGE 4 SIGNS FASTENED ON GATES.

DATE 12/30/2020
DESIGN Y. LEE
DRAWN R. STILL
CHECKED Y. LEE

ENGINEERING CERTIFICATION
REGISTERED PROFESSIONAL ENGINEER TOUHAN LEE No. C42456 CIVIL STATE OF CALIFORNIA
12.30.2020
PROJECT ENGINEER DATE

SANTA CLARA VALLEY WATER DISTRICT
Valley Water

PROJECT NAME AND SHEET DESCRIPTION:
LOWER CALERA CREEK FLOOD PROTECTION PROJECT
DEMOLISH PLAN

SCALE: AS SHOWN
VERIFY SCALES: 0 1"
FOR 1 INCH ON ORIGINAL DRAWING IF NOT ONE INCH ON THIS SHEET, ADJUST SCALES ACCORDINGLY

PROJECT NUMBER: 40174005
SHEET CODE: D-02
SHEET NUMBER: 28 OF 144

Attachment 4
Page 28 of 144

USERNAME: Jennford 12/24/2020 8:48 AM
FILENAME: K:\Active Projects\MP-40174005\Lower Calera Creek Project\SHEETS\D-02.dwg
DOCUMENT NUMBER: CAE_CY-D-4018-65933

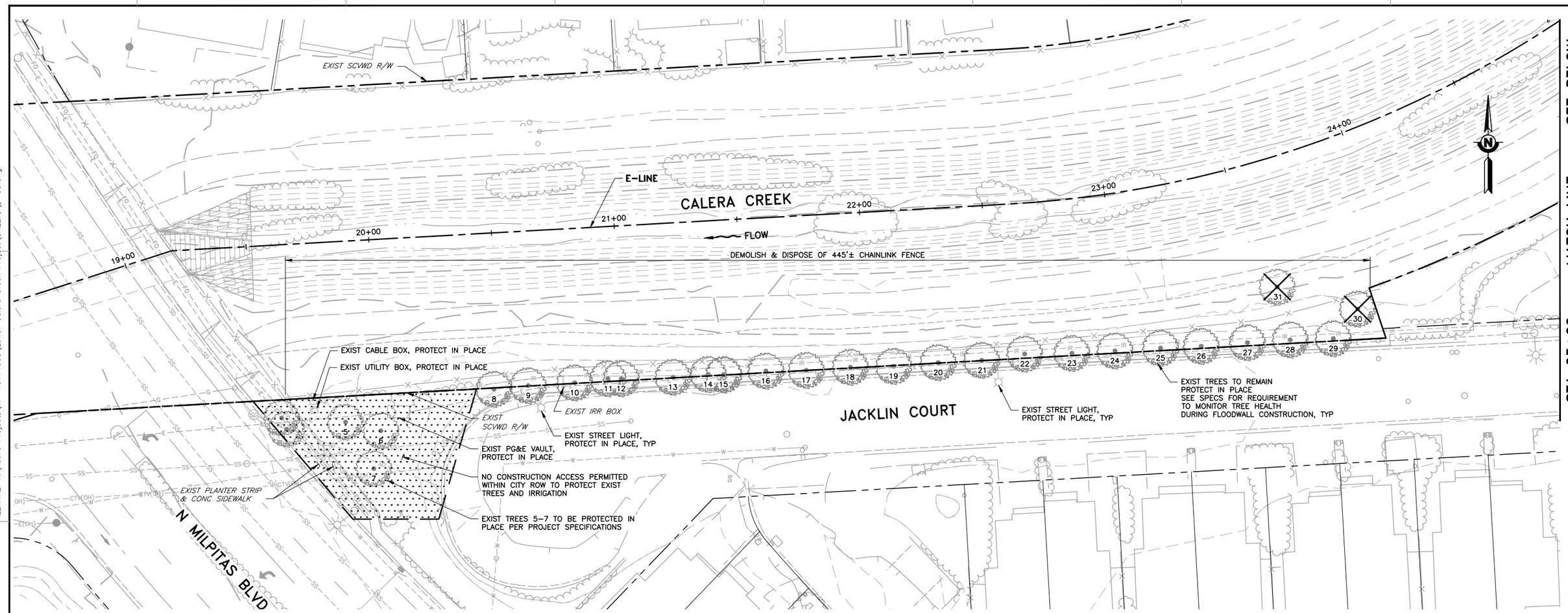

PLAN

SCALE: 1" = 20'

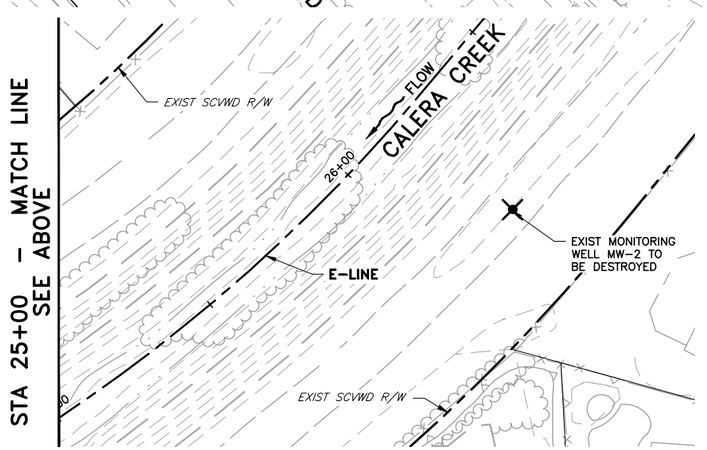

PLAN

SCALE: 1" = 20'

TREE PRESERVATION TABLE		
NO	DESCRIPTION	DBH (IN)
5	COAST REDWOOD	20
6	COAST REDWOOD	18
7	COAST REDWOOD	18
8	RIVER SHE–OAK	18
9	RIVER SHE–OAK	16
10	RIVER SHE–OAK	18
11	RIVER SHE–OAK	14
12	RIVER SHE–OAK	14
13	RIVER SHE–OAK	12
14	RIVER SHE–OAK	12
15	RIVER SHE–OAK	18
16	RIVER SHE–OAK	14
17	RIVER SHE–OAK	14
18	RIVER SHE–OAK	18
19	RIVER SHE–OAK	14
20	RIVER SHE–OAK	13

TREE PRESERVATION TABLE		
NO	DESCRIPTION	DBH (IN)
21	RIVER SHE–OAK	13
22	RIVER SHE–OAK	14
23	RIVER SHE–OAK	13
24	RIVER SHE–OAK	14
25	RIVER SHE–OAK	12
26	RIVER SHE–OAK	16
27	RIVER SHE–OAK	14
28	RIVER SHE–OAK	16
29	RIVER SHE–OAK	16

TREE REMOVAL TABLE		
NO	DESCRIPTION	DBH (IN)
30	MONTEREY PINE STUMP	28
31	MONTEREY PINE	16

LEGEND

REMOVE TREE AND STUMP

REV	DESCRIPTION	DATE	APPR	REFERENCE INFORMATION AND NOTES

DATE 12/30/2020
DESIGN Y. LEE
DRAWN R. STILL
CHECKED Y. LEE

ENGINEERING CERTIFICATION

REGISTERED PROFESSIONAL ENGINEER TOUHAN LEE No. C42456 CIVIL STATE OF CALIFORNIA

PROJECT ENGINEER — DATE 12.30.2020

SANTA CLARA VALLEY WATER DISTRICT

Valley Water

PROJECT NAME AND SHEET DESCRIPTION:

LOWER CALERA CREEK FLOOD PROTECTION PROJECT

DEMOLITION PLAN

SCALE: AS SHOWN

VERIFY SCALES: 0 — 1"

PLOT ONE INCH ON ORIGINAL DRAWING IF NOT ONE INCH ON THIS SHEET, ADJUST SCALES ACCORDINGLY

PROJECT NUMBER: 40174005

SHEET CODE: D–03

SHEET NUMBER: 29 OF 144

Attachment 4
Page 29 of 144

USERNAME: Jennford 12/24/2020 8:56 AM
FILENAME: K:\Active Projects\MP–40174005\Lower Calera Creek Project\SHEETS\D–03.dwg
DOCUMENT NUMBER: CAE_CY–D–4018–65934

POINT TABLE			
POINT	NORTHING	EASTING	DESCRIPTION
466	1988634.9070	6153992.1240	CMP

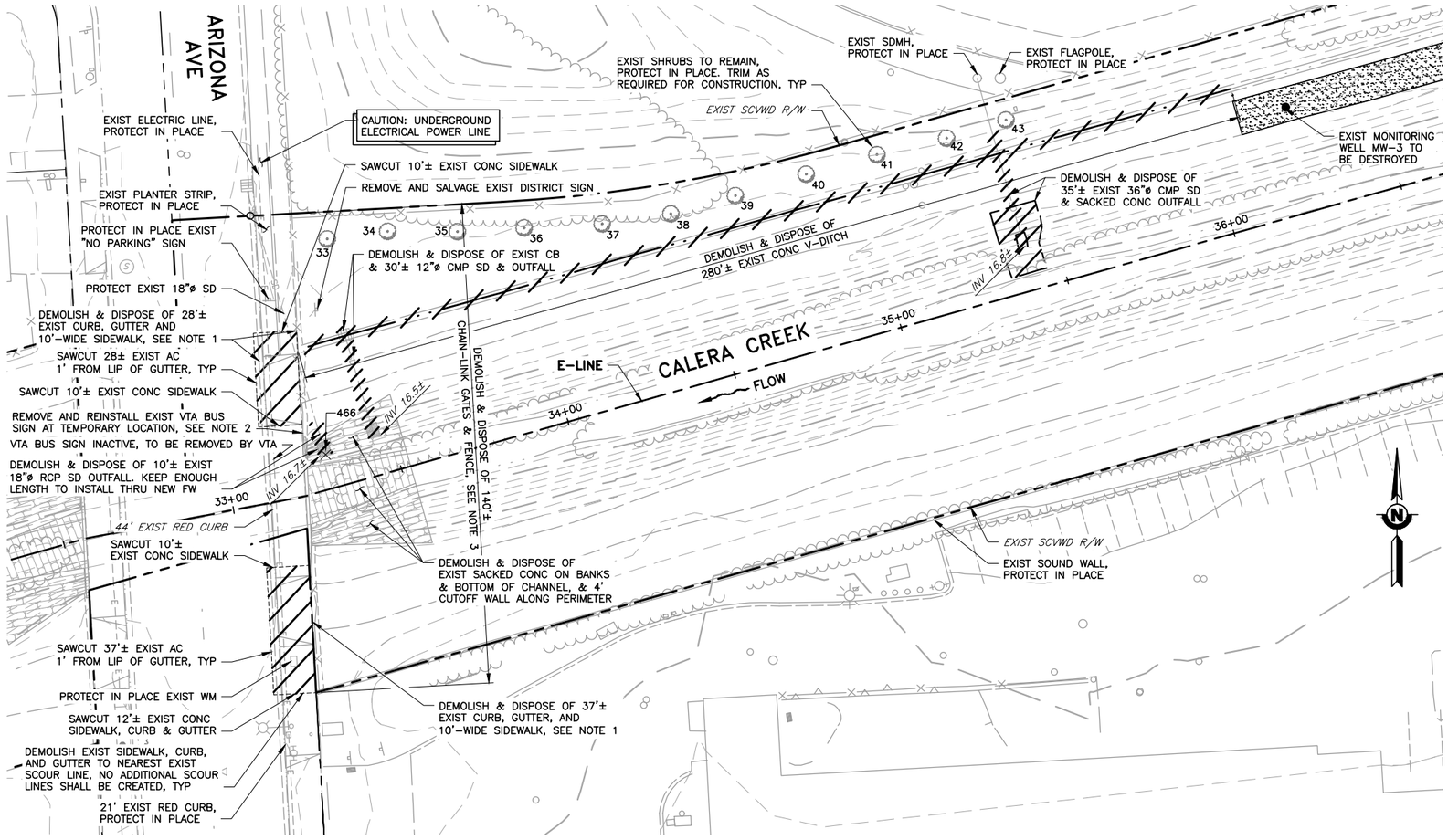

PLAN

SCALE: 1" = 20'

NOTES:

1. THE CONTRACTOR SHALL MAINTAIN PEDESTRIAN, VEHICULAR, AND BUS STOP ACCESS AT ALL TIMES.
2. SIDEWALK & CURB RAMP CONSTRUCTION/CLOSURES:
   a. WHERE SIDEWALK AND CURB RAMPS ARE CLOSED FOR CONSTRUCTION, THE CONTRACTOR SHALL PROVIDE A CONTINUOUS SAFE, AND ADA COMPLIANT PEDESTRIAN PATH OF TRAVEL AT ALL TIMES. THE PATH OF TRAVEL SHALL BE WITHIN THE IMMEDIATE LOCATION OF THE WORK.
   b. CLOSURES WILL BE PERMITTED ON ONE SIDE OF A STREET AT A TIME FROM INTERSECTION TO INTERSECTION WITH APPROPRIATE DETOUR SIGNAGE. AT STREET INTERSECTIONS, THE CONTRACTOR SHALL MAINTAIN AN ADA COMPLIANT PATH OF TRAVEL THROUGH AND AROUND THE INTERSECTION.
   c. WHERE IMMEDIATE ALTERNATE PEDESTRIAN PATH OF TRAVEL CANNOT BE PROVIDED, THE CONTRACTOR SHALL PROVIDE ADA COMPLIANT PEDESTRIAN DETOUR(S). IT SHALL BE CLEARLY PLANNED, MARKED, CONSTRUCTED AND APPROVED BY THE CITY ENGINEER. APPROPRIATE SIGNS AND BARRICADES MUST BE INSTALLED AT THE LIMITS OF CONSTRUCTION AND IN ADVANCE OF THE CLOSURE (OR DETOUR) IN ORDER TO DIVERT PEDESTRIANS TO THE APPROPRIATE WALKWAY OR DETOUR.
   d. CONTRACTOR SHALL SUBMIT SIDEWALK CLOSURE AND DETOUR PLAN TO THE CITY PROJECT ENGINEER FOR REVIEW AND APPROVAL. PLAN(S) SHALL SHOW, BUT NOT LIMITED TO, CLOSURES, PEDESTRIAN ROUTING, AND SIGNAGE.

REV	DESCRIPTION	DATE	APPR

REFERENCE INFORMATION AND NOTES

1. ONLY ONE SIDE SIDEWALK SHALL BE REMOVED AT A TIME TO MAINTAIN ONE SIDE SIDEWALK OPEN.
2. CONTRACTOR TO COORDINATE WITH VTA FOR TEMPORARY LOCATION OF BUS STOP DURING CONSTRUCTION.ONLY ONE SIDE SIDEWALK SHALL BE REMOVED AT A TIME TO MAINTAIN ONE SIDE SIDEWALK OPEN.
3. REMOVE AND SALVAGE 4 SIGNS FASTENED ON GATES.

DATE 12/30/2020
DESIGN Y. LEE
DRAWN R. STILL
CHECKED Y. LEE

ENGINEERING CERTIFICATION

REGISTERED PROFESSIONAL ENGINEER TOUHAN LEE No. C42456 CIVIL STATE OF CALIFORNIA

PROJECT ENGINEER 12.30.2020 DATE

SANTA CLARA VALLEY WATER DISTRICT

Valley Water

PROJECT NAME AND SHEET DESCRIPTION:

LOWER CALERA CREEK FLOOD PROTECTION PROJECT

DEMOLITION PLAN

SCALE: AS SHOWN

VERIFY SCALES: 0 1" IF NOT ONE INCH ON ORIGINAL DRAWING, ADJUST SCALES ACCORDINGLY

PROJECT NUMBER: 40174005

SHEET CODE: D-04

SHEET NUMBER: 30 OF 144

DOCUMENT NUMBER: CAE_CY-D-4018-65935

USERNAME: Jennford 12/24/2020 9:05 AM
FILENAME: K:\Active Projects\MP-40174005\Lower Calera Creek Project\SHEETS\D-04.dwg

Attachment 4
Page 30 of 144

NOTES:

1. THE CONTRACTOR SHALL MAINTAIN PEDESTRIAN, VEHICULAR, AND BUS STOP ACCESS AT ALL TIMES.
2. SIDEWALK & CURB RAMP CONSTRUCTION/CLOSURES:
   a. WHERE SIDEWALK AND CURB RAMPS ARE CLOSED FOR CONSTRUCTION, THE CONTRACTOR SHALL PROVIDE A CONTINUOUS SAFE, AND ADA COMPLIANT PEDESTRIAN PATH OF TRAVEL AT ALL TIMES. THE PATH OF TRAVEL SHALL BE WITHIN THE IMMEDIATE LOCATION OF THE WORK.
   b. CLOSURES WILL BE PERMITTED ON ONE SIDE OF A STREET AT A TIME FROM INTERSECTION TO INTERSECTION WITH APPROPRIATE DETOUR SIGNAGE. AT STREET INTERSECTIONS, THE CONTRACTOR SHALL MAINTAIN AN ADA COMPLIANT PATH OF TRAVEL THROUGH AND AROUND THE INTERSECTION.
   c. WHERE IMMEDIATE ALTERNATE PEDESTRIAN PATH OF TRAVEL CANNOT BE PROVIDED, THE CONTRACTOR SHALL PROVIDE ADA COMPLIANT PEDESTRIAN DETOUR(S). IT SHALL BE CLEARLY PLANNED, MARKED, CONSTRUCTED AND APPROVED BY THE CITY ENGINEER. APPROPRIATE SIGNS AND BARRICADES MUST BE INSTALLED AT THE LIMITS OF CONSTRUCTION AND IN ADVANCE OF THE CLOSURE (OR DETOUR) IN ORDER TO DIVERT PEDESTRIANS TO THE APPROPRIATE WALKWAY OR DETOUR.
   d. CONTRACTOR SHALL SUBMIT SIDEWALK CLOSURE AND DETOUR PLAN TO THE CITY PROJECT ENGINEER FOR REVIEW AND APPROVAL. PLAN(S) SHALL SHOW, BUT NOT LIMITED TO, CLOSURES, PEDESTRIAN ROUTING, AND SIGNAGE.
3. "CAUTION: EXISTING WATER MAIN UNDER THE VTA/BART TRACKS IS ACP PIPE AND SHALL BE PROTECTED IN PLACE AT ALL COSTS. CONTRACTOR SHALL CONTACT THE CITY'S INSPECTOR 48-HOURS PRIOR TO START OF ANY WORK NEAR THE WATER MAIN AND BE PRESENT DURING CONSTRUCTION."

TREE REMOVAL TABLE

NO	DESCRIPTION	DIAMETER (IN)
1	DEODAR CEDAR	20
2	DEODAR CEDAR	17
3	DEODAR CEDAR	19
4	DEODAR CEDAR	17

LEGEND

REMOVE TREE AND STUMP

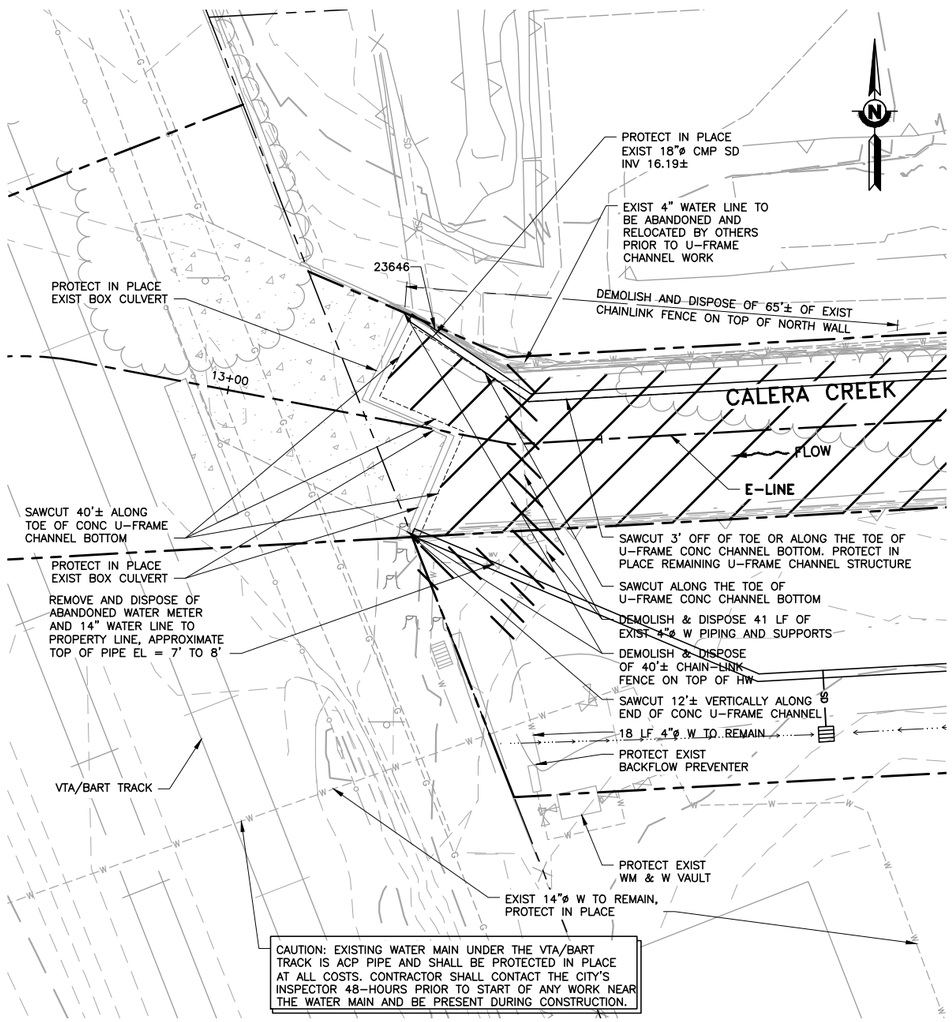

PLAN

SCALE: 1" = 10'

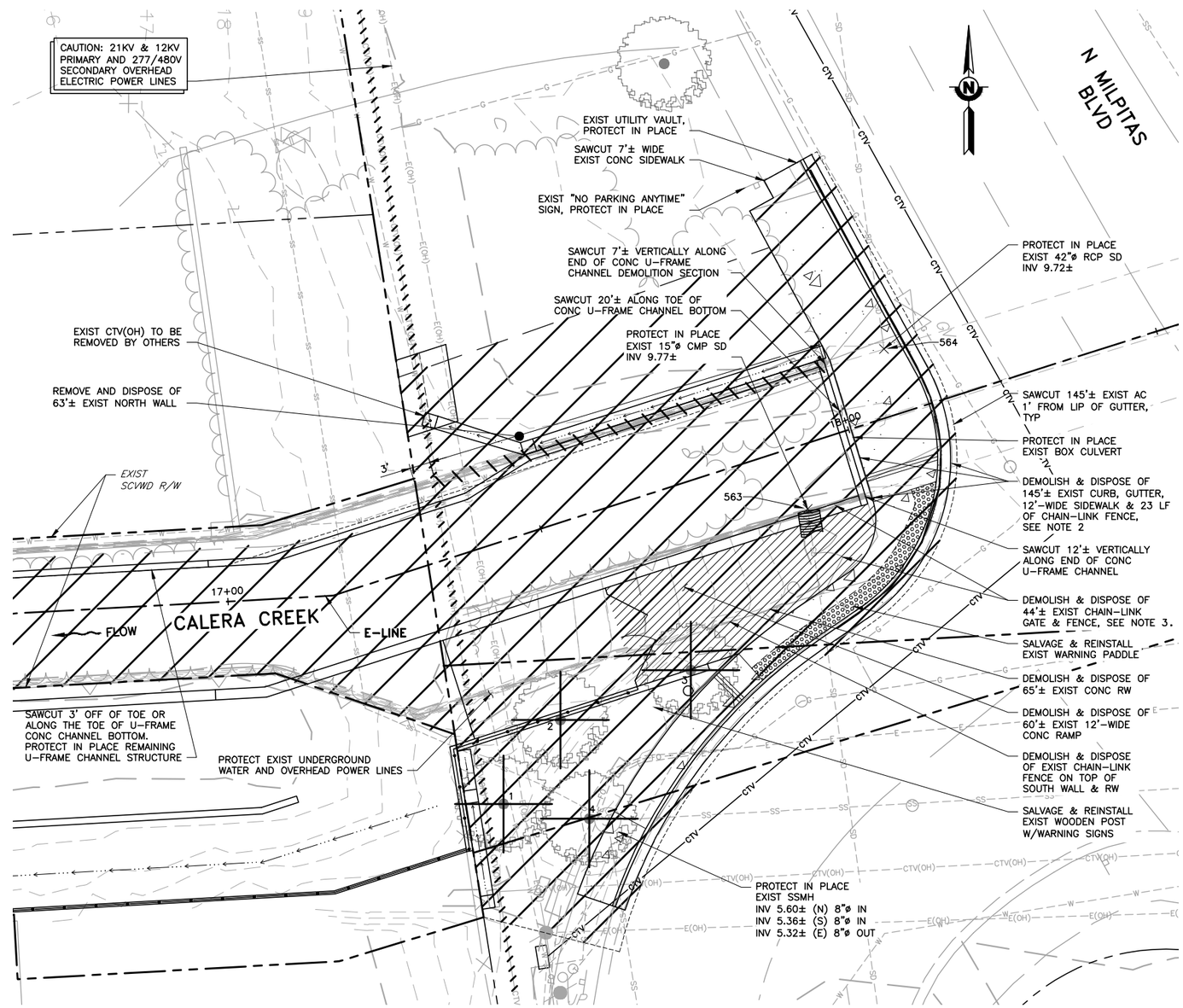

PLAN

SCALE: 1" = 10'

REV	DESCRIPTION	DATE	APPR

REFERENCE INFORMATION AND NOTES

1. SHORING IS REQUIRED. SEE SPECIFICATION 24.14 FOR SHORING REQUIREMENTS. CONTRACTOR IS ADVISED THAT THERE IS LIMITED CLEARANCE NEAR POWER LINES FOR SHORING INSTALLATION AND SPECIAL SHORING METHODS MAY BE REQUIRED.
2. ONLY ONE SIDE SIDEWALK SHALL BE REMOVED AT A TIME TO MAINTAIN ONE SIDE SIDEWALK OPEN.
3. REMOVE AND SALVAGE 2 SIGNS FASTENED TO GATES.

DATE 12/30/2020

DESIGN Y. LEE

DRAWN R. STILL

CHECKED Y. LEE

ENGINEERING CERTIFICATION

REGISTERED PROFESSIONAL ENGINEER TOUHAN LEE No. C42456 CIVIL STATE OF CALIFORNIA

12.30.2020

PROJECT ENGINEER DATE

SANTA CLARA VALLEY WATER DISTRICT

Valley Water

PROJECT NAME AND SHEET DESCRIPTION:

LOWER CALERA CREEK FLOOD PROTECTION PROJECT

DEMOLITION PLAN

SCALE: AS SHOWN

VERIFY SCALES: 0 1" — IF NOT ONE INCH ON ORIGINAL DRAWING IF NOT ONE INCH ON THIS SHEET, ADJUST SCALES ACCORDINGLY

PROJECT NUMBER: 40174005

SHEET CODE: D-05

SHEET NUMBER: 31 OF 144

DOCUMENT NUMBER: CAE_CY-D-4018-65936

USERNAME: Jennford 12/24/2020 9:13 AM
FILENAME: K:\Active Projects\MP-40174005\Lower Calera Creek Project\SHEETS\D-05.dwg

Attachment 4
Page 31 of 144

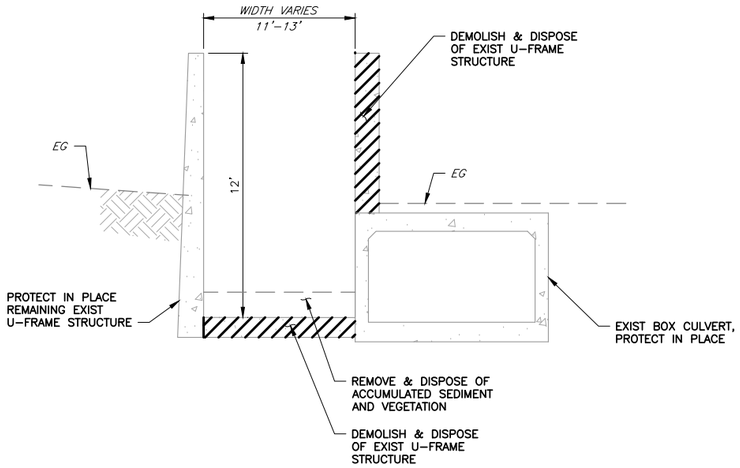

E–LINE STA 13+19 TO 13+36

SCALE: NTS

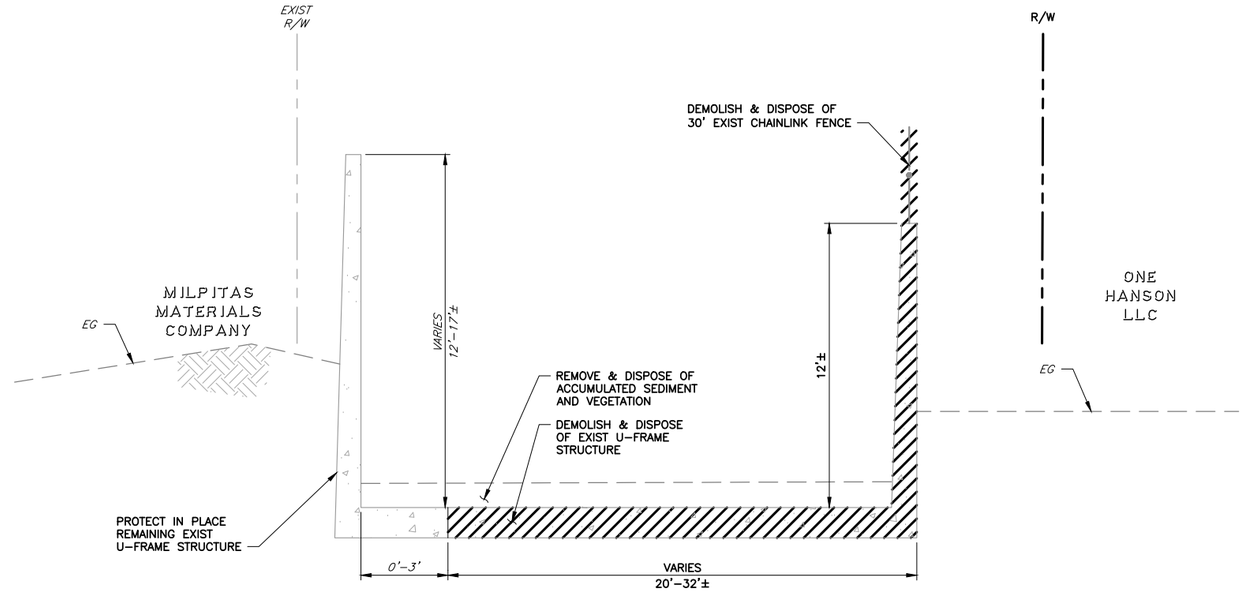

E–LINE STA 13+36 TO 17+37

SCALE: NTS

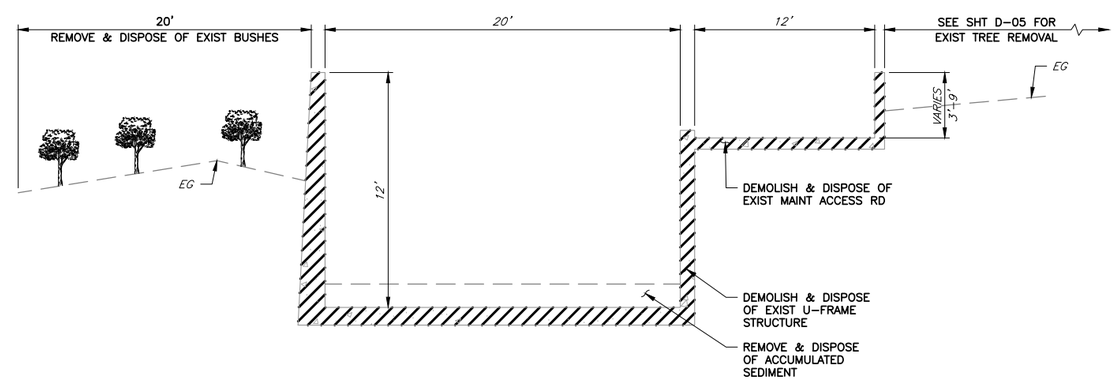

E–LINE STA 17+37 TO 17+99

SCALE: NTS

EXISTING U–FRAME CHANNEL DEMO TYPICAL SECTIONS

REV	DESCRIPTION	DATE	APPR

REFERENCE INFORMATION AND NOTES
1. BETWEEN E–LINE STA 17+04 TO 17+37, AT CONTRACTOR'S EXPENSE, CONTRACTOR HAS OPTION TO REMOVE WALL TO 1' BELOW EG TO GAIN ADDITIONAL WORK SPACE.

DATE 12/30/2020
DESIGN Y. LEE
DRAWN A. ABDEL
CHECKED Y. LEE

ENGINEERING CERTIFICATION
REGISTERED PROFESSIONAL ENGINEER YOUHAN LEE No. C42456 CIVIL STATE OF CALIFORNIA
PROJECT ENGINEER 12.30.2020 DATE

SANTA CLARA VALLEY WATER DISTRICT
Valley Water

PROJECT NAME AND SHEET DESCRIPTION:
LOWER CALERA CREEK
FLOOD PROTECTION PROJECT
DEMOLITION PLAN

SCALE: AS SHOWN
VERIFY SCALES: 0 1"
IF NOT ONE INCH ON ORIGINAL DRAWING IF NOT ONE INCH ON THIS SHEET, ADJUST SCALES ACCORDINGLY

PROJECT NUMBER: 40174005
SHEET CODE: D–06
SHEET NUMBER: 32 OF 144

Attachment 4
Page 32 of 144

USERNAME: Jennford 12/23/2020 4:05 PM
FILENAME: K:\Active Projects\MP-40174005\Lower Calera Creek Project\SHEETS\D-06.dwg
DOCUMENT NUMBER: CAE_CY-D-4018-65937

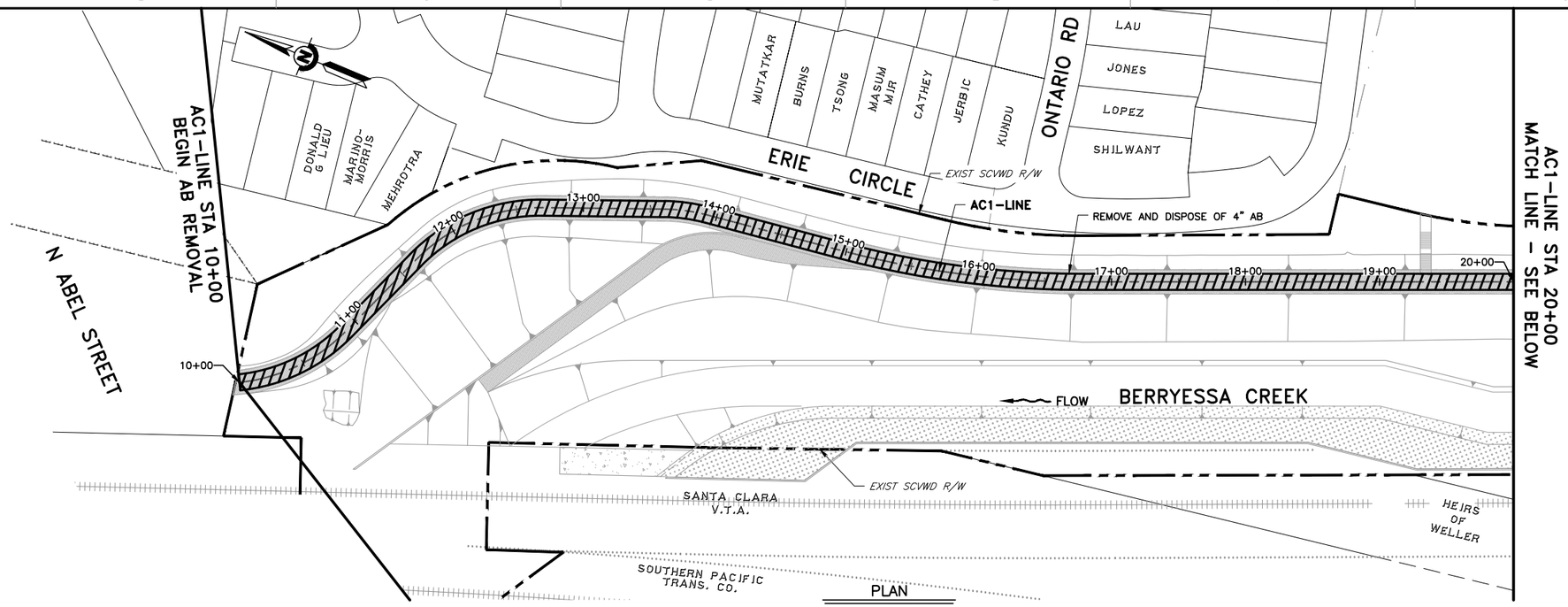

PLAN
SCALE 1" = 50'

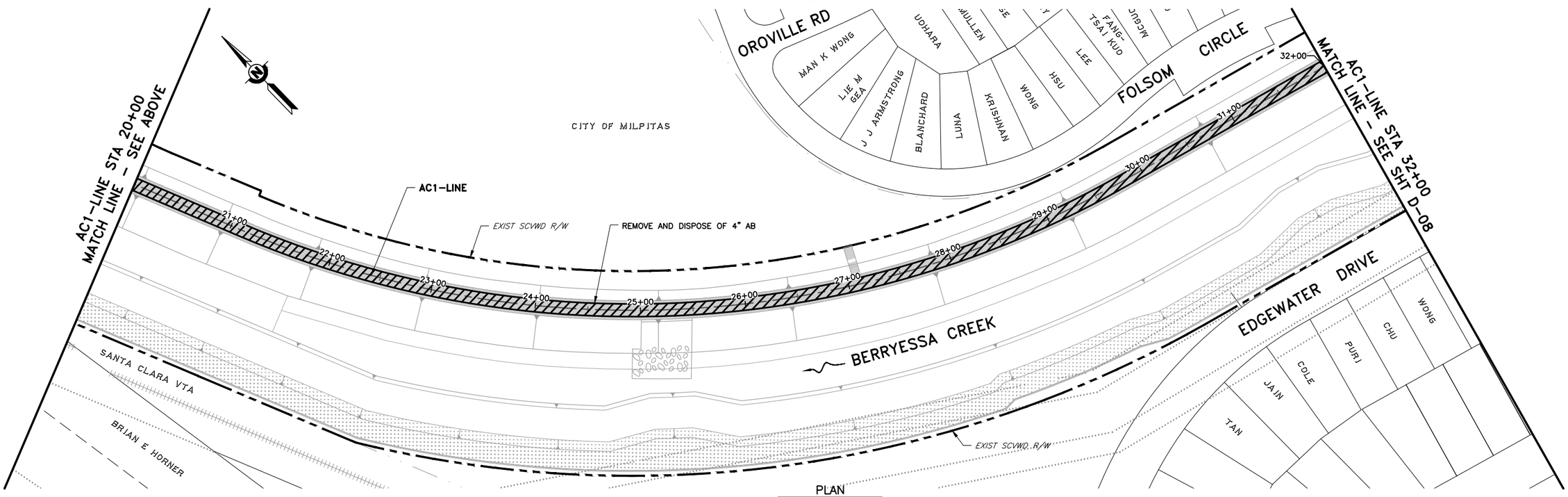

PLAN
SCALE 1" = 50'

REV	DESCRIPTION	DATE	APPR

REFERENCE INFORMATION AND NOTES

1. LEFT AND RIGHT BANKS ARE VIEWED LOOKING UPSTREAM.

DATE	12/30/2020
DESIGN	Y. LEE
DRAWN	J. FORD
CHECKED	Y. LEE

ENGINEERING CERTIFICATION

REGISTERED PROFESSIONAL ENGINEER YOUHAN LEE No. C42456 CIVIL STATE OF CALIFORNIA

12.30.2020

PROJECT ENGINEER DATE

SANTA CLARA VALLEY WATER DISTRICT

Valley Water

PROJECT NAME AND SHEET DESCRIPTION:

LOWER CALERA CREEK
FLOOD PROTECTION PROJECT

DEMOLITION PLAN
AC1-LINE STA 10+00 TO STA 32+00

SCALE	AS SHOWN
VERIFY SCALES	0 1" BAR IS ONE INCH ON ORIGINAL DRAWING IF NOT ONE INCH ON THIS SHEET, ADJUST SCALES ACCORDINGLY
PROJECT NUMBER	40174005
SHEET CODE:	D-07
SHEET NUMBER:	33 OF 144

DOCUMENT NUMBER: CAE_CY-D-4018-65938

USERNAME: Jennford 12/23/2020 4:05 PM
FILENAME: K:\Active Projects\MP-40174005\Lower Calera Creek Project\SHEETS\D-07.dwg

Attachment 4
Page 33 of 144

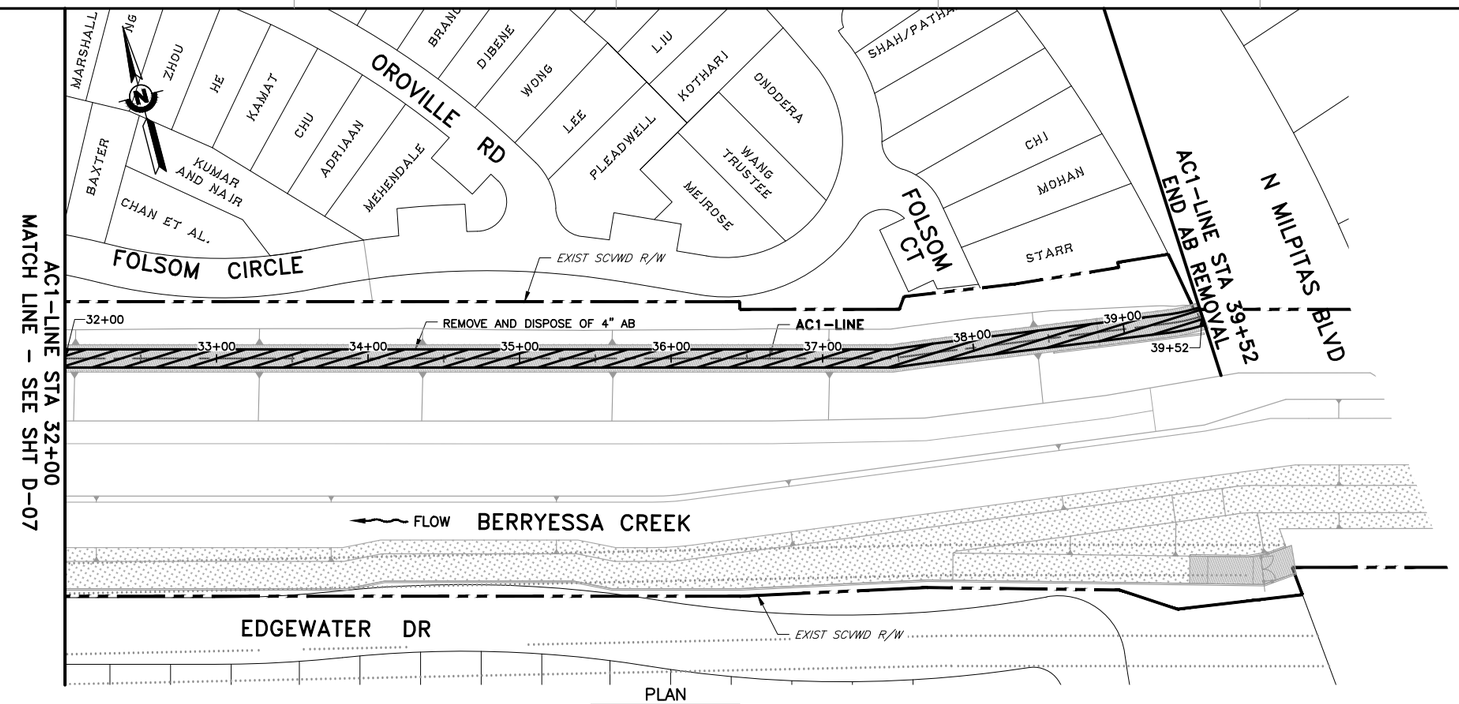

PLAN
SCALE 1" = 50'

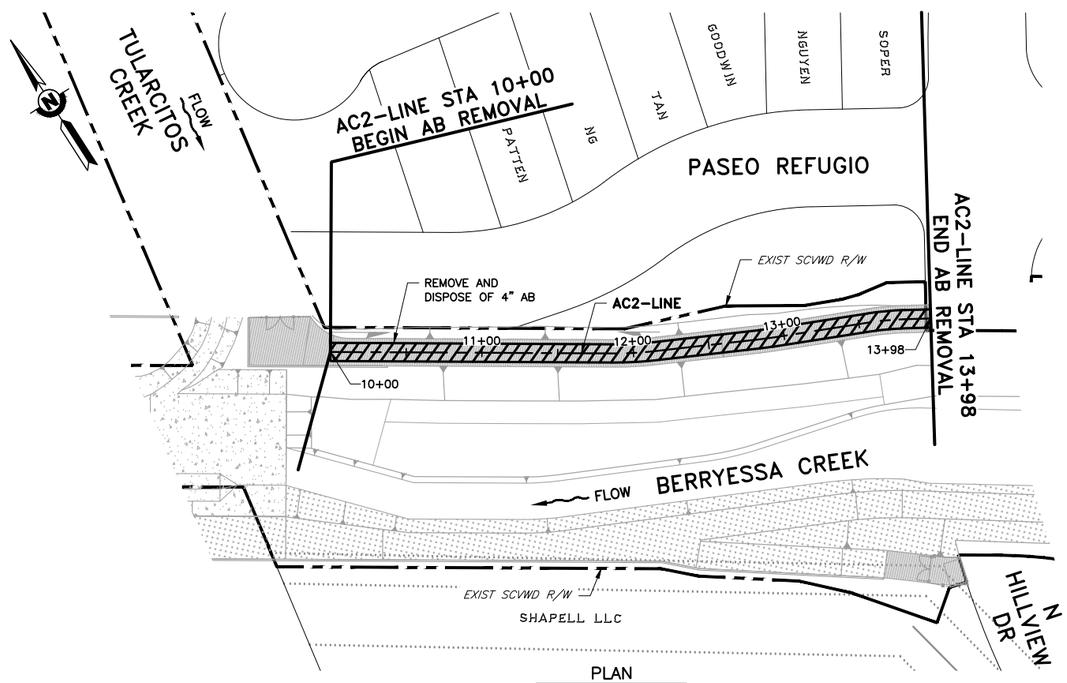

PLAN
SCALE 1" = 50'

USERNAME: Jennford 12/23/2020 4:05 PM
FILENAME: K:\Active Projects\MP-40174005\Lower Calera Creek Project\SHEETS\D-08.dwg

DOCUMENT NUMBER: CAE_CY-D-4018-65939

REV	DESCRIPTION	DATE	APPR

REFERENCE INFORMATION AND NOTES
1. LEFT AND RIGHT BANKS ARE VIEWED LOOKING UPSTREAM.

DATE 12/30/2020
DESIGN Y. LEE
DRAWN J. FORD
CHECKED Y. LEE

ENGINEERING CERTIFICATION
REGISTERED PROFESSIONAL ENGINEER YOUHAN LEE No. C42456 CIVIL STATE OF CALIFORNIA
PROJECT ENGINEER 12.30.2020 DATE

SANTA CLARA VALLEY WATER DISTRICT
Valley Water

PROJECT NAME AND SHEET DESCRIPTION:
LOWER CALERA CREEK
FLOOD PROTECTION PROJECT
DEMOLITION PLAN
AC1-LINE STA 32+00 TO STA 39+52
AC2-LINE STA 10+00 TO STA 13+98

SCALE AS SHOWN
VERIFY SCALES 0 1"
IF NOT ONE INCH ON ORIGINAL DRAWING IF NOT ONE INCH ON THIS SHEET, ADJUST SCALES ACCORDINGLY

PROJECT NUMBER 40174005
SHEET CODE: D-08
SHEET NUMBER: 34 OF 144

Attachment 4
Page 34 of 144

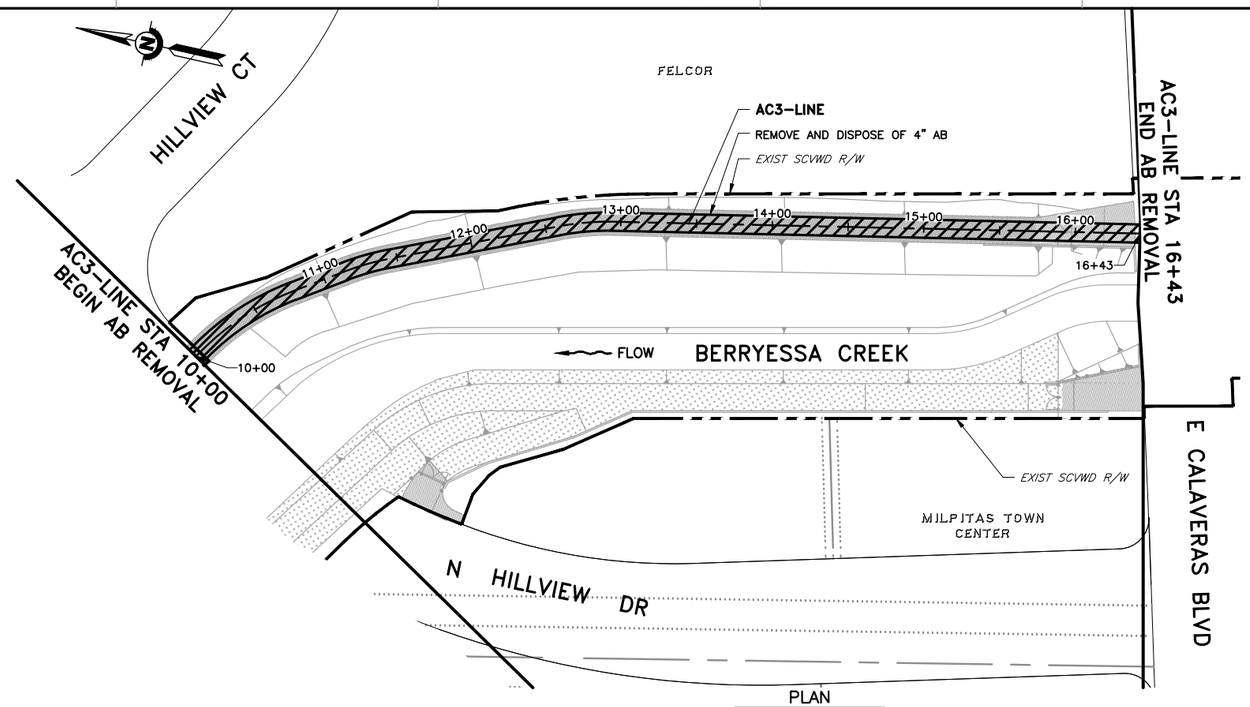

PLAN

SCALE 1" = 50'

USERNAME: Jennford 12/23/2020 4:06 PM
FILENAME: K:\Active Projects\MP-40174005\Lower Calera Creek Project\SHEETS\D-09.dwg

DOCUMENT NUMBER: CAE_CY-D-4018-65940

REV	DESCRIPTION	DATE	APPR

REFERENCE INFORMATION AND NOTES

1. LEFT AND RIGHT BANKS ARE VIEWED LOOKING UPSTREAM.

DATE 12/30/2020
DESIGN Y. LEE
DRAWN J. FORD
CHECKED Y. LEE

ENGINEERING CERTIFICATION

REGISTERED PROFESSIONAL ENGINEER YOUHAN LEE No. C42456 CIVIL STATE OF CALIFORNIA

PROJECT ENGINEER 12.30.2020 DATE

SANTA CLARA VALLEY WATER DISTRICT

Valley Water

PROJECT NAME AND SHEET DESCRIPTION:

LOWER CALERA CREEK
FLOOD PROTECTION PROJECT

DEMOLITION PLAN
AC3-LINE STA 10+00 TO STA 16+43

SCALE: AS SHOWN

VERIFY SCALES: 0 1"
IF NOT ONE INCH ON ORIGINAL DRAWING IF NOT ONE INCH ON THIS SHEET, ADJUST SCALES ACCORDINGLY

PROJECT NUMBER: 40174005

SHEET CODE: D-09

SHEET NUMBER: 35 OF 144

Attachment 4
Page 35 of 144

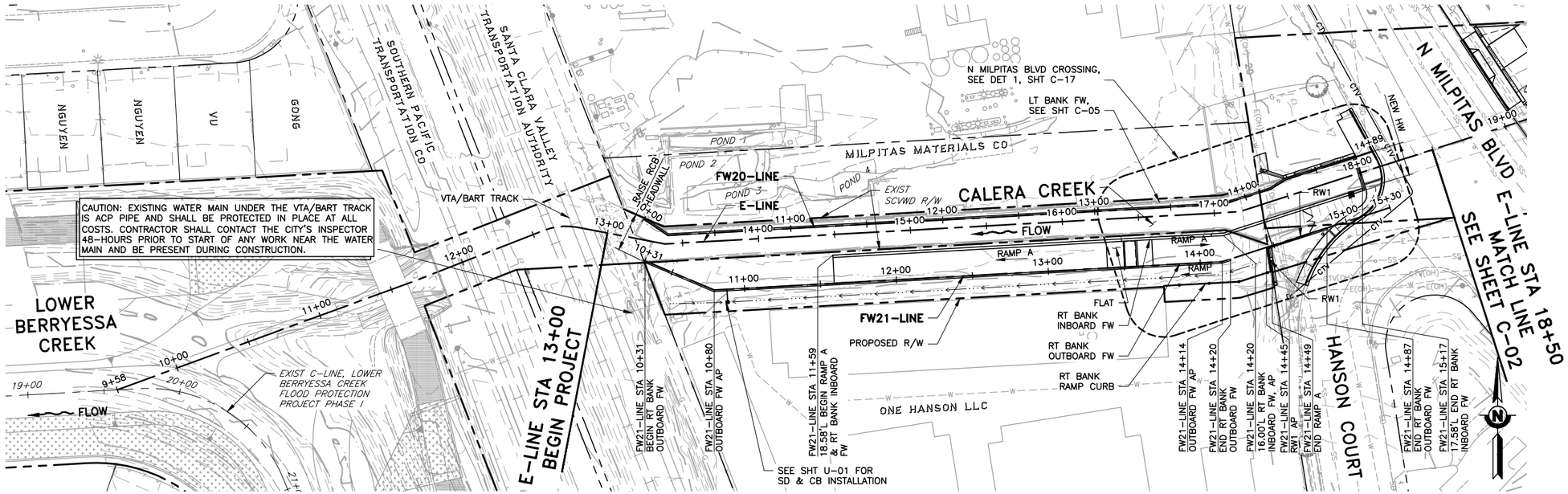

PLAN

SCALE: 1" = 40'

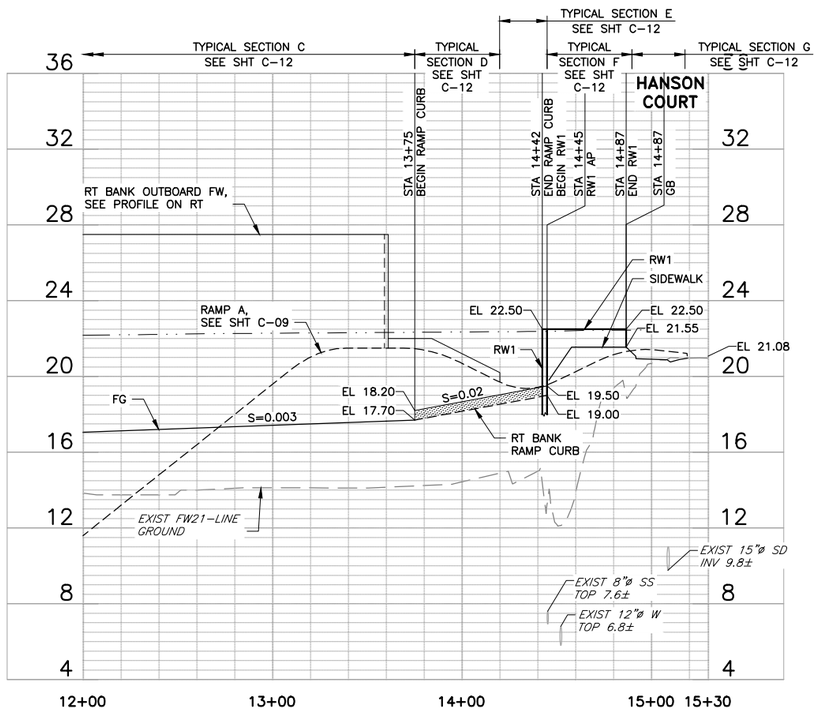

FW21-LINE RAMP CURB PROFILE

HORIZ: 1" = 40'
VERT: 1" = 4'

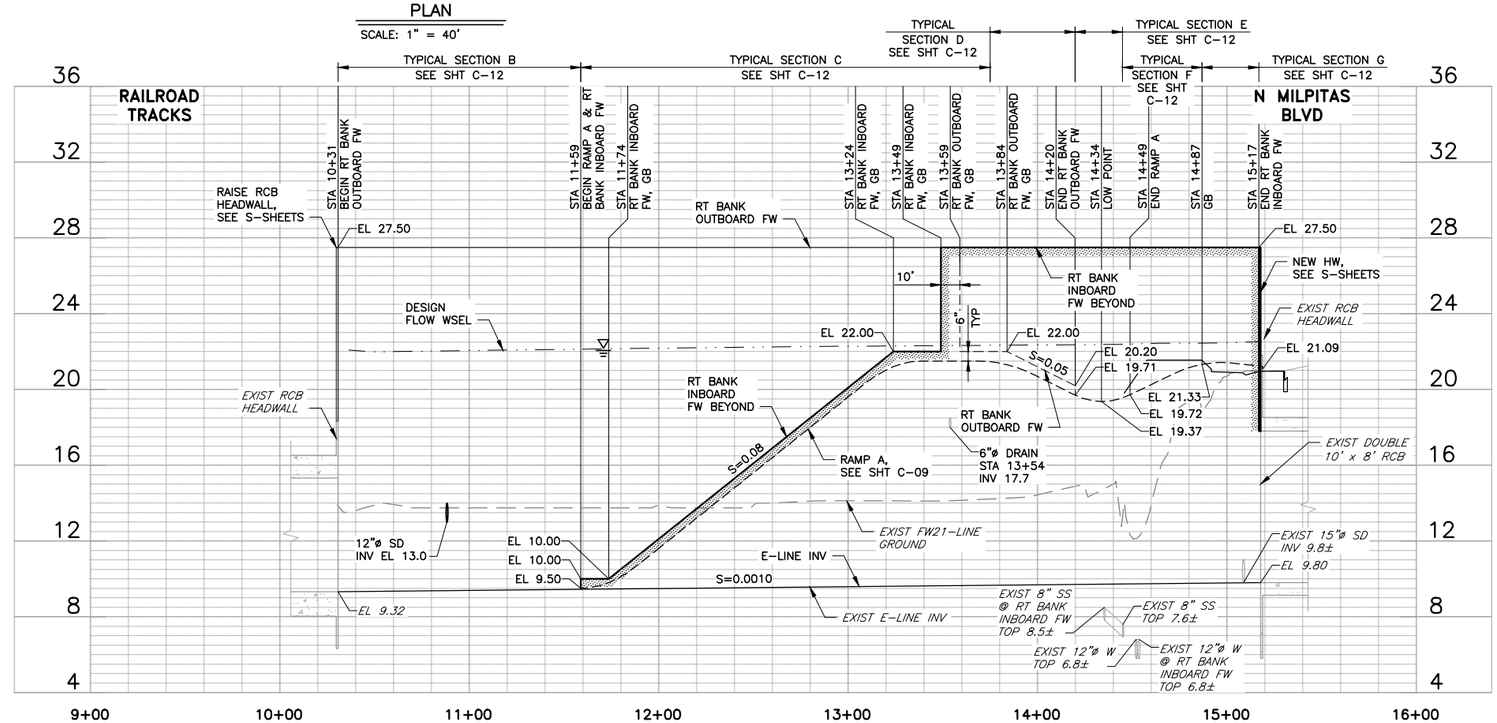

FW21-LINE MIRRORED INBOARD & OUTBOARD FW PROFILE

HORIZ: 1" = 40'
VERT: 1" = 4'

REV	DESCRIPTION	DATE	APPR

REFERENCE INFORMATION AND NOTES
1. AERIAL PHOTOGRAMMETRIC IMAGERY WAS TAKEN JULY, 2008.
2. FLOODWALL CONTROL LINES ARE AT THE INBOARD FACE OF WALL.
3. LEFT AND RIGHT BANKS ARE VIEWED LOOKING UPSTREAM.
4. FOR UTILITY RELOCATION, SEE DETAIL 1, SHEET U-01.
5. FW AND RW STATIONS SHOWN ARE ROUNDED TO THE NEAREST ONE. SEE S SHEETS FOR DETAILED STATIONS.

DATE 12/30/2020
DESIGN Y. LEE
DRAWN R. STILL
CHECKED Y. LEE

ENGINEERING CERTIFICATION
REGISTERED PROFESSIONAL ENGINEER TOUHAN LEE No. C42456 CIVIL STATE OF CALIFORNIA
12.30.2020
PROJECT ENGINEER DATE

SANTA CLARA VALLEY WATER DISTRICT
Valley Water

PROJECT NAME AND SHEET DESCRIPTION:

LOWER CALERA CREEK FLOOD PROTECTION PROJECT

RIGHT BANK PLAN AND PROFILE
E-LINE STA 13+00 TO 18+50
FW21-LINE STA 10+03 TO 15+00

SCALE: AS SHOWN
VERIFY SCALES: 0 1"
IF NOT ONE INCH ON ORIGINAL DRAWING IF NOT ONE INCH ON THIS SHEET, ADJUST SCALES ACCORDINGLY

PROJECT NUMBER: 40174005
SHEET CODE: C-01
SHEET NUMBER: 36 OF 144

DOCUMENT NUMBER: CAE_CY-C-4018-65941

USERNAME: Jennford 12/24/2020 9:48 AM
FILENAME: K:\Active Projects\MP-40174005\Lower Calera Creek Project\SHEETS\C-01.dwg

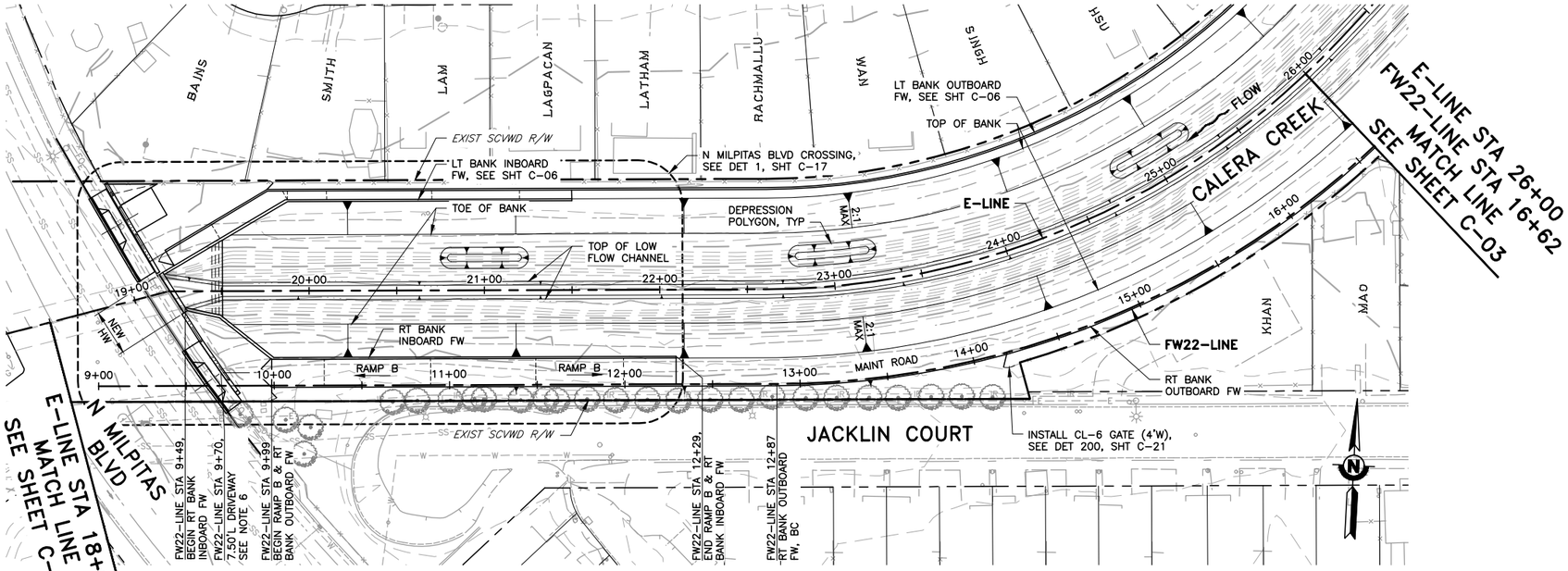

PLAN

SCALE: 1" = 40'

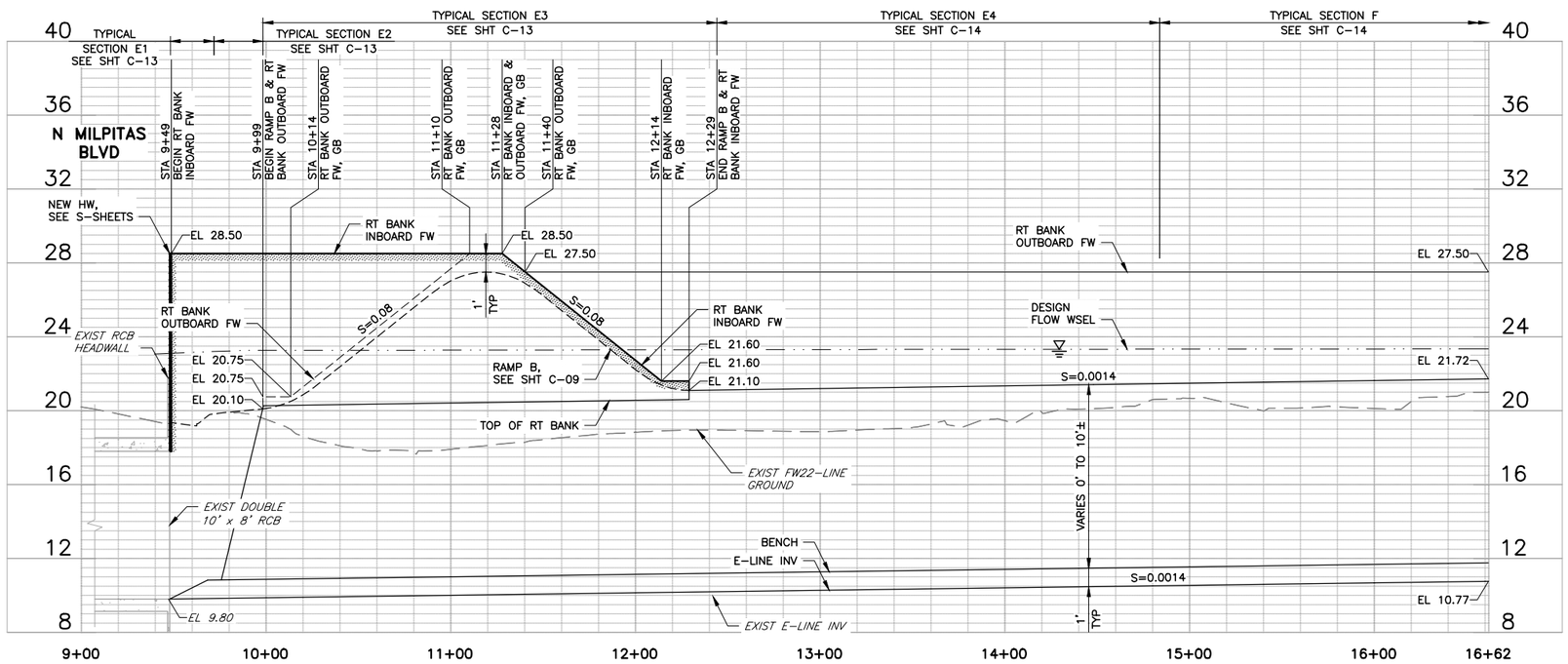

FW22-LINE MIRRORED PROFILE

HORIZ: 1" = 40'
VERT: 1" = 4'

REV	DESCRIPTION	DATE	APPR

Attachment 4
Page 37 of 144

REFERENCE INFORMATION AND NOTES

1. AERIAL PHOTOGRAMMETRIC IMAGERY WAS TAKEN JULY, 2008.
2. FLOODWALL CONTROL LINES ARE AT THE INBOARD FACE OF WALL.
3. LEFT AND RIGHT BANKS ARE VIEWED LOOKING UPSTREAM.
4. PROFILE SEEN AS PROJECTED ALONG FW22-LINE.
5. FW STATIONS SHOWN ARE ROUNDED TO THE NEAREST ONE. SEE S SHEETS FOR CONSTRUCTION AND FOR DETAILED STATIONS.
6. FOR DRIVEWAY DETAILS, SEE CITY OF MILPITAS STANDARD DRAWING NO. 432, (INDUSTRIAL ONE-WAY 20'W) SIMILAR.

DATE	
12/30/2020	
DESIGN	Y. LEE
DRAWN	R. STILL
CHECKED	Y. LEE

ENGINEERING CERTIFICATION

REGISTERED PROFESSIONAL ENGINEER TOUHAN LEE No. C42456 CIVIL STATE OF CALIFORNIA

12.30.2020

PROJECT ENGINEER DATE

SANTA CLARA VALLEY WATER DISTRICT

Valley Water

PROJECT NAME AND SHEET DESCRIPTION:

LOWER CALERA CREEK FLOOD PROTECTION PROJECT

RIGHT BANK PLAN AND PROFILE
E-LINE STA 18+50 TO 26+00
FW22-LINE STA 9+00 TO 16+62

Attachment 4
Page 37 of 144

SCALE	PROJECT NUMBER
AS SHOWN	40174005
VERIFY SCALES 0 1"	SHEET CODE: C-02
IF NOT ONE INCH ON ORIGINAL DRAWING IF NOT ONE INCH ON THIS SHEET, ADJUST SCALES ACCORDINGLY	SHEET NUMBER: 37 OF 144

DOCUMENT NUMBER: CAE_CY-C-4018-65942

USERNAME: Jennford 12/24/2020-10:00 AM
FILENAME: K:\Active Projects\MP-40174005\Lower Calera Creek Project\SHEETS\C-02.dwg

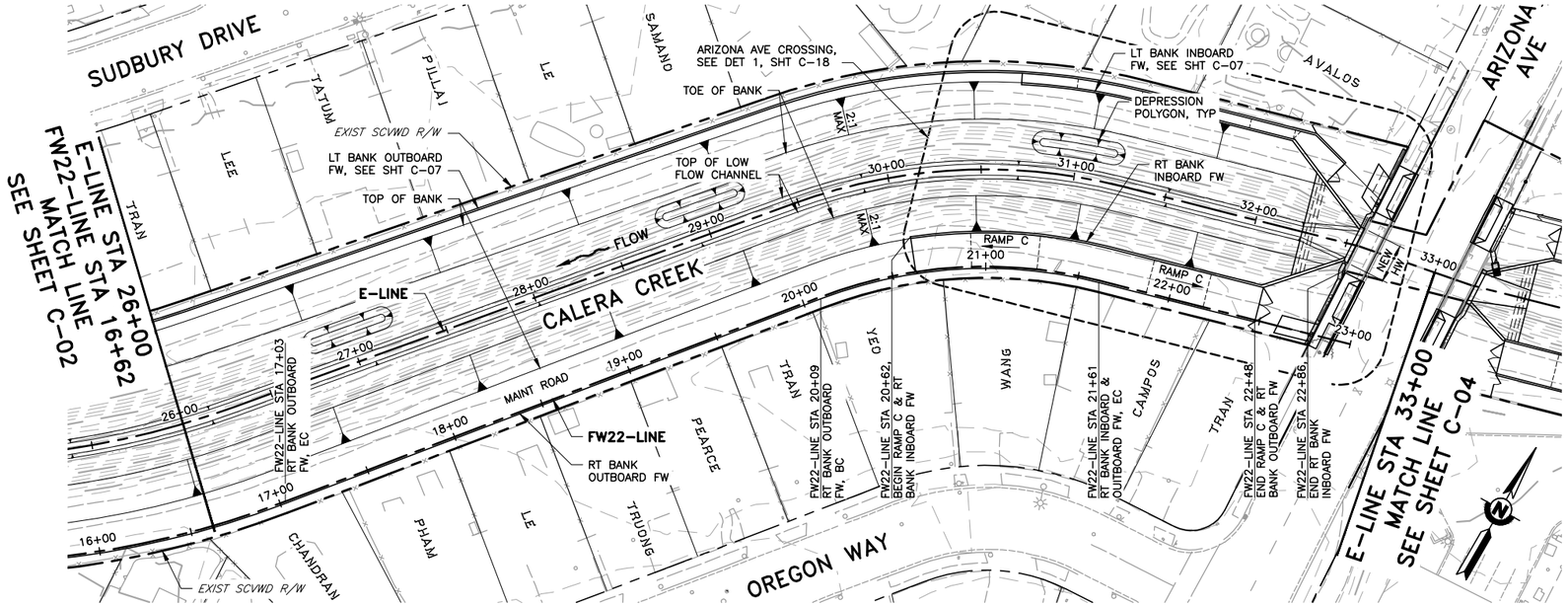

PLAN

SCALE: 1" = 40'

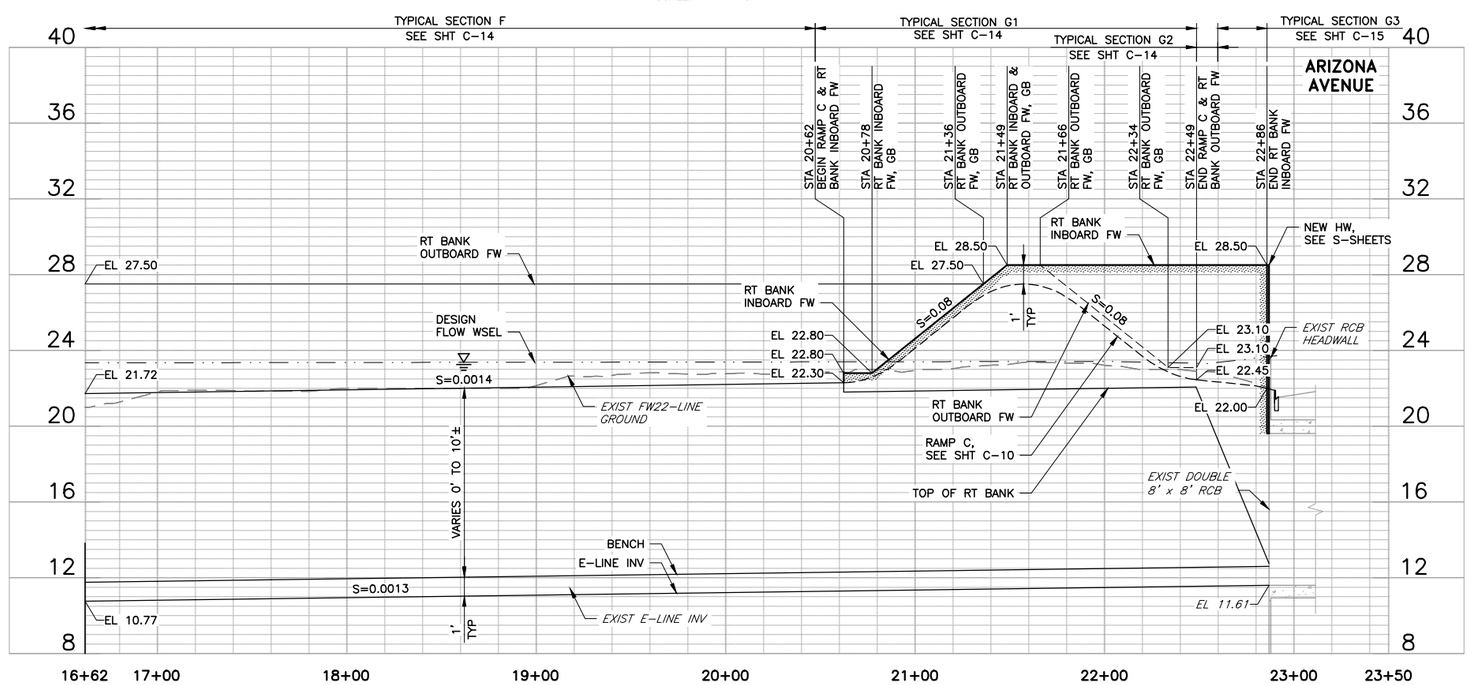

FW22-LINE MIRRORED PROFILE

HORIZ: 1" = 40'
VERT: 1" = 4'

REV	DESCRIPTION	DATE	APPR

REFERENCE INFORMATION AND NOTES

1. AERIAL PHOTOGRAMMETRIC IMAGERY WAS TAKEN JULY, 2008.
2. FLOODWALL CONTROL LINES ARE AT THE INBOARD FACE OF WALL.
3. LEFT AND RIGHT BANKS ARE VIEWED LOOKING UPSTREAM.
4. PROFILE SEEN AS PROJECTED ALONG FW22-LINE.
5. FW STATIONS SHOWN ARE ROUNDED TO THE NEAREST ONE. SEE S SHEETS FOR CONSTRUCTION AND FOR DETAILED STATIONS.

DATE	
12/30/2020	
DESIGN	Y. LEE
DRAWN	R. STILL
CHECKED	Y. LEE

ENGINEERING CERTIFICATION

REGISTERED PROFESSIONAL ENGINEER YOUHAN LEE No. C42456 CIVIL STATE OF CALIFORNIA

12.30.2020

PROJECT ENGINEER DATE

SANTA CLARA VALLEY WATER DISTRICT

Valley Water

PROJECT NAME AND SHEET DESCRIPTION:

LOWER CALERA CREEK
FLOOD PROTECTION PROJECT

RIGHT BANK PLAN AND PROFILE
E-LINE STA 26+00 TO 33+00
FW22-LINE STA 16+62 TO 22+87

SCALE	PROJECT NUMBER
AS SHOWN	40174005
VERIFY SCALES 0 1" IF NOT ONE INCH ON THIS SHEET, ADJUST SCALES ACCORDINGLY	SHEET CODE: C-03
PLOT TO ONE INCH ON ORIGINAL DRAWING	SHEET NUMBER: 38 OF 144

Attachment 4
Page 38 of 144

USERNAME: Jennford 12/24/2020 10:10 AM
FILENAME: K:\Active Projects\MP-40174005\Lower Calera Creek Project\SHEETS\C-03.dwg
DOCUMENT NUMBER: CAE_CY-C-4018-65943

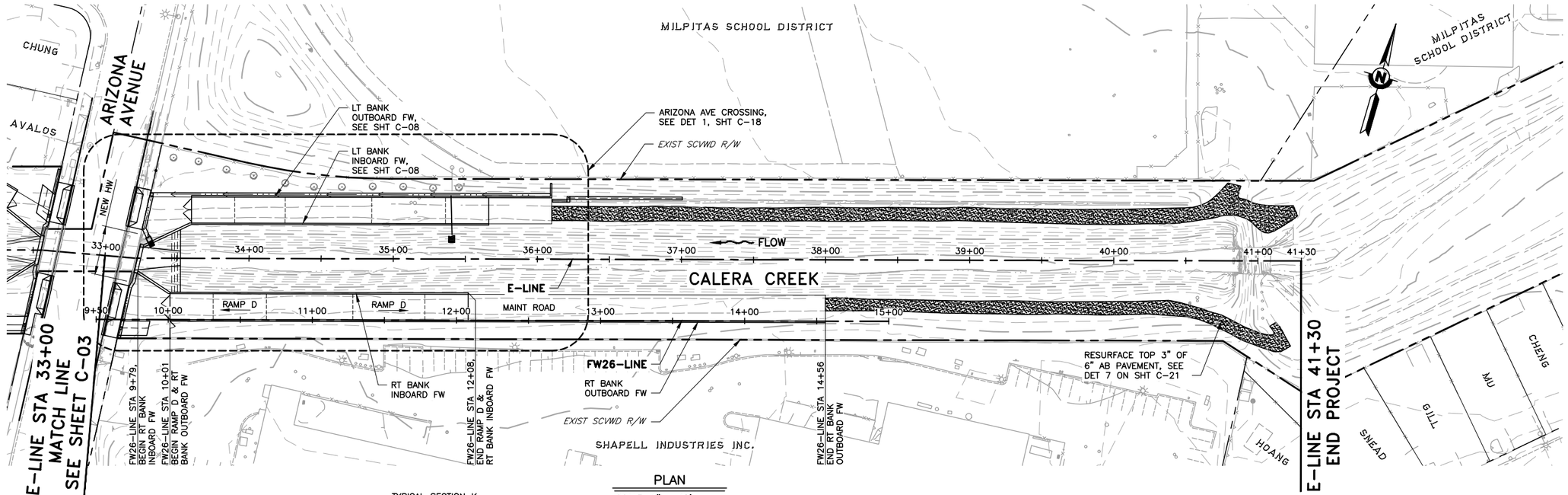

PLAN

SCALE: 1" = 40'

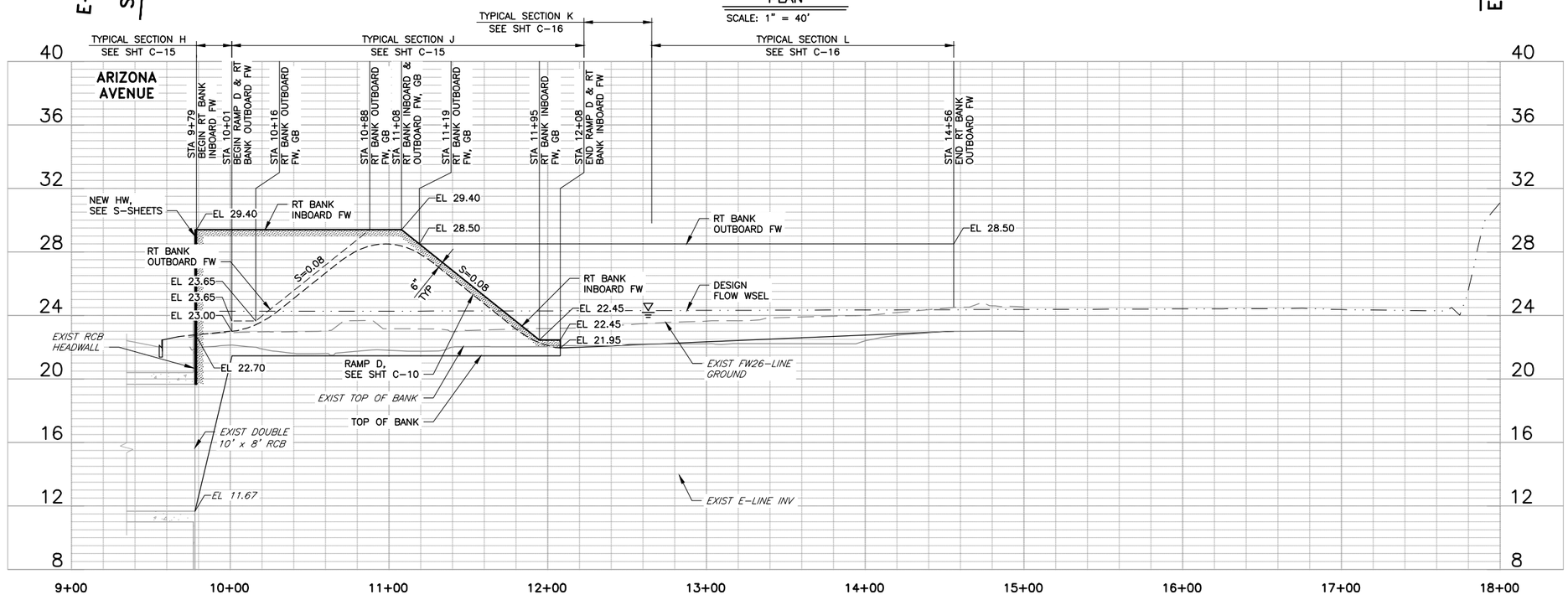

FW26-LINE MIRRORED PROFILE

HORIZ: 1" = 40'
VERT: 1" = 4'

REV	DESCRIPTION	DATE	APPR

REFERENCE INFORMATION AND NOTES
1. AERIAL PHOTOGRAMMETRIC IMAGERY WAS TAKEN JULY, 2008.
2. FLOODWALL CONTROL LINES ARE AT THE INBOARD FACE OF WALL.
3. LEFT AND RIGHT BANKS ARE VIEWED LOOKING UPSTREAM.
4. PROFILE SEEN AS PROJECTED ALONG FW26-LINE.
5. FW STATIONS SHOWN ARE ROUNDED TO THE NEAREST ONE. SEE S SHEETS FOR CONSTRUCTION AND FOR DETAILED STATIONS.

DATE 12/30/2020
DESIGN Y. LEE
DRAWN R. STILL
CHECKED Y. LEE

ENGINEERING CERTIFICATION
REGISTERED PROFESSIONAL ENGINEER TOUHAN LEE No. C42456 CIVIL STATE OF CALIFORNIA
PROJECT ENGINEER 12.30.2020 DATE

SANTA CLARA VALLEY WATER DISTRICT
Valley Water

PROJECT NAME AND SHEET DESCRIPTION:
LOWER CALERA CREEK
FLOOD PROTECTION PROJECT
RIGHT BANK PLAN AND PROFILE
E-LINE STA 33+00 TO 41+30
FW26-LINE STA 9+50 TO 15+00

SCALE AS SHOWN
VERIFY SCALES 0 1"
IF NOT ONE INCH ON ORIGINAL DRAWING IF NOT ONE INCH ON THIS SHEET, ADJUST SCALES ACCORDINGLY

PROJECT NUMBER 40174005
SHEET CODE: C-04
SHEET NUMBER: 39 OF 144

USERNAME: Jennford 12/24/2020 10:18 AM
FILENAME: K:\Active Projects\MP-40174005\Lower Calera Creek Project\SHEETS\C-04.dwg
DOCUMENT NUMBER: CAE_CY-C-4018-65944

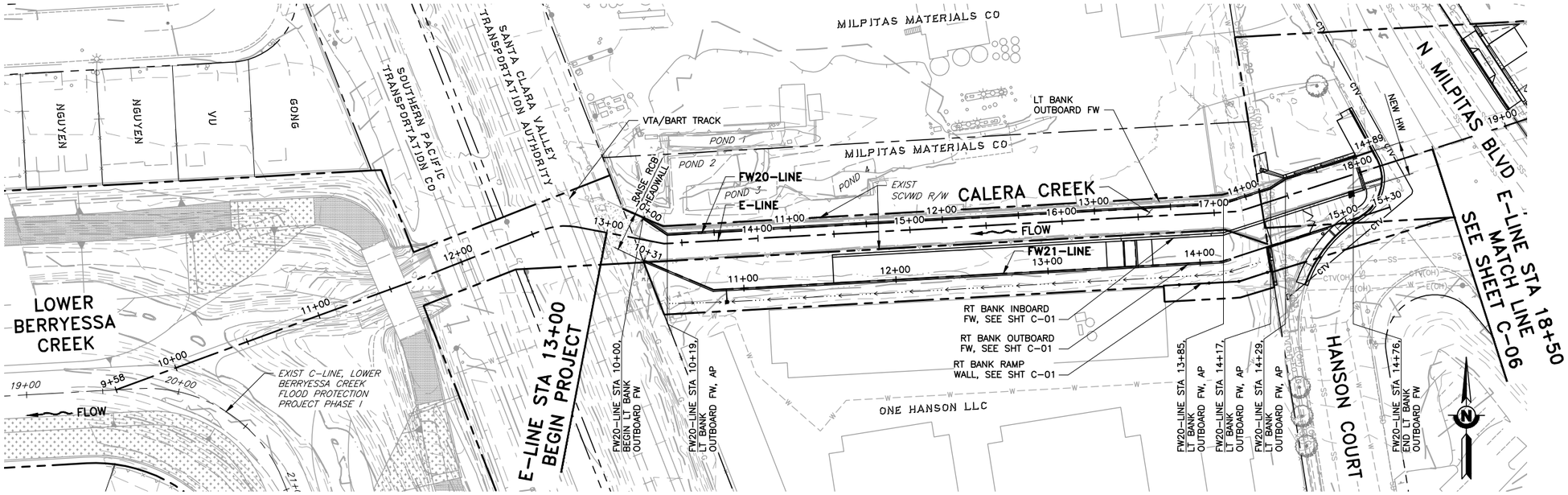

PLAN

SCALE: 1" = 40'

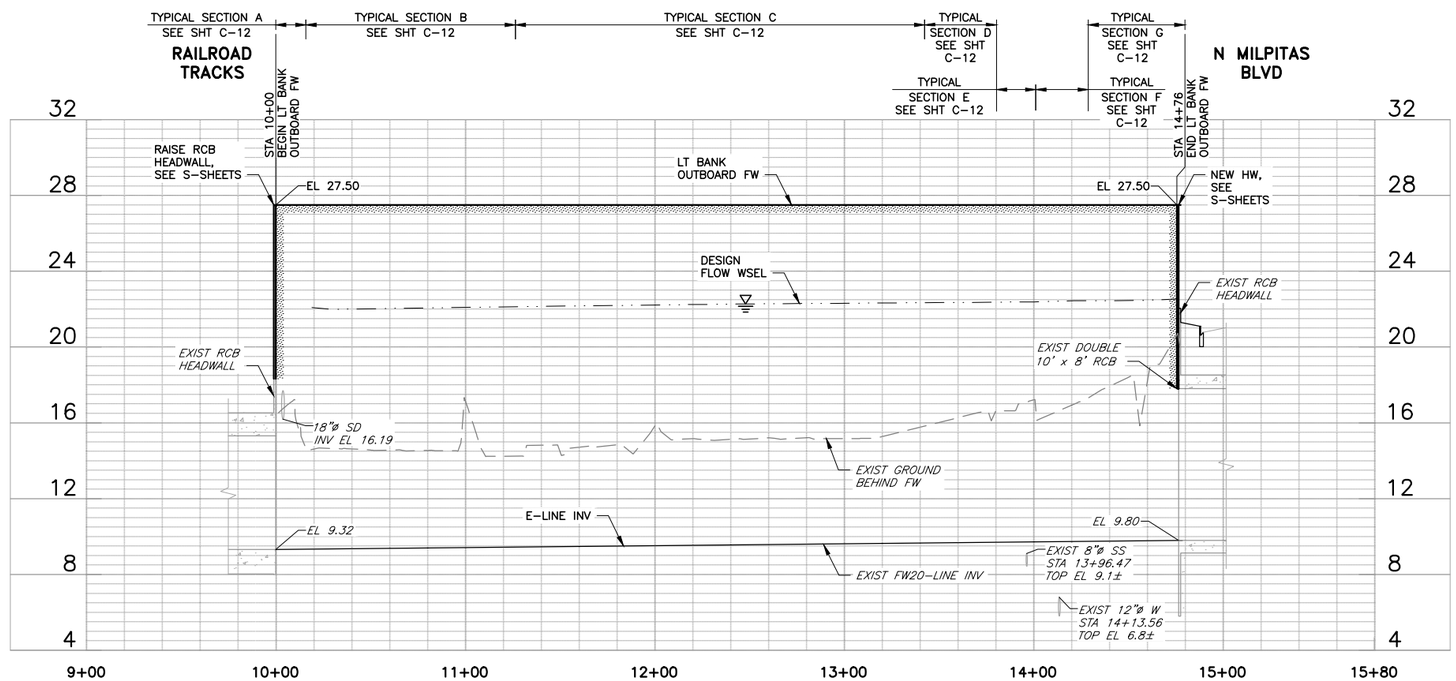

FW20-LINE LT BANK OUTBOARD FW PROFILE

HORIZ: 1" = 40'
VERT: 1" = 4'

REV	DESCRIPTION	DATE	APPR

REFERENCE INFORMATION AND NOTES

1. AERIAL PHOTOGRAMMETRIC IMAGERY WAS TAKEN JULY, 2008.
2. LEFT AND RIGHT BANKS ARE VIEWED LOOKING UPSTREAM.
3. FW STATIONS SHOWN ARE ROUNDED TO THE NEAREST ONE. SEE S SHEETS FOR DETAILED STATIONS.

DATE	ENGINEERING CERTIFICATION
12/30/2020	REGISTERED PROFESSIONAL ENGINEER YOUHAN LEE No. C42456 CIVIL STATE OF CALIFORNIA
DESIGN Y. LEE	12.30.2020
DRAWN R. STILL	PROJECT ENGINEER DATE
CHECKED Y. LEE	

SANTA CLARA VALLEY WATER DISTRICT

Valley Water

PROJECT NAME AND SHEET DESCRIPTION:

LOWER CALERA CREEK FLOOD PROTECTION PROJECT

LEFT BANK PLAN AND PROFILE FW20-LINE STA 10+00 TO 14+76

SCALE	PROJECT NUMBER
AS SHOWN	40174005
VERIFY SCALES 0 1"	SHEET CODE: C-05
IF NOT ONE INCH ON ORIGINAL DRAWING IF NOT ONE INCH ON THIS SHEET, ADJUST SCALES ACCORDINGLY	SHEET NUMBER: 40 OF 144

DOCUMENT NUMBER: CAE_CY-C-4018-65945

USERNAME: Jennford 12/24/2020 10:28 AM
FILENAME: K:\Active Projects\MP-40174005\Lower Calera Creek Project\SHEETS\C-05.dwg

Attachment 4
Page 40 of 144

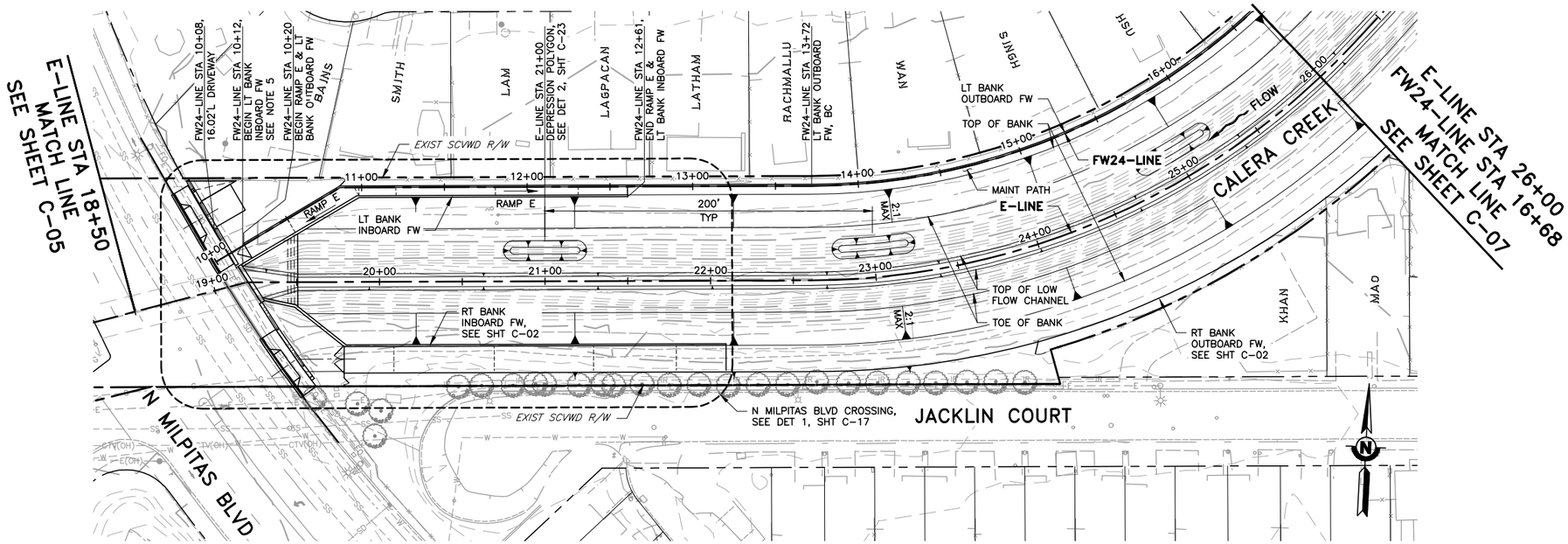

PLAN

SCALE: 1" = 40'

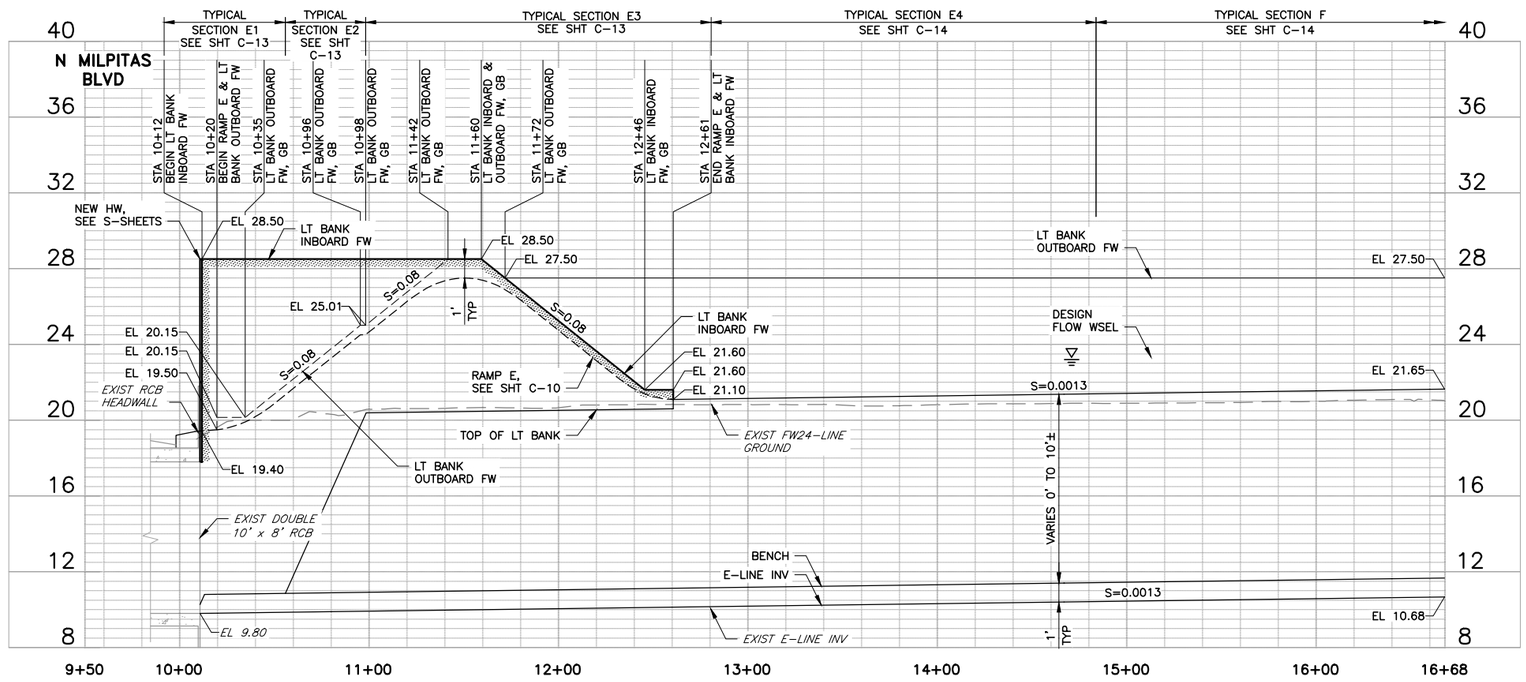

FW24-LINE PROFILE

HORIZ: 1" = 40'
VERT: 1" = 4'

REV	DESCRIPTION	DATE	APPR

REFERENCE INFORMATION AND NOTES

1. AERIAL PHOTOGRAMMETRIC IMAGERY WAS TAKEN JULY, 2008.
2. FLOODWALL CONTROL LINES ARE AT THE INBOARD FACE OF WALL.
3. LEFT AND RIGHT BANKS ARE VIEWED LOOKING UPSTREAM.
4. PROFILE SEEN AS PROJECTED ALONG FW24-LINE. FW STATIONS SHOWN ARE ROUNDED TO THE NEAREST ONE. SEE S SHEETS FOR CONSTRUCTION AND FOR DETAILED STATIONS.
5. FOR DRIVEWAY DETAILS, SEE CITY OF MILPITAS STANDARD DRAWING NO. 432, (INDUSTRIAL ONE-WAY 20'W) SIMILAR.

DATE	
12/30/2020	
DESIGN	Y. LEE
DRAWN	R. STILL
CHECKED	Y. LEE

ENGINEERING CERTIFICATION

REGISTERED PROFESSIONAL ENGINEER TOUHAN LEE No. C42456 CIVIL STATE OF CALIFORNIA

PROJECT ENGINEER — DATE 12.30.2020

SANTA CLARA VALLEY WATER DISTRICT

Valley Water

PROJECT NAME AND SHEET DESCRIPTION:

LOWER CALERA CREEK FLOOD PROTECTION PROJECT

LEFT BANK PLAN AND PROFILE
E-LINE STA 18+50 TO 26+00
FW24-LINE STA 10+00 TO 16+68

SCALE	PROJECT NUMBER
AS SHOWN	40174005
VERIFY SCALES 0 1" ORIGINAL DRAWING IS 30" X 42" IF NOT ONE INCH ON THIS SHEET, ADJUST SCALES ACCORDINGLY	SHEET CODE: C-06
	SHEET NUMBER: 41 OF 144

USERNAME: Jennford 12/24/2020-10:37 AM
FILENAME: K:\Active Projects\MP-40174005\Lower Calera Creek Project\SHEETS\C-06.dwg

DOCUMENT NUMBER: CAE_CY-C-4018-65946

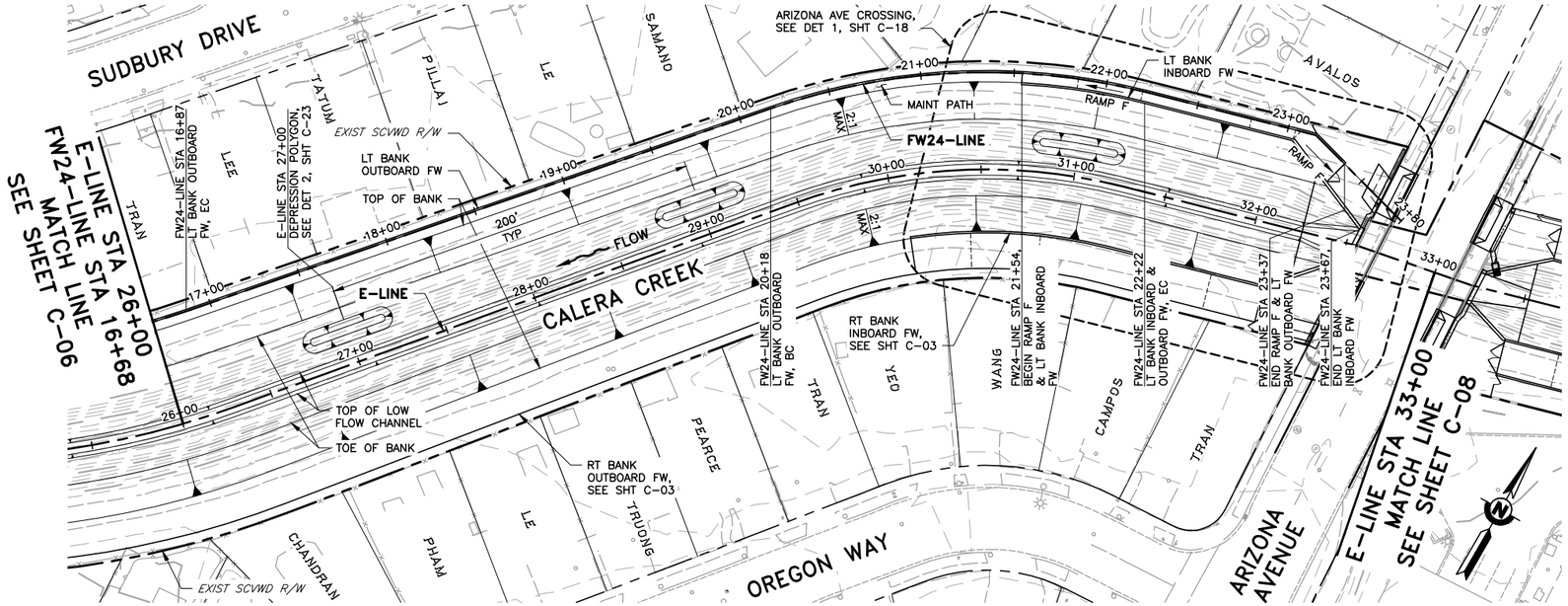

PLAN

SCALE: 1" = 40'

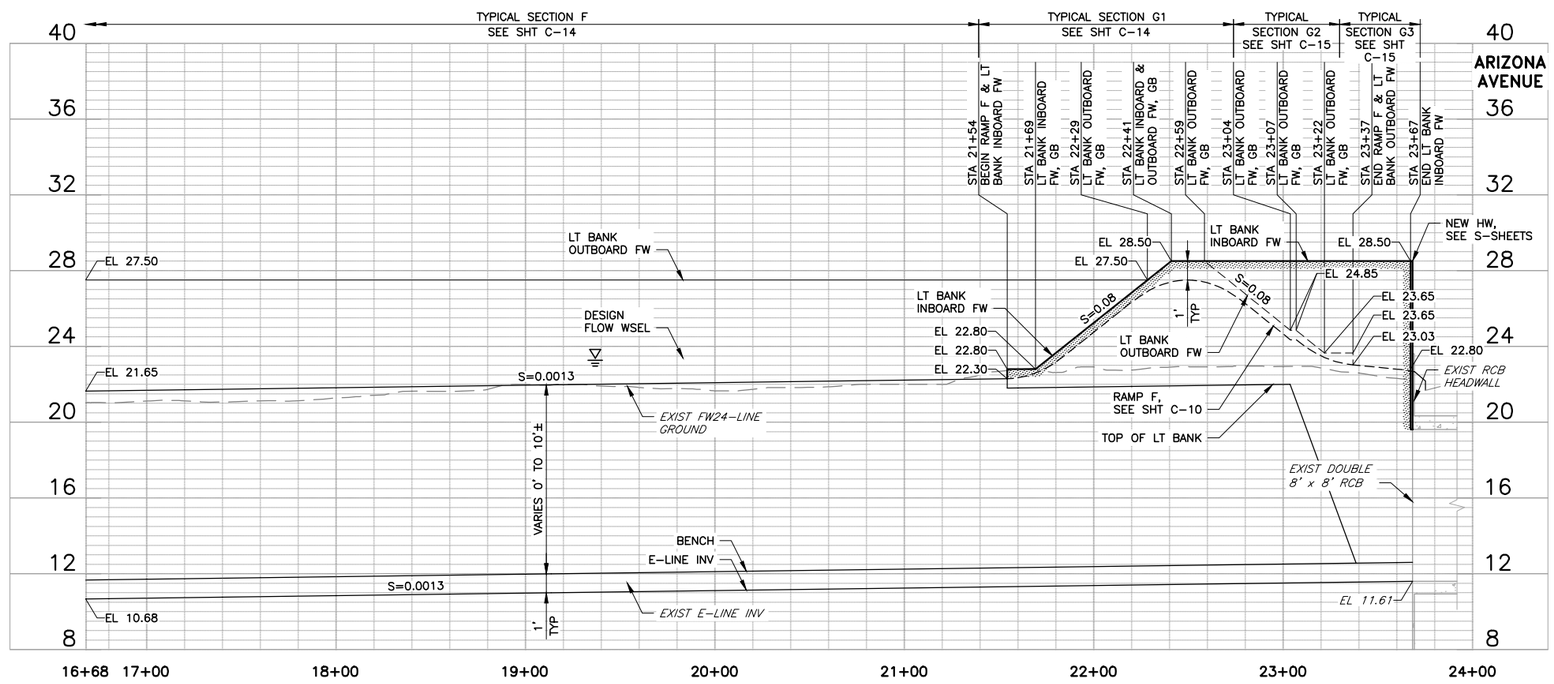

FW24-LINE PROFILE

HORIZ: 1" = 40'
VERT: 1" = 4'

REV	DESCRIPTION	DATE	APPR

REFERENCE INFORMATION AND NOTES

1. AERIAL PHOTOGRAMMETRIC IMAGERY WAS TAKEN JULY, 2008.
2. FLOODWALL CONTROL LINES ARE AT THE INBOARD FACE OF WALL.
3. LEFT AND RIGHT BANKS ARE VIEWED LOOKING UPSTREAM.
4. PROFILE SEEN AS PROJECTED ALONG FW24-LINE.
5. FW STATIONS SHOWN ARE ROUNDED TO THE NEAREST ONE. SEE S SHEETS FOR CONSTRUCTION AND FOR DETAILED STATIONS.

DATE	12/30/2020
DESIGN	Y. LEE
DRAWN	R. STILL
CHECKED	Y. LEE

ENGINEERING CERTIFICATION

REGISTERED PROFESSIONAL ENGINEER TOUHAN LEE No. C42456 CIVIL STATE OF CALIFORNIA

PROJECT ENGINEER — DATE 12.30.2020

SANTA CLARA VALLEY WATER DISTRICT

Valley Water

PROJECT NAME AND SHEET DESCRIPTION:

LOWER CALERA CREEK
FLOOD PROTECTION PROJECT

LEFT BANK PLAN AND PROFILE
E-LINE STA 26+00 TO 33+00
FW24-LINE STA 16+68 TO 23+80

SCALE: AS SHOWN

VERIFY SCALES: 0 — 1"
IF NOT ONE INCH ON ORIGINAL DRAWING IT WILL BE ONE INCH ON THIS SHEET, ADJUST SCALES ACCORDINGLY

PROJECT NUMBER: 40174005

SHEET CODE: C-07

SHEET NUMBER: 42 OF 144

DOCUMENT NUMBER: CAE_CY-C-4018-65947

USERNAME: Jennford 12/24/2020 10:45 AM
FILENAME: K:\Active Projects\MP-40174005\Lower Calera Creek Project\SHEETS\C-07.dwg

Attachment 4
Page 42 of 144

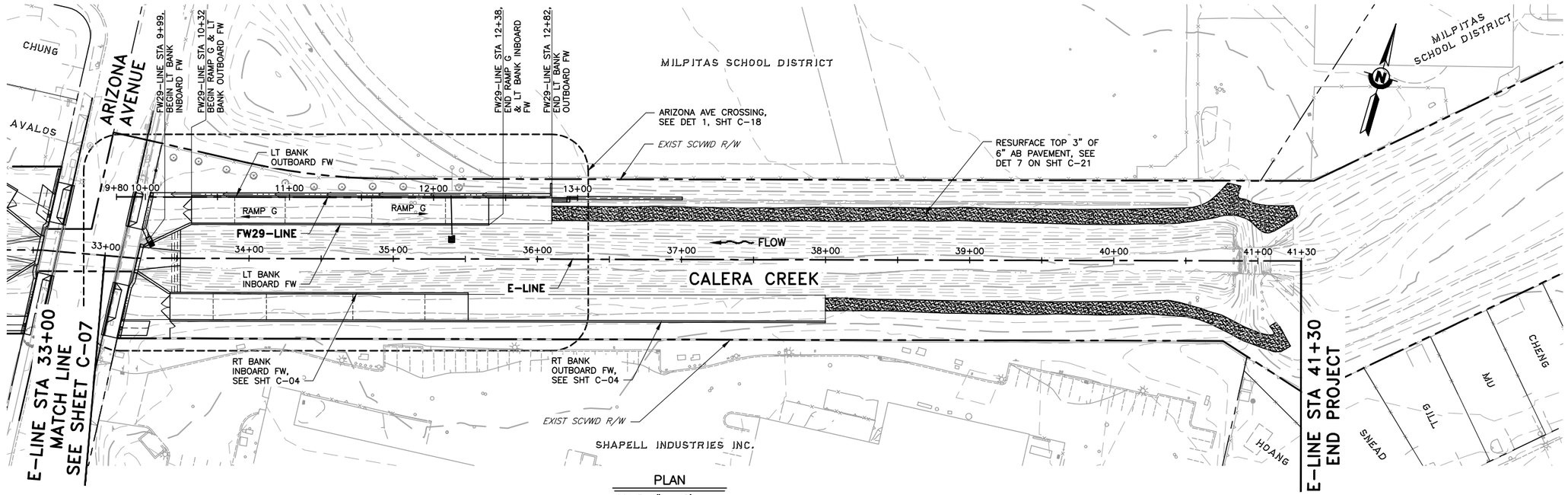

PLAN

SCALE: 1" = 40'

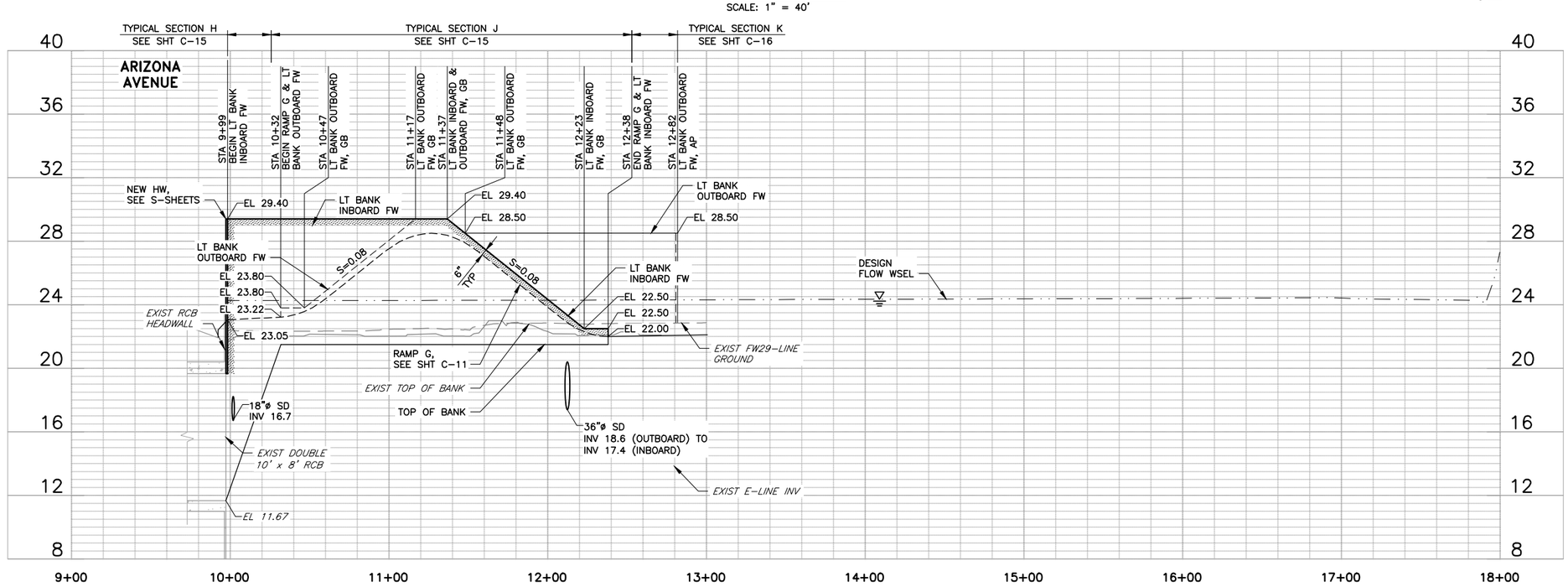

FW29–LINE PROFILE

HORIZ: 1" = 40'
VERT: 1" = 4'

REV	DESCRIPTION	DATE	APPR

REFERENCE INFORMATION AND NOTES

1. AERIAL PHOTOGRAMMETRIC IMAGERY WAS TAKEN JULY, 2008.
2. FLOODWALL CONTROL LINES ARE AT THE INBOARD FACE OF WALL.
3. LEFT AND RIGHT BANKS ARE VIEWED LOOKING UPSTREAM.
4. FOR UTILITY RELOCATION, SEE DETAIL 1, SHEET U–02.
5. PROFILE SEEN AS PROJECTED ALONG FW29–LINE.
6. FW STATIONS SHOWN ARE TO THE NEAREST ONE. SEE S SHEETS FOR CONSTRUCTION AND FOR DETAILED STATIONS.

DATE	ENGINEERING CERTIFICATION	SANTA CLARA VALLEY WATER DISTRICT
12/30/2020	REGISTERED PROFESSIONAL ENGINEER TOUHAN LEE No. C42456 CIVIL STATE OF CALIFORNIA	Valley Water
DESIGN Y. LEE		
DRAWN R. STILL		
CHECKED Y. LEE	PROJECT ENGINEER 12.30.2020 DATE	

PROJECT NAME AND SHEET DESCRIPTION:

LOWER CALERA CREEK FLOOD PROTECTION PROJECT

LEFT BANK PLAN AND PROFILE
E–LINE STA 33+00 TO 41+30
FW29–LINE STA 9+80 TO 13+00

SCALE	PROJECT NUMBER
AS SHOWN	40174005
VERIFY SCALES 0 1" IF NOT ONE INCH ON ORIGINAL DRAWING THIS SHEET, ADJUST SCALES ACCORDINGLY	SHEET CODE: C–08
	SHEET NUMBER: 43 OF 144

Attachment 4
Page 43 of 144

USERNAME: Jennford 12/24/2020 10:53 AM
FILENAME: K:\Active Projects\MP–40174005\Lower Calera Creek Project\SHEETS\C–08.dwg
DOCUMENT NUMBER: CAE_CY–C–4018–65948

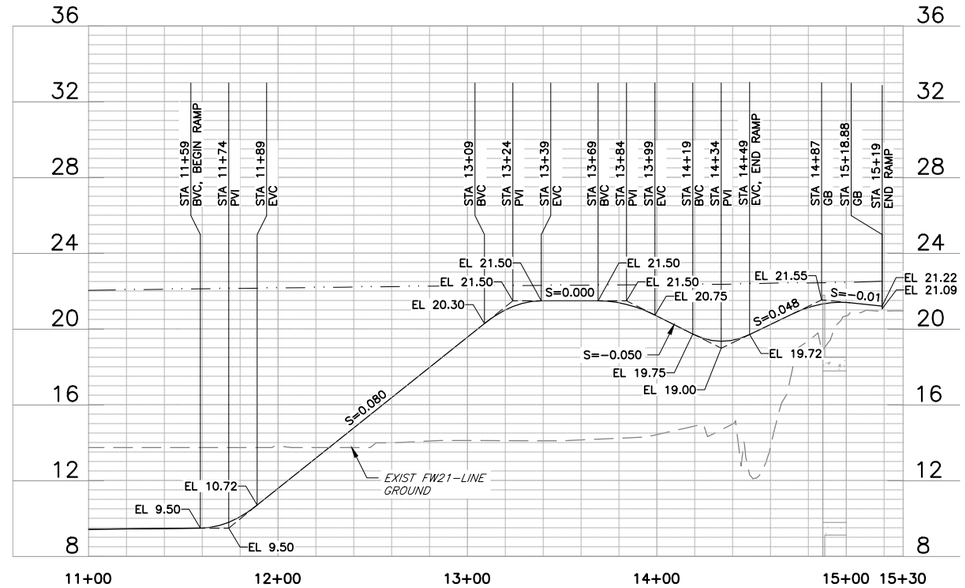

RAMP A PROFILE

HORIZ: 1" = 40'
VERT: 1" = 4'

RAMP A PROFILE		
FW21-LINE STATION	ELEVATION	NOTE
11+59.00	9.50	BVC
11+64.00	9.54	CURVE L=30'
11+69.00	9.64	
11+74.00	9.81	
11+79.00	10.05	
11+84.00	10.35	
11+89.00	10.72	EVC
11+89.00 TO 13+09.00		S=0.08
13+09.00	20.30	BVC
13+14.00	20.67	CURVE L=30'
13+19.00	20.97	
13+24.00	21.20	
13+29.00	21.37	
13+34.00	21.47	
13+39.00	21.50	EVC
13+39.00 TO 13+69.00		S=0.00
13+69.00	21.50	BVC
13+74.00	21.48	CURVE L=30'
13+79.00	21.42	
13+84.00	21.31	
13+89.00	21.17	
13+94.00	20.98	
13+99.00	20.75	EVC
13+99.00 TO 14+19.00		S=-0.05

RAMP A PROFILE		
FW21-LINE STATION	ELEVATION	NOTE
14+19.00	19.75	BVC
14+24.00	19.54	CURVE L=30'
14+29.00	19.41	
14+34.00	19.37	
14+39.00	19.40	
14+44.00	19.52	
14+49.00	19.72	EVC
14+49.00 TO 14+72.00		S=0.0481
14+72.00	20.83	BVC
14+77.00	21.05	CURVE L=30'
14+82.00	21.21	
14+87.00	21.33	
14+92.00	21.40	
14+97.00	21.43	
15+02.00	21.40	EVC
15+02.00 TO 15+18.88		S=-0.01
15+18.88	21.22	
15+19.00	21.09	

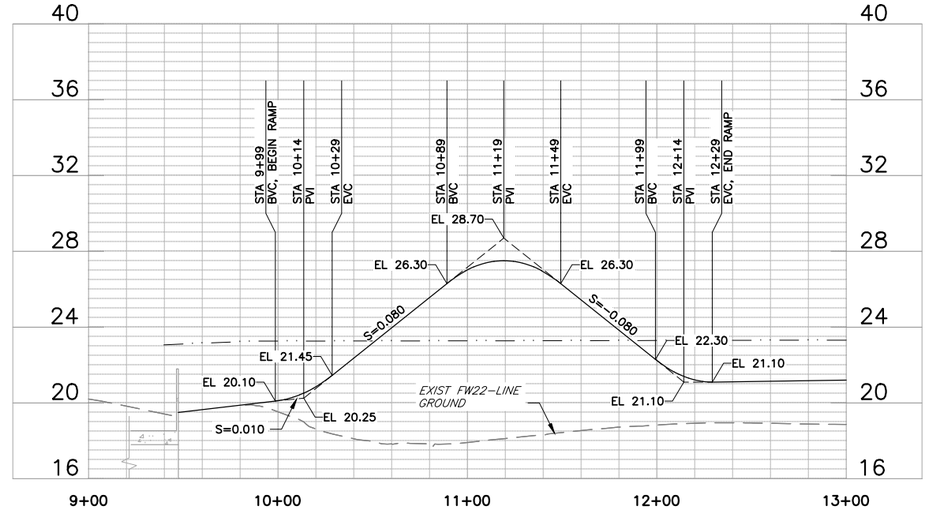

RAMP B PROFILE

HORIZ: 1" = 40'
VERT: 1" = 4'

RAMP B PROFILE		
FW22-LINE STATION	ELEVATION	NOTE
9+38.60 TO 9+98.60		S=0.01
9+98.60	20.10	BVC
10+03.60	20.18	CURVE L=30'
10+08.60	20.32	
10+13.60	20.51	
10+18.60	20.77	
10+23.60	21.08	
10+28.60	21.45	EVC
10+28.60 TO 10+89.23		S=0.08
10+89.23	26.30	BVC
10+99.23	26.97	CURVE L=60'
11+09.23	27.37	
11+19.23	27.50	
11+29.23	27.37	
11+39.23	26.97	
11+49.23	26.30	EVC
11+49.23 TO 11+99.23		S=-0.08
11+99.23	22.30	BVC
12+04.23	21.93	CURVE L=30'
12+09.23	21.63	
12+14.23	21.40	
12+19.23	21.23	
12+24.23	21.13	
12+29.23	21.10	EVC

REV	DESCRIPTION	DATE	APPR	REFERENCE INFORMATION AND NOTES

Attachment 4
Page 44 of 144

DATE 12/30/2020
DESIGN Y. LEE
DRAWN R. STILL
CHECKED Y. LEE

ENGINEERING CERTIFICATION
REGISTERED PROFESSIONAL ENGINEER YOUHAN LEE No. C42456 CIVIL STATE OF CALIFORNIA
12.30.2020
PROJECT ENGINEER DATE

SANTA CLARA VALLEY WATER DISTRICT
Valley Water

PROJECT NAME AND SHEET DESCRIPTION:
LOWER CALERA CREEK
FLOOD PROTECTION PROJECT
RAMP PROFILES AND TABLES

SCALE AS SHOWN
VERIFY SCALES 0 1"
IF NOT 1" INCH ON ORIGINAL DRAWING IF NOT 1" INCH ON THIS SHEET, ADJUST SCALES ACCORDINGLY

PROJECT NUMBER 40174005
SHEET CODE: C-09
SHEET NUMBER: 44 OF 144

Attachment 4
Page 44 of 144

USERNAME: Jennford 12/23/2020 3:48 PM
FILENAME: K:\Active Projects\MP-40174005\Lower Calera Creek Project\SHEETS\C-09.dwg
DOCUMENT NUMBER: CAE_CY-C-4018-65949

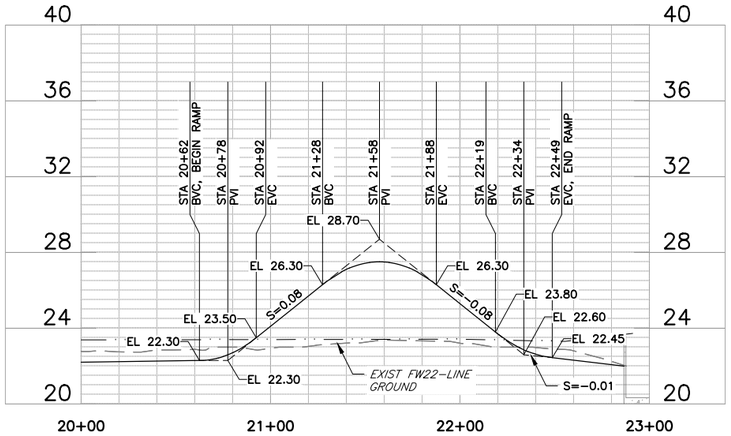

RAMP C PROFILE

HORIZ: 1" = 40'
VERT: 1" = 4'

RAMP C PROFILE		
FW22-LINE STATION	ELEVATION	NOTE
20+62.50	22.30	BVC
20+67.50	22.33	CURVE L=30'
20+72.50	22.43	
20+77.50	22.60	
20+82.50	22.83	
20+87.50	23.13	
20+92.50	23.50	EVC
20+92.50 TO 21+27.50		S=0.08
21+27.50	26.30	BVC
21+37.50	26.97	CURVE L=60'
21+47.50	27.37	
21+57.50	27.50	
21+67.50	27.37	
21+77.50	26.97	
21+87.50	26.30	EVC
21+87.50 TO 22+18.75		S=-0.08
22+18.75	23.80	BVC
22+23.75	23.43	CURVE L=30'
22+28.75	23.12	
22+33.75	22.86	
22+38.75	22.67	
22+43.75	22.53	
22+48.75	22.45	EVC
22+48.75 TO 22+80.00		S=-0.01

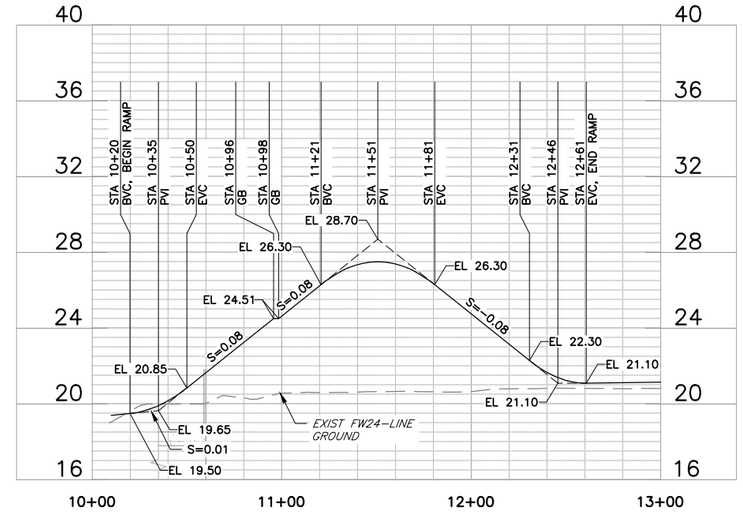

RAMP E PROFILE

HORIZ: 1" = 40'
VERT: 1" = 4'

RAMP E PROFILE		
FW24-LINE STATION	ELEVATION	NOTE
10+10.00 TO 10+19.90		S=0.01
10+19.90	19.50	BVC
10+24.90	19.58	CURVE L=30'
10+29.90	19.72	
10+34.90	19.91	
10+39.90	20.17	
10+44.90	20.48	
10+49.90	20.85	EVC
10+49.90 TO 10+95.70		S=0.08
10+95.70 TO 10+98.40	24.51	S=0.00
10+98.40 TO 11+20.75		S=0.08
11+20.75	26.30	BVC
11+30.75	26.97	CURVE L=60'
11+40.75	27.37	
11+50.75	27.50	
11+60.75	27.37	
11+70.75	26.97	
11+80.75	26.30	EVC
11+80.75 TO 12+30.75		S=-0.08
12+30.75	22.30	BVC
12+35.75	21.93	CURVE L=30'
12+40.75	21.63	
12+45.75	21.40	
12+50.75	21.23	
12+55.75	21.13	
12+60.75	21.10	EVC

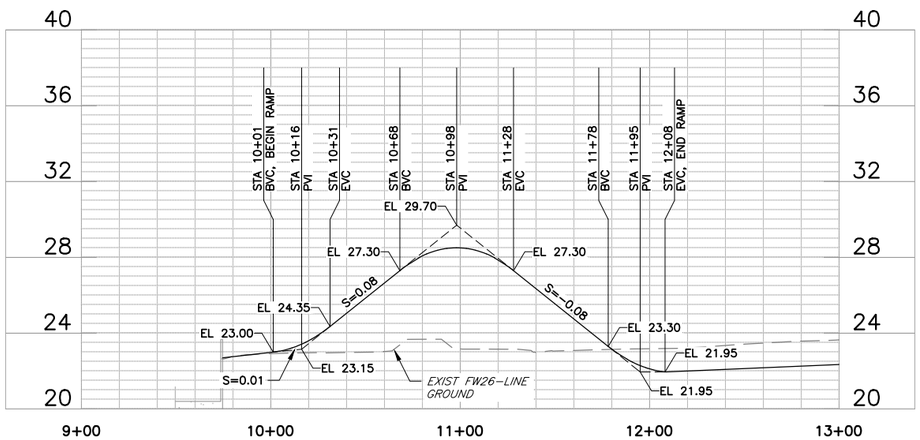

RAMP D PROFILE

HORIZ: 1" = 40'
VERT: 1" = 4'

RAMP D PROFILE		
FW26-LINE STATION	ELEVATION	NOTE
9+73.00 TO 10+01.25		S=0.01
10+01.25	23.00	BVC
10+06.25	23.08	CURVE L=30'
10+11.25	23.22	
10+16.25	23.41	
10+21.25	23.67	
10+26.25	23.98	
10+31.25	24.35	EVC
10+31.25 TO 10+68.13		S=0.08
10+68.13	27.30	BVC
10+78.13	27.97	CURVE L=60'
10+88.13	28.37	
10+98.13	28.50	
11+08.13	28.37	
11+18.13	27.97	
11+28.13	27.30	EVC
11+28.13 TO 11+78.13		S=-0.08
11+78.13	23.30	BVC
11+83.13	22.93	CURVE L=30'
11+88.13	22.62	
11+93.13	22.36	
11+98.13	22.17	
12+03.13	22.03	
12+08.13	21.95	EVC

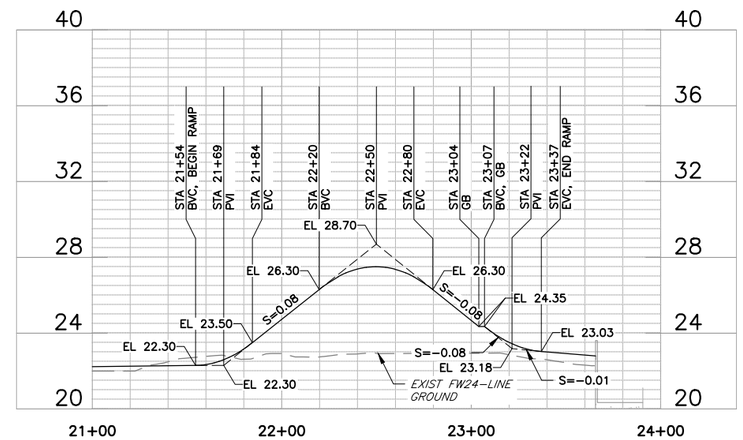

RAMP F PROFILE

HORIZ: 1" = 40'
VERT: 1" = 4'

RAMP F PROFILE		
FW24-LINE STATION	ELEVATION	NOTE
21+54.50	22.30	BVC
21+59.50	22.33	CURVE L=30'
21+64.50	22.43	
21+69.50	22.60	
21+74.50	22.83	
21+79.50	23.13	
21+84.50	23.50	EVC
21+84.50 TO 22+19.50		S=0.08
22+19.75	26.30	BVC
22+29.75	26.97	CURVE L=60'
22+39.75	27.37	
22+49.75	27.50	
22+59.75	27.37	
22+69.75	26.97	
22+79.75	26.30	EVC
22+79.75 TO 23+04.00		S=-0.08
23+04.00 TO 23+07.00	24.35	S=0.00
23+07.00	24.35	BVC
23+12.00	23.98	CURVE L=30'
23+17.00	23.67	
23+22.00	23.42	
23+27.00	23.23	
23+32.00	23.10	
23+37.00	23.03	EVC
23+37.00 TO 23+65.00		S=-0.01

REV	DESCRIPTION	DATE	APPR	REFERENCE INFORMATION AND NOTES

DATE 12/30/2020
DESIGN Y. LEE
DRAWN R. STILL
CHECKED Y. LEE

ENGINEERING CERTIFICATION
REGISTERED PROFESSIONAL ENGINEER YOUHAN LEE No. C42456 CIVIL STATE OF CALIFORNIA
PROJECT ENGINEER 12.30.2020 DATE

SANTA CLARA VALLEY WATER DISTRICT
Valley Water

PROJECT NAME AND SHEET DESCRIPTION:
LOWER CALERA CREEK
FLOOD PROTECTION PROJECT
RAMP PROFILES AND TABLES

SCALE AS SHOWN
VERIFY SCALES 0 1"
IF NOT ONE INCH ON ORIGINAL DRAWING IF NOT ONE INCH ON THIS SHEET, ADJUST SCALES ACCORDINGLY

PROJECT NUMBER 40174005
SHEET CODE: C-10
SHEET NUMBER: 45 OF 144

DOCUMENT NUMBER: CAE_CY-C-4018-65950
USERNAME: Jennford 12/23/2020 3:49 PM
FILENAME: K:\Active Projects\MP-40174005\Lower Calera Creek Project\SHEETS\C-10.dwg

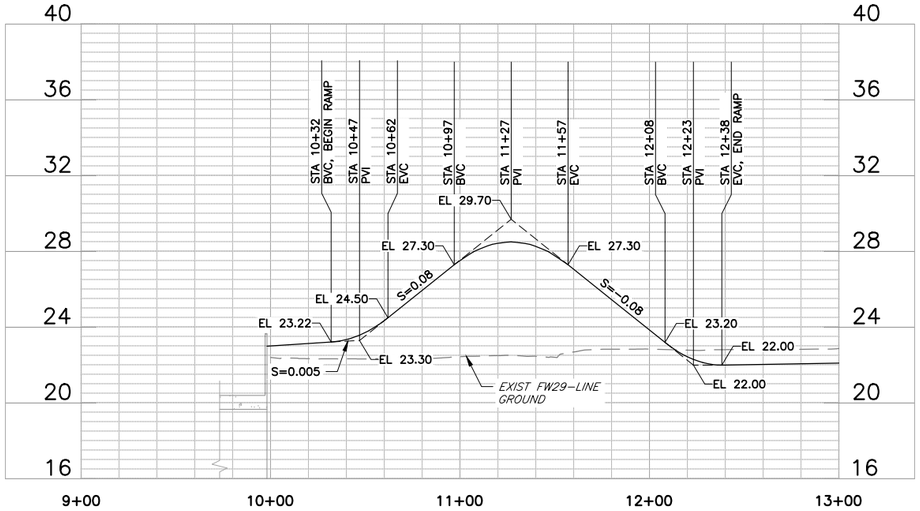

RAMP G PROFILE

HORIZ: 1" = 40'
VERT: 1" = 4'

RAMP G PROFILE		
FW29-LINE STATION	ELEVATION	NOTE
10+02.00 TO 10+32.00		S=0.005
10+32.00	23.22	BVC
10+37.00	23.28	CURVE L=30'
10+42.00	23.40	
10+47.00	23.58	
10+52.00	23.82	
10+57.00	24.13	
10+62.00	24.50	EVC
10+62.00 TO 10+97.00		S=0.08
10+97.00	27.30	BVC
11+07.00	27.97	CURVE L=60'
11+17.00	28.37	
11+27.00	28.50	
11+37.00	28.37	
11+47.00	27.97	
11+57.00	27.30	EVC
11+57.00 TO 12+08.25		S=-0.08
12+08.25	23.20	BVC
12+13.25	22.83	CURVE L=30'
12+18.25	22.53	
12+23.25	22.30	
12+28.25	22.13	
12+33.25	22.03	
12+38.25	22.00	EVC

USERNAME: Jennford 12/23/2020 3:49 PM
FILENAME: K:\Active Projects\MP-40174005\Lower Calera Creek Project\SHEETS\C-11.dwg

DOCUMENT NUMBER: CAE_CY-C-4018-65951

REV	DESCRIPTION	DATE	APPR	REFERENCE INFORMATION AND NOTES

Attachment 4
Page 46 of 144

DATE 12/30/2020
DESIGN Y. LEE
DRAWN R. STILL
CHECKED Y. LEE

ENGINEERING CERTIFICATION
REGISTERED PROFESSIONAL ENGINEER YOUHAN LEE No. C42456 CIVIL STATE OF CALIFORNIA
PROJECT ENGINEER 12.30.2020 DATE

SANTA CLARA VALLEY WATER DISTRICT
Valley Water

PROJECT NAME AND SHEET DESCRIPTION:
LOWER CALERA CREEK
FLOOD PROTECTION PROJECT
RAMP PROFILES AND TABLES

SCALE AS SHOWN
VERIFY SCALES 0 1"
IF NOT ONE INCH ON ORIGINAL DRAWING IF NOT ONE INCH ON THIS SHEET, ADJUST SCALES ACCORDINGLY

PROJECT NUMBER 40174005
SHEET CODE: C-11
SHEET NUMBER: 46 OF 144

Attachment 4
Page 46 of 144

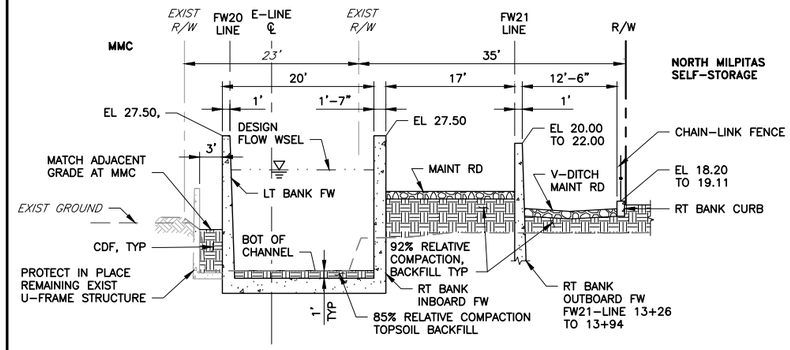

TYPICAL SECTION D C-01 C-05 — LT BANK FW (FW20-LINE STA 13+43 TO 13+80)
RT BANK FW (FW21-LINE STA 13+75 TO 14+20)
SCALE: 1" = 10'

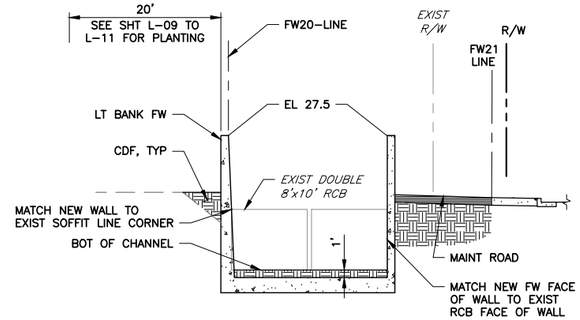

TYPICAL SECTION G C-01 C-05 — LT BANK FW (FW20-LINE STA 14+29 TO 14+76)
WALL CONNECTION CONDITION (FW21-LINE STA 14+87 TO 15+17)
SCALE: 1" = 10'

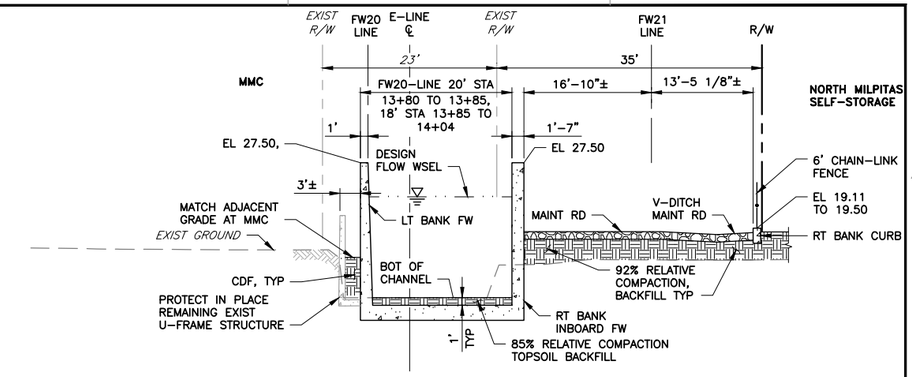

TYPICAL SECTION E C-01 C-05 — LT BANK FW (FW20-LINE STA 13+80 TO 14+03)
RT BANK FW (FW21-LINE STA 14+20 TO 14+45)
SCALE: 1" = 10'

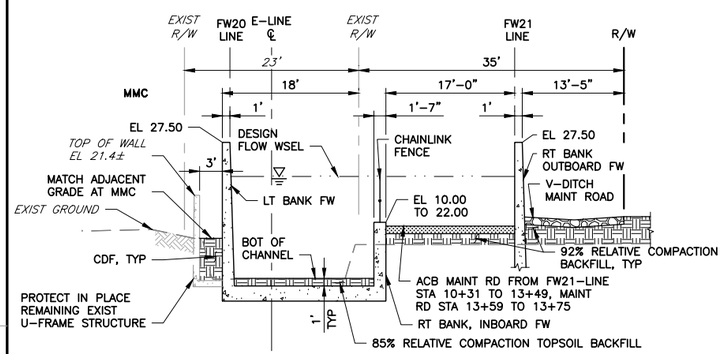

TYPICAL SECTION C C-01 C-05 — LT BANK FW (FW20-LINE STA 11+27 TO 13+43)
RT BANK FW (FW21-LINE STA 11+59 TO 13+75)
SCALE: 1" = 10'

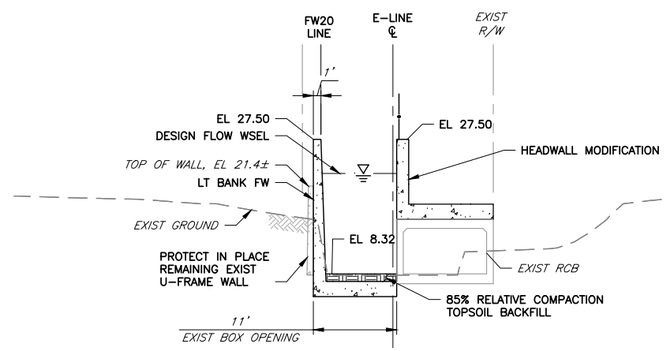

TYPICAL SECTION A C-01 — LT BANK FW (FW20-LINE STA 10+00 TO 10+16)
SCALE: 1" = 10'

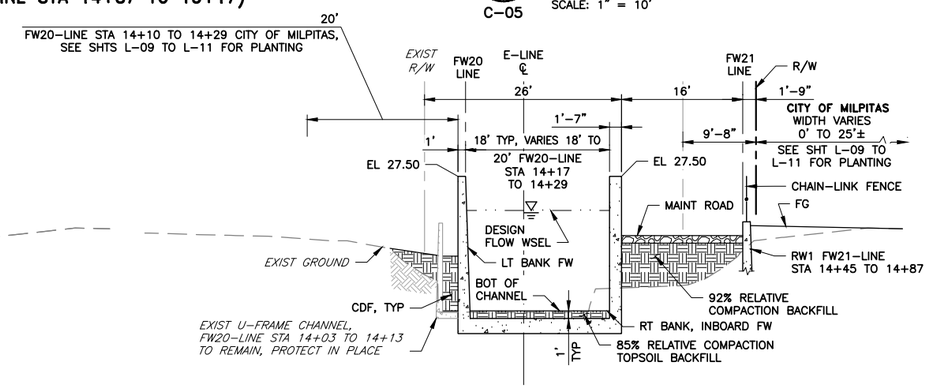

TYPICAL SECTION F C-01 C-05 — LT BANK FW (FW20-LINE STA 14+03 TO 14+29)
RT BANK FW (FW21-LINE STA 14+45 TO 14+87)
SCALE: 1" = 10'

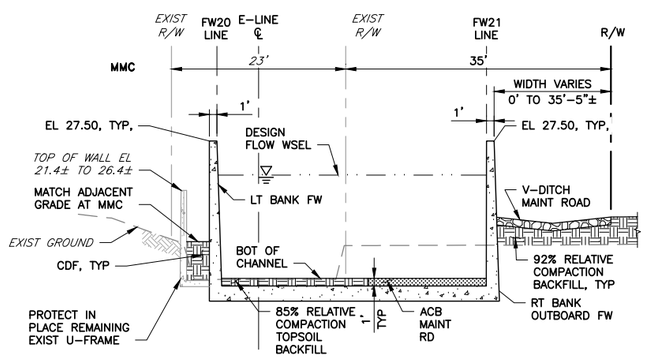

TYPICAL SECTION B C-01 C-05 — LT BANK FW (FW20-LINE STA 10+16 TO 11+27)
RT BANK FW (FW21-LINE STA 10+31 TO 11+59)
SCALE: 1" = 10'

REV	DESCRIPTION	DATE	APPR

Attachment 4
Page 47 of 144

REFERENCE INFORMATION AND NOTES
1. TYPICAL SECTIONS ARE SHOWN LOOKING UPSTREAM.
2. TYPICAL SECTION STATIONS ARE APPROXIMATE LOCATION REFERENCES.
3. SEE STRUCTURAL SHEETS FOR FLOODWALL PLAN, TYPES, ELEVATIONS, SECTIONS, AND DETAILS.
4. FOR MAINTENANCE ROAD, SEE SECTION B, SHEET C-22.
5. FOR ACB MAINTENANCE ROAD, SEE SECTION C, SHEET C-22.

DATE 12/30/2020
DESIGN Y. LEE
DRAWN R. STILL
CHECKED Y. LEE

ENGINEERING CERTIFICATION
REGISTERED PROFESSIONAL ENGINEER YOUHAN LEE No. C42456 CIVIL STATE OF CALIFORNIA
12.30.2020
PROJECT ENGINEER DATE

SANTA CLARA VALLEY WATER DISTRICT
Valley Water

PROJECT NAME AND SHEET DESCRIPTION:
LOWER CALERA CREEK FLOOD PROTECTION PROJECT
TYPICAL SECTIONS

SCALE: AS SHOWN
VERIFY SCALES: 0 1"
IF NOT ONE INCH ON ORIGINAL DRAWING IF NOT ONE INCH ON THIS SHEET, ADJUST SCALES ACCORDINGLY
PROJECT NUMBER: 40174005
SHEET CODE: C-12
SHEET NUMBER: 47 OF 144

Attachment 4
Page 47 of 144

USERNAME: Jennford 12/23/2020 3:49 PM
FILENAME: K:\Active Projects\MP-40174005\Lower Calera Creek Project\SHEETS\C-12.dwg
DOCUMENT NUMBER: CAE_CY-C-4018-65952

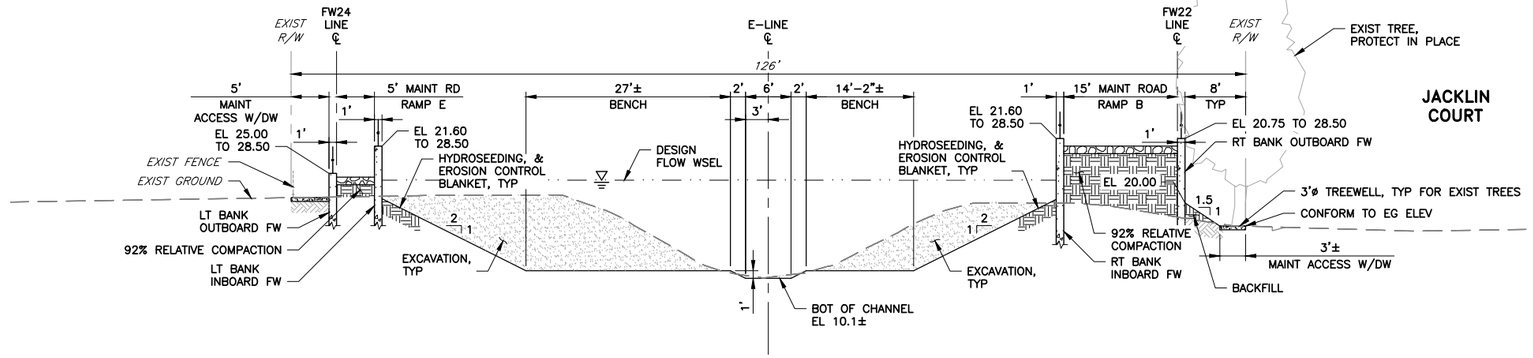

TYPICAL SECTION E3 / C-02 — LT BANK FW (FW24-LINE STA 10+98 TO 12+61) / RT BANK FW (FW22-LINE STA 9+99 TO 12+29)

C-06

SCALE: 1" = 10'

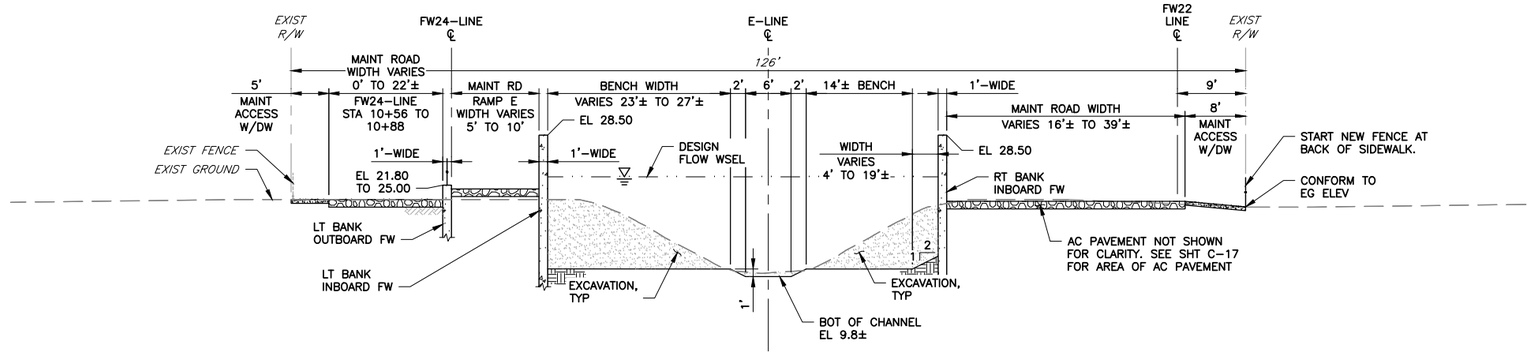

TYPICAL SECTION E2 / C-02 — LT BANK FW (FW24-LINE STA 10+56 TO 10+98) / RT BANK FW (FW22-LINE STA 9+69 TO 9+99)

C-06

SCALE: 1" = 10'

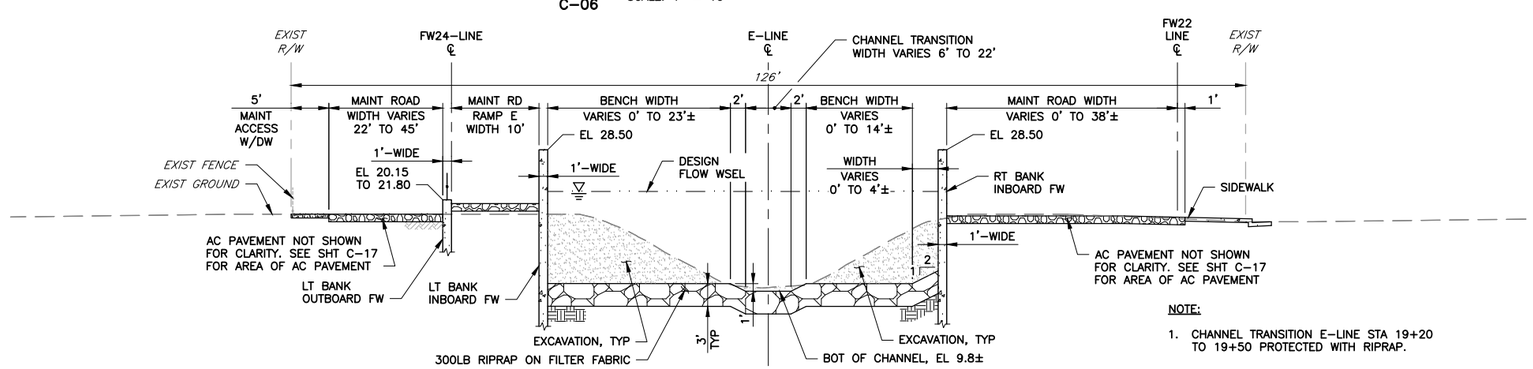

NOTE:

1. CHANNEL TRANSITION E-LINE STA 19+20 TO 19+50 PROTECTED WITH RIPRAP.

TYPICAL SECTION E1 / C-02 — LT BANK FW (FW24-LINE STA 10+11 TO 10+56) / RT BANK FW (FW22-LINE STA 9+48 TO 9+69)

C-06

SCALE: 1" = 10'

REV	DESCRIPTION	DATE	APPR

Attachment 4
Page 48 of 144

REFERENCE INFORMATION AND NOTES

1. TYPICAL SECTIONS ARE SHOWN LOOKING UPSTREAM.
2. TYPICAL SECTION STATIONS ARE APPROXIMATE LOCATION REFERENCES.
3. SEE STRUCTURAL SHEETS FOR FLOODWALL PLAN, TYPES, ELEVATIONS, SECTIONS, AND DETAILS.
4. FOR MAINTENANCE ACCESS, SEE SEC A, SHEET C-22.
5. FOR MAINTENANCE ROAD, SEE SEC B, SHEET C-22.
6. FOR LEVEE EXCAVATION, SEE SEC F, SHEET C-22.
7. FOR LEVEE BACKFILL, SEE SEC D, SHEET C-22. TOP SOIL BACKFILL SEE SEC B, SHEET C-23.

DATE 12/30/2020
DESIGN Y. LEE
DRAWN R. STILL
CHECKED Y. LEE

ENGINEERING CERTIFICATION

REGISTERED PROFESSIONAL ENGINEER YOUHAN LEE No. C42456 CIVIL STATE OF CALIFORNIA

PROJECT ENGINEER — DATE 12.30.2020

SANTA CLARA VALLEY WATER DISTRICT

Valley Water

PROJECT NAME AND SHEET DESCRIPTION:

LOWER CALERA CREEK FLOOD PROTECTION PROJECT

TYPICAL SECTIONS

SCALE: AS SHOWN

VERIFY SCALES: 0 — 1"

IF NOT 1" INCH ON ORIGINAL DRAWING IF NOT 1" INCH ON THIS SHEET, ADJUST SCALES ACCORDINGLY

PROJECT NUMBER: 40174005

SHEET CODE: C-13

SHEET NUMBER: 48 OF 144

Attachment 4
Page 48 of 144

USERNAME: Jennford 12/23/2020 3:49 PM
FILENAME: K:\Active Projects\MP-40174005\Lower Calera Creek Project\SHEETS\C-13.dwg
DOCUMENT NUMBER: CAE_CY-C-4018-65953

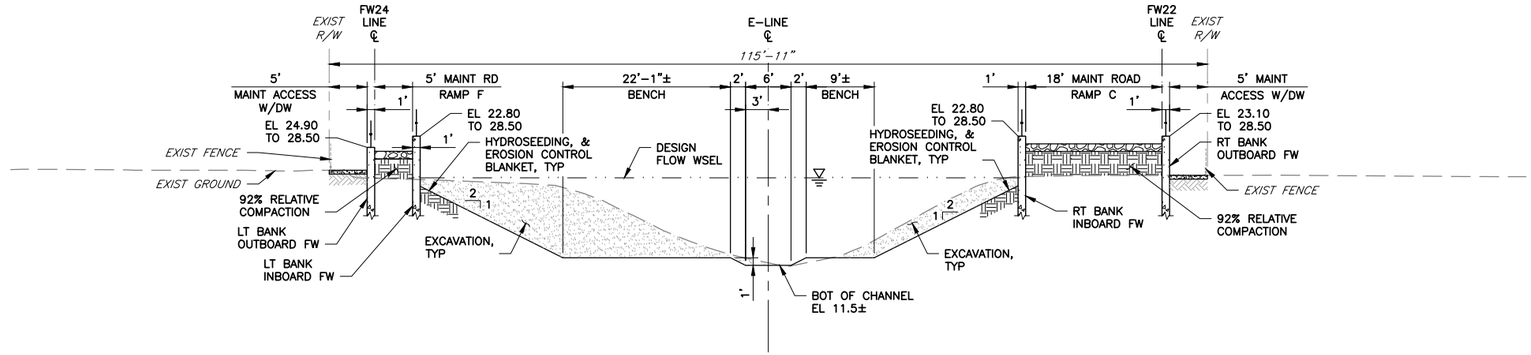

TYPICAL SECTION G1 / C-03 — LT BANK FW (FW24-LINE STA 21+54 TO 23+04)
RT BANK FW (FW22-LINE STA 20+62 TO 22+49)
SCALE: 1" = 10'
C-07

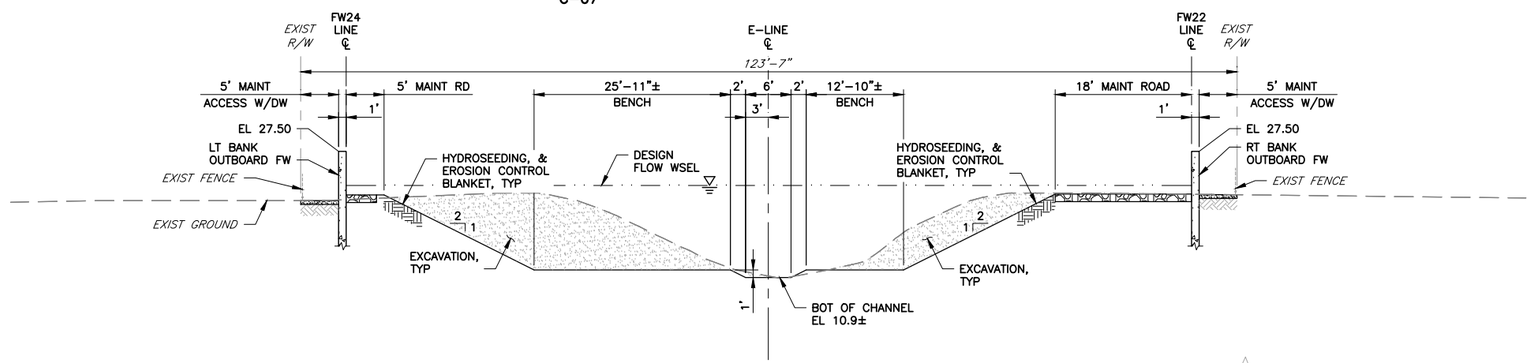

TYPICAL SECTION F / C-02 — LT BANK FW (FW24-LINE STA 14+84 TO 21+54)
RT BANK FW (FW22-LINE STA 17+03 TO 20+62)
SCALE: 1" = 10'
C-03
C-06
C-07

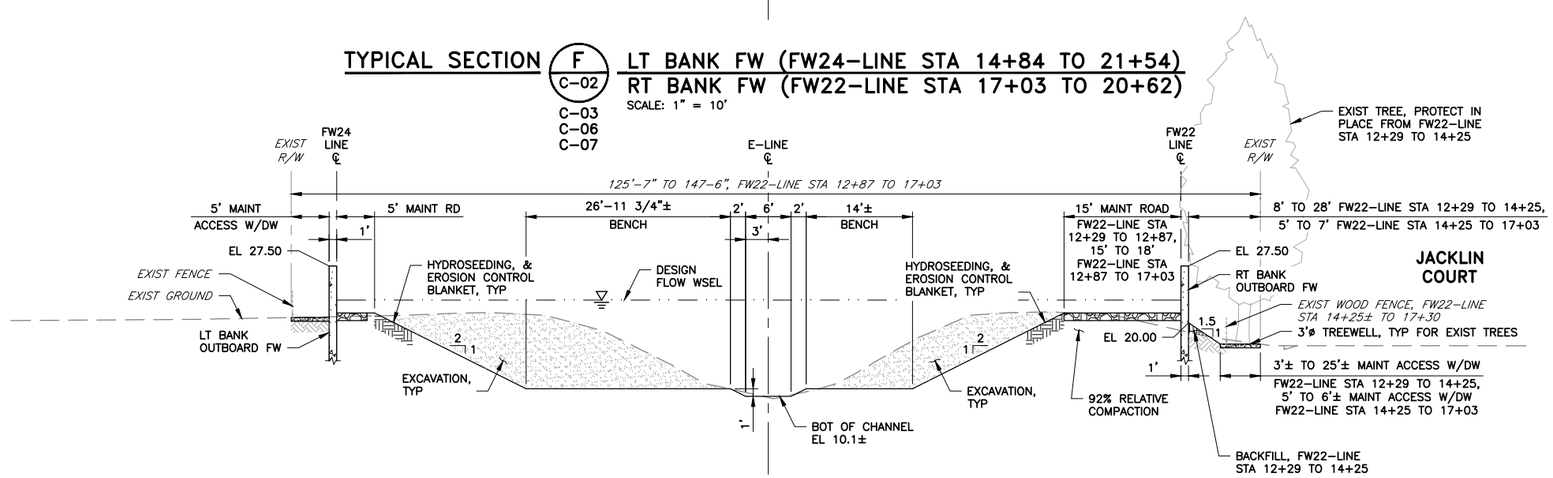

TYPICAL SECTION E4 / C-02 — LT BANK FW (FW24-LINE STA 12+61 TO 14+84)
RT BANK FW (FW22-LINE STA 12+29 TO 17+03)
SCALE: 1" = 10'
C-06

REV	DESCRIPTION	DATE	APPR

Attachment 4
Page 49 of 144

REFERENCE INFORMATION AND NOTES
1. TYPICAL SECTIONS ARE SHOWN LOOKING UPSTREAM.
2. TYPICAL SECTION STATIONS ARE APPROXIMATE LOCATION REFERENCES.
3. SEE STRUCTURAL SHEETS FOR FLOODWALL PLAN, TYPES, ELEVATIONS, SECTIONS, AND DETAILS.
4. FOR MAINTENANCE ACCESS, SEE SEC A, SHEET C-22.
5. FOR MAINTENANCE ROAD, SEE SEC B, SHEET C-22.
6. FOR LEVEE EXCAVATION, SEE SEC F, SHEET C-22.
7. FOR LEVEE BACKFILL, SEE SEC D, SHEET C-22. TOP SOIL BACKFILL SEE SEC B, SHEET C-23.

DATE 12/30/2020
DESIGN Y. LEE
DRAWN R. STILL
CHECKED Y. LEE

ENGINEERING CERTIFICATION
REGISTERED PROFESSIONAL ENGINEER YOUHAN LEE No. C42456 CIVIL STATE OF CALIFORNIA
12.30.2020
PROJECT ENGINEER DATE

SANTA CLARA VALLEY WATER DISTRICT
Valley Water

PROJECT NAME AND SHEET DESCRIPTION:
LOWER CALERA CREEK
FLOOD PROTECTION PROJECT
TYPICAL SECTIONS

SCALE: AS SHOWN
VERIFY SCALES: 0 1" — IF NOT ONE INCH ON ORIGINAL DRAWING IF NOT ONE INCH ON THIS SHEET, ADJUST SCALES ACCORDINGLY
PROJECT NUMBER: 40174005
SHEET CODE: C-14
SHEET NUMBER: 49 OF 144

Attachment 4
Page 49 of 144

DOCUMENT NUMBER: CAE_CY-C-4018-65954
USERNAME: Jennford 12/23/2020 3:50 PM
FILENAME: K:\Active Projects\MP-40174005\Lower Calera Creek Project\SHEETS\C-14.dwg

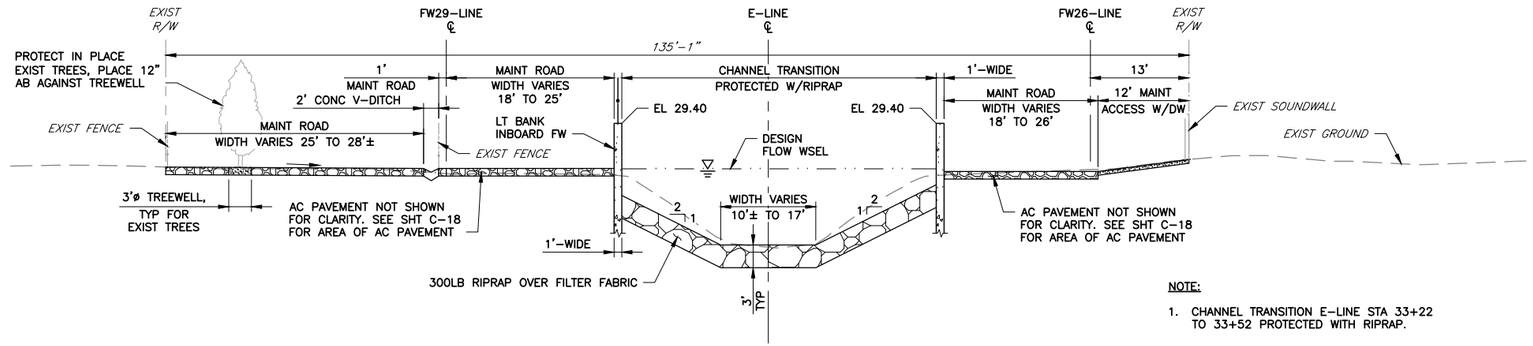

NOTE:

1. CHANNEL TRANSITION E–LINE STA 33+22 TO 33+52 PROTECTED WITH RIPRAP.

TYPICAL SECTION H (C–04) C–08 — LT BANK FW (FW29–LINE STA 9+99 TO 10+26) / RT BANK FW (FW26–LINE STA 9+76 TO 10+01)

SCALE: 1" = 10'

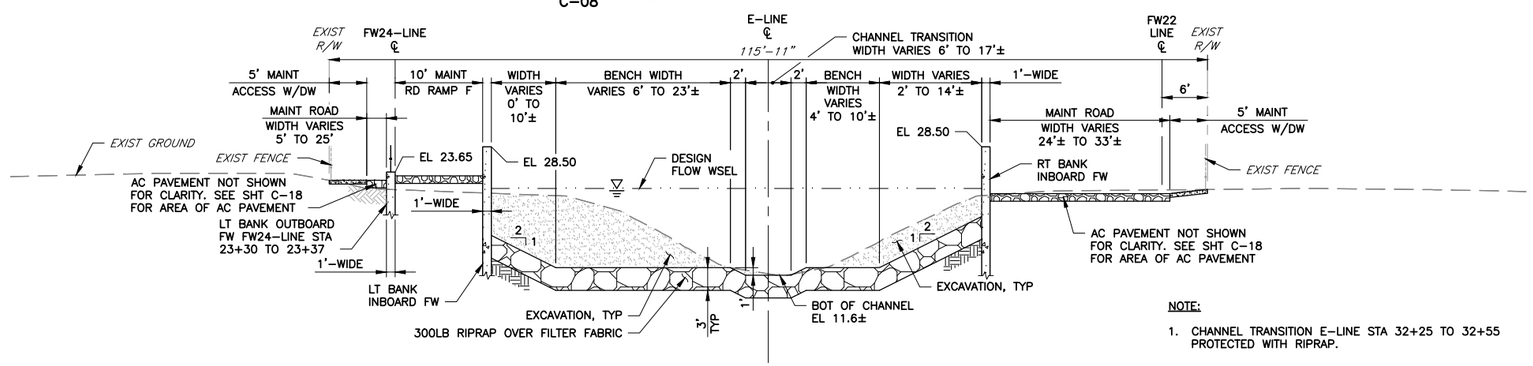

NOTE:

1. CHANNEL TRANSITION E–LINE STA 32+25 TO 32+55 PROTECTED WITH RIPRAP.

TYPICAL SECTION G3 (C–03) C–07 — LT BANK FW (FW24–LINE STA 23+30 TO 23+66) / RT BANK FW (FW22–LINE STA 22+60 TO 22+86)

SCALE: 1" = 10'

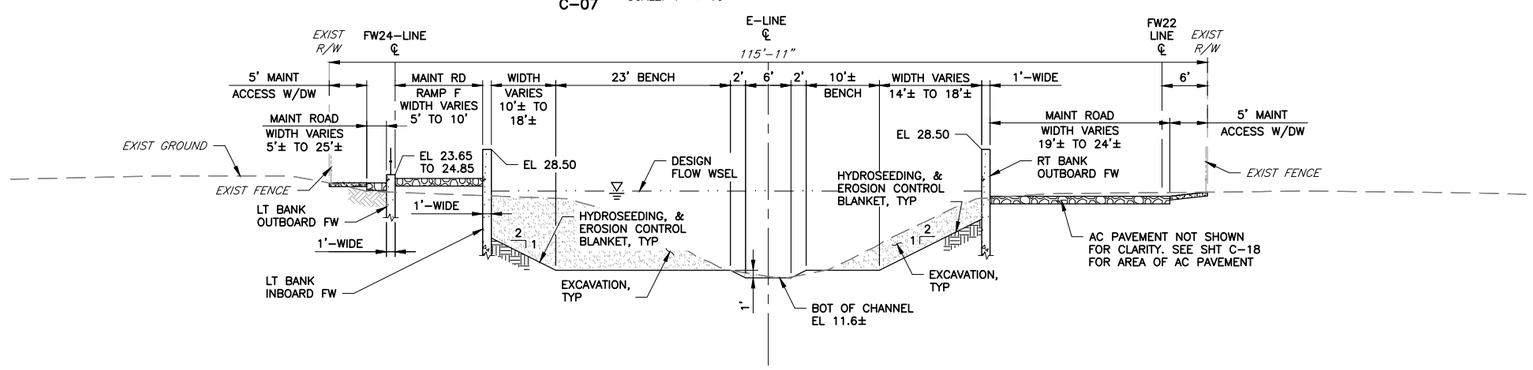

TYPICAL SECTION G2 (C–03) C–07 — LT BANK FW (FW24–LINE STA 23+04 TO 23+30) / RT BANK FW (FW22–LINE STA 22+49 TO 22+60)

SCALE: 1" = 10'

REV	DESCRIPTION	DATE	APPR

Attachment 4
Page 50 of 144

REFERENCE INFORMATION AND NOTES

1. TYPICAL SECTIONS ARE SHOWN LOOKING UPSTREAM.
2. TYPICAL SECTION STATIONS ARE APPROXIMATE LOCATION REFERENCES.
3. SEE STRUCTURAL SHEETS FOR FLOODWALL PLAN, TYPES, ELEVATIONS, SECTIONS, AND DETAILS.
4. FOR MAINTENANCE ACCESS, SEE SEC A, SHEET C–22.
5. FOR MAINTENANCE ROAD, SEE SEC B, SHEET C–22.
6. FOR LEVEE EXCAVATION, SEE SEC F, SHEET C–22.
7. FOR LEVEE BACKFILL, SEE SEC D, SHEET C–22. TOP SOIL BACKFILL SEE SEC B, SHEET C–23.

DATE 12/30/2020
DESIGN Y. LEE
DRAWN R. STILL
CHECKED Y. LEE

ENGINEERING CERTIFICATION
REGISTERED PROFESSIONAL ENGINEER YOUHAN LEE No. C42456 CIVIL STATE OF CALIFORNIA
12.30.2020
PROJECT ENGINEER DATE

SANTA CLARA VALLEY WATER DISTRICT
Valley Water

PROJECT NAME AND SHEET DESCRIPTION:
LOWER CALERA CREEK
FLOOD PROTECTION PROJECT
TYPICAL SECTIONS

SCALE: AS SHOWN
VERIFY SCALES: 0 1"
IF NOT ONE INCH ON ORIGINAL DRAWING IF NOT ONE INCH ON THIS SHEET, ADJUST SCALES ACCORDINGLY

PROJECT NUMBER: 40174005
SHEET CODE: C–15
SHEET NUMBER: 50 OF 144

Attachment 4
Page 50 of 144

DOCUMENT NUMBER: CAE_CY–C–4018–65955
USERNAME: Jennford 12/23/2020 3:50 PM
FILENAME: K:\Active Projects\MP–40174005\Lower Calera Creek Project\SHEETS\C–15.dwg

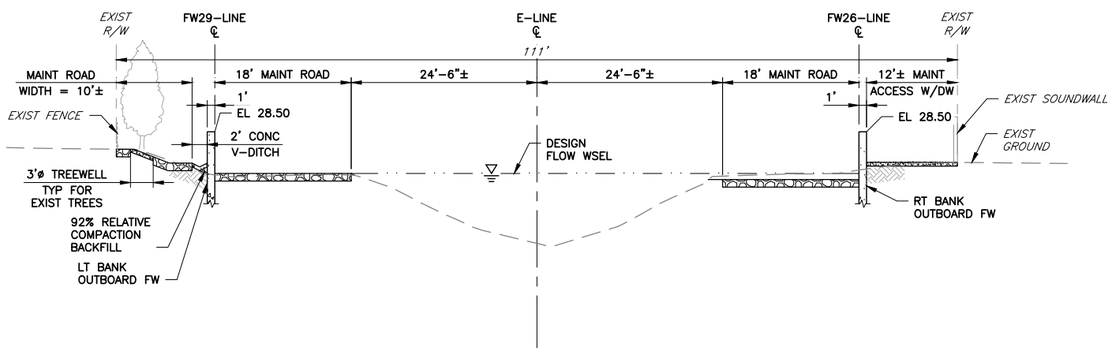

TYPICAL SECTION K C–04 C–08 LT BANK FW (FW29–LINE STA 12+38 TO 12+82)
RT BANK FW (FW26–LINE STA 12+08 TO 12+66)
SCALE: 1" = 10'

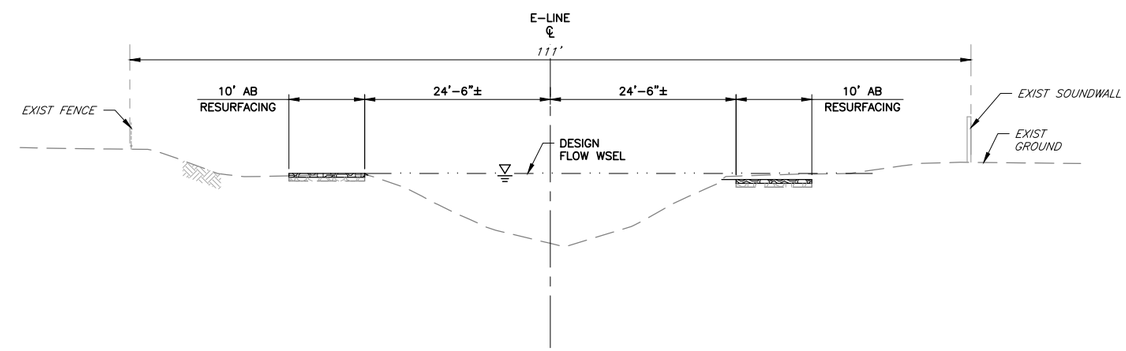

TYPICAL SECTION M C–04 C–08 E–LINE STA 38+00 TO 41+30
SCALE: 1" = 10'

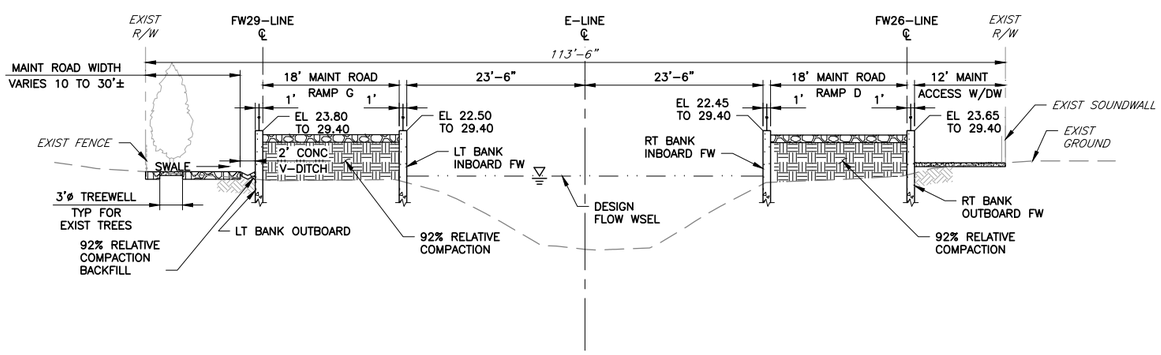

TYPICAL SECTION J C–04 C–08 LT BANK FW (FW29–LINE STA 10+26 TO 12+38)
RT BANK FW (FW26–LINE STA 10+01 TO 12+08)
SCALE: 1" = 10'

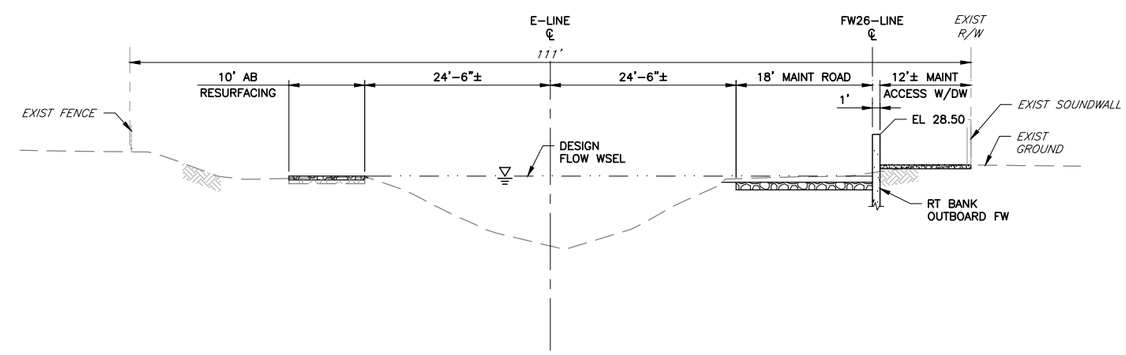

TYPICAL SECTION L C–04 C–08 LT BANK FW (E–LINE STA 36+10 TO 38+00)
RT BANK FW (FW26–LINE STA 12+66 TO 14+56)
SCALE: 1" = 10'

REV	DESCRIPTION	DATE	APPR

REFERENCE INFORMATION AND NOTES
1. TYPICAL SECTIONS ARE SHOWN LOOKING UPSTREAM.
2. TYPICAL SECTION STATIONS ARE APPROXIMATE LOCATION REFERENCES.
3. SEE STRUCTURAL SHEETS FOR FLOODWALL PLAN, TYPES, ELEVATIONS, SECTIONS, AND DETAILS.
4. FOR MAINTENANCE ACCESS, SEE SEC A, SHEET C–22.
5. FOR MAINTENANCE ROAD, SEE SEC B, SHEET C–22.
6. FOR AB RESURFACING, SEE DETAIL 7, SHEET C–21.

DATE 12/30/2020
DESIGN Y. LEE
DRAWN R. STILL
CHECKED Y. LEE

ENGINEERING CERTIFICATION
REGISTERED PROFESSIONAL ENGINEER YOUHAN LEE No. C42456 CIVIL STATE OF CALIFORNIA
12.30.2020
PROJECT ENGINEER DATE

SANTA CLARA VALLEY WATER DISTRICT
Valley Water

PROJECT NAME AND SHEET DESCRIPTION:
LOWER CALERA CREEK
FLOOD PROTECTION PROJECT
TYPICAL SECTIONS

SCALE: AS SHOWN
VERIFY SCALES: 0 1"
IF NOT ONE INCH ON ORIGINAL DRAWING IF NOT ONE INCH ON THIS SHEET, ADJUST SCALES ACCORDINGLY

PROJECT NUMBER: 40174005
SHEET CODE: C–16
SHEET NUMBER: 51 OF 144

DOCUMENT NUMBER: CAE_CY–C–4018–65956

USERNAME: Jennford 12/23/2020 3:50 PM
FILENAME: K:\Active Projects\MP-40174005\Lower Calera Creek Project\SHEETS\C-16.dwg

Attachment 4
Page 51 of 144

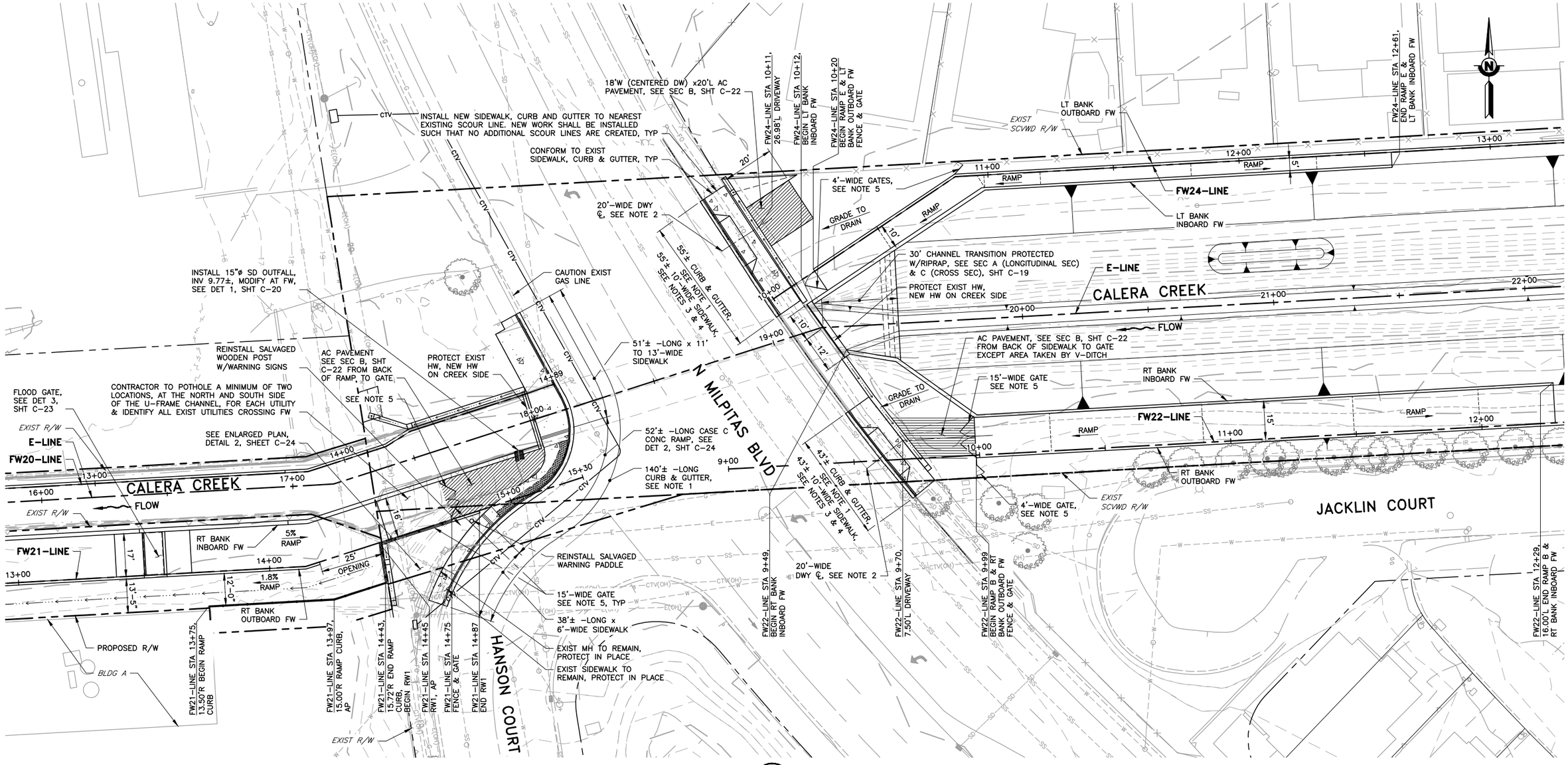

DETAIL 1 / C-01 — NORTH MILPITAS BOULEVARD CROSSING

SCALE: 1" = 20'

C-02
C-05
C-06

REV	DESCRIPTION	DATE	APPR

REFERENCE INFORMATION AND NOTES

1. FOR CURB AND GUTTER DETAILS, SEE CITY OF MILPITAS STANDARD DRAWING NO. 410.
2. FOR DRIVEWAY DETAILS, SEE CITY OF MILPITAS STANDARD DRAWING NO. 432, (COMMERCIAL ONE-WAY 20'W).
3. FOR SIDEWALK DETAILS, SEE CITY OF MILPITAS STANDARD DRAWING NO. 426, (10'W).
4. FOR SIDEWALK TRANSITION DETAILS, SEE CITY OF MILPITAS STANDARD DRAWING NO 436.
5. INSTALL 6' CHAIN-LINK FENCE AND GATE, FIELD ADJUST AS NEEDED. SEE DETAIL ST-200, SHEET C-21. REFASTEN SIGNS ON GATES, TOTAL OF 6.
6. SEE SHT S-47 FOR FW22 AND FW24 FLOODWALL LAYOUT NEAR NORTH MILPITAS BLVD.
7. FW AND RW STATIONS SHOWN ARE ROUNDED TO THE NEAREST ONE. SEE S SHEETS FOR CONSTRUCTION AND FOR DETAILED STATIONS.

DATE	
12/30/2020	
DESIGN	Y. LEE
DRAWN	R. STILL
CHECKED	Y. LEE

ENGINEERING CERTIFICATION

REGISTERED PROFESSIONAL ENGINEER YOUHAN LEE No. C42456 CIVIL STATE OF CALIFORNIA

PROJECT ENGINEER — DATE 12.30.2020

SANTA CLARA VALLEY WATER DISTRICT

Valley Water

PROJECT NAME AND SHEET DESCRIPTION:

LOWER CALERA CREEK FLOOD PROTECTION PROJECT

NORTH MILPITAS BOULEVARD CROSSING DETAIL

SCALE	PROJECT NUMBER
AS SHOWN	40174005
VERIFY SCALES	SHEET CODE:
0 1" — IF NOT ONE INCH ON ORIGINAL DRAWING, ADJUST SCALES ACCORDINGLY	C-17
	SHEET NUMBER: 52 OF 144

DOCUMENT NUMBER: CAE_CY-C-4018-65957

USERNAME: Jennford 12/24/2020 11:00 AM
FILENAME: K:\Active Projects\MP-40174005\Lower Calera Creek Project\SHEETS\C-17.dwg

Attachment 4
Page 52 of 144

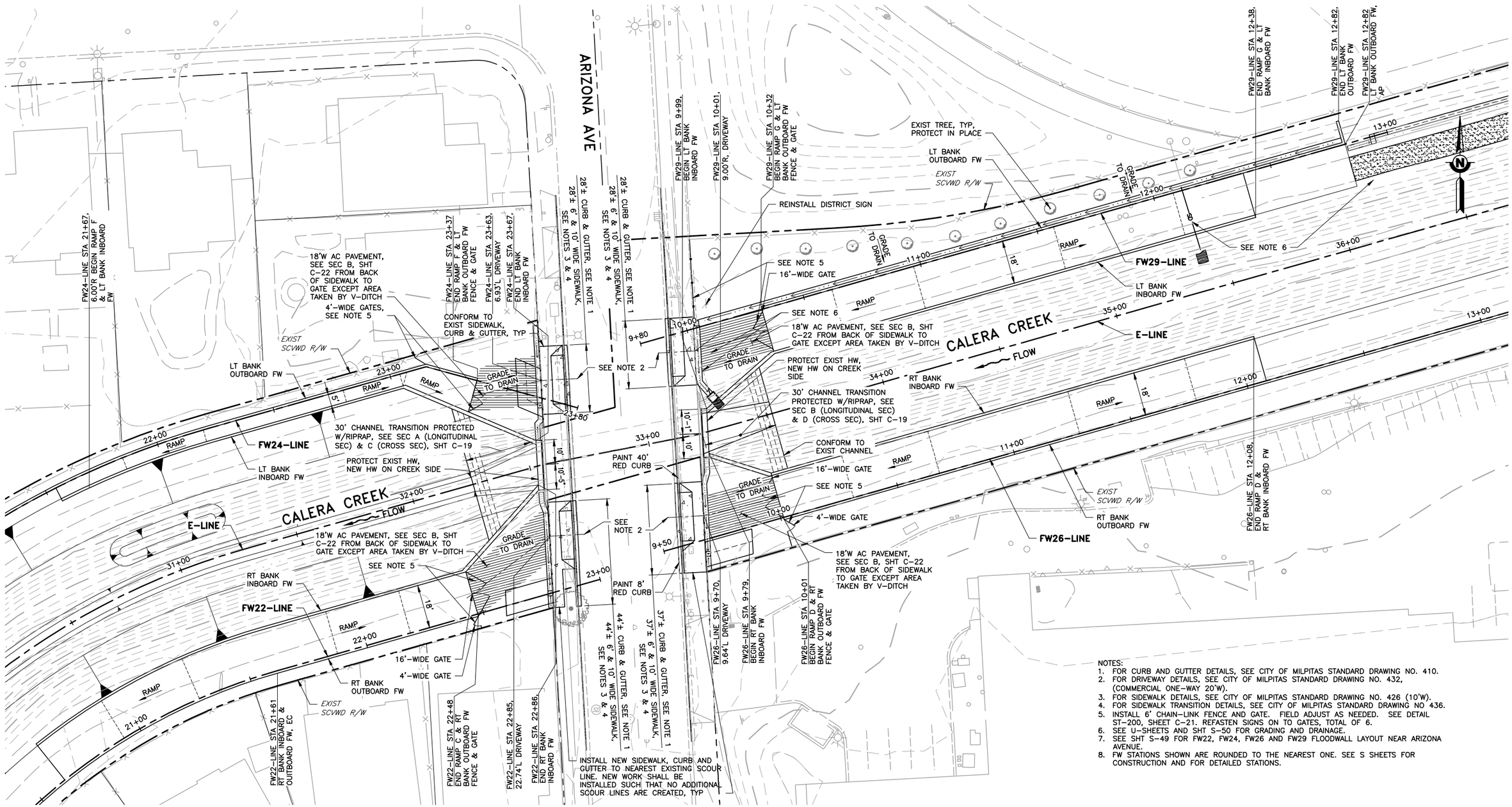

NOTES:
1. FOR CURB AND GUTTER DETAILS, SEE CITY OF MILPITAS STANDARD DRAWING NO. 410.
2. FOR DRIVEWAY DETAILS, SEE CITY OF MILPITAS STANDARD DRAWING NO. 432, (COMMERCIAL ONE-WAY 20'W).
3. FOR SIDEWALK DETAILS, SEE CITY OF MILPITAS STANDARD DRAWING NO. 426 (10'W).
4. FOR SIDEWALK TRANSITION DETAILS, SEE CITY OF MILPITAS STANDARD DRAWING NO 436.
5. INSTALL 6' CHAIN-LINK FENCE AND GATE. FIELD ADJUST AS NEEDED. SEE DETAIL ST-200, SHEET C-21. REFASTEN SIGNS ON TO GATES, TOTAL OF 6.
6. SEE U-SHEETS AND SHT S-50 FOR GRADING AND DRAINAGE.
7. SEE SHT S-49 FOR FW22, FW24, FW26 AND FW29 FLOODWALL LAYOUT NEAR ARIZONA AVENUE.
8. FW STATIONS SHOWN ARE ROUNDED TO THE NEAREST ONE. SEE S SHEETS FOR CONSTRUCTION AND FOR DETAILED STATIONS.

DETAIL 1 C-03 ARIZONA AVENUE CROSSING
SCALE: 1" = 20'

C-04
C-07
C-08

REV	DESCRIPTION	DATE	APPR	REFERENCE INFORMATION AND NOTES

Attachment 4
Page 53 of 144

DATE	ENGINEERING CERTIFICATION	SANTA CLARA VALLEY WATER DISTRICT	PROJECT NAME AND SHEET DESCRIPTION:	SCALE	PROJECT NUMBER
12/30/2020	REGISTERED PROFESSIONAL ENGINEER YOUHAN LEE No. C42456 CIVIL STATE OF CALIFORNIA	Valley Water	LOWER CALERA CREEK FLOOD PROTECTION PROJECT	AS SHOWN	40174005
DESIGN Y. LEE	12.30.2020		ARIZONA AVENUE CROSSING DETAIL	VERIFY SCALES 0 1" IF NOT ONE INCH ON ORIGINAL DRAWING THEN ADJUST SCALES ACCORDINGLY	SHEET CODE: C-18
DRAWN R. STILL	PROJECT ENGINEER DATE				SHEET NUMBER: 53 OF 144
CHECKED Y. LEE					

Attachment 4
Page 53 of 144

DOCUMENT NUMBER: CAE_CY-C-4018-65958

USERNAME: Jennford 12/24/2020 11:06 AM
FILENAME: K:\Active Projects\MP-40174005\Lower Calera Creek Project\SHEETS\C-18.dwg

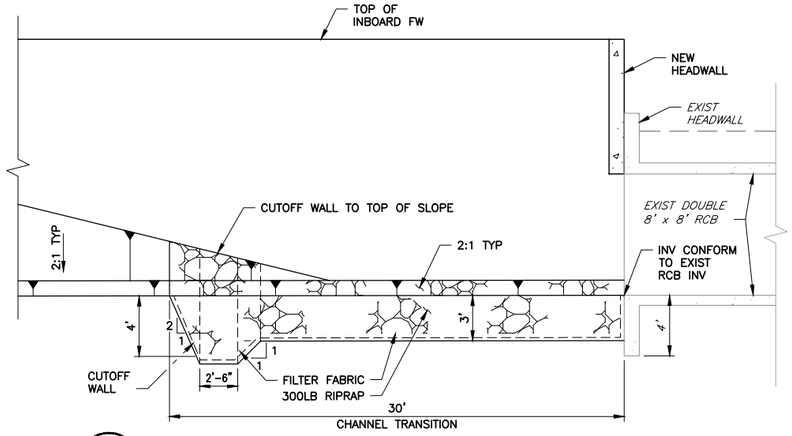

SECTION A (C-17) / C-18 — CHANNEL TRANSITION PROTECTED WITH RIPRAP
E-LINE STA 19+20 TO 19+50 (MIRRORED) AND 32+25 TO 32+55
SCALE: 1" = 5'

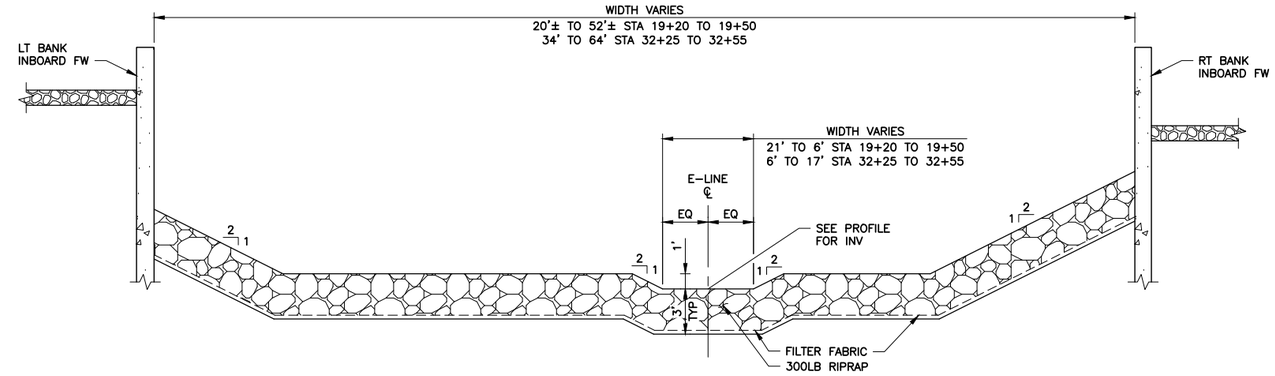

SECTION C (C-17) / C-18 — CHANNEL TRANSITION PROTECTED WITH RIPRAP
E-LINE STA 19+20 TO 19+50 AND 32+25 TO 32+55
SCALE: 1" = 5'

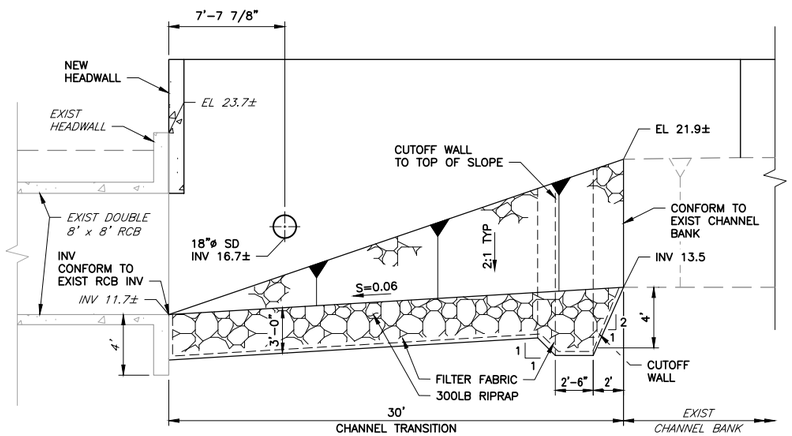

SECTION B (C-18) — CHANNEL TRANSITION PROTECTED WITH RIPRAP
E-LINE STA 33+22 TO 33+52
SCALE: 1" = 5'

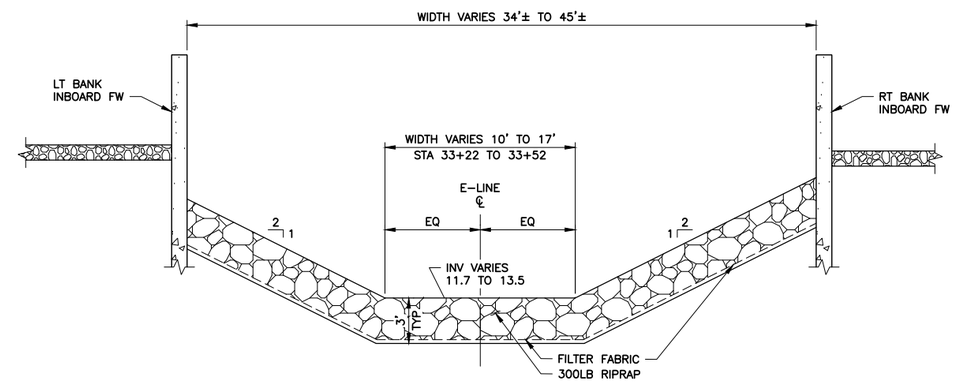

SECTION D (C-18) — CHANNEL TRANSITION PROTECTED WITH RIPRAP
E-LINE STA 33+22 TO 33+52
SCALE: 1" = 5'

REV	DESCRIPTION	DATE	APPR	REFERENCE INFORMATION AND NOTES

DATE 12/30/2020
DESIGN Y. LEE
DRAWN R. STILL
CHECKED Y. LEE

ENGINEERING CERTIFICATION
REGISTERED PROFESSIONAL ENGINEER YOUHAN LEE No. C42456 CIVIL STATE OF CALIFORNIA
PROJECT ENGINEER 12.30.2020 DATE

SANTA CLARA VALLEY WATER DISTRICT
Valley Water

PROJECT NAME AND SHEET DESCRIPTION:
LOWER CALERA CREEK FLOOD PROTECTION PROJECT
SECTIONS

SCALE: AS SHOWN
VERIFY SCALES: 0 1" — IF NOT ONE INCH ON ORIGINAL DRAWING IF NOT ONE INCH ON THIS SHEET, ADJUST SCALES ACCORDINGLY
PROJECT NUMBER: 40174005
SHEET CODE: C-19
SHEET NUMBER: 54 OF 144

USERNAME: Jennford 12/23/2020 3:51 PM
FILENAME: K:\Active Projects\MP-40174005\Lower Calera Creek Project\SHEETS\C-19.dwg
DOCUMENT NUMBER: CAE_CY-C-4018-65959

Attachment 4
Page 54 of 144

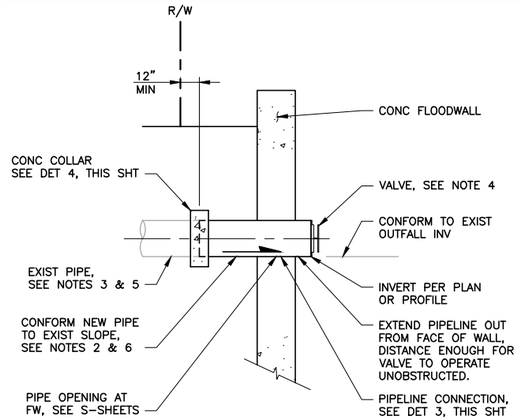

DETAIL 1 (U-01) OUTFALL MODIFICATION AT FLOODWALL

SCALE: NTS

C-17, C-23
U-02, U-03

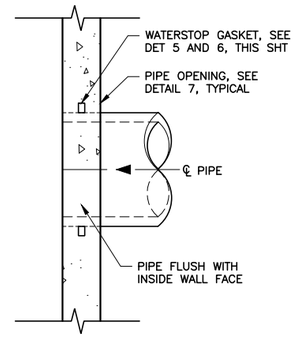

DETAIL 3 (U-02) PIPELINE CONNECTION

SCALE: 1/2" = 1'-0"

U-03

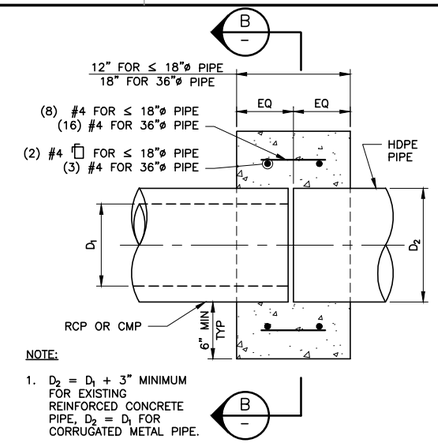

NOTE:

1. $D_2 = D_1 + 3"$ MINIMUM FOR EXISTING REINFORCED CONCRETE PIPE, $D_2 = D_1$ FOR CORRUGATED METAL PIPE.

DETAIL 4 (–) CONCRETE COLLAR

SCALE: NTS

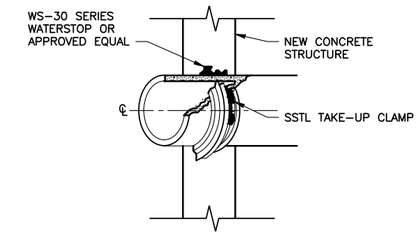

DETAIL 5 (–) NEW STRUCTURE

SCALE: NOT TO SCALE

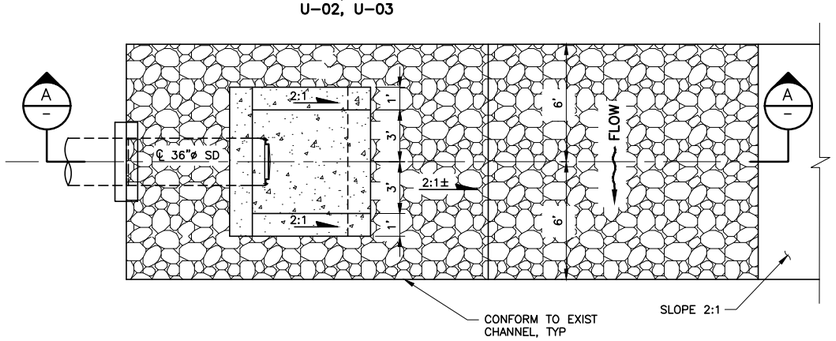

DETAIL 2 (U-04) 36"ø SD OUTFALL AT LEVEE SLOPE

SCALE: NTS

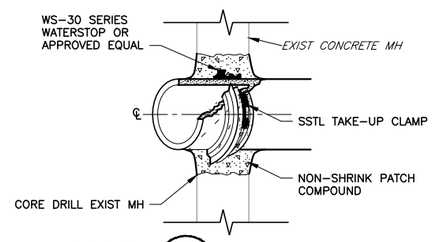

DETAIL 6 (–) EXIST MH

SCALE: NOT TO SCALE

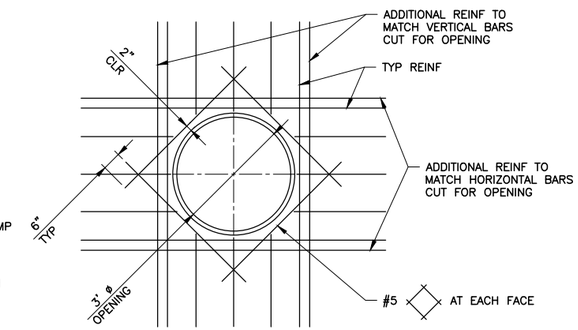

DETAIL 7 (–) PIPE OPENING

SCALE: 1/2" = 1'-0"

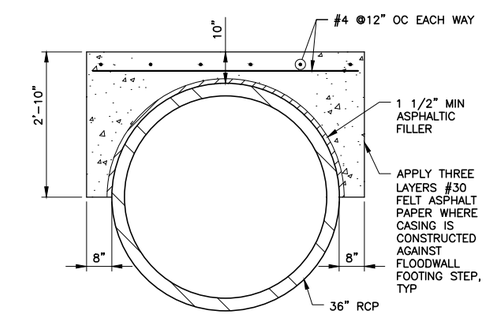

DETAIL 8 (U-04) CONC TOP CASING

SCALE: NTS

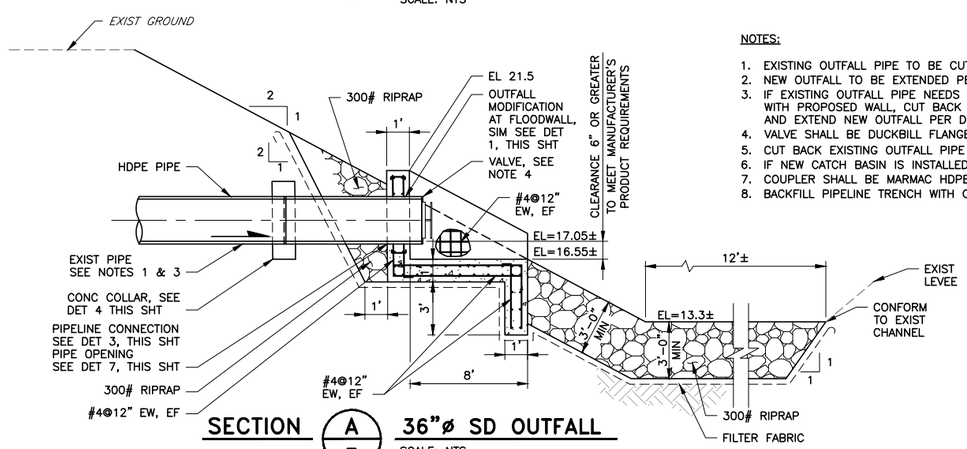

SECTION A (–) 36"ø SD OUTFALL

SCALE: NTS

NOTES:

1. EXISTING OUTFALL PIPE TO BE CUT BACK 6' MINIMUM BEHIND PROPOSED SLOPE.
2. NEW OUTFALL TO BE EXTENDED PER DETAILS, AND INSTALL CHECK VALVE.
3. IF EXISTING OUTFALL PIPE NEEDS TO BE EXTENDED TO PROPOSED SLOPE OR FLUSH WITH PROPOSED WALL, CUT BACK AND DISPOSE OF ANY DAMAGED PORTION OF PIPE AND EXTEND NEW OUTFALL PER DETAIL.
4. VALVE SHALL BE DUCKBILL FLANGE STYLE CHECK VALVE, OR APPROVED EQUAL.
5. CUT BACK EXISTING OUTFALL PIPE 12" FROM RIGHT-OF-WAY.
6. IF NEW CATCH BASIN IS INSTALLED UPSTREAM, EXTEND NEW PIPE TO NEW CATCH BASIN.
7. COUPLER SHALL BE MARMAC HDPE TO CMP CONNECTION, OR APPROVED EQUAL.
8. BACKFILL PIPELINE TRENCH WITH CHANNEL EMBANKMENT FILL UNLESS OTHERWISE NOTED.

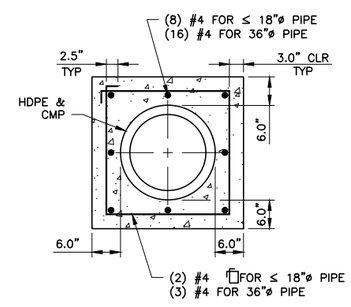

SECTION B (–) CONCRETE COLLAR

SCALE: NTS

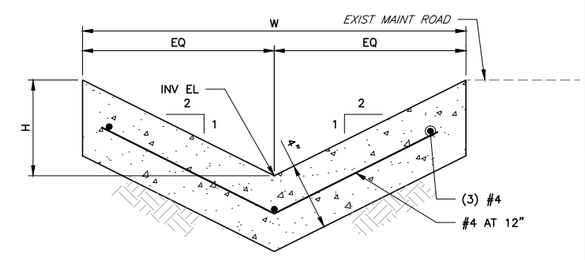

SECTION C (C-24) WxH V-DITCH

SCALE: NTS

U-01 TO U-04
C-26

REV	DESCRIPTION	DATE	APPR

REFERENCE INFORMATION AND NOTES

DATE 12/30/2020
DESIGN Y. LEE
DRAWN A. ABDEL
CHECKED Y. LEE

ENGINEERING CERTIFICATION
REGISTERED PROFESSIONAL ENGINEER YOUHAN LEE No. C42456 CIVIL STATE OF CALIFORNIA
PROJECT ENGINEER 12.30.2020 DATE

SANTA CLARA VALLEY WATER DISTRICT
Valley Water

PROJECT NAME AND SHEET DESCRIPTION:

LOWER CALERA CREEK FLOOD PROTECTION PROJECT

STORM DRAIN MODIFICATION DETAILS AND SECTIONS

SCALE: AS SHOWN
VERIFY SCALES: 0 1" — IF NOT ONE INCH ON ORIGINAL DRAWING IF NOT ONE INCH ON THIS SHEET, ADJUST SCALES ACCORDINGLY

PROJECT NUMBER: 40174005
SHEET CODE: C-20
SHEET NUMBER: 55 OF 144

USERNAME: Jennford 12/24/2020 11:42 AM
FILENAME: K:\Active Projects\MP-40174005\Lower Calera Creek Project\SHEETS\C-20.dwg
DOCUMENT NUMBER: CAE_CY-C-4018-65960

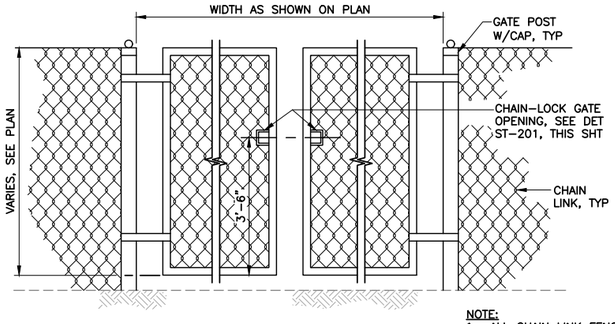

DOUBLE SWING DOUBLE DRIVE GATE

NOTE:
1. ALL CHAIN LINK FENCE AND GATES SHALL BE BLACK VINYL COATED.

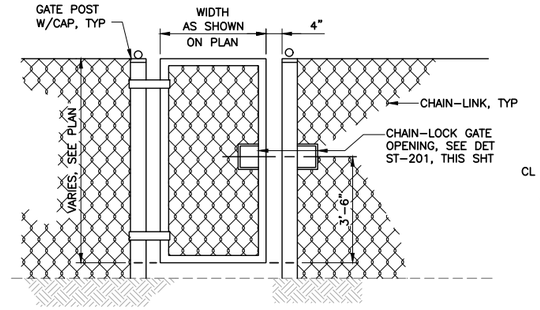

SINGLE SWING GATE

ST-200 TYP — CHAIN LINK GATES
SCALE: NTS

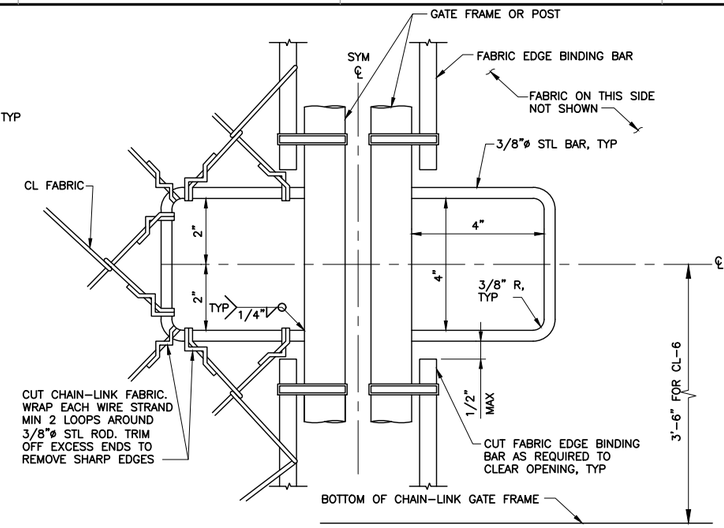

ST-201 TYP — CHAIN-LOCK GATE OPENING
SCALE: NTS

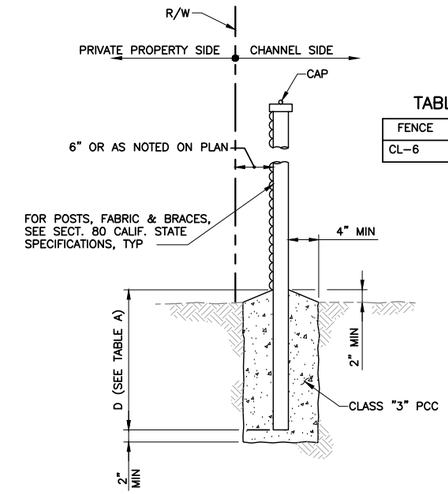

TABLE A

FENCE	D
CL-6	2'-0"

DETAIL 4 / C-17 — FENCE POST IN GROUND
SCALE: NTS
C-18

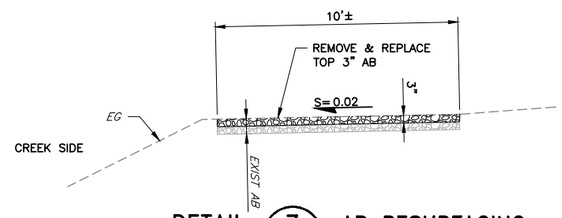

DETAIL 7 / C-04 — AB RESURFACING
SCALE: NTS
C-08

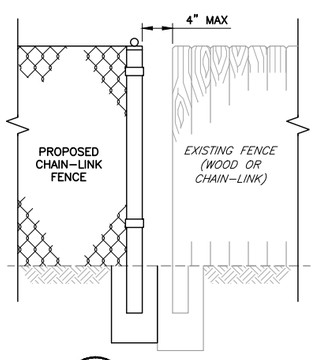

DETAIL 5 / C-17 — CONNECTION TO EXISTING FENCING
SCALE: NTS
C-18

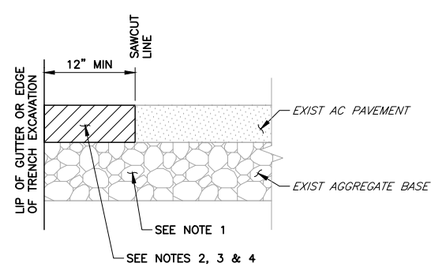

NOTES:
1. LEVEL AND COMPACT EXISTING AGGREGATE BASE TO 95% RELATIVE COMPACTION.
2. APPLY TACK COAT TO CUT AND GRIND EDGE OF EXISTING PAVEMENT.
3. TYPE "B" ASPHALT CONCRETE PER PROJECT SPECIFICATIONS. MATCH EXISTING PAVEMENT SECTION.
4. FOR CITY PAVEMENT RESTORATION DETAILS, SEE CITY OF MILPITAS STANDARD DRAWING NO.222

DETAIL 6 / C-18 — PAVEMENT CONFORM / RESTORATION
SCALE: NTS

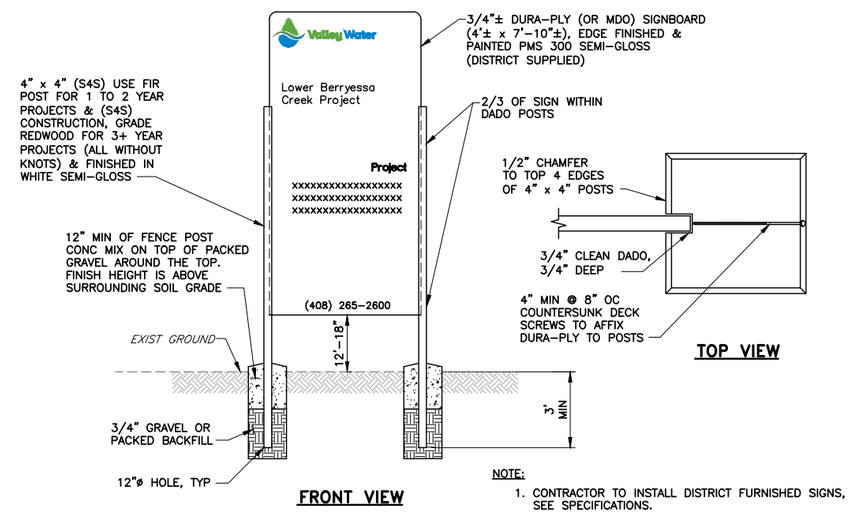

NOTE:
1. CONTRACTOR TO INSTALL DISTRICT FURNISHED SIGNS, SEE SPECIFICATIONS.

DETAIL 8 / – — PROJECT SIGN
SCALE: NTS

REV	DESCRIPTION	DATE	APPR

REFERENCE INFORMATION AND NOTES
1. CHAIN & LOCK SHALL BE FURNISHED AND INSTALLED BY SCVWD.
2. ALL CHAIN-LINK FENCE AND GATES SHALL BE BLACK VINYL COATED.
3. CHAIN-LINK FENCES SHALL BE PER STATE OF CALIFORNIA DEPARTMENT OF TRANSPORTATION REVISED STANDARD PLAN RSP A85.

DATE 12/30/2020
DESIGN Y. LEE
DRAWN A. ABDEL
CHECKED Y. LEE

ENGINEERING CERTIFICATION
REGISTERED PROFESSIONAL ENGINEER YOUHAN LEE No. C42456 CIVIL STATE OF CALIFORNIA
PROJECT ENGINEER — DATE 12.30.2020

SANTA CLARA VALLEY WATER DISTRICT
Valley Water

PROJECT NAME AND SHEET DESCRIPTION:
LOWER CALERA CREEK FLOOD PROTECTION PROJECT
DETAILS

SCALE: AS SHOWN
VERIFY SCALES: 0 — 1" IF NOT ONE INCH ON ORIGINAL DRAWING IF NOT ONE INCH ON THIS SHEET, ADJUST SCALES ACCORDINGLY
PROJECT NUMBER: 40174005
SHEET CODE: C-21
SHEET NUMBER: 56 OF 144

DOCUMENT NUMBER: CAE_CY-C-4018-65961
USERNAME: Jennford 12/23/2020 3:51 PM
FILENAME: K:\Active Projects\MP-40174005\Lower Calera Creek Project\SHEETS\C-21.dwg

Attachment 4
Page 56 of 144

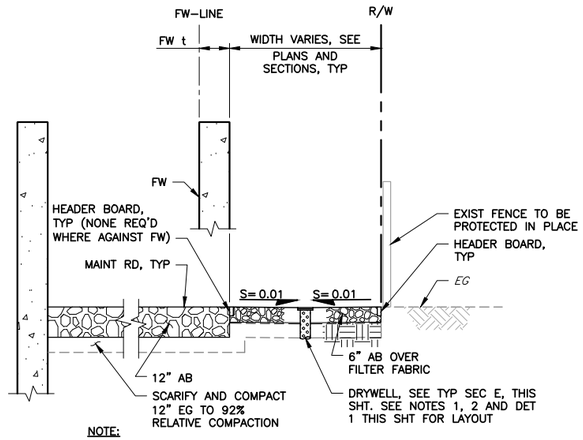

NOTE:

1. AT FW22 AND FW24, EACH APPROX 1330 FT, DIVIDE LENGTH INTO 16 EQ SECTIONS, SEE DET 1, SIMILAR TO LAY DW. TOTAL 8.
2. AT FW26, APPROX 480 FT, DIVIDE LENGTH INTO 6 EQ SECTIONS, SEE DET 1 TO LAY DW. TOTAL 3.

ALONG OUTBOARD FLOODWALL

TYPICAL SECTION A C–13 MAINTENANCE ACCESS WITH DRYWELL (DW)
SCALE: NTS
C–14
C–15
C–16

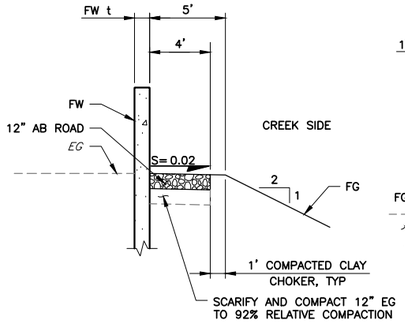

ALONG FLOODWALL 1

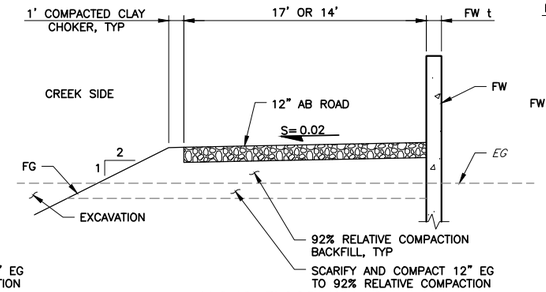

ALONG FLOODWALL 2

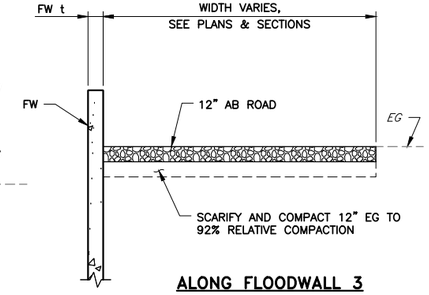

ALONG FLOODWALL 3

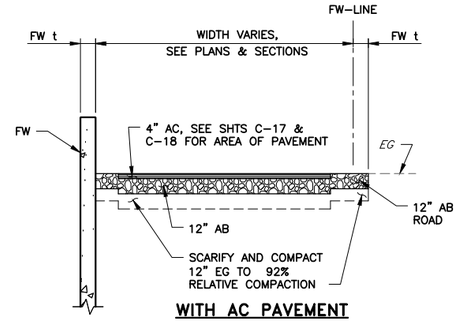

WITH AC PAVEMENT

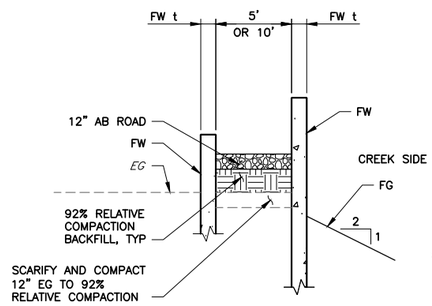

BETWEEN WALLS 1

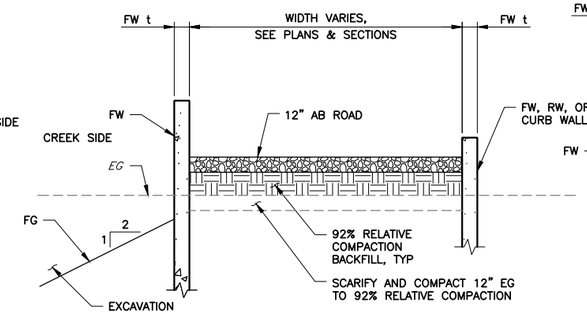

BETWEEN WALLS 2

TYPICAL SECTION B C–01 MAINTENANCE ROAD
SCALE: 1" = 5'
C–14, C–15, C–18, C–23, U–01

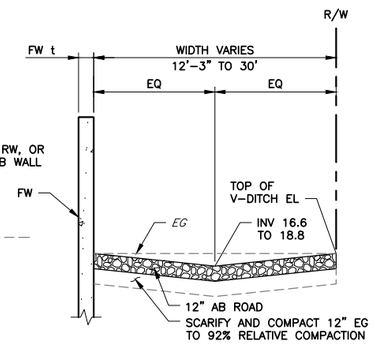

V–DITCH

NOTE:

1. SEE SHT U–01 FOR TOP OF V–DITCH EL AND INV EL

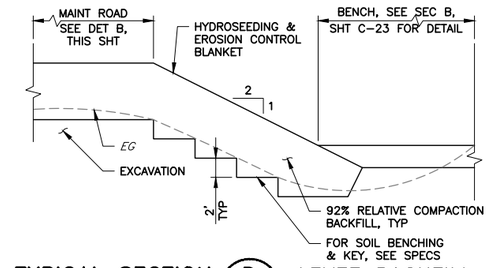

TYPICAL SECTION D C–13 LEVEE BACKFILL
SCALE: NTS
C–14, C–15

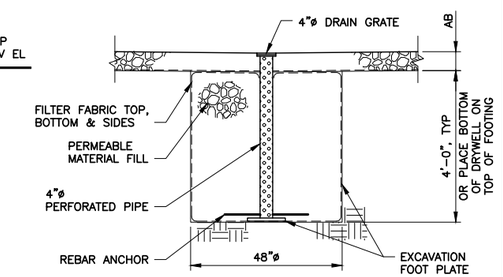

TYPICAL SECTION E – DRYWELL
SCALE: 1/2" = 1'–0"

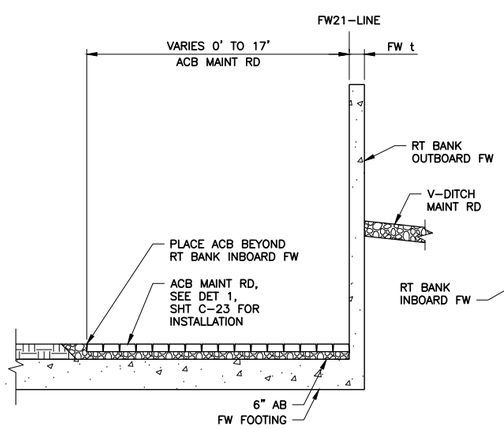

FW21–LINE STA 10+31 TO 11+59

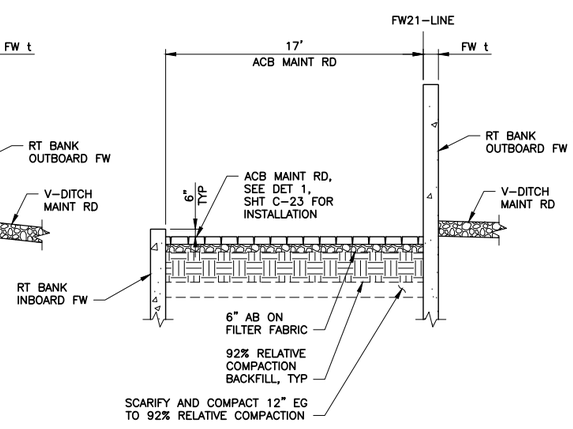

FW21–LINE STA 11+59 TO 13+49

TYPICAL SECTION C C–12 ACB MAINTENANCE ROAD
SCALE: 1" = 5'

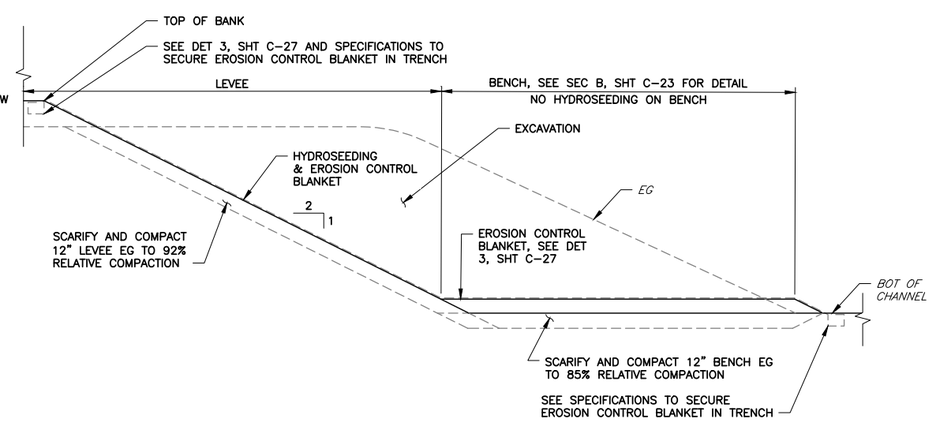

TYPICAL SECTION F C–13 LEVEE EXCAVATION
SCALE: NTS
C–14, C–15

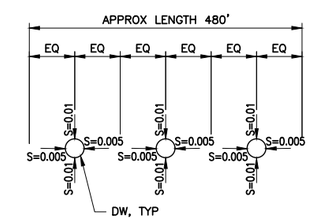

DETAIL 1 – DW SCHEMATIC LAYOUT
SCALE: NTS

REV	DESCRIPTION	DATE	APPR	REFERENCE INFORMATION AND NOTES

Attachment 4
Page 57 of 144

DATE 12/30/2020
DESIGN Y. LEE
DRAWN A. ABDEL
CHECKED Y. LEE

ENGINEERING CERTIFICATION
REGISTERED PROFESSIONAL ENGINEER YOUHAN LEE No. C42456 CIVIL STATE OF CALIFORNIA
12.30.2020
PROJECT ENGINEER DATE

SANTA CLARA VALLEY WATER DISTRICT
Valley Water

PROJECT NAME AND SHEET DESCRIPTION:
LOWER CALERA CREEK
FLOOD PROTECTION PROJECT
TYPICAL SECTIONS

SCALE AS SHOWN
VERIFY SCALES 0 1"
IF NOT ONE INCH ON ORIGINAL DRAWING THIS SHEET, ADJUST SCALES ACCORDINGLY

PROJECT NUMBER 40174005
SHEET CODE: C–22
SHEET NUMBER: 57 OF 144

Attachment 4
Page 57 of 144

USERNAME: Jennford 12/23/2020 3:51 PM
FILENAME: K:\Active Projects\MP-40174005\Lower Calera Creek Project\SHEETS\C-22.dwg
DOCUMENT NUMBER: CAE_CY-C-4018-65962

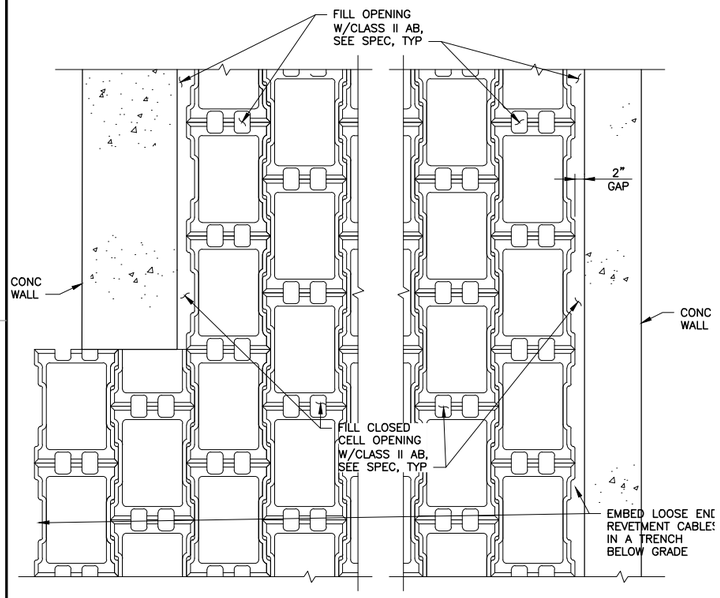

CLOSED CELL BLOCKS

DETAIL 1 / C-22 TYPICAL ACB INSTALLATION
SCALE: 3/4" = 1'-0"

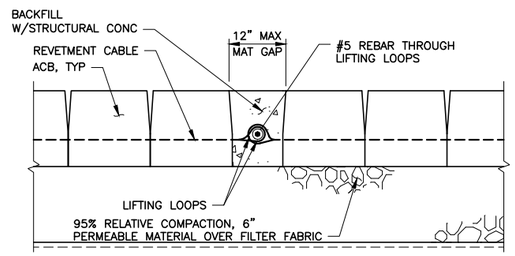

SECTION A / – ACB MAT TO MAT CONCRETE CONNECTION
SCALE: NTS

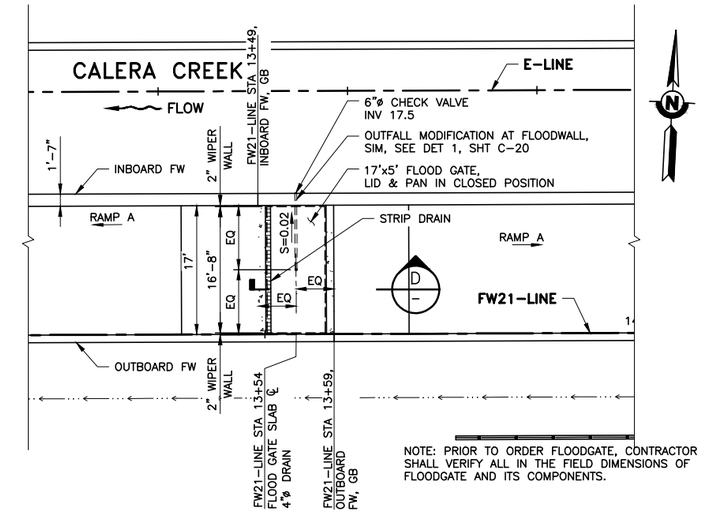

DETAIL 3 / C-17 FLOOD GATE
SCALE: 1" = 10'

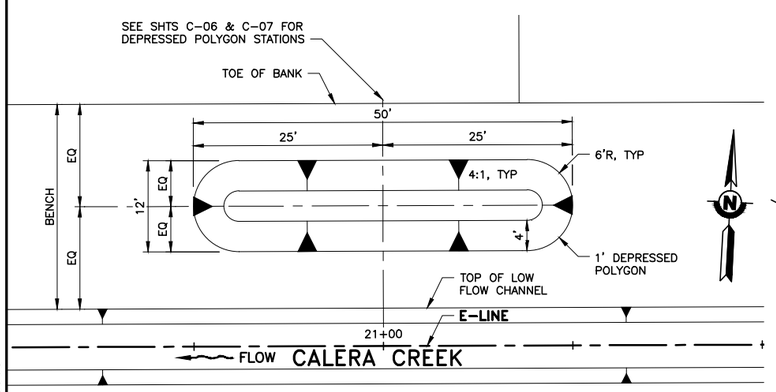

DETAIL 2 / C-06, C-07 DEPRESSED POLYGON
SCALE: 1" = 10'

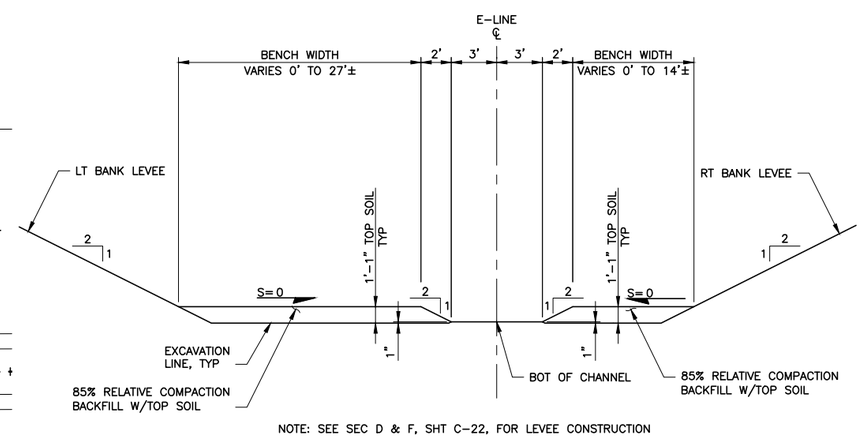

NOTE: SEE SEC D & F, SHT C-22, FOR LEVEE CONSTRUCTION

TYPICAL SECTION B / C-13 TOPSOIL BACKFILL
SCALE: 1" = 5'
C-14, C-15, C-22

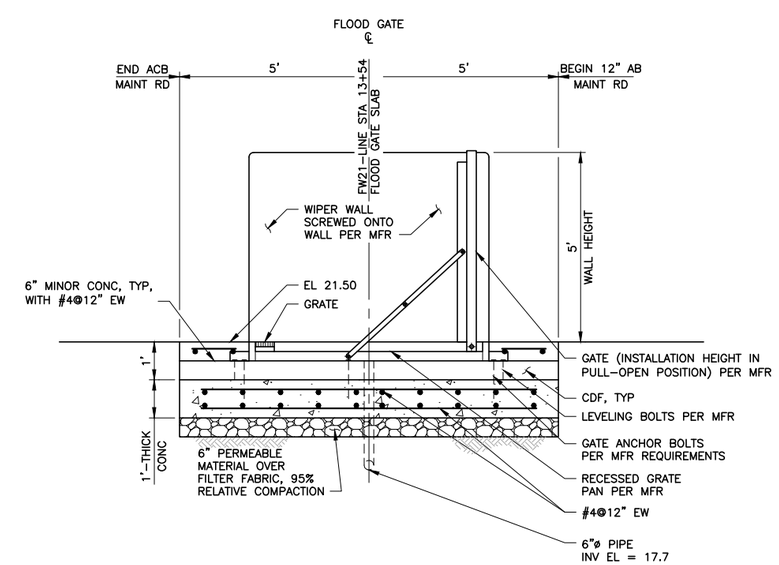

SECTION D / – FLOOD GATE SLAB
SCALE: 1" = 2'

REV	DESCRIPTION	DATE	APPR

REFERENCE INFORMATION AND NOTES
1. FOR HANDICAP RAMP DETAILS, SEE CITY OF MILPITAS STANDARD DRAWING NO. 419.

DATE	ENGINEERING CERTIFICATION
12/30/2020	REGISTERED PROFESSIONAL ENGINEER YOUHAN LEE No. C42456 CIVIL STATE OF CALIFORNIA
DESIGN Y. LEE	
DRAWN J. FORD	
CHECKED Y. LEE	12.30.2020 PROJECT ENGINEER DATE

SANTA CLARA VALLEY WATER DISTRICT
Valley Water

PROJECT NAME AND SHEET DESCRIPTION:
LOWER CALERA CREEK FLOOD PROTECTION PROJECT
TYPICAL SECTIONS

SCALE	PROJECT NUMBER
AS SHOWN	40174005
VERIFY SCALES 0 1" BAR IS ONE INCH ON ORIGINAL DRAWING IF NOT ONE INCH ON THIS SHEET, ADJUST SCALES ACCORDINGLY	SHEET CODE: C-23
	SHEET NUMBER: 58 OF 144

USERNAME: Jennford 12/24/2020 11:53 AM
FILENAME: K:\Active Projects\MP-40174005\Lower Calera Creek Project\SHEETS\C-23.dwg
DOCUMENT NUMBER: CAE_CY-C-4018-65963

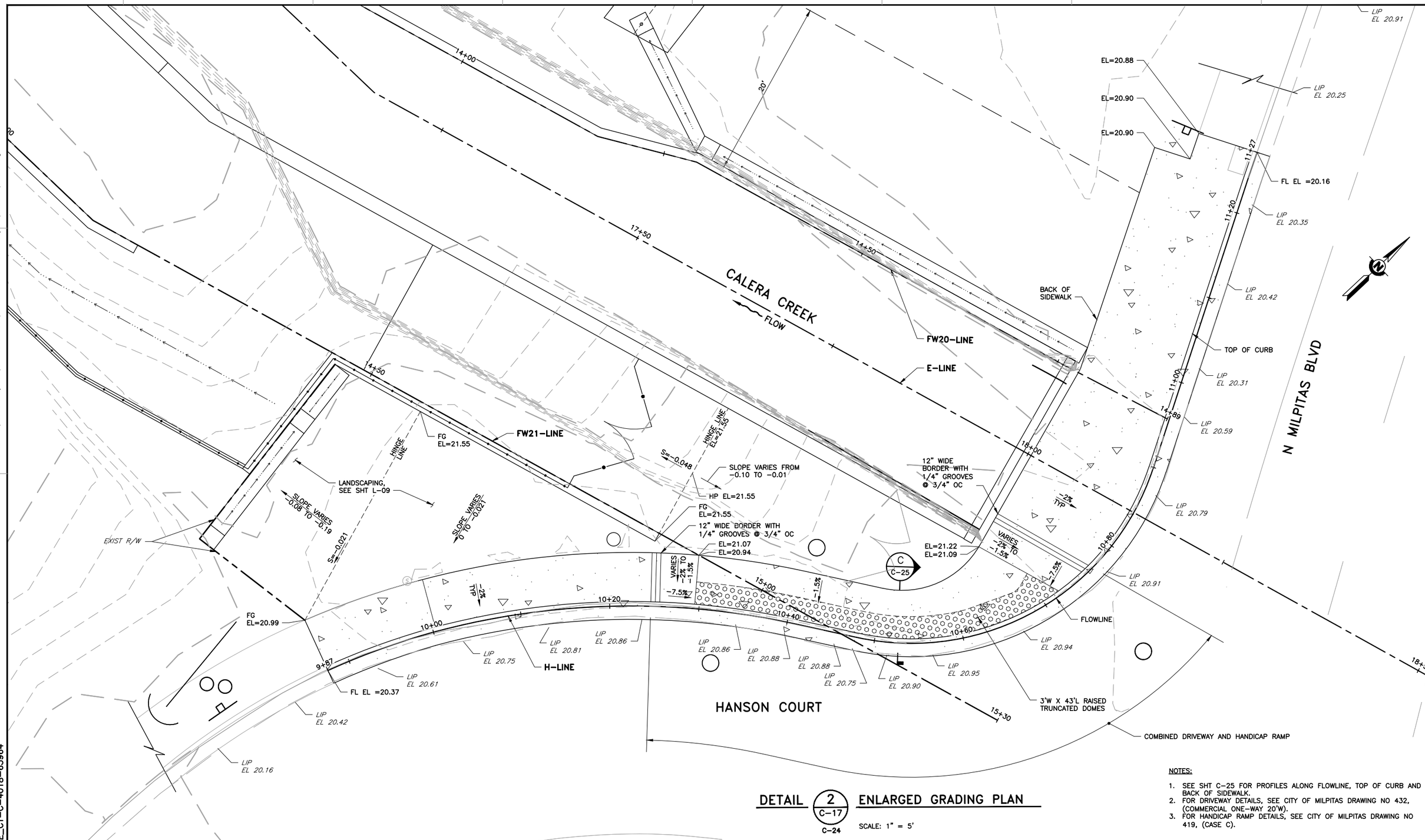

DETAIL 2 (C-17) ENLARGED GRADING PLAN

C-24

SCALE: 1" = 5'

NOTES:

1. SEE SHT C-25 FOR PROFILES ALONG FLOWLINE, TOP OF CURB AND BACK OF SIDEWALK.
2. FOR DRIVEWAY DETAILS, SEE CITY OF MILPITAS DRAWING NO 432, (COMMERCIAL ONE-WAY 20'W).
3. FOR HANDICAP RAMP DETAILS, SEE CITY OF MILPITAS DRAWING NO 419, (CASE C).

REV	DESCRIPTION	DATE	APPR	REFERENCE INFORMATION AND NOTES
				.

DATE 12/30/2020
DESIGN Y. LEE
DRAWN P. KEY
CHECKED Y. LEE

ENGINEERING CERTIFICATION
REGISTERED PROFESSIONAL ENGINEER YOUHAN LEE No. C42456 CIVIL STATE OF CALIFORNIA
PROJECT ENGINEER 12.30.2020 DATE

SANTA CLARA VALLEY WATER DISTRICT
Valley Water

PROJECT NAME AND SHEET DESCRIPTION:
LOWER CALERA CREEK FLOOD PROTECTION PROJECT
DRIVEWAY, HANDICAP RAMP AND GRADING

SCALE: AS SHOWN
VERIFY SCALES: 0 1" — IF NOT ONE INCH ON ORIGINAL DRAWING IF NOT ONE INCH ON THIS SHEET, ADJUST SCALES ACCORDINGLY

PROJECT NUMBER: 40174005
SHEET CODE: C-24
SHEET NUMBER: 59 OF 144

DOCUMENT NUMBER: CAE_CY-C-4018-65964

USERNAME: Jennford 12/23/2020 3:52 PM
FILENAME: K:\Active Projects\MP-40174005\Lower Calera Creek Project\SHEETS\C-24.dwg

Attachment 4
Page 59 of 144

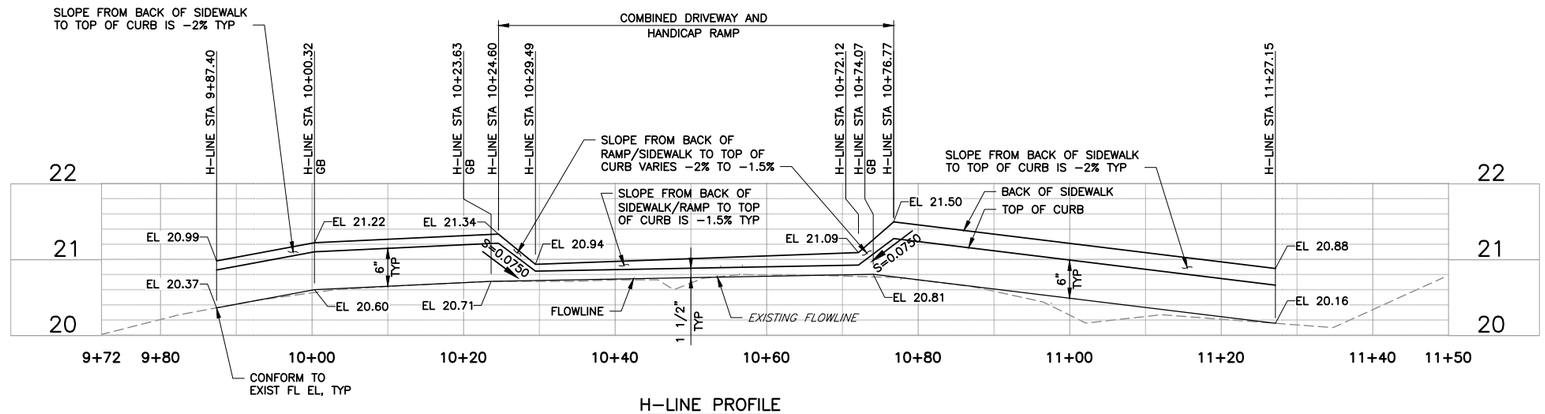

H-LINE PROFILE

HORIZ: 1" = 10'
VERT: 1" = 1'

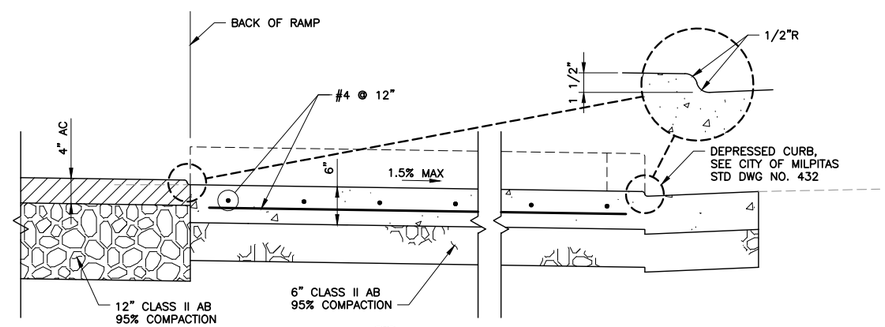

SECTION C / C-24 HANDICAP RAMP SECTION

SCALE: 1" = 1'-0"

USERNAME: Jennford 12/23/2020 3:52 PM
FILENAME: K:\Active Projects\MP-40174005\Lower Calera Creek Project\SHEETS\C-25.dwg

DOCUMENT NUMBER: CAE_CY-C-4018-65965

REV	DESCRIPTION	DATE	APPR	REFERENCE INFORMATION AND NOTES

Attachment 4
Page 60 of 144

DATE	ENGINEERING CERTIFICATION	SANTA CLARA VALLEY WATER DISTRICT	PROJECT NAME AND SHEET DESCRIPTION:	SCALE	PROJECT NUMBER
12/30/2020	REGISTERED PROFESSIONAL ENGINEER YOUHAN LEE No. C42456 CIVIL STATE OF CALIFORNIA	Valley Water	LOWER CALERA CREEK FLOOD PROTECTION PROJECT	AS SHOWN	40174005
DESIGN Y. LEE				VERIFY SCALES 0 1"	SHEET CODE:
DRAWN J. FORD			DRIVEWAY AND HANDICAP RAMP PROFILE AND SECTION	IF NOT 1" INCH ON ORIGINAL DRAWING THIS SHEET, ADJUST SCALES ACCORDINGLY	C-25
CHECKED Y. LEE	PROJECT ENGINEER 12.30.2020 DATE				SHEET NUMBER: 60 OF 144

Attachment 4
Page 60 of 144

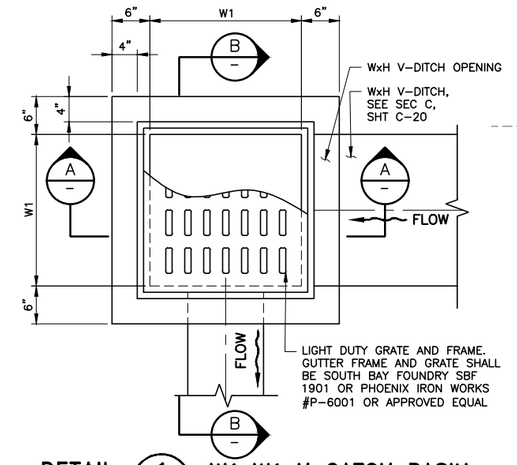

DETAIL 1 / U-01 — W1xW1xH CATCH BASIN

SCALE: NTS

U-02 TO U-04

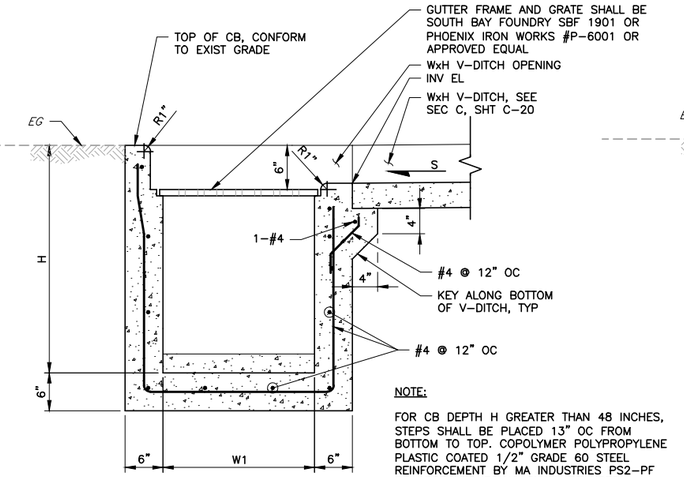

NOTE:

FOR CB DEPTH H GREATER THAN 48 INCHES, STEPS SHALL BE PLACED 13" OC FROM BOTTOM TO TOP. COPOLYMER POLYPROPYLENE PLASTIC COATED 1/2" GRADE 60 STEEL REINFORCEMENT BY MA INDUSTRIES PS2-PF OR APPROVED EQUAL SHALL BE USED.

SECTION A / – CATCH BASIN

SCALE: NTS

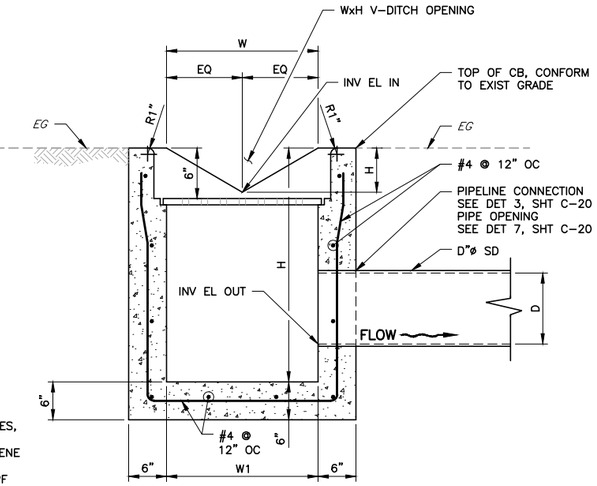

SECTION B / – CATCH BASIN

SCALE: NTS

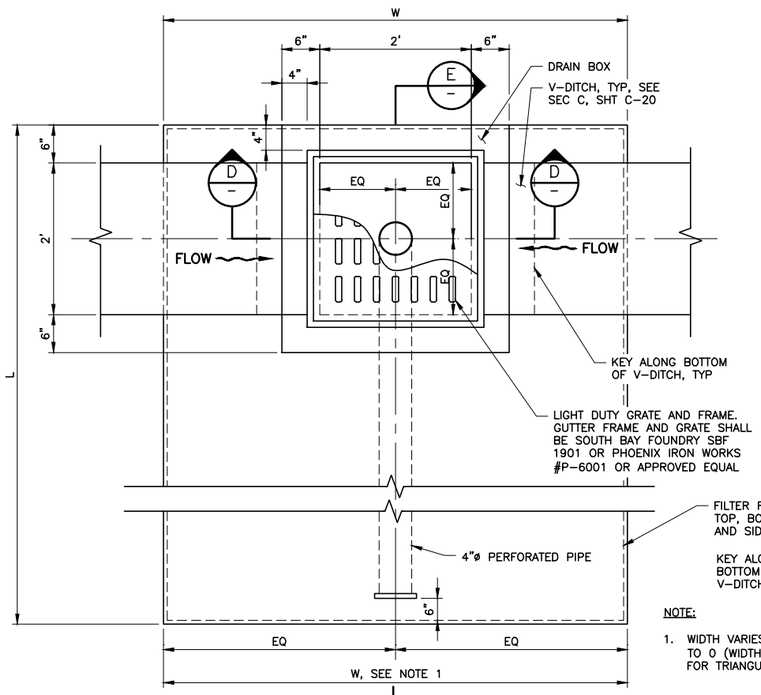

NOTE:

1. WIDTH VARIES FROM W (WIDTH AT DB END TO 0 (WIDTH AT END OF PERFORATED PIPE) FOR TRIANGULAR SHALLOW GRAVEL BASIN.

DETAIL 2 / U-02 / U-03 — LxW SHALLOW GRAVEL BASIN AND DRAIN BOX

SCALE: NTS

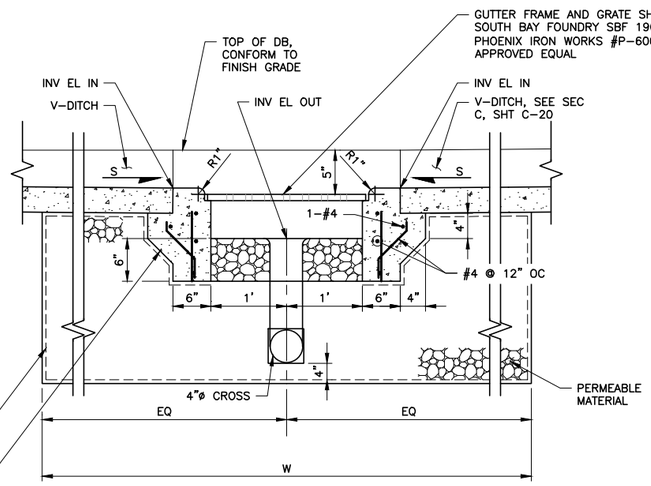

SECTION D / – SHALLOW GRAVEL BASIN AND DRAIN BOX

SCALE: NTS

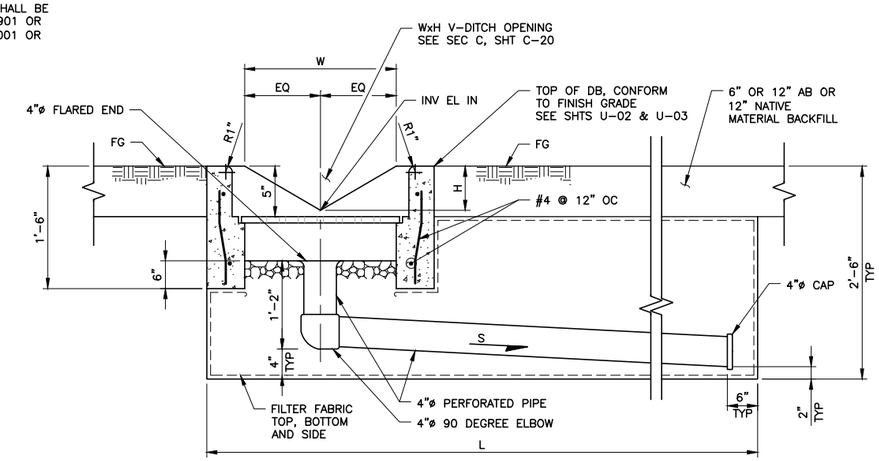

SECTION E / – SHALLOW GRAVEL BASIN AND DRAIN BOX

SCALE: NTS

REV	DESCRIPTION	DATE	APPR	REFERENCE INFORMATION AND NOTES

Attachment 4
Page 61 of 144

DATE	ENGINEERING CERTIFICATION	SANTA CLARA VALLEY WATER DISTRICT	PROJECT NAME AND SHEET DESCRIPTION:	SCALE	PROJECT NUMBER
12/30/2020	REGISTERED PROFESSIONAL ENGINEER TOUHAN LEE No. C42456 CIVIL STATE OF CALIFORNIA	Valley Water	LOWER CALERA CREEK FLOOD PROTECTION PROJECT	AS SHOWN	40174005
DESIGN Y. LEE	12.30.2020			VERIFY SCALES 0 1" IF NOT ONE INCH ON ORIGINAL DRAWING IF NOT ONE INCH ON THIS SHEET, ADJUST SCALES ACCORDINGLY	SHEET CODE: C-26
DRAWN P. KEY	PROJECT ENGINEER DATE		DETAILS		SHEET NUMBER: 61 OF 144
CHECKED Y. LEE					

Attachment 4
Page 61 of 144

DOCUMENT NUMBER: CAE_CY-C-4018-65966

USERNAME: Jennford 12/24/2020 12:01 PM
FILENAME: K:\Active Projects\MP-40174005\Lower Calera Creek Project\SHEETS\C-26.dwg

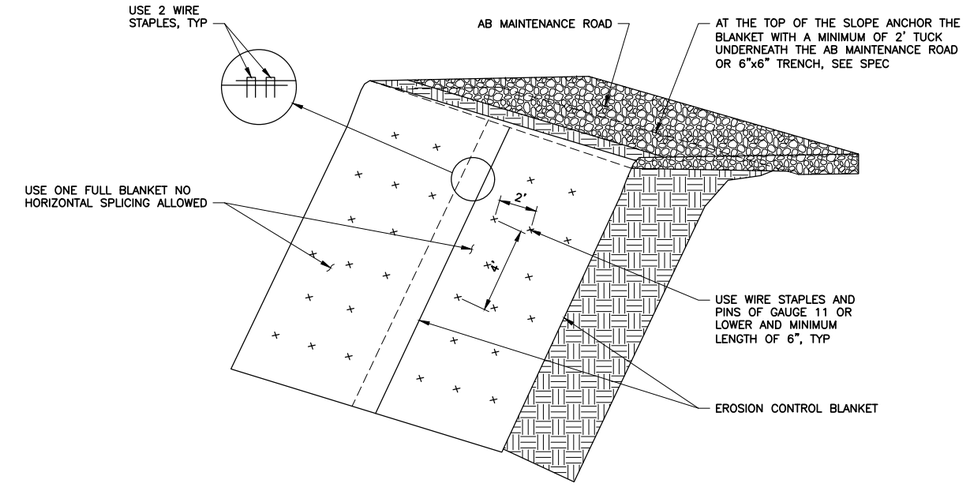

DETAIL 3 / C-22 INSTALLATION OF EROSION CONTROL BLANKET

SCALE: NTS

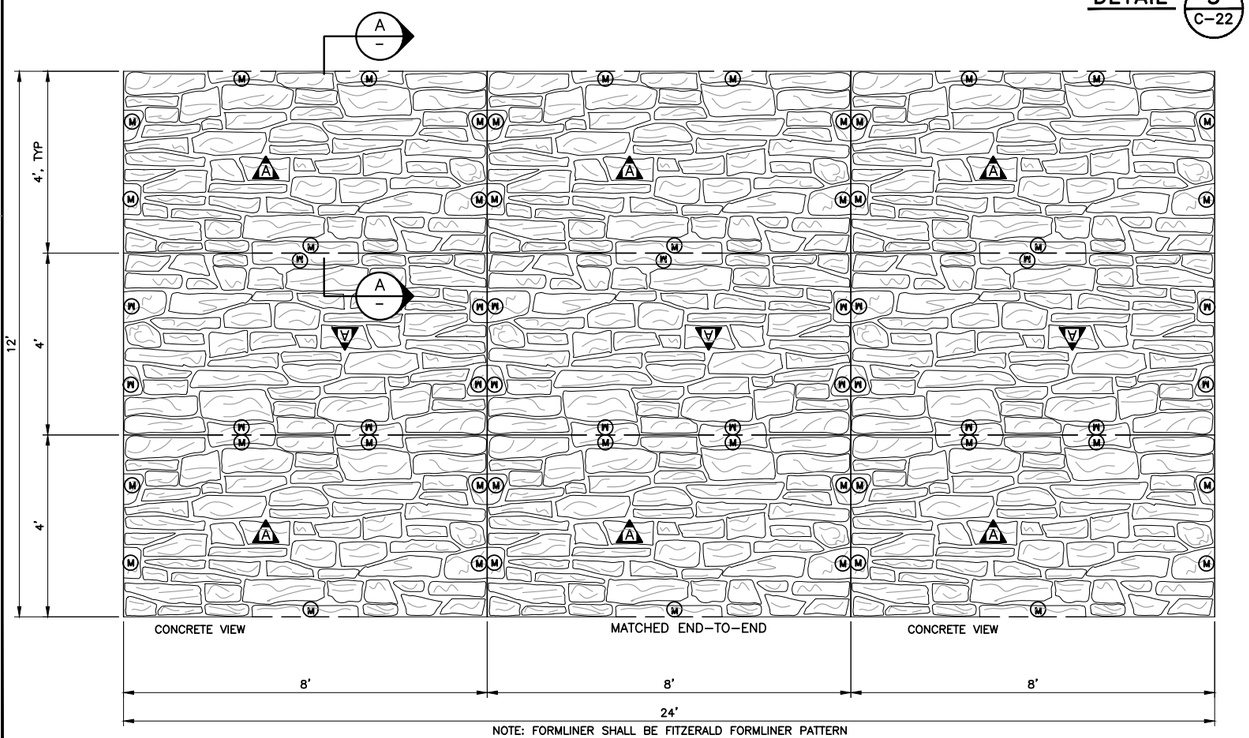

NOTE: FORMLINER SHALL BE FITZERALD FORMLINER PATTERN 17910, "ANTIETAM DRYSTACK" OR APPROVED EQUAL.

DETAIL 1 / – FORMLINER PATTERN

SCALE: NTS

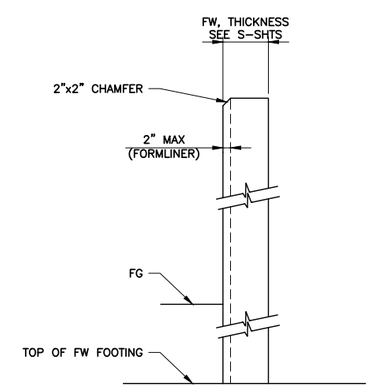

DETAIL 2 / – ARCHITECTURAL TREATMENT

SCALE: NTS

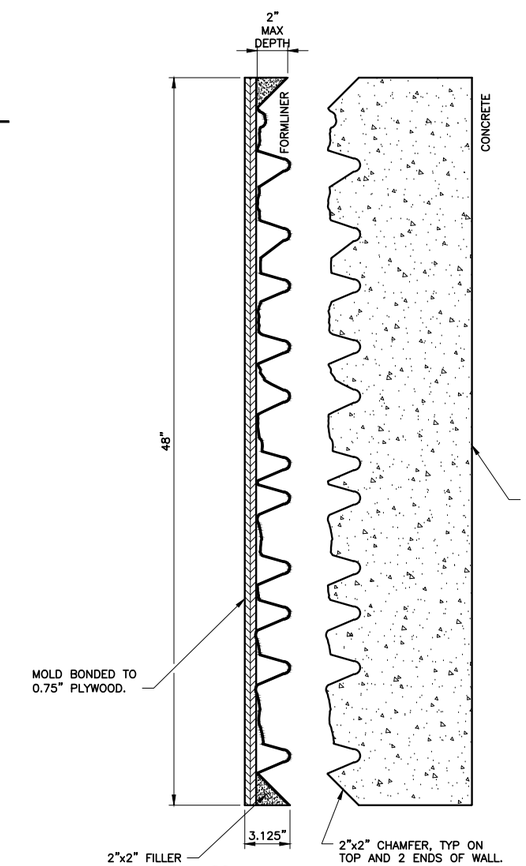

SECTION A / – FORM PROFILE

SCALE: NTS

REV	DESCRIPTION	DATE	APPR

REFERENCE INFORMATION AND NOTES

.

DATE	ENGINEERING CERTIFICATION
12/30/2020	REGISTERED PROFESSIONAL ENGINEER YOUHAN LEE No. C42456 CIVIL STATE OF CALIFORNIA
DESIGN Y. LEE	
DRAWN P. KEY	
CHECKED Y. LEE	PROJECT ENGINEER — DATE 12.30.2020

SANTA CLARA VALLEY WATER DISTRICT

Valley Water

PROJECT NAME AND SHEET DESCRIPTION:

LOWER CALERA CREEK FLOOD PROTECTION PROJECT

DETAILS

SCALE	PROJECT NUMBER
AS SHOWN	40174005
VERIFY SCALES 0 1" IF NOT ONE INCH ON ORIGINAL DRAWING FOR PRINT ON THIS SHEET, ADJUST SCALES ACCORDINGLY	SHEET CODE: C-27
	SHEET NUMBER: 62 OF 144

DOCUMENT NUMBER: CAE_CY-C-4018-65967

USERNAME: Jennford 12/23/2020 3:52 PM
FILENAME: K:\Active Projects\MP-40174005\Lower Calera Creek Project\SHEETS\C-27.dwg

Attachment 4
Page 62 of 144

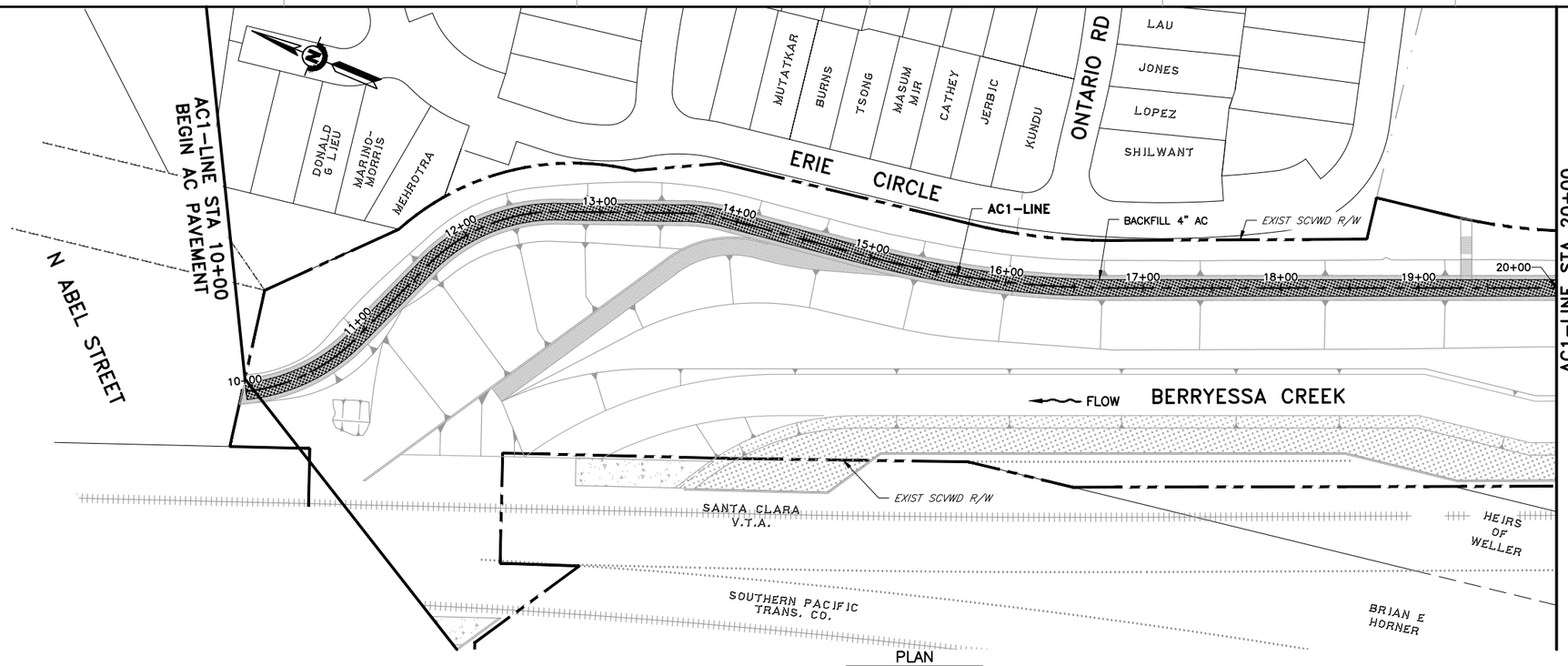

PLAN

SCALE 1" = 50'

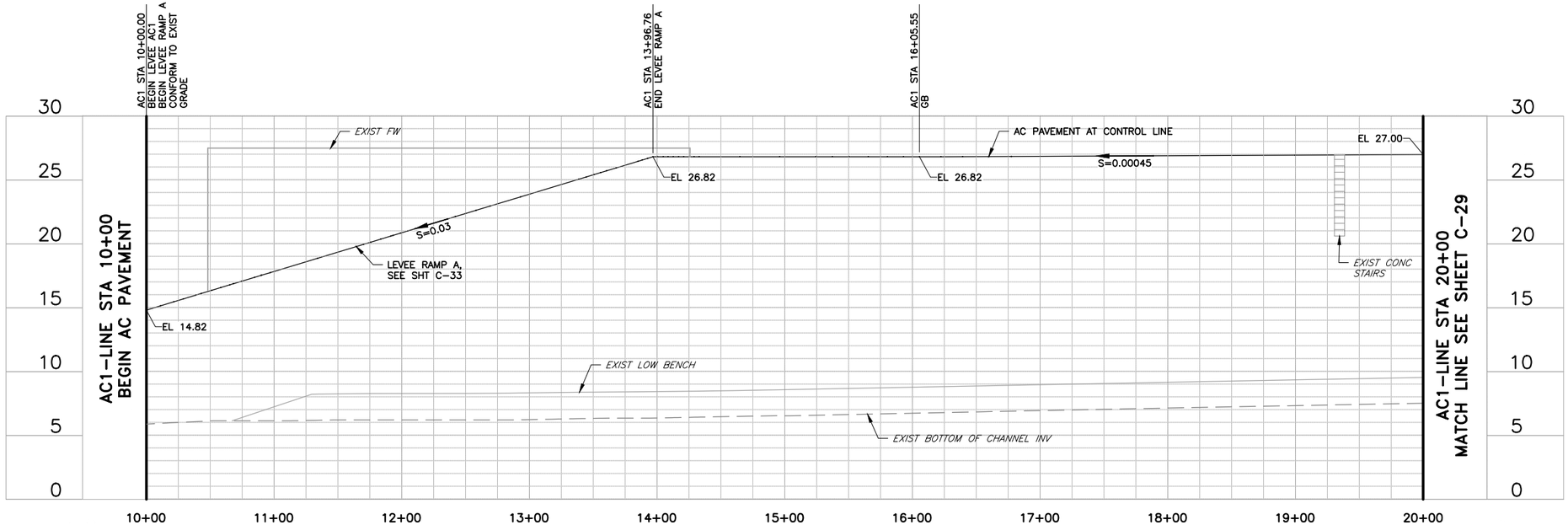

PROFILE

HORIZ: 1" = 50'
VERT: 1" = 5'

REV	DESCRIPTION	DATE	APPR

REFERENCE INFORMATION AND NOTES

1. LEFT AND RIGHT BANKS ARE VIEWED LOOKING UPSTREAM.

DATE	12/30/2020
DESIGN	Y. LEE
DRAWN	J. FORD
CHECKED	Y. LEE

ENGINEERING CERTIFICATION

REGISTERED PROFESSIONAL ENGINEER YOUHAN LEE No. C42456 CIVIL STATE OF CALIFORNIA

PROJECT ENGINEER — DATE 12.30.2020

SANTA CLARA VALLEY WATER DISTRICT

Valley Water

PROJECT NAME AND SHEET DESCRIPTION:

LOWER CALERA CREEK FLOOD PROTECTION PROJECT

PLAN AND PROFILE AC1-LINE STA 10+00 TO STA 20+00

SCALE	PROJECT NUMBER
AS SHOWN	40174005
VERIFY SCALES 0 1" IF NOT 1" INCH ON ORIGINAL DRAWING THIS SHEET, ADJUST SCALES ACCORDINGLY	SHEET CODE: C-28
	SHEET NUMBER: 63 OF 144

DOCUMENT NUMBER: CAE_CY-C-4018-65968

USERNAME: Jennford 12/23/2020 3:52 PM
FILENAME: K:\Active Projects\MP-40174005\Lower Calera Creek Project\SHEETS\C-28.dwg

Attachment 4
Page 63 of 144

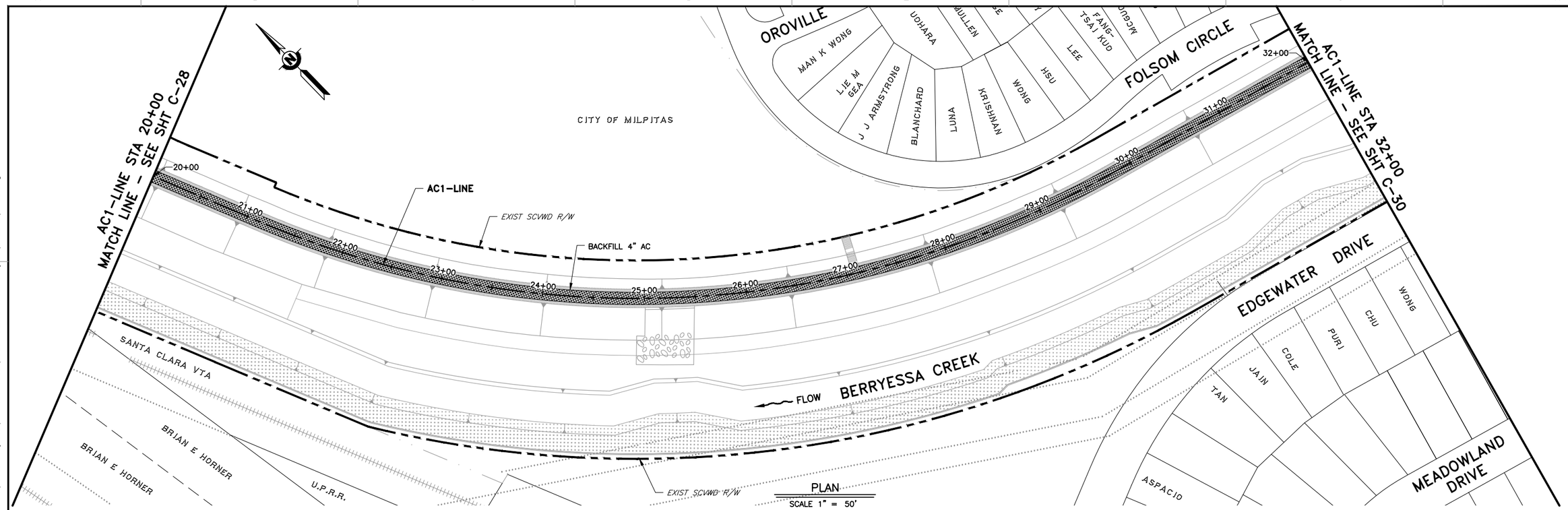

PLAN
SCALE 1" = 50'

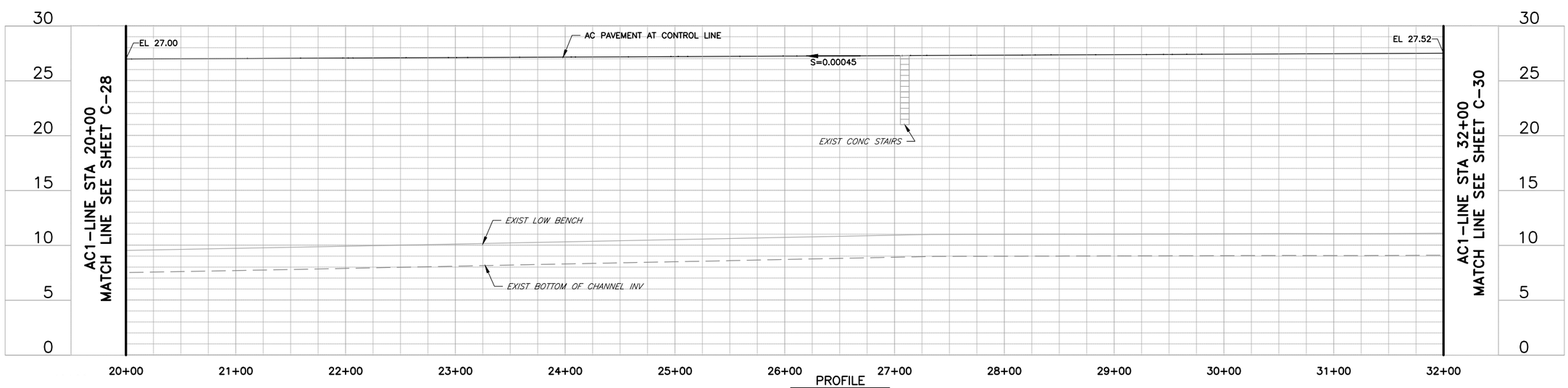

PROFILE
HORIZ: 1" = 50'
VERT: 1" = 5'

REV	DESCRIPTION	DATE	APPR

REFERENCE INFORMATION AND NOTES

1. LEFT AND RIGHT BANKS ARE VIEWED LOOKING UPSTREAM.

DATE 12/30/2020
DESIGN Y. LEE
DRAWN J. FORD
CHECKED Y. LEE

ENGINEERING CERTIFICATION
REGISTERED PROFESSIONAL ENGINEER YOUHAN LEE No. C42456 CIVIL STATE OF CALIFORNIA
PROJECT ENGINEER 12.30.2020 DATE

SANTA CLARA VALLEY WATER DISTRICT
Valley Water

PROJECT NAME AND SHEET DESCRIPTION:
LOWER CALERA CREEK
FLOOD PROTECTION PROJECT
PLAN AND PROFILE
AC1-LINE STA 20+00 TO STA 32+00

SCALE: AS SHOWN
VERIFY SCALES: 0 1"
IF NOT ONE INCH ON ORIGINAL DRAWING IF NOT ONE INCH ON THIS SHEET, ADJUST SCALES ACCORDINGLY

PROJECT NUMBER: 40174005
SHEET CODE: C-29
SHEET NUMBER: 64 OF 144

DOCUMENT NUMBER: CAE_CY-C-4018-65969

USERNAME: Jennford 12/23/2020 3:53 PM
FILENAME: K:\Active Projects\MP-40174005\Lower Calera Creek Project\SHEETS\C-29.dwg

Attachment 4
Page 64 of 144

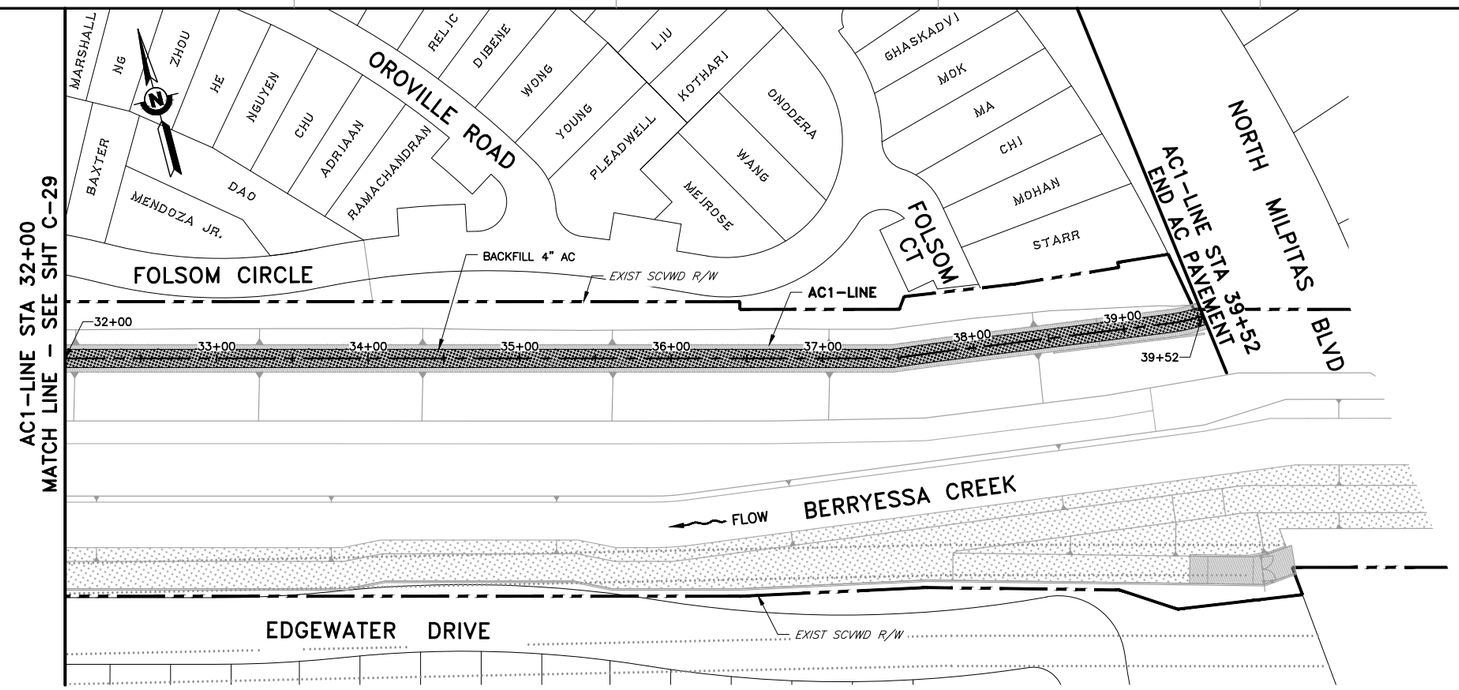

PLAN

SCALE 1" = 50'

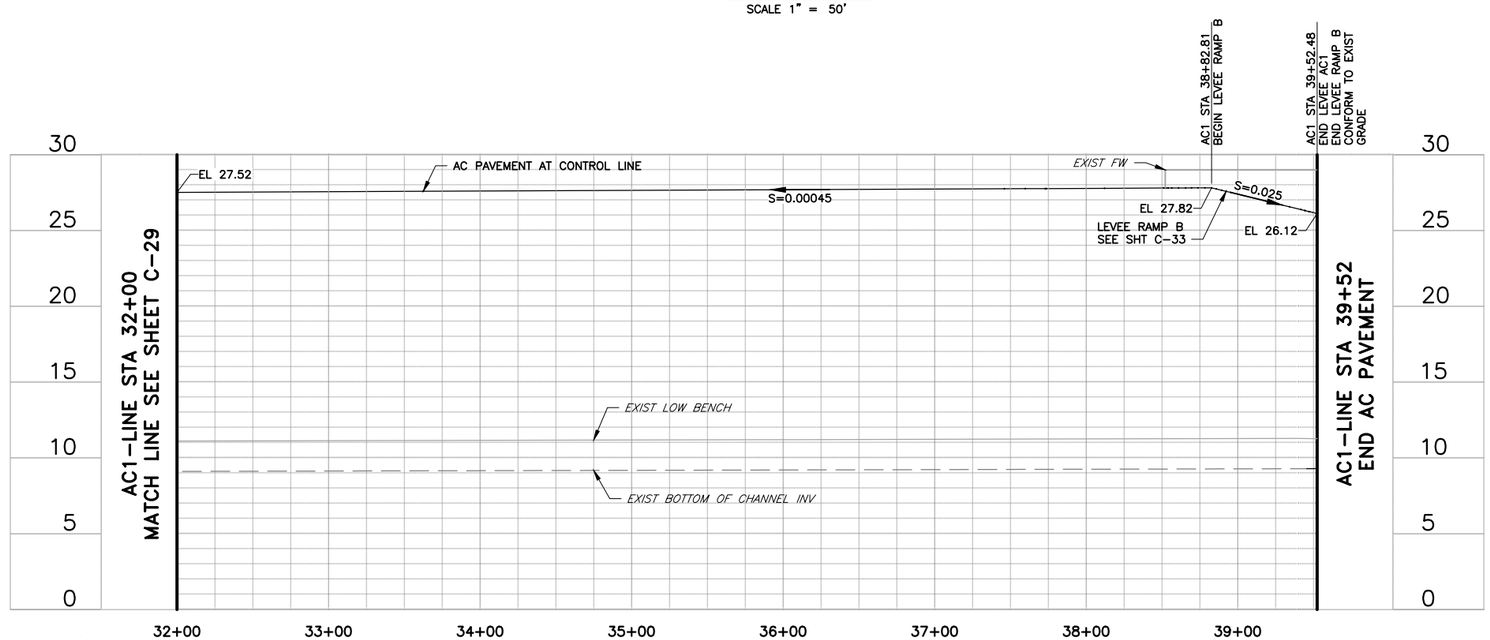

PROFILE

HORIZ: 1" = 50'
VERT: 1" = 5'

REV	DESCRIPTION	DATE	APPR

REFERENCE INFORMATION AND NOTES

1. LEFT AND RIGHT BANKS ARE VIEWED LOOKING UPSTREAM.

DATE	12/30/2020
DESIGN	Y. LEE
DRAWN	J. FORD
CHECKED	Y. LEE

ENGINEERING CERTIFICATION

REGISTERED PROFESSIONAL ENGINEER TOUHAN LEE No. C42456 CIVIL STATE OF CALIFORNIA

PROJECT ENGINEER — DATE 12.30.2020

SANTA CLARA VALLEY WATER DISTRICT

Valley Water

PROJECT NAME AND SHEET DESCRIPTION:

LOWER CALERA CREEK FLOOD PROTECTION PROJECT

PLAN AND PROFILE AC1-LINE STA 32+00 TO STA 39+52

SCALE	PROJECT NUMBER
AS SHOWN	40174005
VERIFY SCALES 0 1" IF NOT 1 INCH ON ORIGINAL DRAWING IF NOT 1 INCH ON THIS SHEET, ADJUST SCALES ACCORDINGLY	SHEET CODE: C-30
	SHEET NUMBER: 65 OF 144

USERNAME: Jennford 12/23/2020 3:53 PM
FILENAME: K:\Active Projects\MP-40174005\Lower Calera Creek Project\SHEETS\C-30.dwg

DOCUMENT NUMBER: CAE_CY-C-4018-65970

Attachment 4
Page 65 of 144

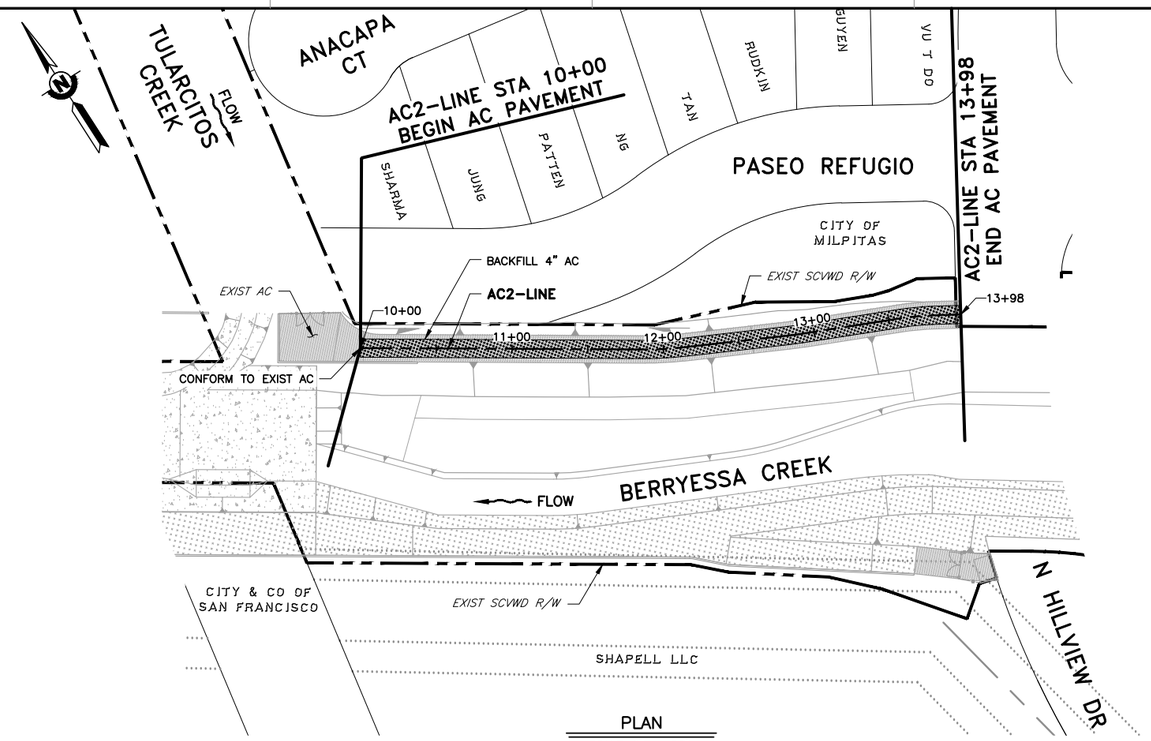

PLAN
SCALE 1" = 50'

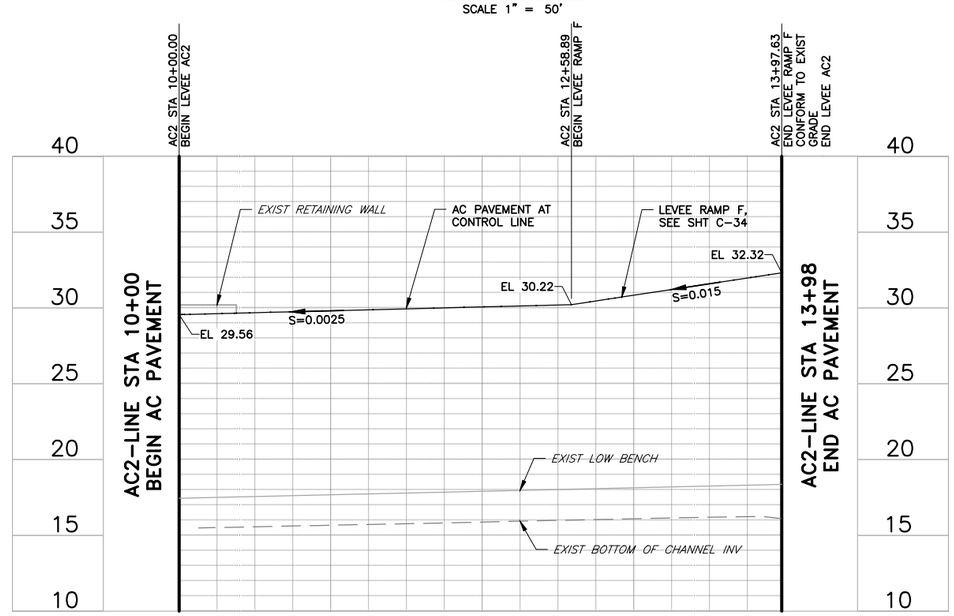

PROFILE
HORIZ: 1" = 50'
VERT: 1" = 5'

REV	DESCRIPTION	DATE	APPR

REFERENCE INFORMATION AND NOTES

1. LEFT AND RIGHT BANKS ARE VIEWED LOOKING UPSTREAM.

DATE 12/30/2020
DESIGN Y. LEE
DRAWN J. FORD
CHECKED Y. LEE

ENGINEERING CERTIFICATION
REGISTERED PROFESSIONAL ENGINEER YOUHAN LEE No. C42456 CIVIL STATE OF CALIFORNIA
12.30.2020
PROJECT ENGINEER DATE

SANTA CLARA VALLEY WATER DISTRICT
Valley Water

PROJECT NAME AND SHEET DESCRIPTION:

LOWER CALERA CREEK
FLOOD PROTECTION PROJECT

PLAN AND PROFILE
AC2-LINE STA 10+00 TO STA 13+98

SCALE AS SHOWN
VERIFY SCALES 0 1"
IF NOT ONE INCH ON ORIGINAL DRAWING IF NOT ONE INCH ON THIS SHEET, ADJUST SCALES ACCORDINGLY

PROJECT NUMBER 40174005
SHEET CODE: C-31
SHEET NUMBER: 66 OF 144

USERNAME: Jennford 12/23/2020 3:53 PM
FILENAME: K:\Active Projects\MP-40174005\Lower Calera Creek Project\SHEETS\C-31.dwg
DOCUMENT NUMBER: CAE_CY-C-4018-65971

Attachment 4
Page 66 of 144

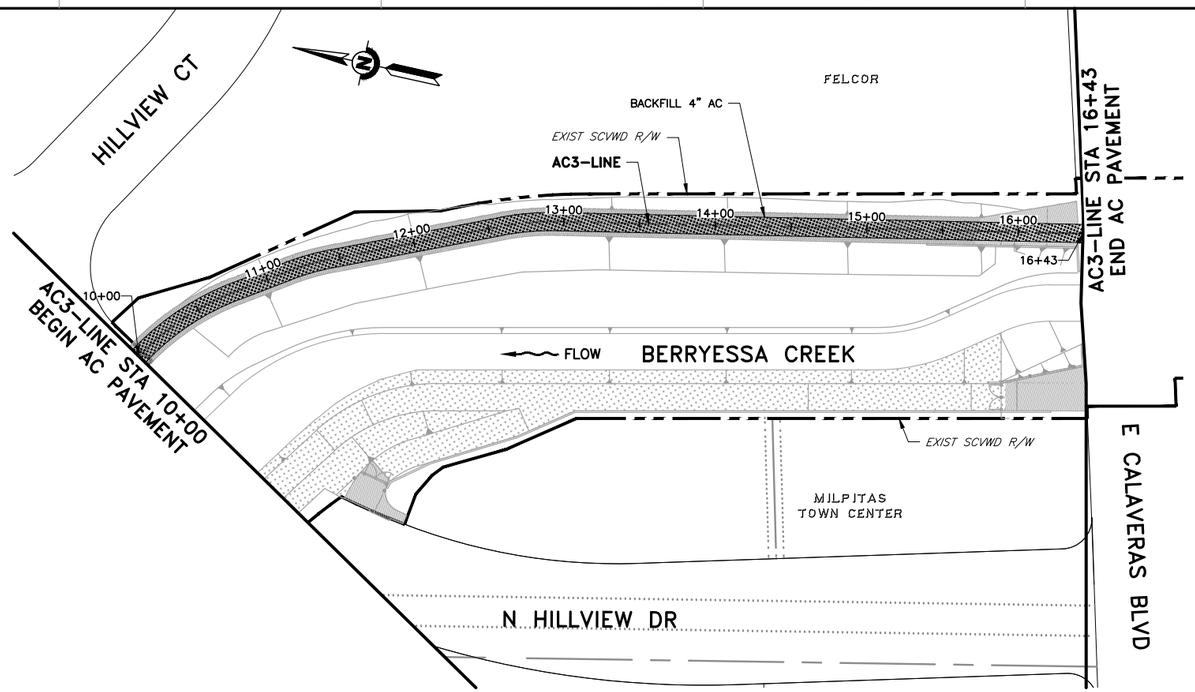

PLAN
SCALE 1" = 50'

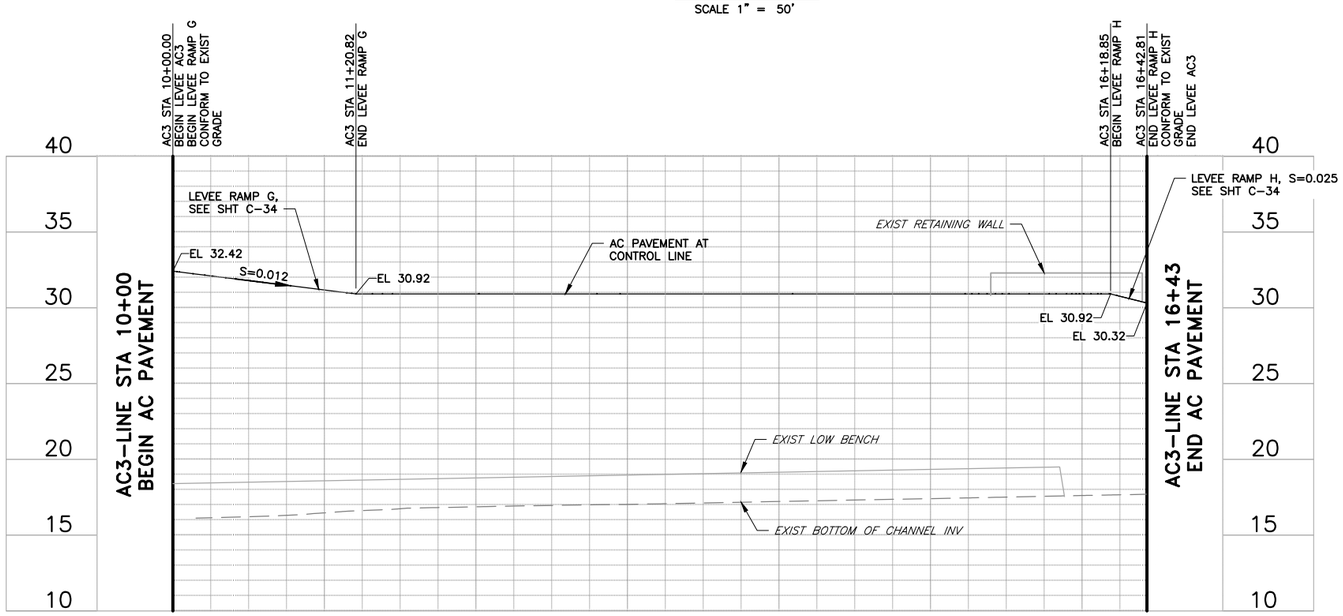

PROFILE
HORIZ: 1" = 50'
VERT: 1" = 5'

REV	DESCRIPTION	DATE	APPR

REFERENCE INFORMATION AND NOTES

1. LEFT AND RIGHT BANKS ARE VIEWED LOOKING UPSTREAM.

DATE	12/30/2020
DESIGN	Y. LEE
DRAWN	J. FORD
CHECKED	Y. LEE

ENGINEERING CERTIFICATION

REGISTERED PROFESSIONAL ENGINEER TOUHAN LEE No. C42456 CIVIL STATE OF CALIFORNIA

PROJECT ENGINEER — DATE 12.30.2020

SANTA CLARA VALLEY WATER DISTRICT

Valley Water

PROJECT NAME AND SHEET DESCRIPTION:

LOWER CALERA CREEK
FLOOD PROTECTION PROJECT

PLAN AND PROFILE
AC3-LINE STA 10+00 TO STA 16+43

SCALE	PROJECT NUMBER
AS SHOWN	40174005
VERIFY SCALES 0 1" IF THIS LINE 1 INCH ON ORIGINAL DRAWING IF NOT 1 INCH ON THIS SHEET, ADJUST SCALES ACCORDINGLY	SHEET CODE: C-32
	SHEET NUMBER: 67 OF 144

USERNAME: Jennford 12/23/2020 3:53 PM
FILENAME: K:\Active Projects\MP-40174005\Lower Calera Creek Project\SHEETS\C-32.dwg

DOCUMENT NUMBER: CAE_CY-C-4018-65972

Attachment 4
Page 67 of 144

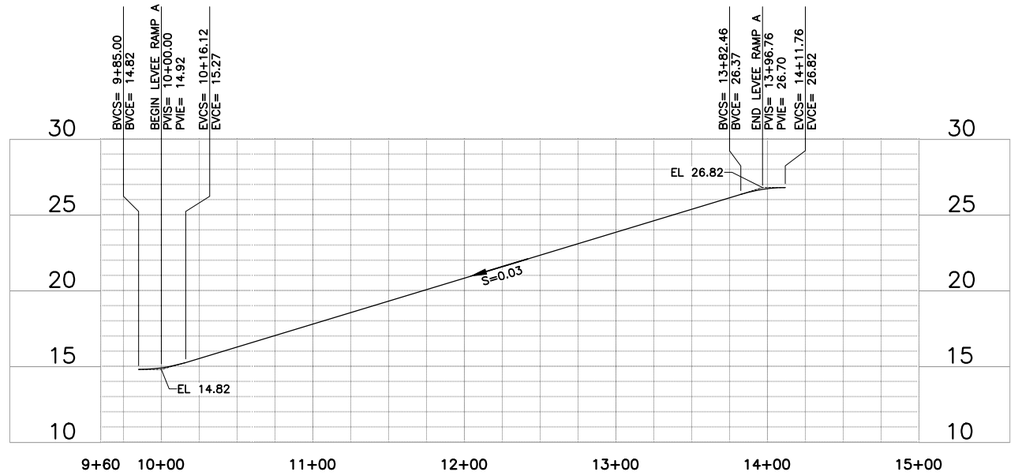

PROFILE – LEVEE RAMP A

HORIZ: 1" = 50'
VERT: 1" = 5'

LEVEE RAMP A PROFILE (LT BANK, ACCESS ROAD)		
STATION (AC1)	EL	NOTE
9+85	14.82	BVC
9+90	14.83	VERTICAL CURVE L=31.12'
9+95	14.87	
10+00	14.92	
10+05.37	15.01	
10+10.75	15.13	
10+16.12	15.27	EVC
10+16.12 TO 13+82.46		S=0.03
13+82.46	26.37	BVC
13+87.23	26.50	VERTICAL CURVE L=29.3'
13+91.99	26.61	
13+96.76	26.70	
14+01.76	26.77	
14+06.76	26.81	
14+11.76	26.82	EVC

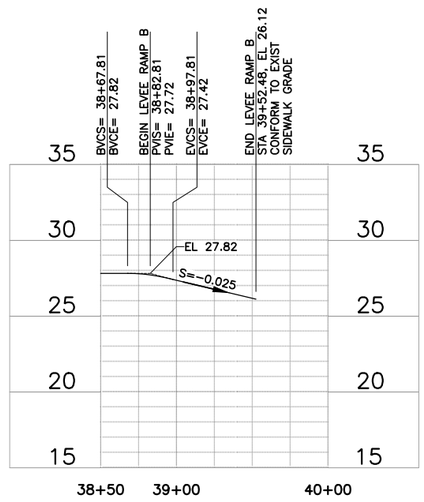

PROFILE – LEVEE RAMP B

HORIZ: 1" = 50'
VERT: 1" = 5'

LEVEE RAMP B PROFILE (LT BANK, N. MILPITAS BLVD, D/S)		
STATION (AC1)	EL	NOTE
38+67.81	27.82	BVC
38+72.81	27.81	VERTICAL CURVE L=30'
38+77.81	27.78	
38+82.81	27.72	
38+87.81	27.64	
38+92.81	27.54	
38+97.81	27.42	EVC
38+97.81 TO 39+52.48		S=-0.025
39+52.48	26.12	END RAMP

REV	DESCRIPTION	DATE	APPR	REFERENCE INFORMATION AND NOTES
	Attachment 4 Page 68 of 144			

DATE 12/30/2020
DESIGN Y. LEE
DRAWN J. FORD
CHECKED Y. LEE

ENGINEERING CERTIFICATION
REGISTERED PROFESSIONAL ENGINEER YOUHAN LEE No. C42456 CIVIL STATE OF CALIFORNIA
PROJECT ENGINEER 12.30.2020 DATE

SANTA CLARA VALLEY WATER DISTRICT
Valley Water

PROJECT NAME AND SHEET DESCRIPTION:
LOWER CALERA CREEK
FLOOD PROTECTION PROJECT
LEVEE RAMP
PROFILES AND TABLES

SCALE AS SHOWN
VERIFY SCALES 0 1"
IF NOT ONE INCH ON ORIGINAL DRAWING IF NOT ONE INCH ON THIS SHEET, ADJUST SCALES ACCORDINGLY

PROJECT NUMBER 40174005
SHEET CODE: C-33
SHEET NUMBER: 68 OF 144

Attachment 4
Page 68 of 144

USERNAME: Jennford 12/23/2020 3:54 PM
FILENAME: K:\Active Projects\MP-40174005\Lower Calera Creek Project\SHEETS\C-33.dwg
DOCUMENT NUMBER: CAE_CY-C-4018-65973

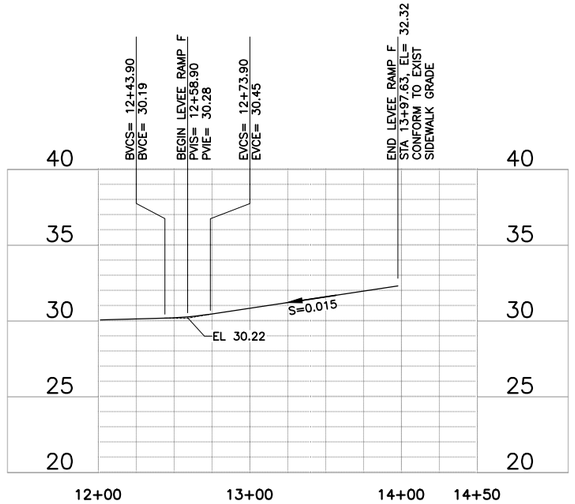

PROFILE – LEVEE RAMP F

HORIZ: 1" = 50'
VERT: 1" = 5'

LEVEE RAMP F PROFILE (LT BANK, N. HILLVIEW DR, D/S)		
STATION (AC2)	EL	NOTE
12+43.90	30.19	BVC
12+48.90	30.21	VERTICAL CURVE L=30'
12+53.90	30.24	
12+58.90	30.28	
12+63.90	30.33	
12+68.90	30.39	
12+73.90	30.45	EVC
12+73.90 TO 13+97.63		S=0.015
13+97.63	32.32	END RAMP

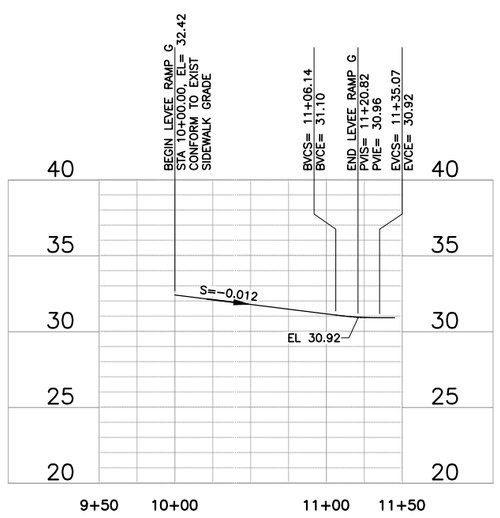

PROFILE – LEVEE RAMP G

HORIZ: 1" = 50'
VERT: 1" = 5'

LEVEE RAMP G PROFILE (LT BANK, N. HILLVIEW DR, U/S)		
STATION (AC3)	EL	NOTE
10+00	32.42	BEGIN RAMP
10+00 TO 11+06.14		S=-0.012
11+06.14	31.10	BVC
11+11.03	31.04	VERTICAL CURVE L=28.93'
11+15.93	31.00	
11+20.82	30.96	
11+25.57	30.94	
11+30.32	30.92	
11+35.07	30.92	EVC

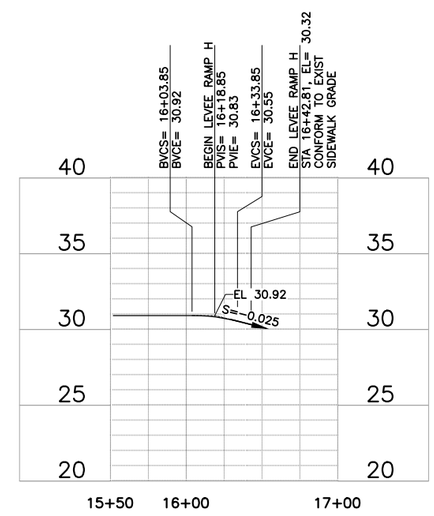

PROFILE – LEVEE RAMP H

HORIZ: 1" = 50'
VERT: 1" = 5'

LEVEE RAMP H PROFILE (LT BANK, E. CALAVERAS BLVD, D/S)		
STATION (AC3)	EL	NOTE
16+03.85	30.92	BVC
16+08.85	30.91	VERTICAL CURVE L=30'
16+13.85	30.88	
16+18.85	30.83	
16+23.85	30.75	
16+28.85	30.66	
16+33.85	30.55	EVC
16+33.85 TO 16+42.81		S=-0.025
16+42.81	30.32	END RAMP

USERNAME: Jennford 12/23/2020 3:54 PM
FILENAME: K:\Active Projects\MP-40174005\Lower Calera Creek Project\SHEETS\C-34.dwg

DOCUMENT NUMBER: CAE_CY-C-4018-65974

REV	DESCRIPTION	DATE	APPR	REFERENCE INFORMATION AND NOTES

Attachment 4
Page 69 of 144

DATE 12/30/2020
DESIGN Y. LEE
DRAWN J. FORD
CHECKED Y. LEE

ENGINEERING CERTIFICATION
REGISTERED PROFESSIONAL ENGINEER YOUHAN LEE No. C42456 CIVIL STATE OF CALIFORNIA
PROJECT ENGINEER 12.30.2020 DATE

SANTA CLARA VALLEY WATER DISTRICT
Valley Water

PROJECT NAME AND SHEET DESCRIPTION:
LOWER CALERA CREEK
FLOOD PROTECTION PROJECT
LEVEE RAMP
PROFILES AND TABLES

SCALE AS SHOWN
VERIFY SCALES 0 1"
IF NOT ONE INCH ON ORIGINAL DRAWING IF NOT ONE INCH ON THIS SHEET, ADJUST SCALES ACCORDINGLY

PROJECT NUMBER 40174005
SHEET CODE: C-34
SHEET NUMBER: 69 OF 144

Attachment 4
Page 69 of 144

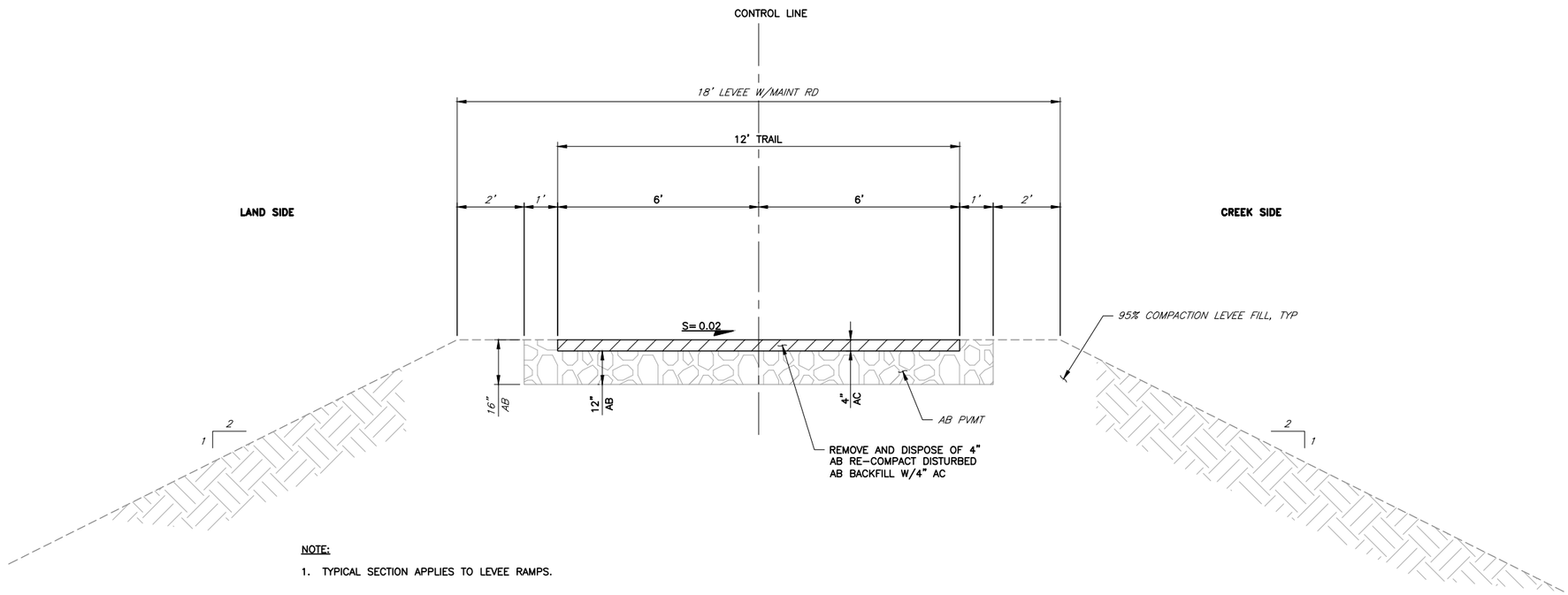

NOTE:

1. TYPICAL SECTION APPLIES TO LEVEE RAMPS.

DETAIL 1 / – LT BANK TYPICAL AC REPLACEMENT
(AC1 STA 10+00 TO STA 39+52)
(AC2 STA 10+00 TO STA 13+98)
(AC3 STA 10+00 TO STA 16+43)
SCALE: 1/2" = 1'-0"

USERNAME: Jennford 12/23/2020 3:54 PM
FILENAME: K:\Active Projects\MP-40174005\Lower Calera Creek Project\SHEETS\C-35.dwg

DOCUMENT NUMBER: CAE_CY-C-4018-65975

REV	DESCRIPTION	DATE	APPR	REFERENCE INFORMATION AND NOTES

DATE 12/30/2020
DESIGN Y. LEE
DRAWN J. FORD
CHECKED Y. LEE

ENGINEERING CERTIFICATION
REGISTERED PROFESSIONAL ENGINEER YOUHAN LEE No. C42456 CIVIL STATE OF CALIFORNIA
12.30.2020
PROJECT ENGINEER DATE

SANTA CLARA VALLEY WATER DISTRICT
Valley Water

PROJECT NAME AND SHEET DESCRIPTION:
LOWER CALERA CREEK
FLOOD PROTECTION PROJECT
MAINTENANCE ROAD AC PAVING DETAIL

SCALE AS SHOWN
VERIFY SCALES 0 1"
IF NOT ONE INCH ON ORIGINAL DRAWING IF NOT ONE INCH ON THIS SHEET, ADJUST SCALES ACCORDINGLY

PROJECT NUMBER 40174005
SHEET CODE: C-35
SHEET NUMBER: 70 OF 144

Attachment 4
Page 70 of 144

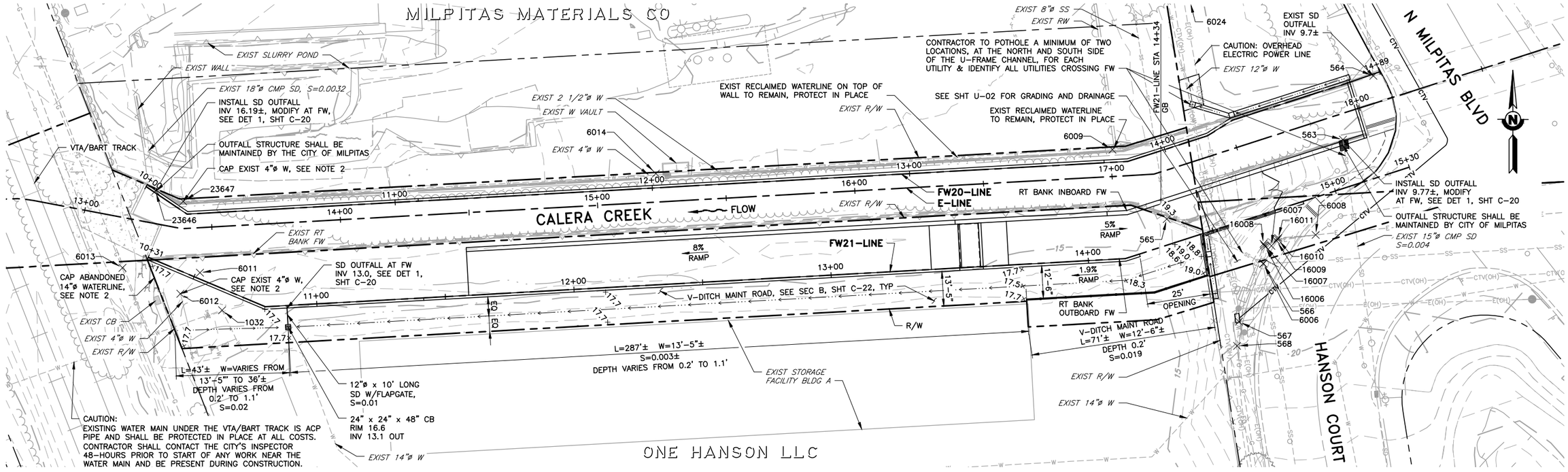

DETAIL 1 / C-01 UTILITY RELOCATION

SCALE: 1" = 20'

POINT TABLE				
POINT	NORTHING	EASTING	ELEVATION	DESCRIPTION
563	1988007.1390	6152664.0010	INV 9.8	SD CMP
564	1988031.8890	6152675.7950	INV 9.7	SD RCP
565	1987976.2940	6152595.6220	8.2	8" SS
566	1987958.9530	6152633.0690	6.6	8" SS
567	1987936.4970	6152623.6480	6.8	12" W
568	1987927.0970	6152622.9210	7.3	12" W
1032	1987940.9260	6152228.9200	13.8	14" WATER LINE BEND
6006	1987959.0620	6152633.1140	21.1	SSMH
6007	1987965.9320	6152636.2360	16.2	E
6008	1987970.1640	6152653.4100	18.5	4" PG&E GAS
6009	1988003.2550	6152574.5320	12.0	4" W
6011	1987955.4990	6152220.3280	7.2	4" W
6012	1987947.3400	6152212.7310	10.0	4" W
6013	1987957.3930	6152190.2670	7.8	8" G (CHEVRON)
6014	1987993.9780	6152397.2950	13.0	4" W
6024	1988164.8620	6152572.6810	16.5	12" WV
16006	1987965.6670	6152633.8260	16.6	4" E
16007	1987966.1660	6152633.4700	16.8	4" FO
16008	1987966.6950	6152633.1750	17.0	2" G
16009	1987967.9070	6152638.2060	17.5	4" E
16010	1987968.5520	6152638.6190	17.5	4" FO
16011	1987968.9760	6152638.8900	17.6	2" G
23646	1987987.2250	6152203.0550	16.2	SD CMP
23647	1987983.1509	6152213.8212		4" W TIE IN

NOTE:
EXCEPT WHERE SHOWN AS INV, ALL ELEVATIONS ARE TO TOP OF PIPE.

NOTES:
1. CITY OF MILPITAS AND MILPITAS MATERIALS COMPANY SHALL BE NOTIFIED 72 HOURS IN ADVANCE OF WATERLINE WORK.
2. CONTRACTOR SHALL POTHOLE TO CONFIRM TIE-IN LOCATIONS, SIZE OF EXISTING PIPE, AND EXISTING PIPE MATERIAL IN ADVANCE OF UTILITY LINE WORK.

CAUTION:
CAUTION SHOULD BE TAKEN WHILE WORKING ON U-FRAME CHANNEL, UTILITY LINE CROSSINGS UNDER U-FRAME CHANNEL.

REV	DESCRIPTION	DATE	APPR	REFERENCE INFORMATION AND NOTES

DATE 12/30/2020
DESIGN Y. LEE
DRAWN R. STILL
CHECKED Y. LEE

ENGINEERING CERTIFICATION
REGISTERED PROFESSIONAL ENGINEER TOUHAN LEE No. C42456 CIVIL STATE OF CALIFORNIA
PROJECT ENGINEER 12.30.2020 DATE

SANTA CLARA VALLEY WATER DISTRICT
Valley Water

PROJECT NAME AND SHEET DESCRIPTION:
LOWER CALERA CREEK FLOOD PROTECTION PROJECT
VTA/BART TO NORTH MILPITAS BOULEVARD GRADING AND DRAINAGE

SCALE: AS SHOWN
VERIFY SCALES: 0 1" — IF NOT ONE INCH ON ORIGINAL DRAWING IF NOT ONE INCH ON THIS SHEET, ADJUST SCALES ACCORDINGLY
PROJECT NUMBER: 40174005
SHEET CODE: U-01
SHEET NUMBER: 71 OF 144

DOCUMENT NUMBER: CAE_CY-U-4018-65976
USERNAME: Jennford 12/24/2020-12:09 PM
FILENAME: K:\Active Projects\MP-40174005\Lower Calera Creek Project\SHEETS\U-01.dwg

Attachment 4
Page 71 of 144

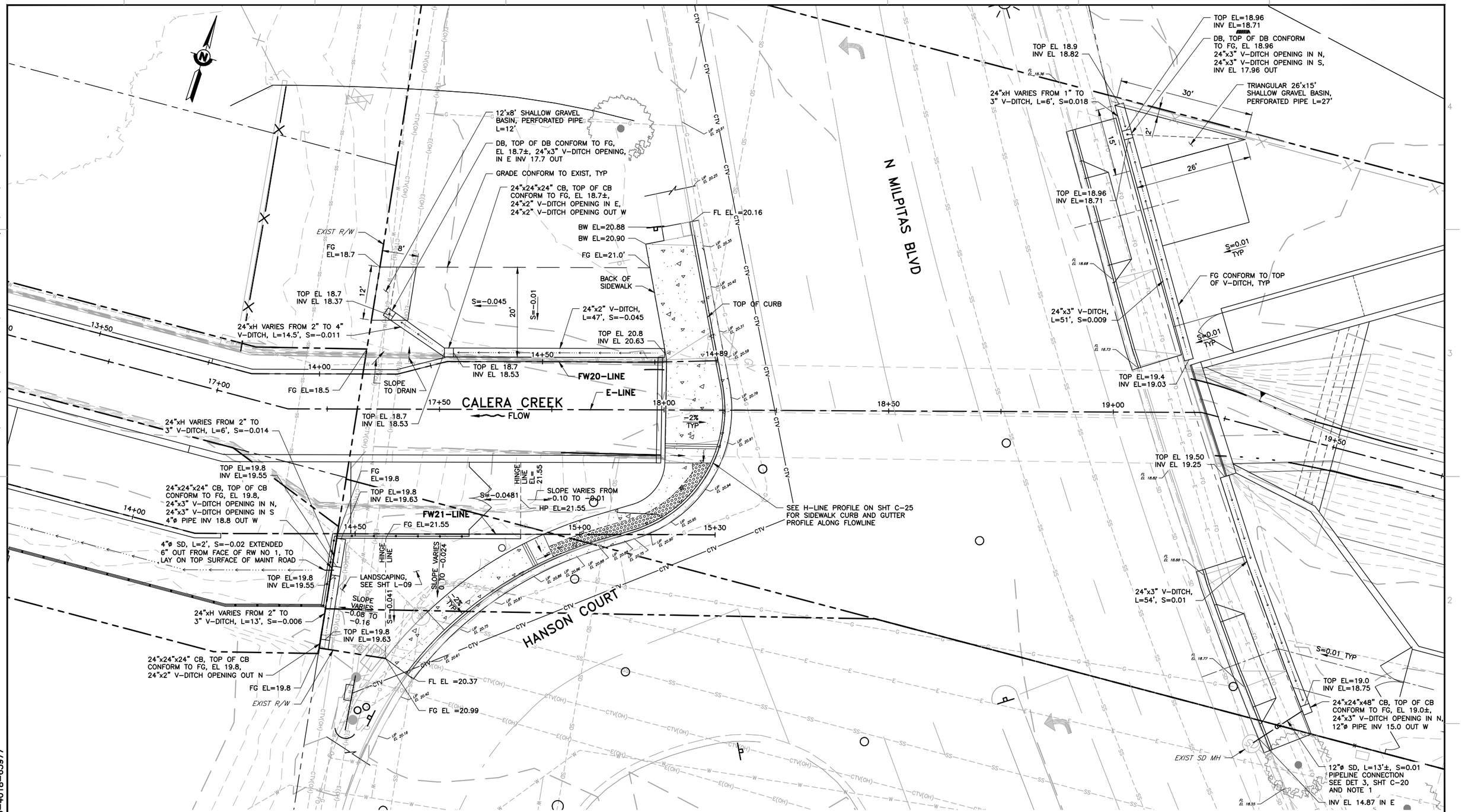

PLAN

SCALE: 1" = 10'

REV	DESCRIPTION	DATE	APPR

REFERENCE INFORMATION AND NOTES

1. CONTRACTOR SHALL COORDINATE WITH CITY OF MILPITAS TO MAKE FIELD ADJUSTMENTS AS NEEDED BASED ON THE PIPE MATERIAL AND THE ALIGNMENT OF MANHOLE.
2. CONTRACTOR SHALL FIELD VERIFY PIPE MATERIAL, SIZE AND ELEVATION AT CONNECTION.
3. FOR CB, SEE DET 1, SHT C-26.
4. FOR V-DITCH, SEE SEC C, SHT C-20.
5. FOR SHALLOW GRAVEL BASIN AND DB, SEE DET 2, SHT C-26.

DATE 12/30/2020
DESIGN Y. LEE
DRAWN P. KEY
CHECKED Y. LEE

ENGINEERING CERTIFICATION

REGISTERED PROFESSIONAL ENGINEER YOUHAN LEE No. C42456 CIVIL STATE OF CALIFORNIA

PROJECT ENGINEER 12.30.2020 DATE

SANTA CLARA VALLEY WATER DISTRICT

Valley Water

PROJECT NAME AND SHEET DESCRIPTION:

LOWER CALERA CREEK FLOOD PROTECTION PROJECT

NORTH MILPITAS BOULEVARD GRADING AND DRAINAGE

SCALE: AS SHOWN

VERIFY SCALES: 0 1"

IF NOT ONE INCH ON ORIGINAL DRAWING THIS SHEET, ADJUST SCALES ACCORDINGLY

PROJECT NUMBER: 40174005

SHEET CODE: U-02

SHEET NUMBER: 72 OF 144

DOCUMENT NUMBER: CAE_CY-U-4018-65977

USERNAME: Jennford 12/23/2020 4:21 PM
FILENAME: K:\Active Projects\MP-40174005\Lower Calera Creek Project\SHEETS\U-02.dwg

Attachment 4
Page 72 of 144

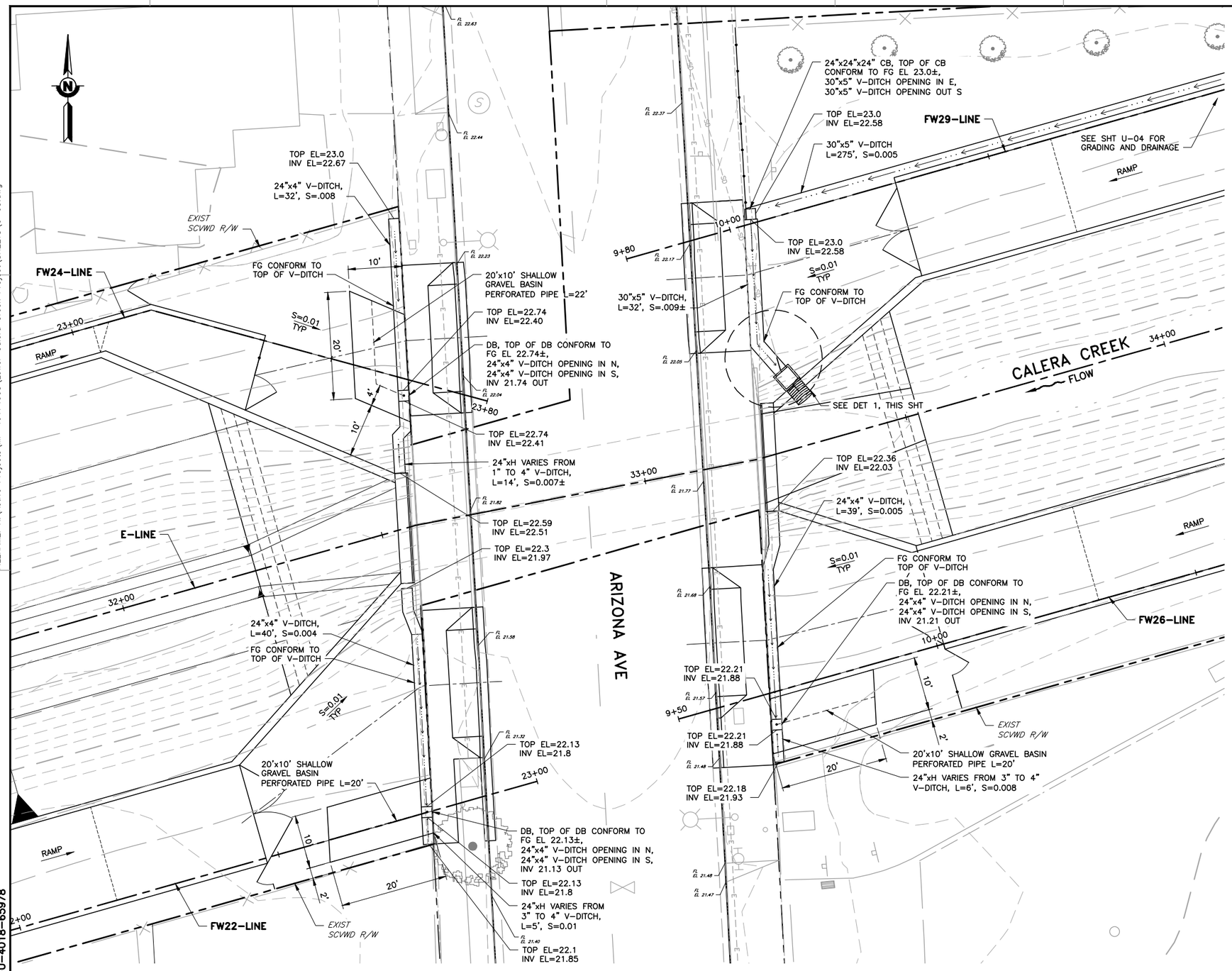

PLAN

SCALE: 1" = 10'

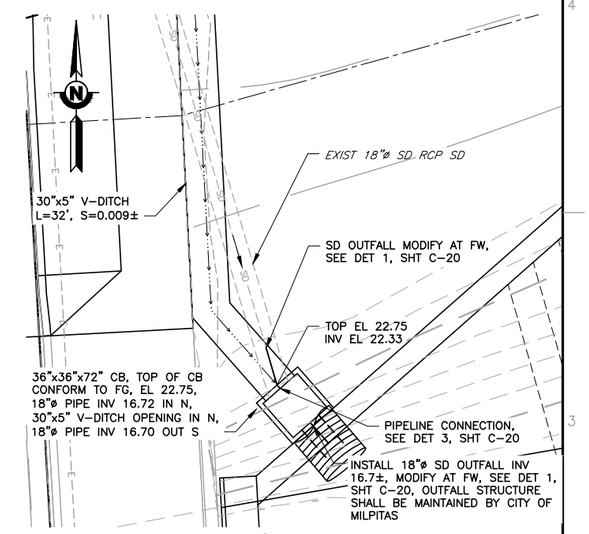

DETAIL 1 ENLARGED VIEW

SCALE: 1" = 5'

NOTES:

1. FOR CB SEE DET 1, SHT C-26.
2. FOR V-DITCH, SEE SEC C, SHT C-20.
3. FOR SHALLOW GRAVEL BASIN AND DB, SEE DET 2, SHT C-26.

USERNAME: Jennford 12/24/2020-12:58 PM
FILENAME: K:\Active Projects\MP-40174005\Lower Calera Creek Project\SHEETS\U-03.dwg

DOCUMENT NUMBER: CAE_CY-U-4018-65978

REV	DESCRIPTION	DATE	APPR	REFERENCE INFORMATION AND NOTES

Attachment 4
Page 73 of 144

DATE	ENGINEERING CERTIFICATION	SANTA CLARA VALLEY WATER DISTRICT	PROJECT NAME AND SHEET DESCRIPTION:	SCALE	PROJECT NUMBER
12/30/2020	REGISTERED PROFESSIONAL ENGINEER TOUHAN LEE No. C42456 CIVIL STATE OF CALIFORNIA	Valley Water	LOWER CALERA CREEK FLOOD PROTECTION PROJECT	AS SHOWN	40174005
DESIGN Y. LEE				VERIFY SCALES 0 1"	SHEET CODE:
DRAWN J. FORD			ARIZONA AVENUE GRADING AND DRAINAGE	IF NOT ONE INCH ON ORIGINAL DRAWING IF NOT ONE INCH ON THIS SHEET, ADJUST SCALES ACCORDINGLY	U-03
CHECKED Y. LEE	PROJECT ENGINEER 12.30.2020 DATE				SHEET NUMBER: 73 OF 144

Attachment 4
Page 73 of 144

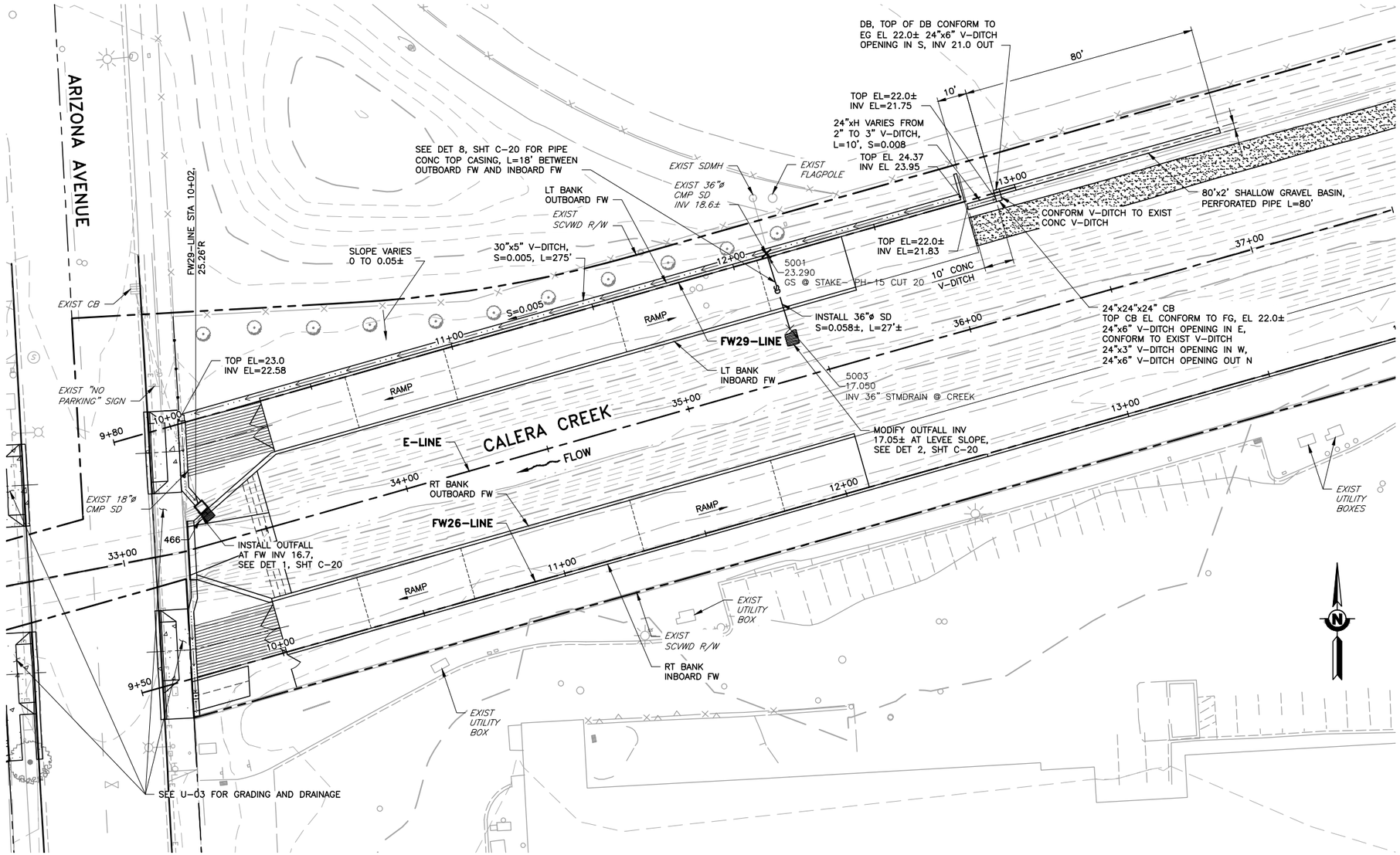

NOTES:

1. FOR V-DITCH, SEE SEC C, SHT C-20.
2. FOR SHALLOW GRAVEL BASIN AND DB, SEE DET 2, SHT C-26.
3. CONTRACTOR SHALL FIELD VERIFY PIPE MATERIAL, SIZE AND ELEVATION AT CONNECTION.

DETAIL 1 / C-08 UTILITY RELOCATION
SCALE: 1" = 20'
C-17

POINT TABLE

POINT	NORTHING	EASTING	ELEVATION	DESCRIPTION
466	1988634.9070	6153992.1240	INV 16.7	CMP
5001	1988724.7500	6154184.9600	21.62	GS @ STAKE- PH-15 CUT 20
5003	1988699.0000	6154193.0000	INV 17.05	INV 36" STMDRAIN @ CREEK

NOTE:
1. EXCEPT WHERE SHOWN AS INV, ALL ELEVATIONS ARE TO TOP OF PIPE.

REV	DESCRIPTION	DATE	APPR	REFERENCE INFORMATION AND NOTES

Attachment 4
Page 74 of 144

DATE 12/30/2020
DESIGN Y. LEE
DRAWN R. STILL
CHECKED Y. LEE

ENGINEERING CERTIFICATION
REGISTERED PROFESSIONAL ENGINEER YOUHAN LEE No. C42456 CIVIL STATE OF CALIFORNIA
PROJECT ENGINEER 12.30.2020 DATE

SANTA CLARA VALLEY WATER DISTRICT
Valley Water

PROJECT NAME AND SHEET DESCRIPTION:
LOWER CALERA CREEK FLOOD PROTECTION PROJECT
ARIZONA AVENUE UPSTREAM GRADING AND DRAINAGE

SCALE: AS SHOWN
VERIFY SCALES: 0 1" — IF NOT ONE INCH ON ORIGINAL DRAWING, IF NOT ONE INCH ON THIS SHEET, ADJUST SCALES ACCORDINGLY
PROJECT NUMBER: 40174005
SHEET CODE: U-04
SHEET NUMBER: 74 OF 144

Attachment 4
Page 74 of 144

USERNAME: Jennford 12/24/2020 1:05 PM
FILENAME: K:\Active Projects\MP-40174005\Lower Calera Creek Project\SHEETS\U-04.dwg
DOCUMENT NUMBER: CAE_CY-U-4018-65979

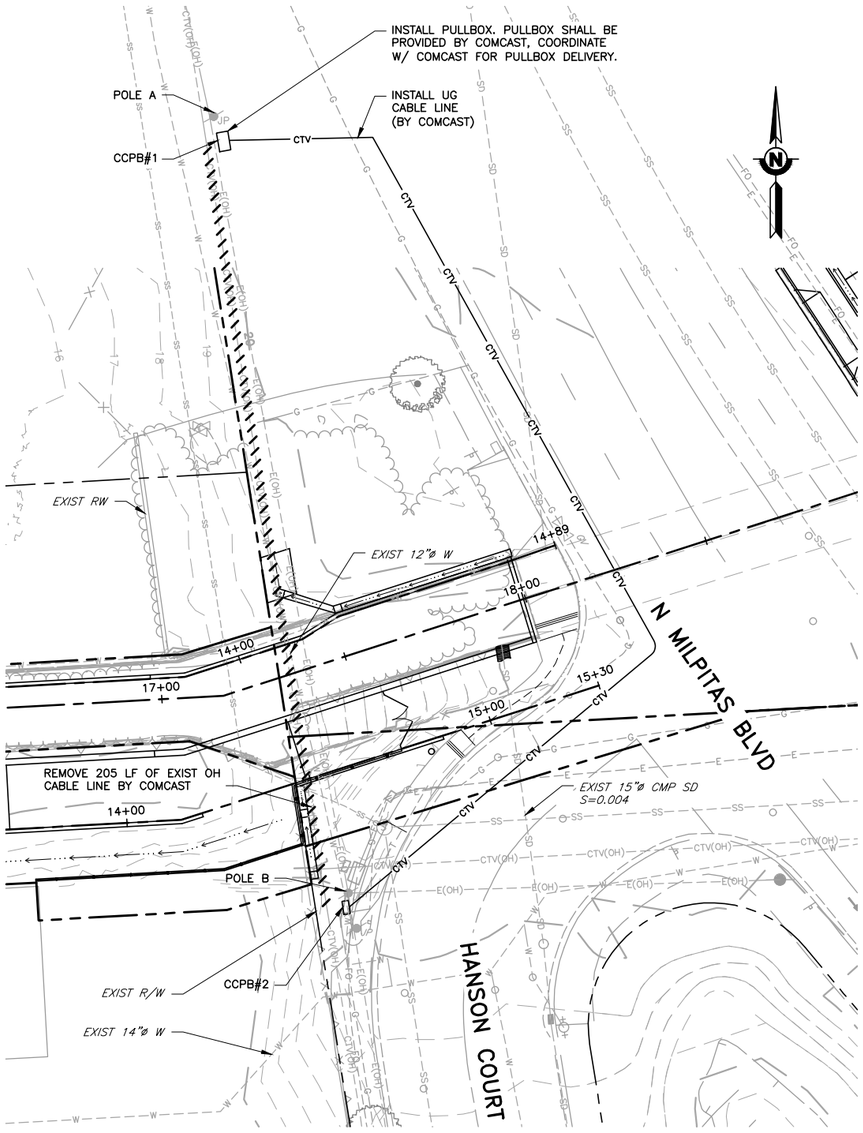

DETAIL 1 / C-01 CTV RELOCATION
SCALE: 1" = 20'

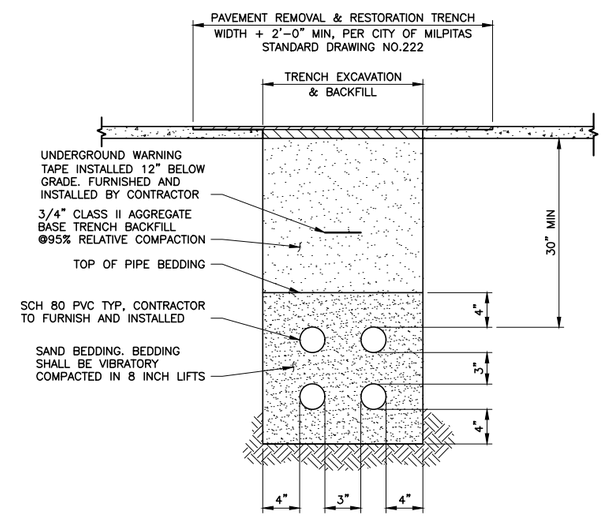

NOTE: MINIMUM 1-FOOT VERTICAL CLEARANCE SHALL BE REQUIRED FROM ANY CITY UTILITY.

SECTION A / – TYPICAL TRENCH SECTION
SCALE: NTS

NOTES:

1. PRIOR TO START OF WORK CONTRACTOR SHALL PERFORM SURVEYS (ABOVE GROUND AND BELOW GROUND), CALL "811", AND POTHOLE FOR DEPTHS.
2. NEW WORK SHOW PULLBOXES, CONDUITS, AND GENERAL LOCATION AND ROUTING OF RACEWAYS FOR OVERHEAD TO UNDERGROUND CONVERSION. CONTRACTOR SHALL MAKE FIELD ADJUSTMENTS TO MEET COMCAST REQUIREMENTS TO ACCOMMODATE EXISTING FIELD CONDITIONS IN ORDER TO INSTALL A COMPLETE RACEWAYS SYSTEM.
3. OBTAIN NECESSARY PERMITS TO PERFORM THE WORK FROM COMCAST AND CITY OF MILPITAS.
4. COORDINATE OVERHEAD AND UNDERGROUND RELOCATION WORK WITH COMCAST. WORK SHALL BE APPROVED, INSPECTED, AND SCHEDULED WITH COMCAST AND THE CITY OF MILPITAS.

REFERENCE NOTES:

1. CCPB#1 – LOW VOLTAGE PULLBOX SHALL BE B52" VAULT, 36"x60"x24" (PROVIDED BY COMCAST).
2. CCPB#2 – LOW VOLTAGE PULLBOX SHALL BE B44" VAULT, 20"x42"x17" (PROVIDED BY COMCAST).
3. PROVIDE 3-2"C FOR COMCAST UNDERGROUND LINE.
4. PROVIDE 1-4"C STUBS UP FROM CCPB#1 AND CCPB#2 TO POLES A AND B.

USERNAME: Jennford 12/24/2020 1:13 PM
FILENAME: K:\Active Projects\MP-40174005\Lower Calera Creek Project\SHEETS\U-05.dwg

DOCUMENT NUMBER: CAE_CY-U-4018-65980

REV	DESCRIPTION	DATE	APPR

REFERENCE INFORMATION AND NOTES
.

DATE 12/30/2020
DESIGN Y. LEE
DRAWN R. STILL
CHECKED Y. LEE

ENGINEERING CERTIFICATION
REGISTERED PROFESSIONAL ENGINEER TOUHAN LEE No. C42456 CIVIL STATE OF CALIFORNIA
12.30.2020
PROJECT ENGINEER DATE

SANTA CLARA VALLEY WATER DISTRICT
Valley Water

PROJECT NAME AND SHEET DESCRIPTION:
LOWER CALERA CREEK
FLOOD PROTECTION PROJECT
UTILITY RELOCATION DETAIL

SCALE AS SHOWN
VERIFY SCALES 0 1"
IF NOT ONE INCH ON ORIGINAL DRAWING IF NOT ONE INCH ON THIS SHEET, ADJUST SCALES ACCORDINGLY

PROJECT NUMBER 40174005
SHEET CODE: U-05
SHEET NUMBER: 75 OF 144

Attachment 4
Page 75 of 144

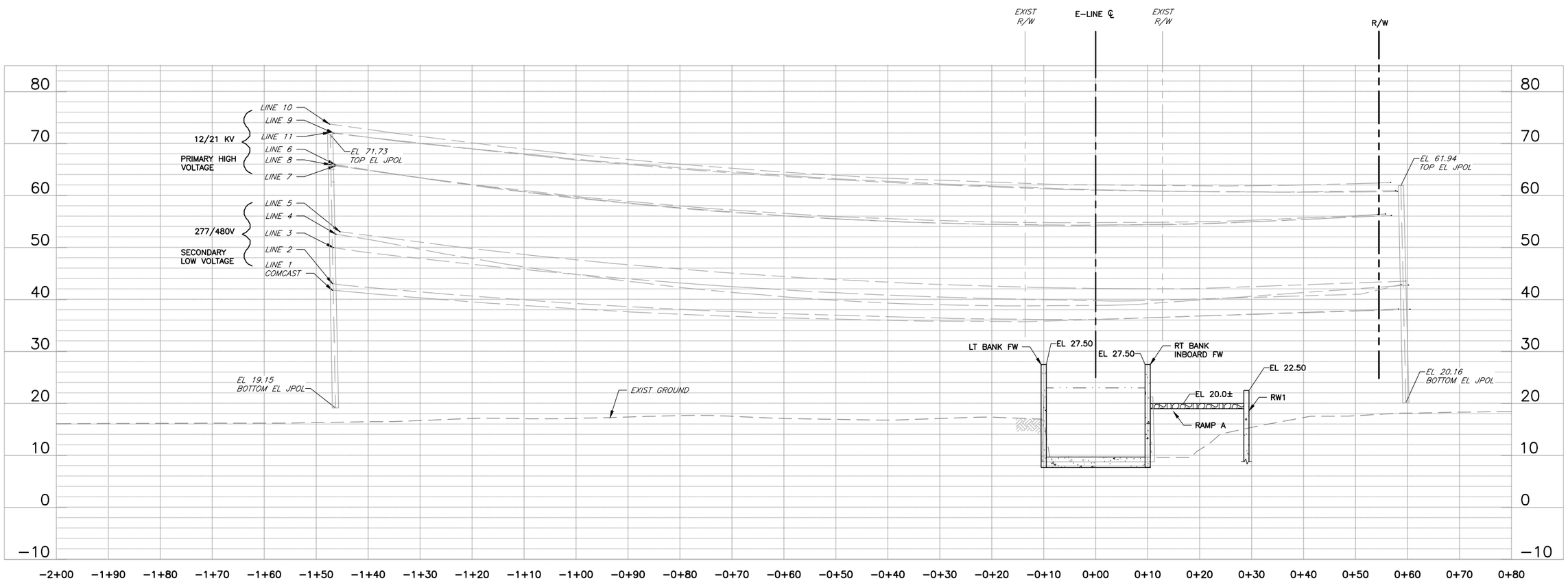

MINIMUM SAFE WORKING DISTANCES	
TYPE	CLEARANCE
SCAFFOLDS, EQUIPMENT, TOOLS, PEOPLE, AND STRUCTURES	6 FEET
BOOM-TYPE LIFTING OR HOISTING EQUIPMENT	10 FEET

SOURCE: PG&E GREENBOOK TABLE 1-2

SECTION A – PROJECTED PG&E POWERLINES
FW21 STA 14+53±
SCALE: 1" = 10'

REV	DESCRIPTION	DATE	APPR

REFERENCE INFORMATION AND NOTES
1. PG&E POWERLINES ARE PROJECTED FROM A DISTANCE ONTO THE SECTION.
2. SECTION IS SHOWN LOOKING UPSTREAM.
3. UTILITY SURVEY WAS DONE IN JANUARY 2018. CONTRACTOR SHALL FIELD VERIFY UTILITY LINE ELEVATIONS PRIOR TO WORKING IN THE AREA.

DATE 12/30/2020
DESIGN Y. LEE
DRAWN J. FORD
CHECKED Y. LEE

ENGINEERING CERTIFICATION
REGISTERED PROFESSIONAL ENGINEER YOUHAN LEE No. C42456 CIVIL STATE OF CALIFORNIA
12.30.2020
PROJECT ENGINEER DATE

SANTA CLARA VALLEY WATER DISTRICT
Valley Water

PROJECT NAME AND SHEET DESCRIPTION:
LOWER CALERA CREEK FLOOD PROTECTION PROJECT
OVERHEAD POWER LINE SECTION FW21-LINE STA 14+53±

SCALE: AS SHOWN
VERIFY SCALES: 0 1"
IF THIS LINE MEASURES ½" ON ORIGINAL DRAWING IT DOES NOT MEASURE ½" ON THIS SHEET, ADJUST SCALES ACCORDINGLY

PROJECT NUMBER: 40174005
SHEET CODE: U-06
SHEET NUMBER: 76 OF 144

USERNAME: Jennford 12/23/2020 4:23 PM
FILENAME: K:\Active Projects\MP-40174005\Lower Calera Creek Project\SHEETS\U-06.dwg
DOCUMENT NUMBER: CAE_CY-U-4018-65981

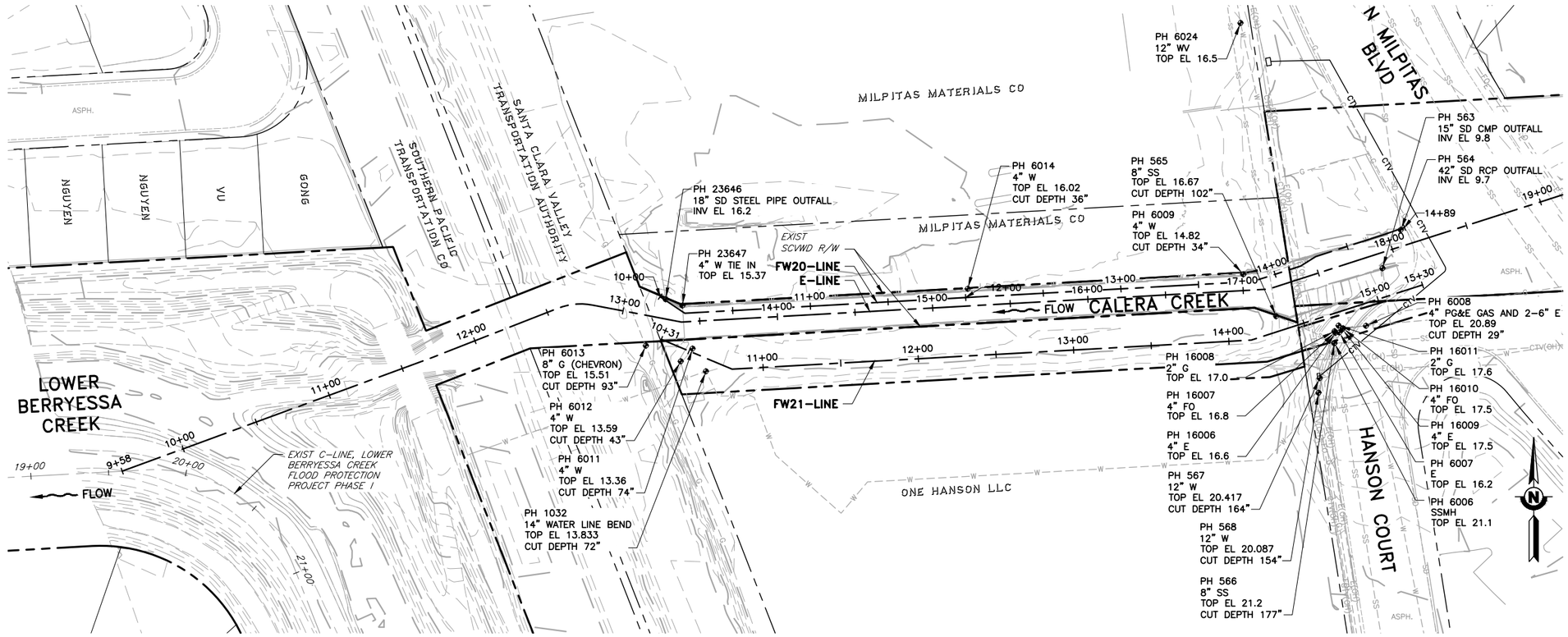

PLAN

SCALE: 1" = 40'

REV	DESCRIPTION	DATE	APPR	REFERENCE INFORMATION AND NOTES

DATE 12/30/2020
DESIGN Y. LEE
DRAWN M. KOST
CHECKED Y. LEE

ENGINEERING CERTIFICATION
REGISTERED PROFESSIONAL ENGINEER YOUHAN LEE No. C42456 CIVIL STATE OF CALIFORNIA
PROJECT ENGINEER 12.30.2020 DATE

SANTA CLARA VALLEY WATER DISTRICT
Valley Water

PROJECT NAME AND SHEET DESCRIPTION:
LOWER CALERA CREEK FLOOD PROTECTION PROJECT
EXISTING POTHOLE LOCATION MAP

SCALE: AS SHOWN
VERIFY SCALES: 0 1" BAR SHOULD MEASURE 1 INCH ON ORIGINAL DRAWING IF NOT 1 INCH ON THIS SHEET, ADJUST SCALES ACCORDINGLY

PROJECT NUMBER: 40174005
SHEET CODE: U-07
SHEET NUMBER: 77 OF 144

DOCUMENT NUMBER: CAE_CY-U-4018-65982

USERNAME: Jennford 12/23/2020 4:23 PM
FILENAME: K:\Active Projects\MP-40174005\Lower Calera Creek Project\SHEETS\U-07.dwg

Attachment 4
Page 77 of 144

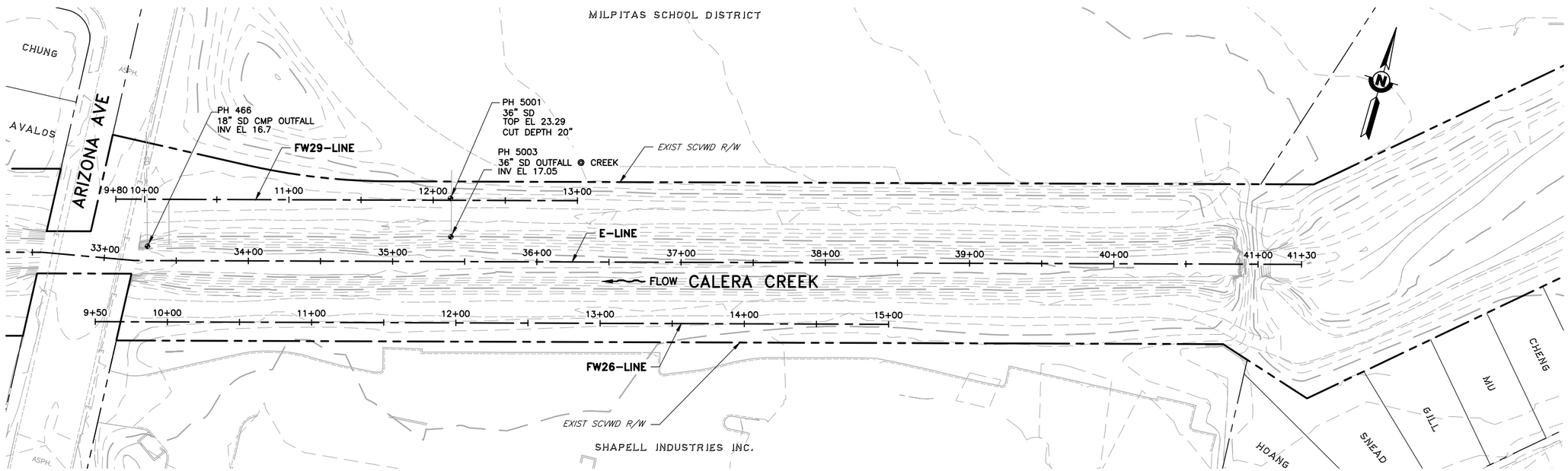

PLAN

SCALE: 1" = 40'

REV	DESCRIPTION	DATE	APPR	REFERENCE INFORMATION AND NOTES	DATE 12/30/2020	ENGINEERING CERTIFICATION	SANTA CLARA VALLEY WATER DISTRICT	PROJECT NAME AND SHEET DESCRIPTION:	SCALE AS SHOWN	PROJECT NUMBER 40174005
	Attachment 4 Page 78 of 144				DESIGN Y. LEE DRAWN M. KOST CHECKED Y. LEE	REGISTERED PROFESSIONAL ENGINEER YOUHAN LEE No. C42456 CIVIL STATE OF CALIFORNIA PROJECT ENGINEER 12.30.2020 DATE	Valley Water	LOWER CALERA CREEK FLOOD PROTECTION PROJECT EXISTING POTHOLE LOCATION MAP	VERIFY SCALES 0 1" BAR IS ONE INCH ON ORIGINAL DRAWING IF NOT ONE INCH ON THIS SHEET, ADJUST SCALES ACCORDINGLY	SHEET CODE: U-08 SHEET NUMBER: 78 OF 144

USERNAME: Jennford 12/23/2020 4:23 PM
FILENAME: K:\Active Projects\MP-40174005\Lower Calera Creek Project\SHEETS\U-08.dwg
DOCUMENT NUMBER: CAE_CY-U-4018-65983

GENERAL NOTES

1. CONTRACTOR SHALL VERIFY ALL FIELD DIMENSIONS AND EXISTING FIELD CONDITIONS BEFORE ORDERING OR FABRICATING ANY MATERIAL.
2. CONTRACTOR SHALL BE SOLELY RESPONSIBLE FOR COMPLYING WITH CURRENT FEDERAL, STATE AND LOCAL SAFETY AND HEALTH STANDARDS AND ORDINANCES.
3. CONTRACTOR SHALL BE RESPONSIBLE TO COORDINATE ALL DIMENSIONS AND DETAILS FROM PLANS BY OTHER TRADES. ANY DISCREPANCY FOUND SHALL BE REPORTED TO THE WATER DISTRICT AND RESOLVED PRIOR TO FURTHER CONSTRUCTION IN RELATION TO THE DISCREPANCY.
4. CONTRACTOR SHALL BE SOLELY RESPONSIBLE FOR TEMPORARY SHORING FOR EXISTING OR NEW CONSTRUCTION, DESIGN & SELECTION OF TEMPORARY SHORING, INSTALLATION, SAFE MAINTENANCE AND REMOVAL AS REQUIRED. ALSO, SHORING AT TRENCHES AND SHORING FOR SLOPE STABILITY SHALL BE THE SOLE RESPONSIBILITY OF THE CONTRACTOR. CONTRACTOR SHALL COMPLY WITH EXCAVATION AND SAFETY REQUIREMENTS BY CAL-OSHA.
5. ALL EXISTING FACILITIES, STRUCTURES, TREES, FENCES, LANDSCAPING, ETC., DESIGNATED "EXIST" OR SHOWN EXISTING (DASHED LINES) ARE TO REMAIN. ONLY THOSE SPECIFICALLY DESIGNATED FOR REMOVAL OR DEMOLITION AS SHOWN ON THE DRAWINGS, OR AS DIRECTED BY THE ENGINEER SHALL BE REMOVED.
6. ALL REFERENCES MADE TO RIGHT OR LEFT AND ALL CROSS SECTIONS SHOWN ON THE PLANS ARE VIEWED LOOKING UPSTREAM/UPSTATION, UNLESS INDICATED OTHERWISE.
7. LOCATIONS AND DEPTHS OF EXISTING UNDERGROUND UTILITIES AS SHOWN ON THE PLANS ARE BASED ON INFORMATION RECEIVED FROM VARIOUS SOURCES AND SHALL BE CONSIDERED AS FOR REFERENCE ONLY.
8. PRIOR TO PERFORMING ANY WORK IN THE VICINITY OF EXISTING UNDERGROUND UTILITIES, THE CONTRACTOR SHALL FIELD VERIFY THEIR LOCATIONS AND DEPTHS AND TAKE PROPER PRECAUTIONS TO AVOID ANY DAMAGE TO THEM.
9. SEE SPECIFICATIONS FOR THE RELEVANT GEOTECHNICAL DATA AND SOIL BORINGS.
10. FOR LIMITS OF PAYMENT OF STRUCTURE EXCAVATION AND BACKFILL WHERE NOT INDICATED FOR RETAINING WALLS/FLOODWALLS, SEE CALTRANS STANDARD PLANS SHEETS A62B.
11. ALL STEEL EMBEDDED ANCHORS AND FASTENERS SHALL BE HOT DIPPED GALVANIZED AFTER FABRICATION, UNLESS NOTED OTHERWISE.
12. CONTRACTOR SHALL COORDINATE ALL CONSTRUCTION AND DETAILS PER THESE PLANS, STANDARD PLANS AND ALL RELEVANT CODES AND ORDINANCES. ANY DETAILS OR ELEMENTS NOT SHOWN SHALL BE CONSTRUCTED SIMILAR TO ITEMS SHOWN, SUBJECT TO APPROVAL BY THE DISTRICT AND SHALL BE CONSIDERED INCLUDED IN THIS CONTRACT. IN SUCH INSTANCES, CONTRACTOR SHALL SUBMIT SHOP DRAWINGS TO BE REVIEWED BY THE DISTRICT.
13. DIMENSIONS ON NOTES AND PLANS SHALL TAKE PRECEDENCE OVER ANY SCALED DIMENSIONS.
14. CONSTRUCT 3/4" CHAMFER ON ALL EXPOSED EDGES OF CONCRETE WALLS AND SLABS.
15. SEE CIVIL AND GENERAL SHEETS FOR ADDITIONAL INFORMATION NOT NOTED ON STRUCTURAL PLANS.
16. CONTRACTOR HAS THE OPTION TO USE CAST-IN-PLACE CONCRETE OR SHOTCRETE FOR THE FLOODWALS. THE DETAILS SHOWN IN THE PLANS ARE FOR THE CIP CONCRETE. IF SHOTCRETE IS USED REFER TO THE SPECIFICATIONS FOR SPECIAL REQUIREMENTS.
17. ALL REINFORCEMENT SPLICES, UNLESS OTHERWISE NOTED, SHALL CONFORM TO THE TABLE BELOW:

MINIMUM SPLICE LENGTH (INCHES)					
BAR SIZE	4	5	6	7	8
TOP BAR	24	30	36	42	51
OTHER BAR	20	24	28	33	42

TOP BAR: HORIZONTAL BAR WITH 12" OF CONCRETE BELOW THE BAR
OTHER BAR: ALL OTHER HORIZONTAL AND VERTICAL BARS

DATUM

NAVD 88
AS-BUILT PLANS: NGVD29
NAVD 88 = NGVD29 + 2.76'

DESIGN DATA
RETAINING WALLS, FLOODWALLS

DESIGN MANUALS: BASED ON THE GUIDELINES FROM THE FOLLOWING US ARMY CORPS OF ENGINEERS MANUALS:

A. ENGINEERING MANUAL 1110-2-2104 STRENGTH DESIGN FOR REINFORCED CONCRETE HYDRAULIC STRUCTURES, NOVEMBER 2016
   - FOLLOW DESIGN GUIDELINES FOR REINFORCED CONCRETE LOAD CASES AND LOAD FACTORS

B. ENGINEERING MANUAL 1110-2-2100, STABILITY ANALYSYS OF CONCRETE STRUCTURES, DECEMBER 2005
   - FOLLOW DESIGN GUIDELINES FOR SLIDING AND OVERTURNING

LOAD CASES:

	LOAD COMBINATIONS:
CASE 1: DESIGN FLOOD LOADING	1.6(D + EH + EV + Hs)
CASE 2: CRITICAL FLOOD STATE	1.2D + 1.5EH + 1.35EV + 1.3Hs
CASE 3: EARTHQUAKE LOADING	1.0(D + EH + EV +EQ)
CASE 4: CONSTRUCTION LOADING	1.6(D + EH + EV + ES)

D = DEAD LOADS
EH = HORIZONTAL EARTH LOADS
EV = VERTICAL EARTH LOADS
Hs = HYDROSTATIC LOADING
EQ = EARTHQUAKE LOADING
ES = LATERAL SURCHARGE LOADING

SOIL PROPERTIES: γ = 125 pcf
Ka = 45 pcf ACTIVE (ABOVE G.W.)
Ka = 85 pcf ACTIVE (BELOW G.W.)
Kp = 345 pcf PASSIVE (ABOVE G.W.)
Kp = 235 pcf PASSIVE (BELOW G.W.)

LIVE LOAD SURCHARGE: USE 250 psf APPLIED VERTICALLY
ES = 0.33(250) = 83.3 psf APPLIED HORIZONTALLY

SEISMIC: As = 0.43g
Kh = 0.33 As = 0.33(0.43g) = 0.143g

EQUIVALENT FLUID PRESSURE OF 13 pcf APPLIED AS A TRIANGULAR SHAPE FOR FLEXIBLE WALLS (RESULTANT APPLIED AT 1/3 THE WALL HEIGHT FROM THE BOTTOM)

REINFORCED CONCRETE: f'c = 4,500 psi
fy = 60,000 psi

CONCRETE DESIGN: PER CHAPTER 4 & 5 OF EM 1110-2-2104, NOV 2016

DETAIL AND SECTION DESIGNATION

* IF SECTION OR DETAIL APPEARS ON THE SAME DRAWING AS THE CALLOUT, THE DRAWING REFERENCE IS REPLACED WITH A DASH (-)

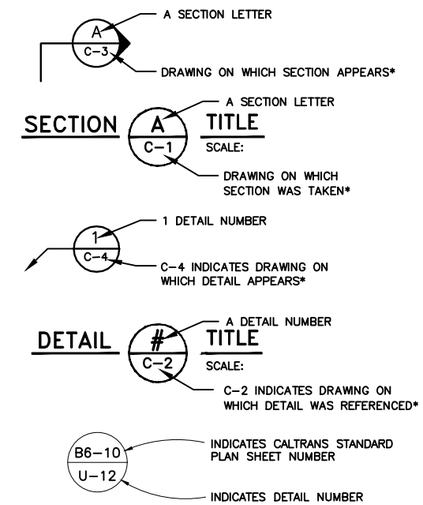

INDEX TO CALTRANS STANDARD PLANS (2018)

A10A	ACRONYMS AND ABBREVIATIONS (SHEET 1 OF 2)
A10B	ACRONYMS AND ABBREVIATIONS (SHEET 2 OF 2)
A62B	LIMITS OF PAYMENT FOR EXCAVATION AND BACKFILL – BRIDGE SURCHARGE AND WALL
B6-21	JOINT SEALS (Max MOVEMENT RATING = 2")

INDEX TO PLANS

S-01	GENERAL NOTES & STRUCTURAL INFORMATION
S-02	LT BANK FLOODWALL NO. 1 GENERAL PLAN NO. 1
S-03	LT BANK FLOODWALL NO. 1 GENERAL PLAN NO. 2
S-04	RT BANK INBOARD FLOODWALL NO. 2 GENERAL PLAN NO. 1
S-05	RT BANK INBOARD FLOODWALL NO. 2 GENERAL PLAN NO. 2
S-06	RT BANK OUTBOARD FLOODWALL NO. 3 GENERAL PLAN NO. 1
S-07	RT BANK OUTBOARD FLOODWALL NO. 3 GENERAL PLAN NO. 2
S-08	RT BANK RAMP CURB GENERAL PLAN
S-09	RETAINING WALL NO. 1 GENERAL PLAN
S-10	FLOODWALL SECTIONS
S-11	FLOODWALL TYPE A & C DETAILS
S-12	FLOODWALL TYPE B DETAILS
S-13	FLOODWALL TYPE D DETAILS
S-14	FLOODWALL DETAILS NO. 1
S-15	FLOODWALL DETAILS NO. 2
S-16	FLOODWALL DETAILS NO. 3
S-17	CHAIN LINK RAILING

REV	DESCRIPTION	DATE	APPR	REFERENCE INFORMATION AND NOTES

MARK THOMAS
2833 NORTH JUNCTION AVE, SUITE 110
SAN JOSE, CA 95134

DATE 12/08/2020
DESIGN M. BIANUCCI
DRAWN G. BOYKO
CHECKED J. HICKEY

ENGINEERING CERTIFICATION
REGISTERED PROFESSIONAL ENGINEER MARK BIANUCCI No. 52085 CIVIL STATE OF CALIFORNIA
PROJECT ENGINEER 12/08/2020 DATE

SANTA CLARA VALLEY WATER DISTRICT
Valley Water
PROJECT ENGINEER ACCEPTED BY DISTRICT 12/30/2020 DATE

PROJECT NAME AND SHEET DESCRIPTION:
LOWER CALERA CREEK
FLOOD PROTECTION PROJECT
GENERAL NOTES, STRUCTURAL INFORMATION

SCALE: AS SHOWN
VERIFY SCALES: 0 1" IF NOT ONE INCH ON ORIGINAL DRAWING IF NOT ONE INCH ON THIS SHEET, ADJUST SCALES ACCORDINGLY
PROJECT NUMBER: 40174005
SHEET CODE: S-01
SHEET NUMBER: 79 OF 144

USERNAME: Nfelde 12/17/2020 4:10 PM
FILENAME: J:\SCVWD-SA-17167-Lower Calera Crk Flood Protection\CADD\Structures\S1-S9.DWG
DOCUMENT NUMBER: CAE_CY-S-4018-65984

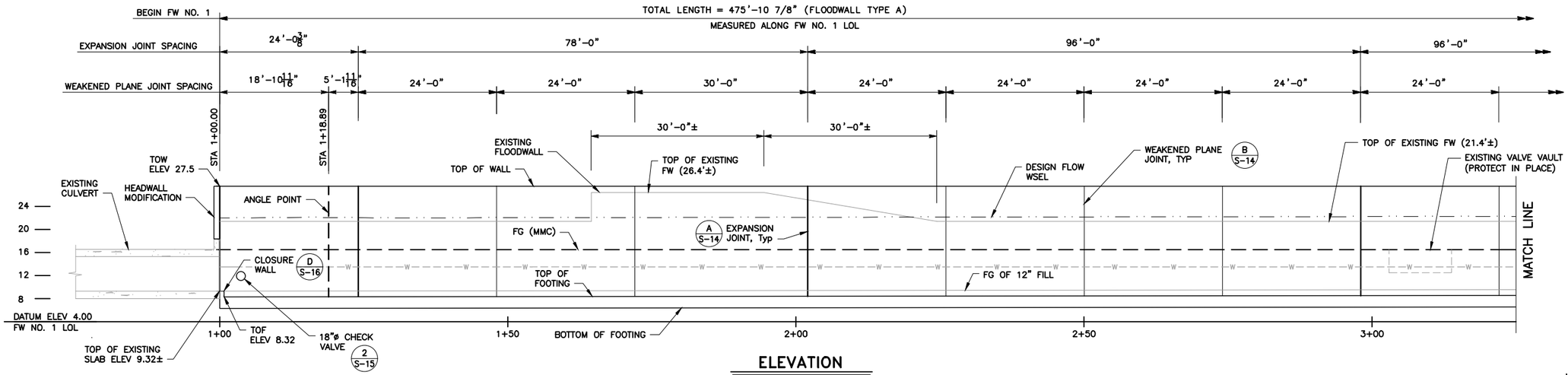

ELEVATION

SCALE: 1" = 10'

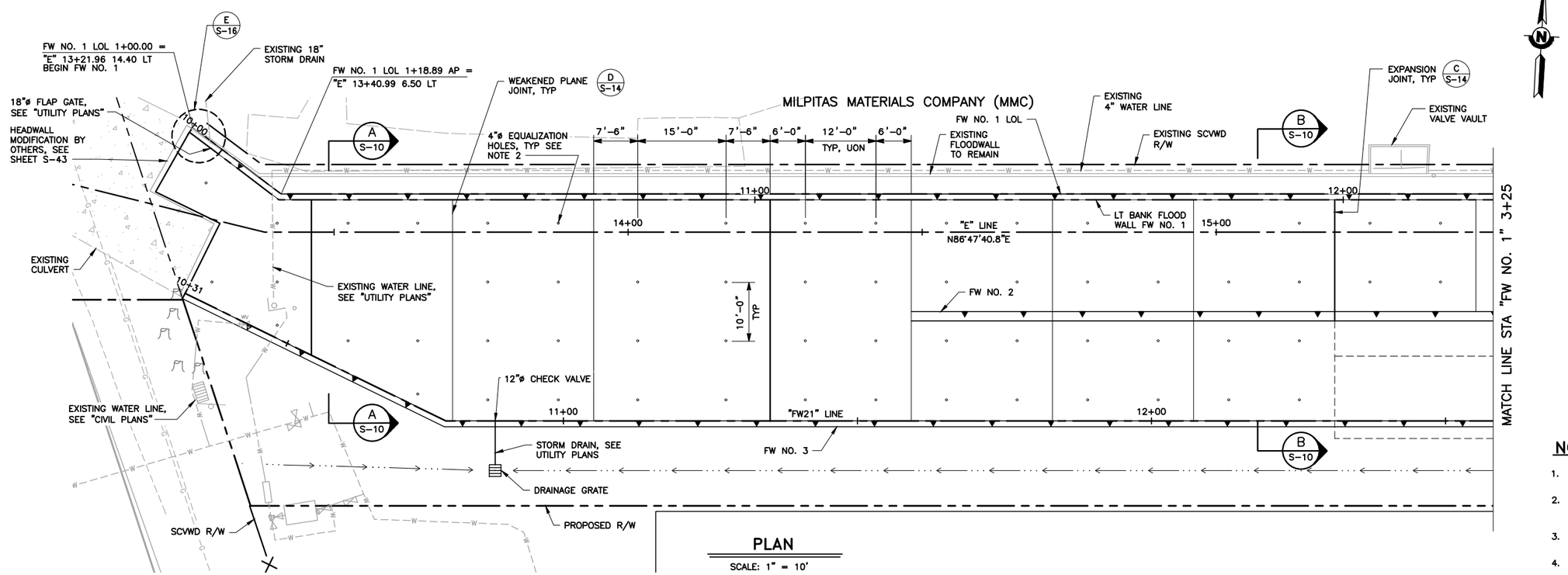

PLAN

SCALE: 1" = 10'

NOTES:

1. BOTTOM SLAB SHALL BE PLACED ON A CONSTANT SLOPE FROM CULVERT TO CULVERT.
2. 4"ø EQUALIZATION HOLES TO BE SPACED AT 12' LONGITUDINALLY AND 10' TRANSVERSELY, UON.
3. UTILITY LINES SHOWN FOR REFERENCE ONLY, SEE "UTILITY PLANS" FOR SPECIFICS.
4. SEE SHEET S-16 FOR REBAR LAYOUT AT BEGINNING OF FLOODWALL SLAB.
5. EXPANSION JOINTS AND WEAKENED PLANE JOINTS IN SLAB SHALL ALIGN WITH THE SAME IN THE WALLS.

REV	DESCRIPTION	DATE	APPR	REFERENCE INFORMATION AND NOTES
	Attachment 4 Page 80 of 144			

MARK THOMAS
2833 NORTH JUNCTION AVE, SUITE 110
SAN JOSE, CA 95134

DATE 12/08/2020
DESIGN M. BIANUCCI
DRAWN G. BOYKO
CHECKED J. HICKEY

ENGINEERING CERTIFICATION
REGISTERED PROFESSIONAL ENGINEER MARK BIANUCCI No. 52085 CIVIL STATE OF CALIFORNIA
12/08/2020
PROJECT ENGINEER DATE

SANTA CLARA VALLEY WATER DISTRICT
Valley Water
PROJECT ENGINEER ACCEPTED BY DISTRICT 12/30/2020 DATE

PROJECT NAME AND SHEET DESCRIPTION:
LOWER CALERA CREEK FLOOD PROTECTION PROJECT
LT BANK FLOODWALL FW NO. 1 GENERAL PLAN NO. 1

SCALE: AS SHOWN
VERIFY SCALES: 0 1" FOR ONE INCH ON ORIGINAL DRAWING IF NOT ONE INCH ON THIS SHEET, ADJUST SCALES ACCORDINGLY
PROJECT NUMBER: 40174005
SHEET CODE: S-02
SHEET NUMBER: 80 OF 144

USERNAME: Nfelde 12/17/2020 4:11 PM
FILENAME: J:\SCVWD-SA-17167-Lower Calera Crk Flood Protection\CADD\Structures\S1-S9.DWG
DOCUMENT NUMBER: CAE_CY-S-4018-65985

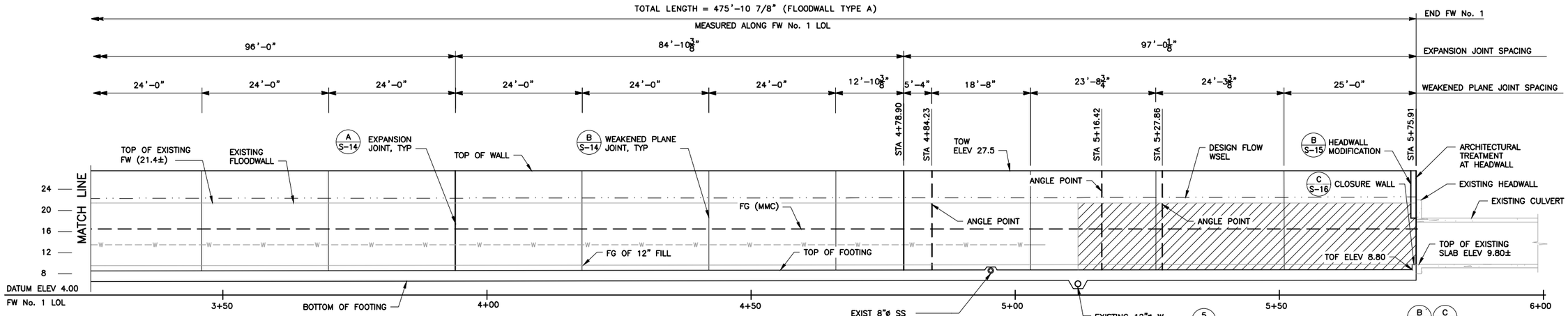

ELEVATION

SCALE: 1" = 10'

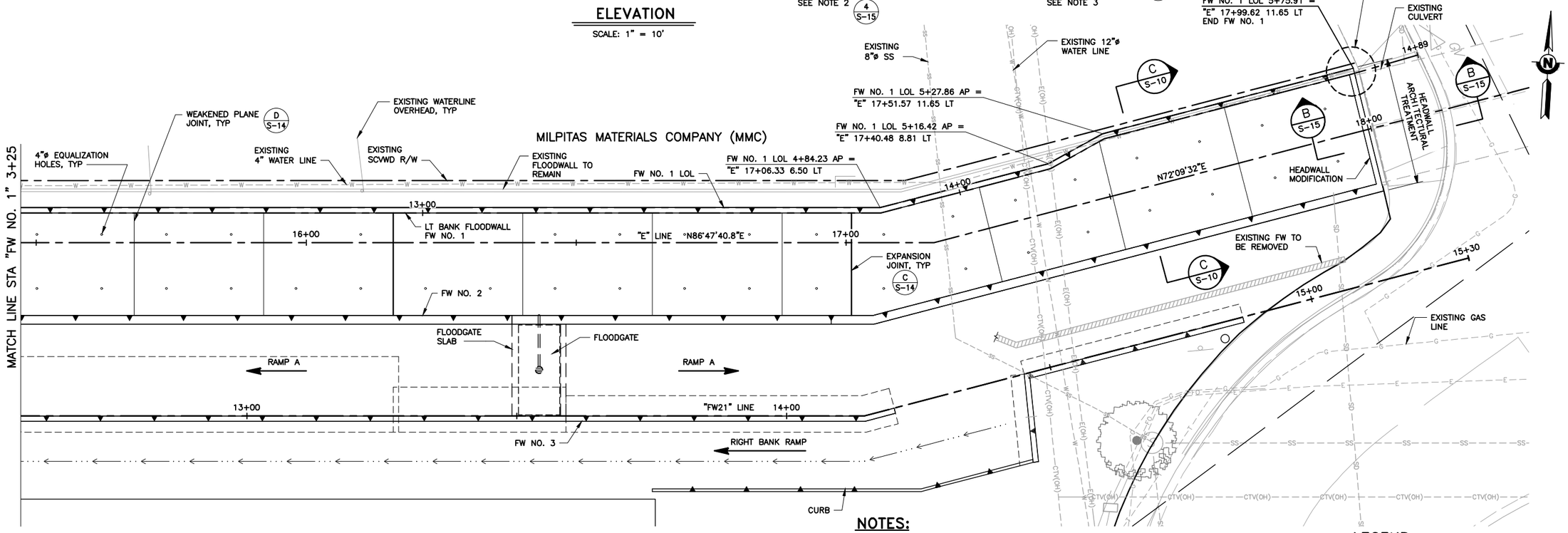

PLAN

SCALE: 1" = 10'

NOTES:

1. UTILITY LINES SHOWN FOR REFERENCE ONLY, SEE "UTILITY PLANS" FOR SPECIFICS.
2. USE 12" ID SPLIT STAINLESS STEEL PIPE CASING. CASING TO EXTEND 12" BEYOND FOOTING EDGE.
3. USE 14" ID SPLIT STAINLESS STEEL PIPE CASING. CASING TO EXTEND 12" BEYOND FOOTING EDGE.
4. SEE SHEET S-16 FOR REBAR LAYOUT IN SLAB AT ANGLE POINT.
5. REFER TO SHEET C-26 FOR ARCHITECTURAL TEXTURE DETAILS.

LEGEND:

REMOVE FLOODWALL CONCRETE

REV	DESCRIPTION	DATE	APPR	REFERENCE INFORMATION AND NOTES

MARK THOMAS
2833 NORTH JUNCTION AVE, SUITE 110
SAN JOSE, CA 95134

DATE 12/08/2020
DESIGN M. BIANUCCI
DRAWN G. BOYKO
CHECKED J. HICKEY

ENGINEERING CERTIFICATION
REGISTERED PROFESSIONAL ENGINEER M. BIANUCCI No. 52085 CIVIL STATE OF CALIFORNIA
12/08/2020
PROJECT ENGINEER DATE

SANTA CLARA VALLEY WATER DISTRICT
Valley Water
12/30/2020
PROJECT ENGINEER ACCEPTED BY DISTRICT DATE

PROJECT NAME AND SHEET DESCRIPTION:
LOWER CALERA CREEK FLOOD PROTECTION PROJECT
LT BANK FLOODWALL FW NO. 1 GENERAL PLAN NO. 2

SCALE: AS SHOWN
VERIFY SCALES: 0 1" — IF NOT ONE INCH ON ORIGINAL DRAWING IF NOT ONE INCH ON THIS SHEET, ADJUST SCALES ACCORDINGLY
PROJECT NUMBER: 40174005
SHEET CODE: S-03
SHEET NUMBER: 81 OF 144

DOCUMENT NUMBER: CAE_CY-S-4018-65986

USERNAME: Nfelde 12/17/2020 4:16 PM
FILENAME: J:\SCVWD-SA-17167-Lower Calera Crk Flood Protection\CADD\Structures\S1-S9.DWG

Attachment 4
Page 81 of 144

NOTES:

1. TOP OF WALL PROFILES ARE LINEAR BETWEEN CALL OUTS.
2. UTILITY LINES SHOWN FOR REFERENCE ONLY, SEE "UTILITY PLANS" FOR SPECIFICS.

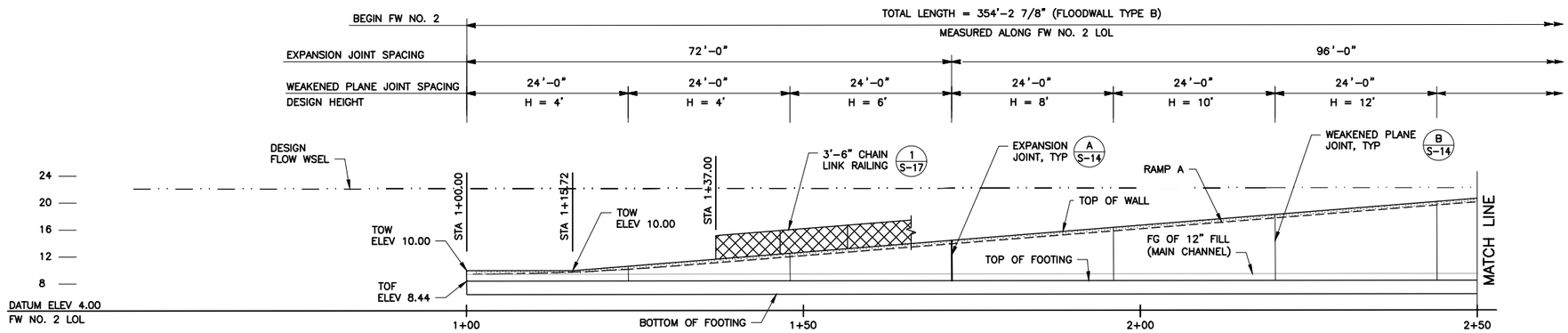

MIRRORED ELEVATION

SCALE: 1" = 10'

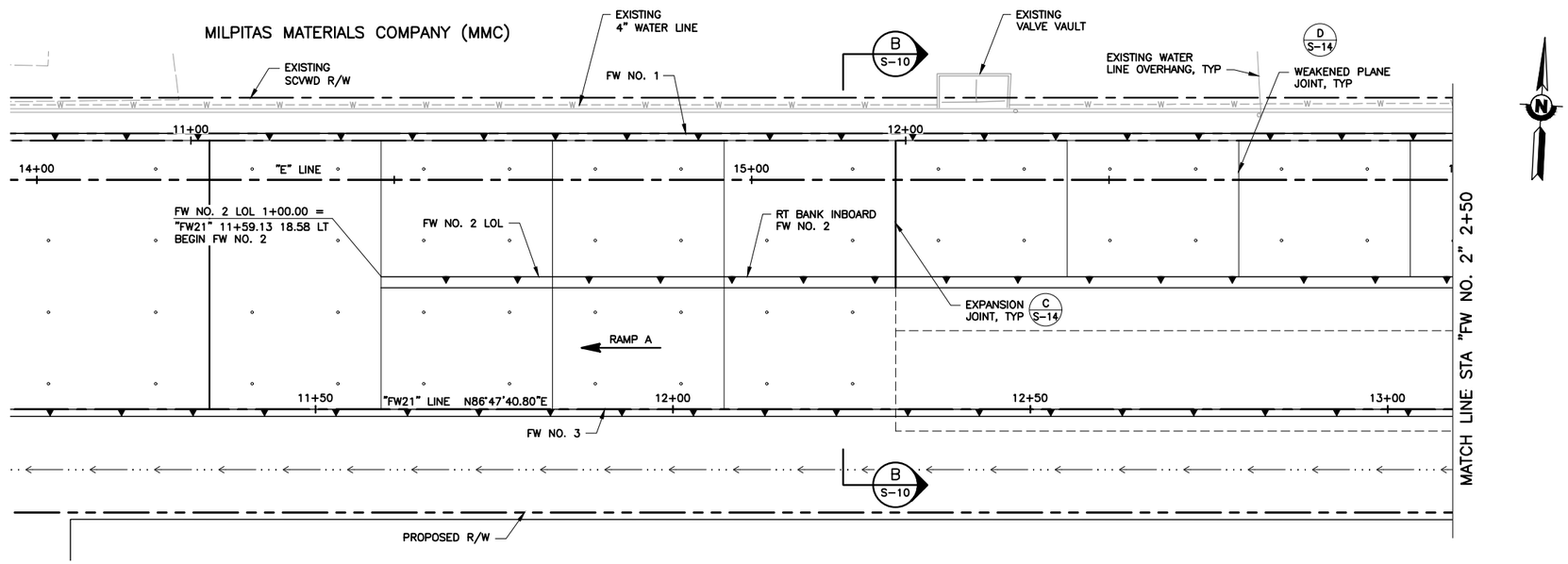

PLAN

SCALE: 1" = 10'

USERNAME: Nfelde 12/17/2020 4:17 PM
FILENAME: J:\SCVWD-SA-17167-Lower Calera Crk Flood Protection\CADD\Structures\S1-S9.DWG

DOCUMENT NUMBER: CAE_CY-S-4018-65987

REV	DESCRIPTION	DATE	APPR	REFERENCE INFORMATION AND NOTES
	Attachment 4 Page 82 of 144			

MARK THOMAS
2833 NORTH JUNCTION AVE, SUITE 110
SAN JOSE, CA 95134

DATE 12/08/2020
DESIGN M. BIANUCCI
DRAWN G. BOYKO
CHECKED J. HICKEY

ENGINEERING CERTIFICATION
REGISTERED PROFESSIONAL ENGINEER M. BIANUCCI No. 52085 CIVIL STATE OF CALIFORNIA
12/08/2020
PROJECT ENGINEER DATE

SANTA CLARA VALLEY WATER DISTRICT
Valley Water
12/30/2020
PROJECT ENGINEER ACCEPTED BY DISTRICT DATE

PROJECT NAME AND SHEET DESCRIPTION:
LOWER CALERA CREEK FLOOD PROTECTION PROJECT
RT BANK INBOARD FLOODWALL FW NO. 2
GENERAL PLAN NO. 1

SCALE: AS SHOWN
VERIFY SCALES: 0 1"
IF NOT ONE INCH ON ORIGINAL DRAWING IF NOT ONE INCH ON THIS SHEET, ADJUST SCALES ACCORDINGLY

PROJECT NUMBER: 40174005
SHEET CODE: S-04
SHEET NUMBER: 82 OF 144

Attachment 4
Page 82 of 144

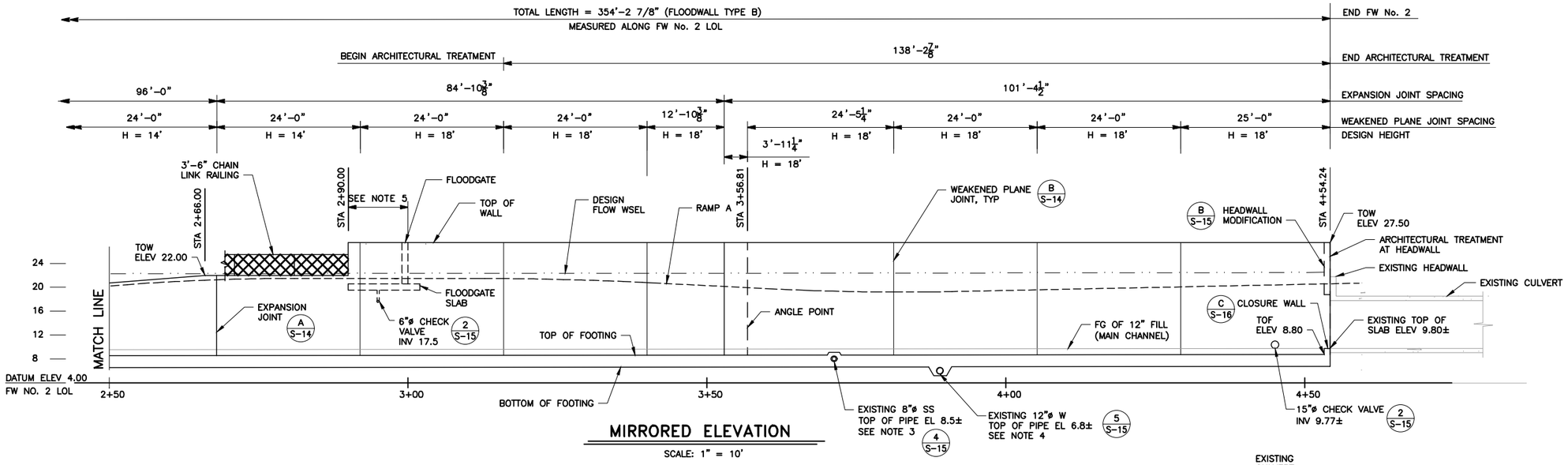

MIRRORED ELEVATION

SCALE: 1" = 10'

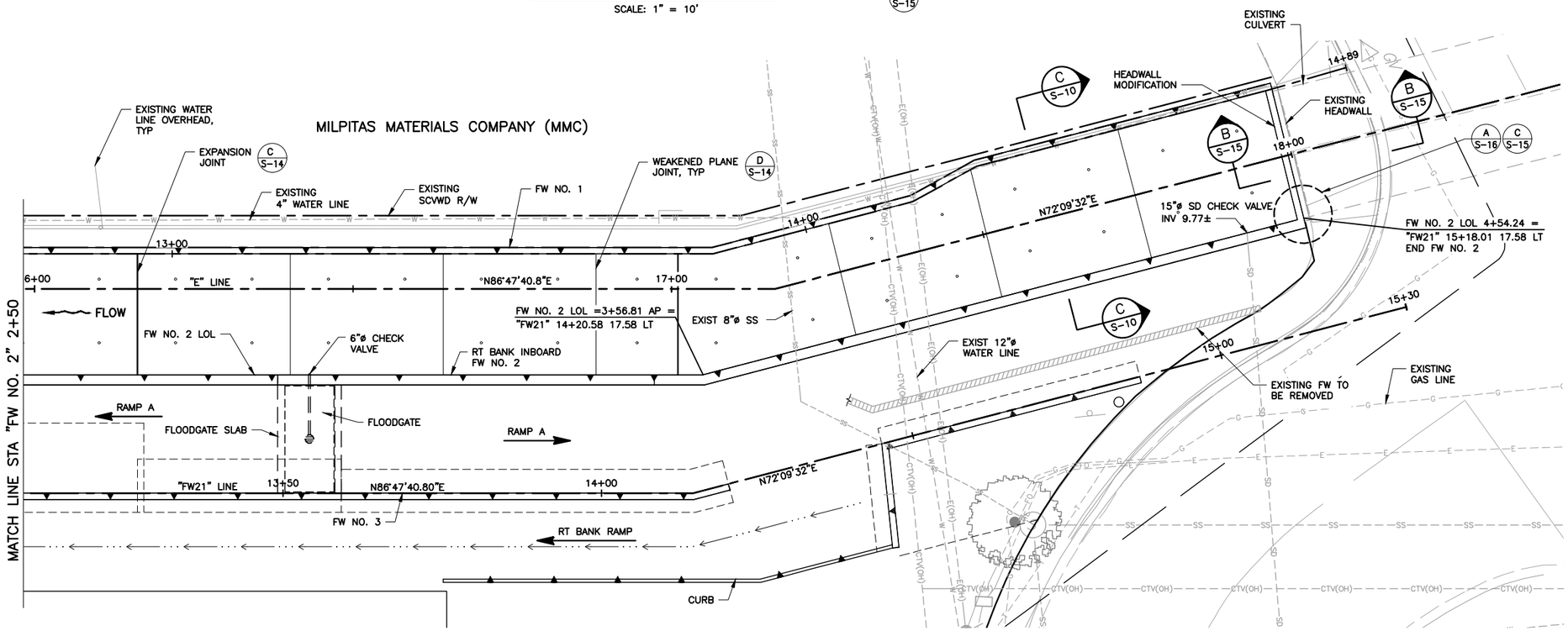

PLAN

SCALE: 1" = 10'

NOTES:

1. SEE SHEET S-12 FOR ARCHITECTURAL TREATMENT LAYOUT. FOR ARCHITECTURAL TREATMENT DETAILS SEE CIVIL SHEETS.
2. UTILITY LINES SHOWN FOR REFERENCE ONLY, SEE "UTILITY PLANS" FOR SPECIFICS.
3. USE 12" ID SPLIT STAINLESS STEEL PIPE CASING. CASING TO EXTEND 12" BEYOND FOOTING EDGE.
4. USE 14" ID SPLIT STAINLESS STEEL PIPE CASING. CASING TO EXTEND 12" BEYOND FOOTING EDGE.
5. SEE SHEET S-16 FOR REBAR LAYOUT IN SLAB AT ANGLE POINT.
6. WALL SURFACE AT FLOODGATE MUST MEET MANUFACTURER SPECIFICATIONS OF THE WIPER WALL.

REV	DESCRIPTION	DATE	APPR	REFERENCE INFORMATION AND NOTES

MARK THOMAS
2833 NORTH JUNCTION AVE, SUITE 110
SAN JOSE, CA 95134

DATE 12/08/2020
DESIGN M. BIANUCCI
DRAWN G. BOYKO
CHECKED J. HICKEY

ENGINEERING CERTIFICATION
REGISTERED PROFESSIONAL ENGINEER MARK BIANUCCI No. 52085 CIVIL STATE OF CALIFORNIA
PROJECT ENGINEER 12/08/2020 DATE

SANTA CLARA VALLEY WATER DISTRICT
Valley Water
PROJECT ENGINEER ACCEPTED BY DISTRICT 12/30/2020 DATE

PROJECT NAME AND SHEET DESCRIPTION:
LOWER CALERA CREEK FLOOD PROTECTION PROJECT
RT BANK INBOUND FLOODWALL FW NO. 2 GENERAL PLAN NO. 2

SCALE: AS SHOWN
VERIFY SCALES: 0 1" — IF NOT ONE INCH ON ORIGINAL DRAWING IF NOT ONE INCH ON THIS SHEET, ADJUST SCALES ACCORDINGLY
PROJECT NUMBER: 40174005
SHEET CODE: S-05
SHEET NUMBER: 83 OF 144

DOCUMENT NUMBER: CAE_CY-S-4018-65988

USERNAME: Nfelde 12/17/2020 4:18 PM
FILENAME: J:\SCVWD-SA-17167-Lower Calera Crk Flood Protection\CADD\Structures\S1-S9.DWG

Attachment 4
Page 83 of 144

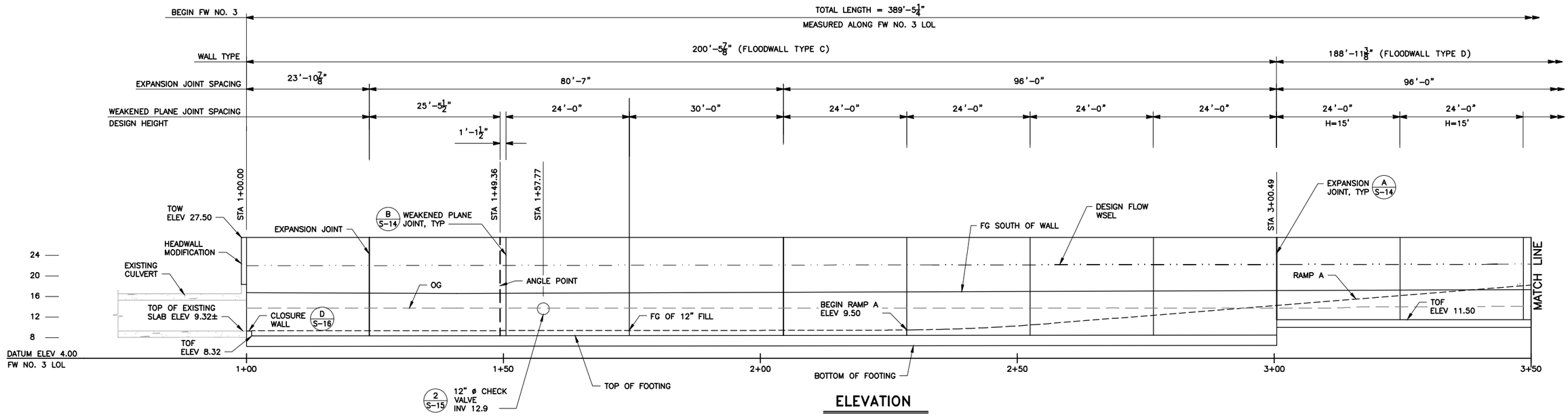

ELEVATION

SCALE: 1" = 10'

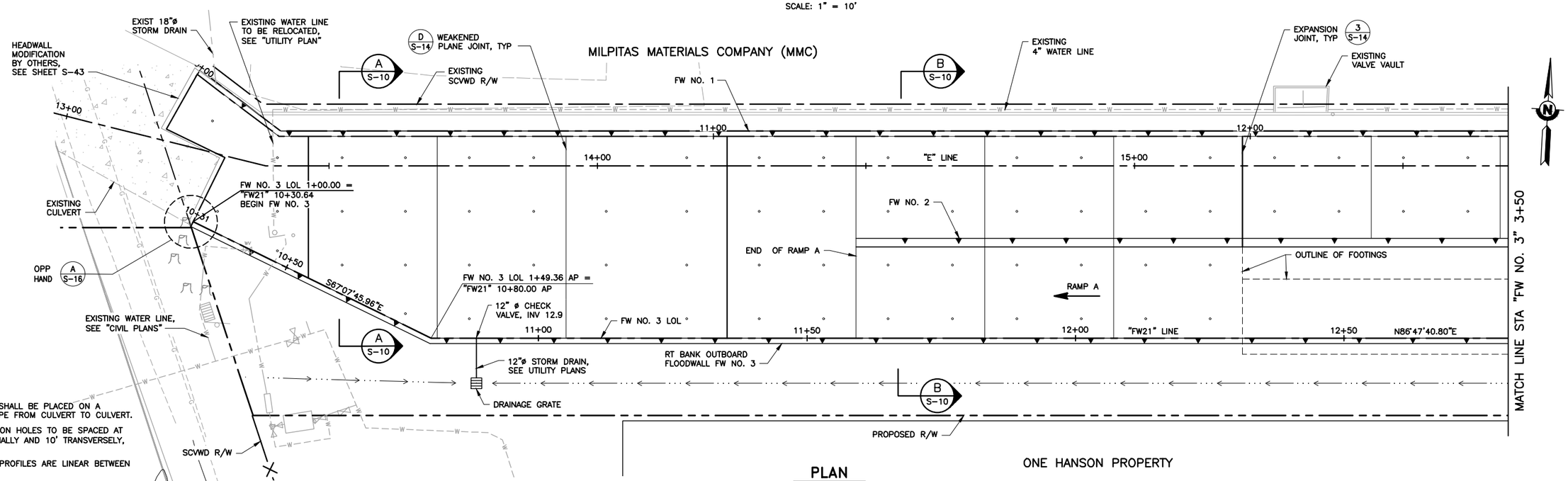

PLAN

SCALE: 1" = 10'

NOTES:

1. BOTTOM SLAB SHALL BE PLACED ON A CONSTANT SLOPE FROM CULVERT TO CULVERT.
2. 4"ø EQUALIZATION HOLES TO BE SPACED AT 12' LONGITUDINALLY AND 10' TRANSVERSELY, UON.
3. TOP OF WALL PROFILES ARE LINEAR BETWEEN CALL OUTS.
4. UTILITY LINES SHOWN FOR REFERENCE ONLY, SEE "UTILITY PLANS" FOR SPECIFICS.

REV	DESCRIPTION	DATE	APPR	REFERENCE INFORMATION AND NOTES

MARK THOMAS
2833 NORTH JUNCTION AVE, SUITE 110
SAN JOSE, CA 95134

DATE 12/08/2020
DESIGN M. BIANUCCI
DRAWN G. BOYKO
CHECKED J. HICKEY

ENGINEERING CERTIFICATION
REGISTERED PROFESSIONAL ENGINEER MARK BIANUCCI No. 52085 CIVIL STATE OF CALIFORNIA
12/08/2020
PROJECT ENGINEER DATE

SANTA CLARA VALLEY WATER DISTRICT
Valley Water
12/30/2020
PROJECT ENGINEER ACCEPTED BY DISTRICT DATE

PROJECT NAME AND SHEET DESCRIPTION:
LOWER CALERA CREEK FLOOD PROTECTION PROJECT
RT BANK OUTBOARD FLOODWALL FW NO. 3
GENERAL PLAN NO. 1

SCALE: AS SHOWN
VERIFY SCALES: 0 1"
IF NOT ONE INCH ON ORIGINAL DRAWING IF NOT ONE INCH ON THIS SHEET, ADJUST SCALES ACCORDINGLY

PROJECT NUMBER: 40174005
SHEET CODE: S-06
SHEET NUMBER: 84 OF 144

DOCUMENT NUMBER: CAE_CY-S-4018-65989

USERNAME: Nfelde 12/17/2020 4:18 PM
FILENAME: J:\SCVWD-SA-17167-Lower Calera Crk Flood Protection\CADD\Structures\S1-S9.DWG

Attachment 4
Page 84 of 144

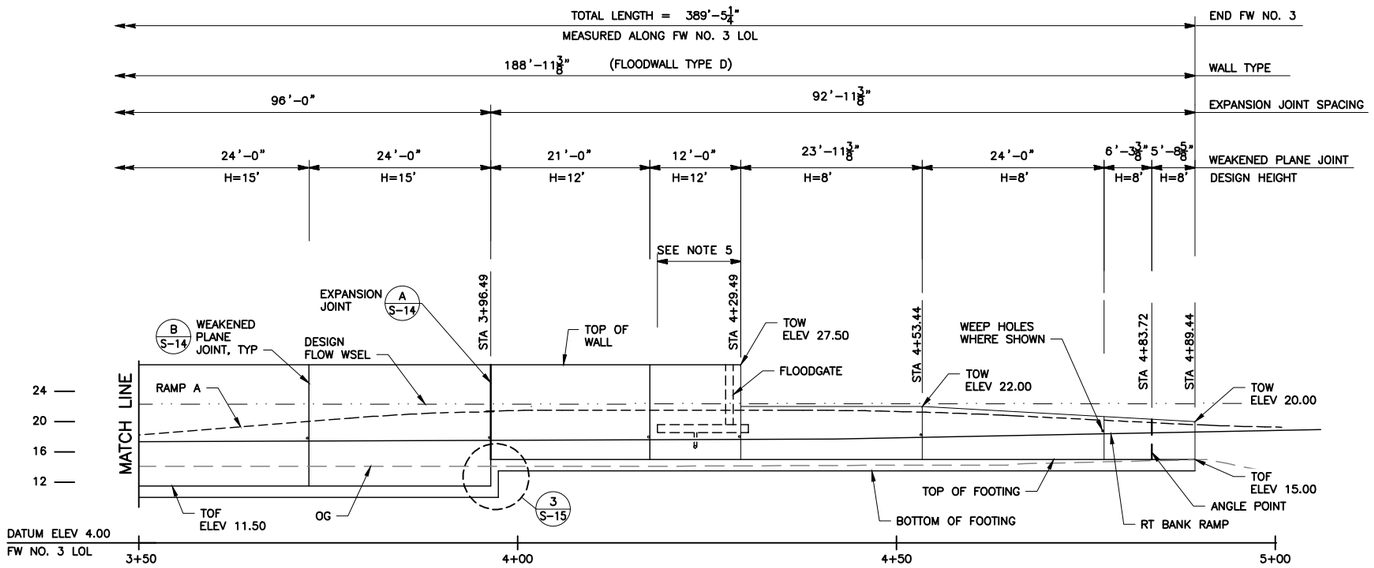

ELEVATION

SCALE: 1" = 10'

NOTES:

1. PLACE PERMEABLE MATERIAL BEHIND WALL FROM STATION 3+36 TO 4+84
2. FOOTINGS ARE LEVEL FOR FLOODWALL TYPE D.
3. TOP OF WALL PROFILES ARE LINEAR BETWEEN CALL OUTS.
4. UTILITY LINES SHOWN FOR REFERENCE ONLY, SEE "UTILITY PLANS" FOR SPECIFICS.
5. WALL SURFACE AT FLOODGATE MUST MEET MANUFACTURER SPECIFICATIONS OF THE WIPER WALL.

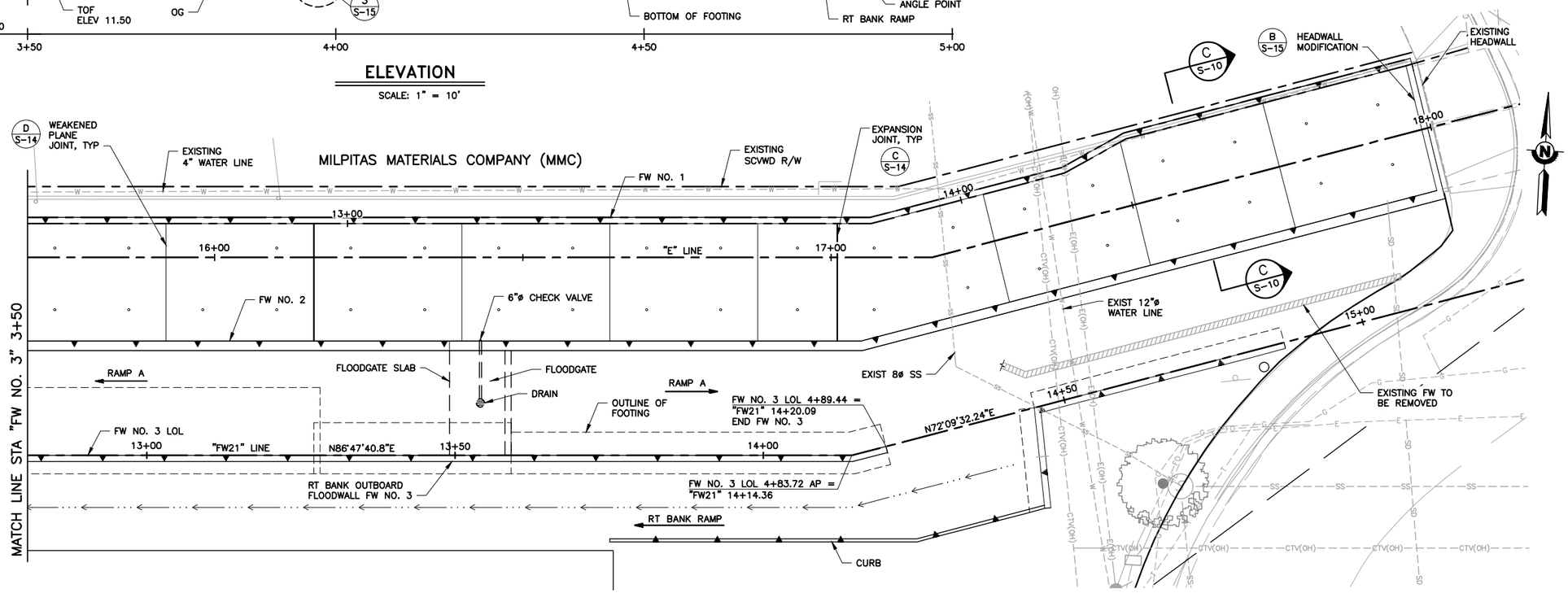

PLAN

SCALE: 1" = 10'

USERNAME: Nfelde 12/17/2020 4:18 PM
FILENAME: J:\SCVWD-SA-17167-Lower Calera Crk Flood Protection\CADD\Structures\S1-S9.DWG

DOCUMENT NUMBER: CAE_CY-S-4018-65990

REV	DESCRIPTION	DATE	APPR	REFERENCE INFORMATION AND NOTES

Attachment 4
Page 85 of 144

MARK THOMAS
2833 NORTH JUNCTION AVE, SUITE 110
SAN JOSE, CA 95134

DATE 12/08/2020
DESIGN M. BIANUCCI
DRAWN G. BOYKO
CHECKED J. HICKEY

ENGINEERING CERTIFICATION
REGISTERED PROFESSIONAL ENGINEER M. BIANUCCI No. 52085 CIVIL STATE OF CALIFORNIA
12/08/2020
PROJECT ENGINEER DATE

SANTA CLARA VALLEY WATER DISTRICT
Valley Water
12/30/2020
PROJECT ENGINEER ACCEPTED BY DISTRICT DATE

PROJECT NAME AND SHEET DESCRIPTION:
LOWER CALERA CREEK
FLOOD PROTECTION PROJECT
RT BANK OUTBOARD FLOODWALL FW NO. 3
GENERAL PLAN NO. 2

SCALE: AS SHOWN
VERIFY SCALES: 0 1" — IF NOT ONE INCH ON ORIGINAL DRAWING IF NOT ONE INCH ON THIS SHEET, ADJUST SCALES ACCORDINGLY

PROJECT NUMBER: 40174005
SHEET CODE: S-07
SHEET NUMBER: 85 OF 144

Attachment 4
Page 85 of 144

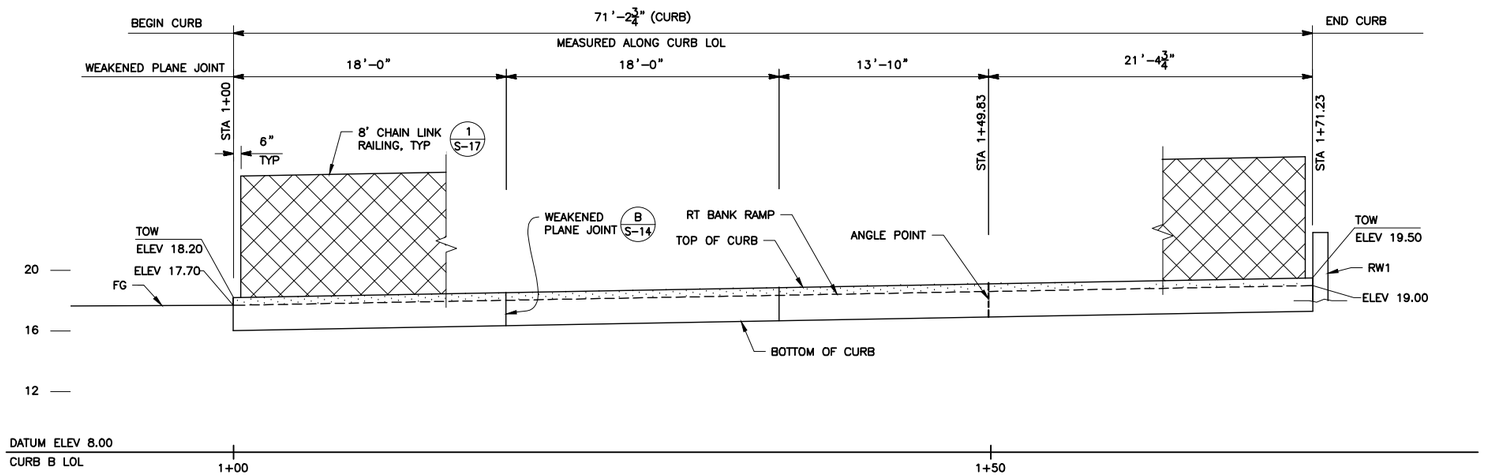

DEVELOPED ELEVATION

SCALE: 1" = 5'

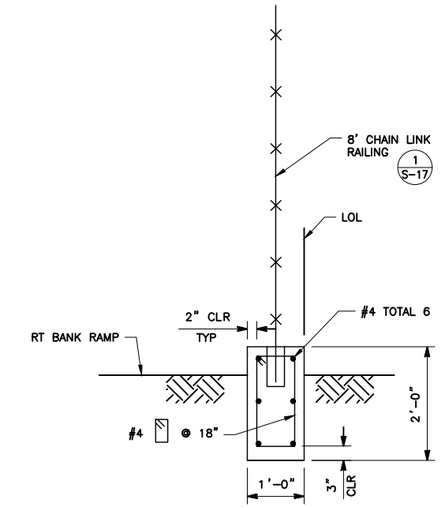

SECTION A CURB

SCALE: 3/4" = 1'-0"

NOTES:

1. TOP OF WALL PROFILES ARE LINEAR BETWEEN CALL OUTS.
2. UTILITY LINES SHOWN FOR REFERENCE ONLY, SEE "UTILITY PLANS" FOR SPECIFICS.

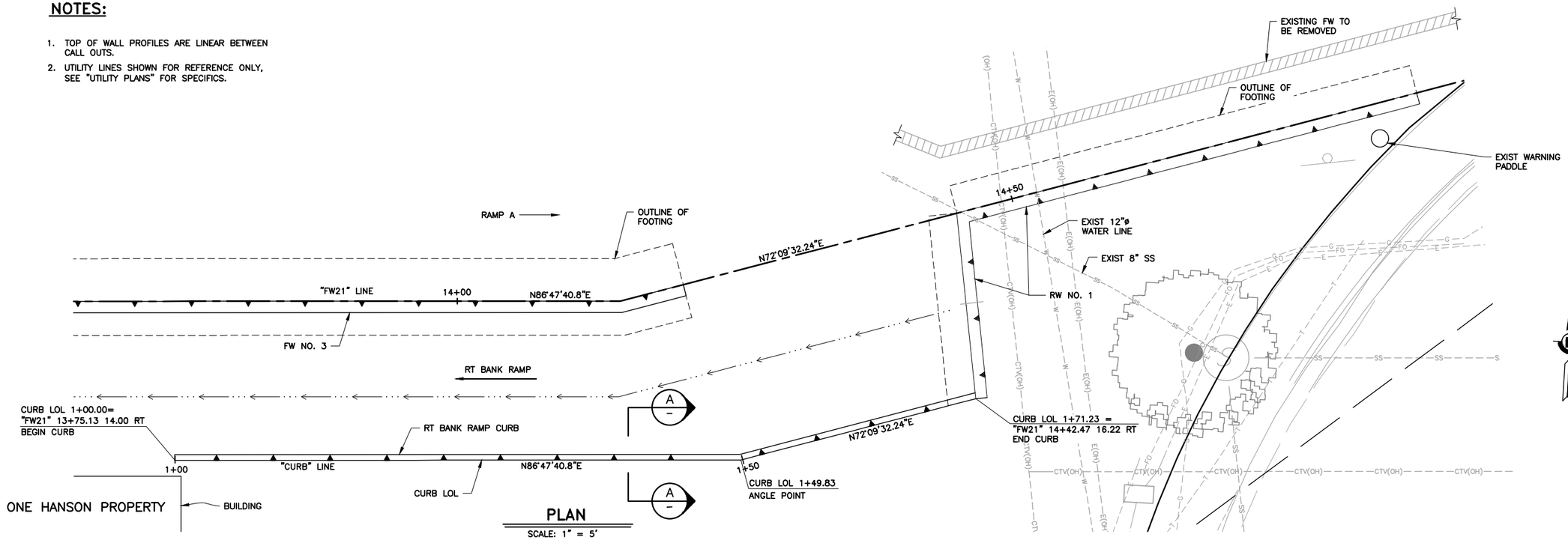

PLAN

SCALE: 1" = 5'

REV	DESCRIPTION	DATE	APPR	REFERENCE INFORMATION AND NOTES
	Attachment 4 Page 86 of 144			

MARK THOMAS
2833 NORTH JUNCTION AVE, SUITE 110
SAN JOSE, CA 95134

DATE 12/08/2020
DESIGN M. BIANUCCI
DRAWN G. BOYKO
CHECKED J. HICKEY

ENGINEERING CERTIFICATION
REGISTERED PROFESSIONAL ENGINEER MARK BIANUCCI No. 52085 CIVIL STATE OF CALIFORNIA
12/08/2020
PROJECT ENGINEER DATE

SANTA CLARA VALLEY WATER DISTRICT
Valley Water
12/30/2020
PROJECT ENGINEER ACCEPTED BY DISTRICT DATE

PROJECT NAME AND SHEET DESCRIPTION:
LOWER CALERA CREEK FLOOD PROTECTION PROJECT
RT BANK RAMP CURB GENERAL PLAN

SCALE: AS SHOWN
VERIFY SCALES: 0 1" IF NOT ONE INCH ON ORIGINAL DRAWING IF NOT ONE INCH ON THIS SHEET, ADJUST SCALES ACCORDINGLY

PROJECT NUMBER: 40174005
SHEET CODE: S-08
SHEET NUMBER: 86 OF 144

Attachment 4
Page 86 of 144

USERNAME: Nfelde 12/17/2020 4:19 PM
FILENAME: J:\SCVWD-SA-17167-Lower Calera Crk Flood Protection\CADD\Structures\S1-S9.DWG
DOCUMENT NUMBER: CAE_CY-S-4018-65991

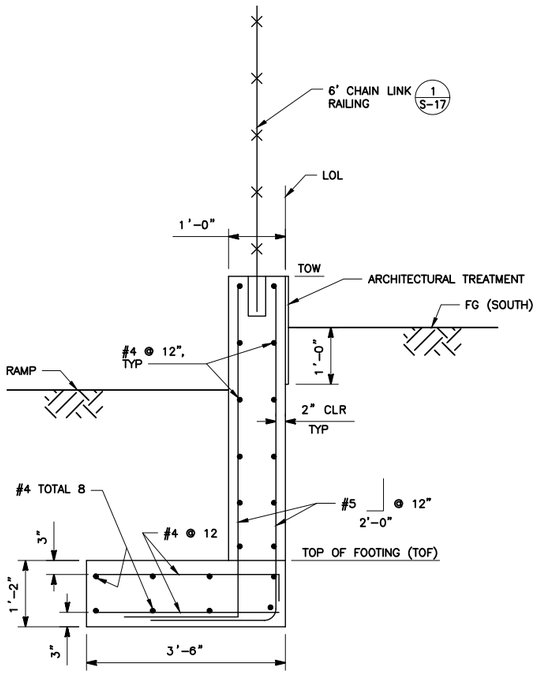

SECTION A – RW TYPE E

SCALE: 3/4" = 1'-0"

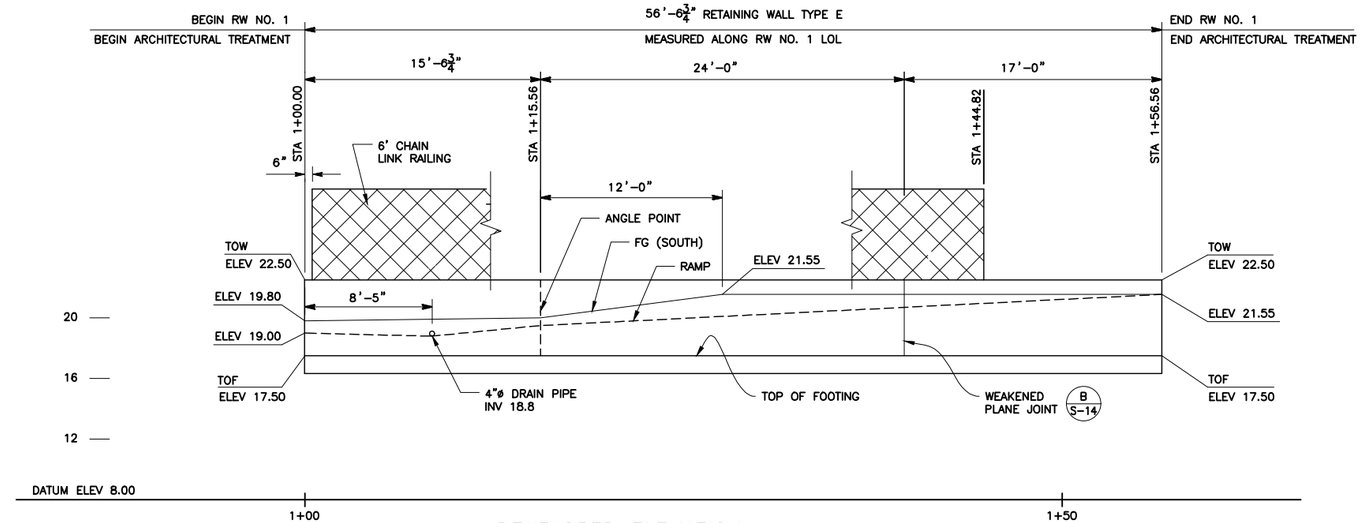

DEVELOPED ELEVATION

SCALE: 1" = 5'

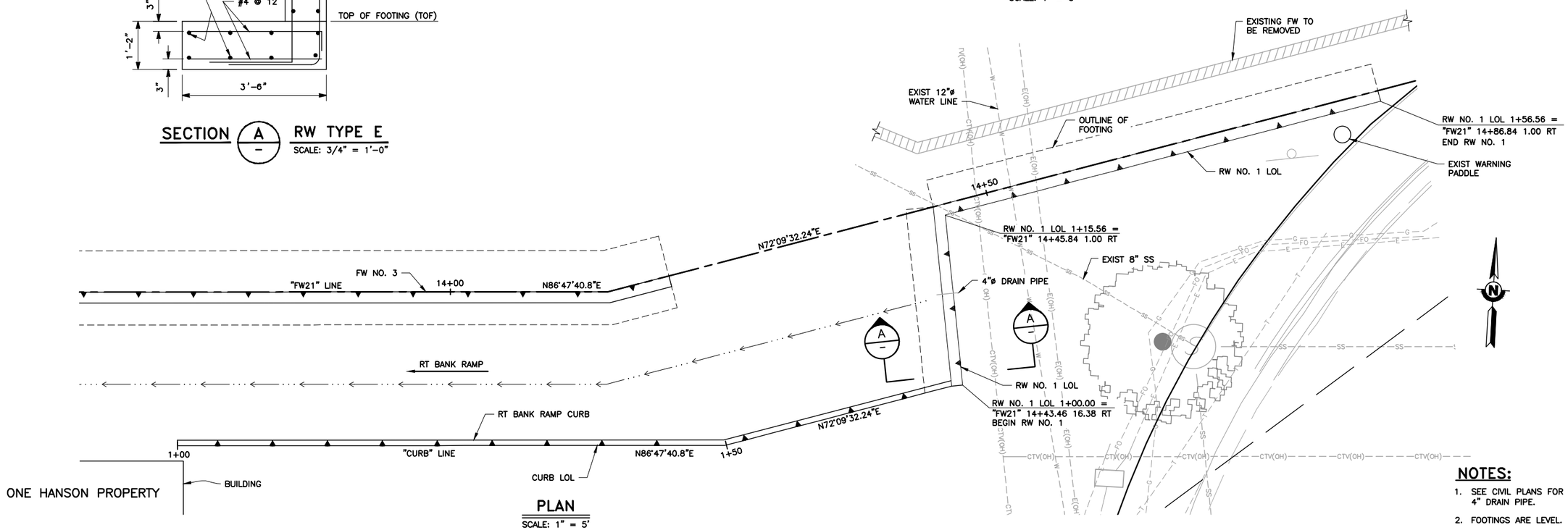

PLAN

SCALE: 1" = 5'

NOTES:

1. SEE CIVIL PLANS FOR GRADING DETAILS AND 4" DRAIN PIPE.
2. FOOTINGS ARE LEVEL.
3. TOP OF WALL PROFILES ARE LINEAR BETWEEN CALL OUTS.
4. UTILITY LINES SHOWN FOR REFERENCE ONLY, SEE "UTILITY PLANS" FOR SPECIFICS.

REV	DESCRIPTION	DATE	APPR	REFERENCE INFORMATION AND NOTES

MARK THOMAS
2833 NORTH JUNCTION AVE, SUITE 110
SAN JOSE, CA 95134

DATE 12/08/2020
DESIGN M. BIANUCCI
DRAWN G. BOYKO
CHECKED J. HICKEY

ENGINEERING CERTIFICATION
REGISTERED PROFESSIONAL ENGINEER MARK BIANUCCI No. 52085 CIVIL STATE OF CALIFORNIA
12/08/2020
PROJECT ENGINEER DATE

SANTA CLARA VALLEY WATER DISTRICT
Valley Water
12/30/2020
PROJECT ENGINEER ACCEPTED BY DISTRICT DATE

PROJECT NAME AND SHEET DESCRIPTION:
LOWER CALERA CREEK FLOOD PROTECTION PROJECT
RETAINING WALL NO. 1 GENERAL PLAN

SCALE: AS SHOWN
VERIFY SCALES: 0 1" — IF NOT ONE INCH ON ORIGINAL DRAWING IF NOT ONE INCH ON THIS SHEET ADJUST SCALES ACCORDINGLY
PROJECT NUMBER: 40174005
SHEET CODE: S-09
SHEET NUMBER: 87 OF 144

DOCUMENT NUMBER: CAE_CY-S-4018-65992

USERNAME: Nfelde 12/17/2020 4:19 PM
FILENAME: J:\SCVWD-SA-17167-Lower Calera Crk Flood Protection\CADD\Structures\S1-S9.DWG

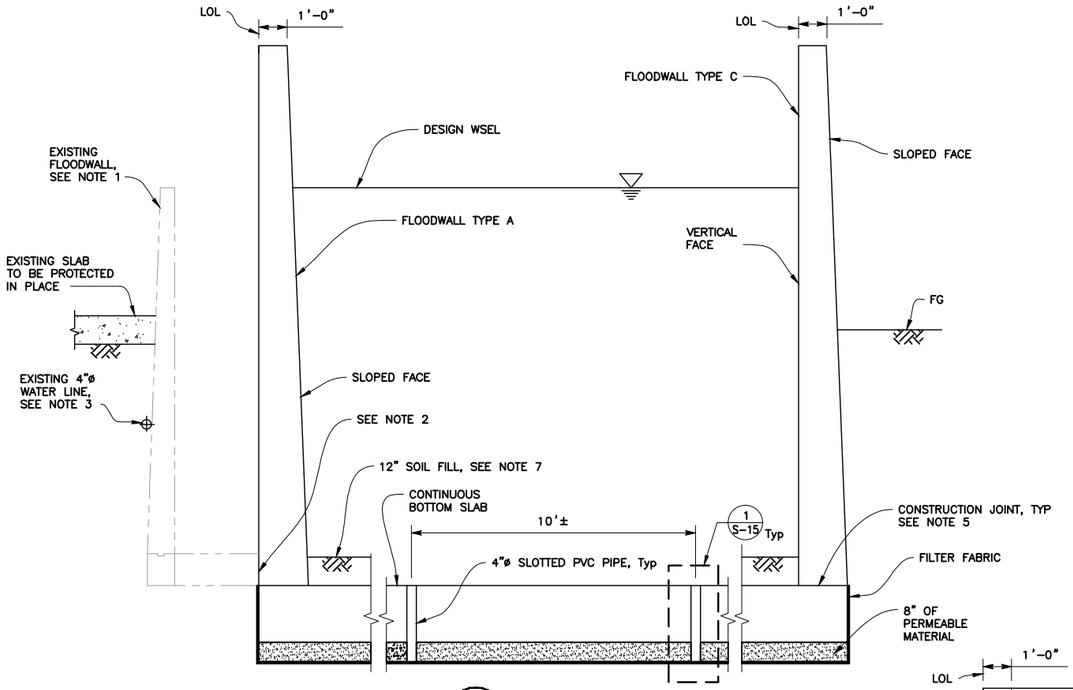

SECTION A S-02 S-06 FLOODWALLS
SCALE: 3/8" = 1'-0"

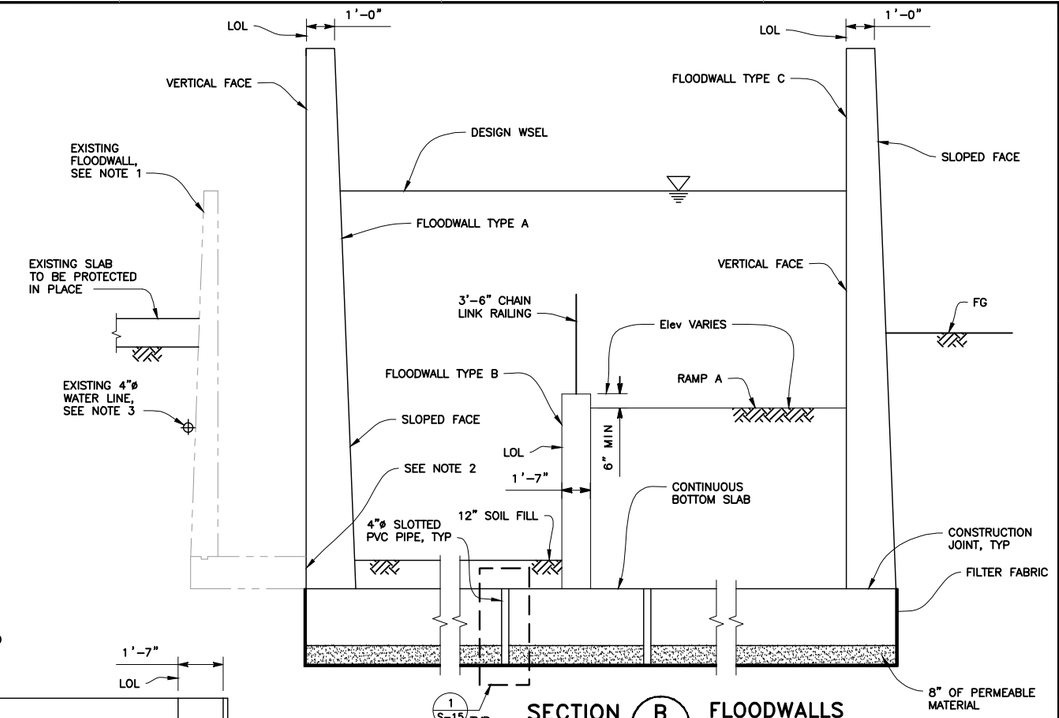

SECTION B S-02 S-04 S-06 FLOODWALLS
SCALE: 3/8" = 1'-0"

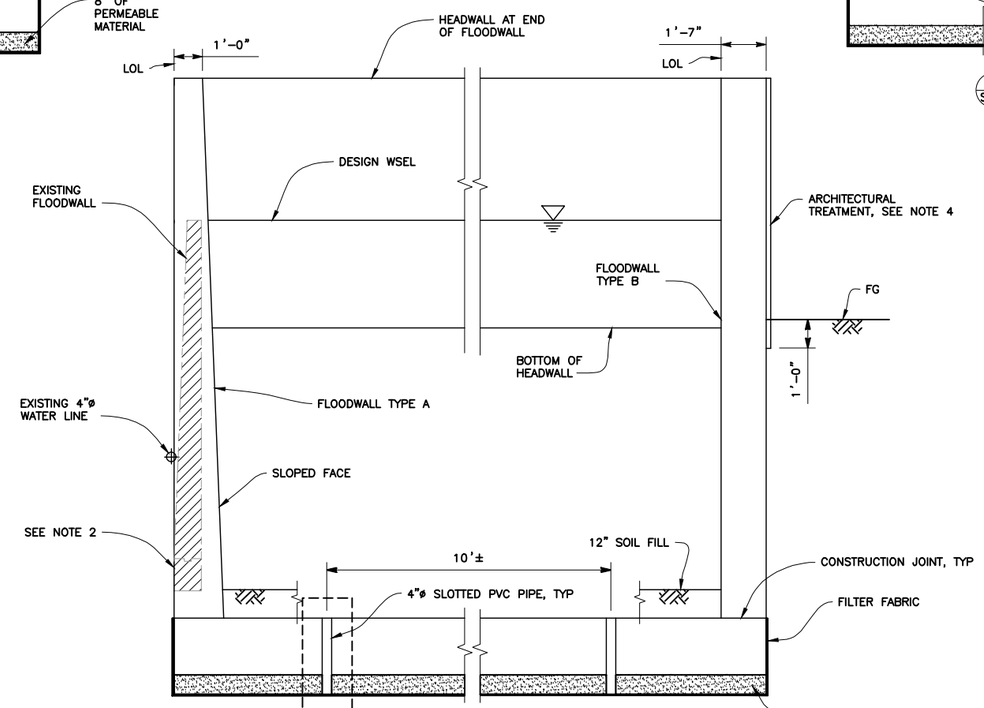

SECTION C S-03 S-05 S-07 FLOODWALLS
SCALE: 3/8" = 1'-0"

NOTES:

1. THE EXISTING FLOODWALL AT MILPITAS MATERIALS COMPANY (MMC) PROPERTY LINE IS TO REMAIN IN PLACE. THE CONTRACTOR IS RESPONSIBLE FOR TEMPORARY SHORING OF THE WALL DURING CONSTRUCTION OF THE NEW FLOODWALL. REFER TO SPECIAL PROVISION SECTION 24.02 "SHORING OF EXISTING FLOODWALL" FOR MORE INFORMATION.
2. SAWCUT THROUGH THE EXISTING FOOTING OF THE FLOODWALL PRIOR TO DEMOLITION OF THE EXISTING FOOTING.
3. THE EXISTING 4" DIAMETER WATER LINE BEHIND THE EXISTING NORTH FLOODWALL, APPROXIMATELY 36" BELOW GRADE SHALL BE PROTECTED IN PLACE.
4. REFER TO SHEETS S-5 AND S-9 FOR EXTENTS OF ARCHITECTURAL TREATMENT.
5. CONSTRUCTION JOINT AT THE BASE OF THE CONCRETE WALL SHALL BE INTENTIONALLY ROUGHED TO 1/4" AMPLITUDE.
6. RAMP A TO BE CONSTRUCTED WITH STRUCTURAL BACKFILL.
7. REFER TO CIVIL PLANS FOR 12" SOIL FILL.

LEGEND:

PERMEABLE MATERIAL

REMOVE FLOODWALL

REV	DESCRIPTION	DATE	APPR	REFERENCE INFORMATION AND NOTES

MARK THOMAS
2833 NORTH JUNCTION AVE, SUITE 110
SAN JOSE, CA 95134

DATE 12/08/2020
DESIGN M. BIANUCCI
DRAWN G. BOYKO
CHECKED J. HICKEY

ENGINEERING CERTIFICATION
REGISTERED PROFESSIONAL ENGINEER MARK BIANUCCI No. 52085 CIVIL STATE OF CALIFORNIA
12/08/2020
PROJECT ENGINEER DATE

SANTA CLARA VALLEY WATER DISTRICT
Valley Water
12/30/2020
PROJECT ENGINEER ACCEPTED BY DISTRICT DATE

PROJECT NAME AND SHEET DESCRIPTION:
LOWER CALERA CREEK FLOOD PROTECTION PROJECT
FLOODWALL SECTIONS

SCALE: AS SHOWN
VERIFY SCALES: 0 1" — IF NOT ONE INCH ON ORIGINAL DRAWING IF NOT ONE INCH ON THIS SHEET, ADJUST SCALES ACCORDINGLY
PROJECT NUMBER: 40174005
SHEET CODE: S-10
SHEET NUMBER: 88 OF 144

USERNAME: Nfelde 12/17/2020 4:47 PM
FILENAME: J:\SCVWD-SA-17167-Lower Calera Crk Flood Protection\CADD\Structures\S10-S14.dwg

DOCUMENT NUMBER: CAE_CY-S-4018-65993

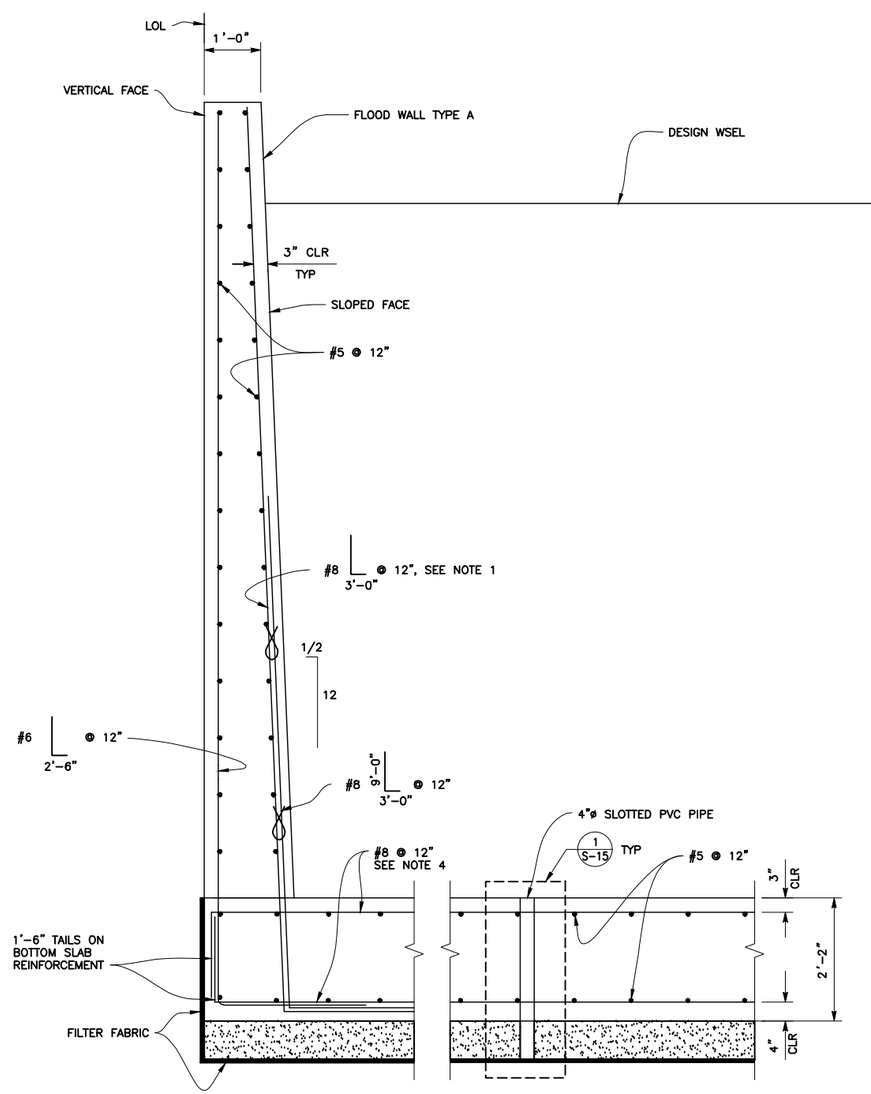

SECTION A S-10 FLOODWALL TYPE A
SCALE: 3/4" = 1'-0"

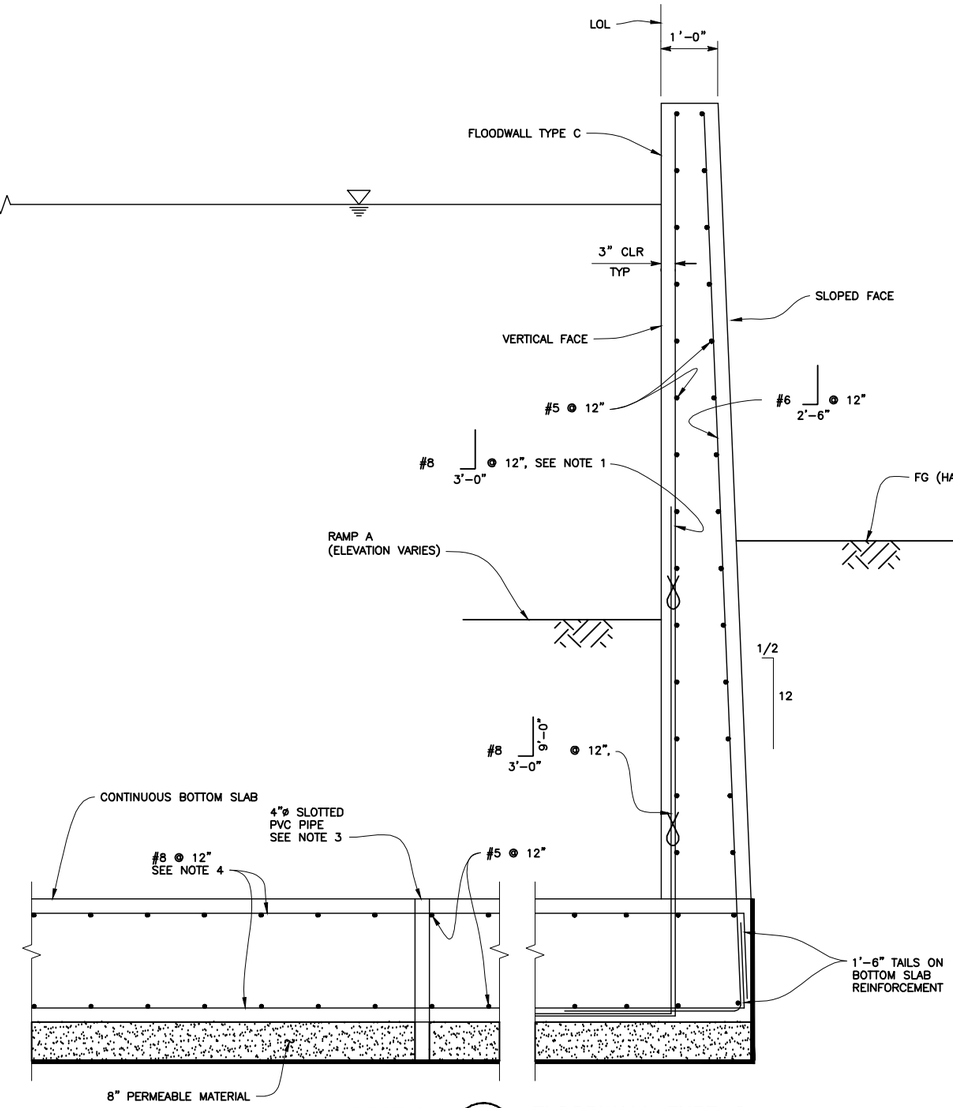

SECTION B S-10 FLOODWALL TYPE C
SCALE: 3/4" = 1'-0"

NOTES:

1. NO REBAR SPLICES IN BOTTOM 6' OF WALL, TYP.
2. BOTTOM SLAB IS CONTINUOUS BETWEEN FLOODWALLS.
3. 4"ø SLOTTED PVC PIPE TO BE SPACED 12' LONGITUDINALLY AND 10' TRANSVERSELY ON CENTER. REFER TO PLAN VIEW FOR LAYOUT.
4. BOTTOM SLAB REINFORCEMENT MAY BE REDUCED TO #6 @ 12" A DISTANCE OF 8' FROM THE FLOOD WALL.

LEGEND:

PERMEABLE MATERIAL
BUNDLED REBAR

REV	DESCRIPTION	DATE	APPR	REFERENCE INFORMATION AND NOTES

Attachment 4
Page 89 of 144

MARK THOMAS
2833 NORTH JUNCTION AVE, SUITE 110
SAN JOSE, CA 95134

DATE 12/08/2020
DESIGN M. BIANUCCI
DRAWN G. BOYKO
CHECKED J. HICKEY

ENGINEERING CERTIFICATION
REGISTERED PROFESSIONAL ENGINEER M. BIANUCCI No. 52085 CIVIL STATE OF CALIFORNIA
12/08/2020
PROJECT ENGINEER DATE

SANTA CLARA VALLEY WATER DISTRICT
Valley Water
12/30/2020
PROJECT ENGINEER ACCEPTED BY DISTRICT DATE

PROJECT NAME AND SHEET DESCRIPTION:
LOWER CALERA CREEK
FLOOD PROTECTION PROJECT
FLOODWALL TYPE A & C DETAILS

SCALE: AS SHOWN
VERIFY SCALES: 0 1" — IF NOT ONE INCH ON ORIGINAL DRAWING IF NOT ONE INCH ON THIS SHEET, ADJUST SCALES ACCORDINGLY
PROJECT NUMBER: 40174005
SHEET CODE: S-11
SHEET NUMBER: 89 OF 144

Attachment 4
Page 89 of 144

USERNAME: Nfelde 12/17/2020 4:48 PM
FILENAME: J:\SCVWD-SA-17167-Lower Calera Crk Flood Protection\CADD\Structures\S10-S14.dwg
DOCUMENT NUMBER: CAE_CY-S-4018-65994

USERNAME: Nfelde 12/17/2020 4:48 PM
FILENAME: J:\SCVWD-SA-17167-Lower Calera Crk Flood Protection\CADD\Structures\S10-S14.dwg

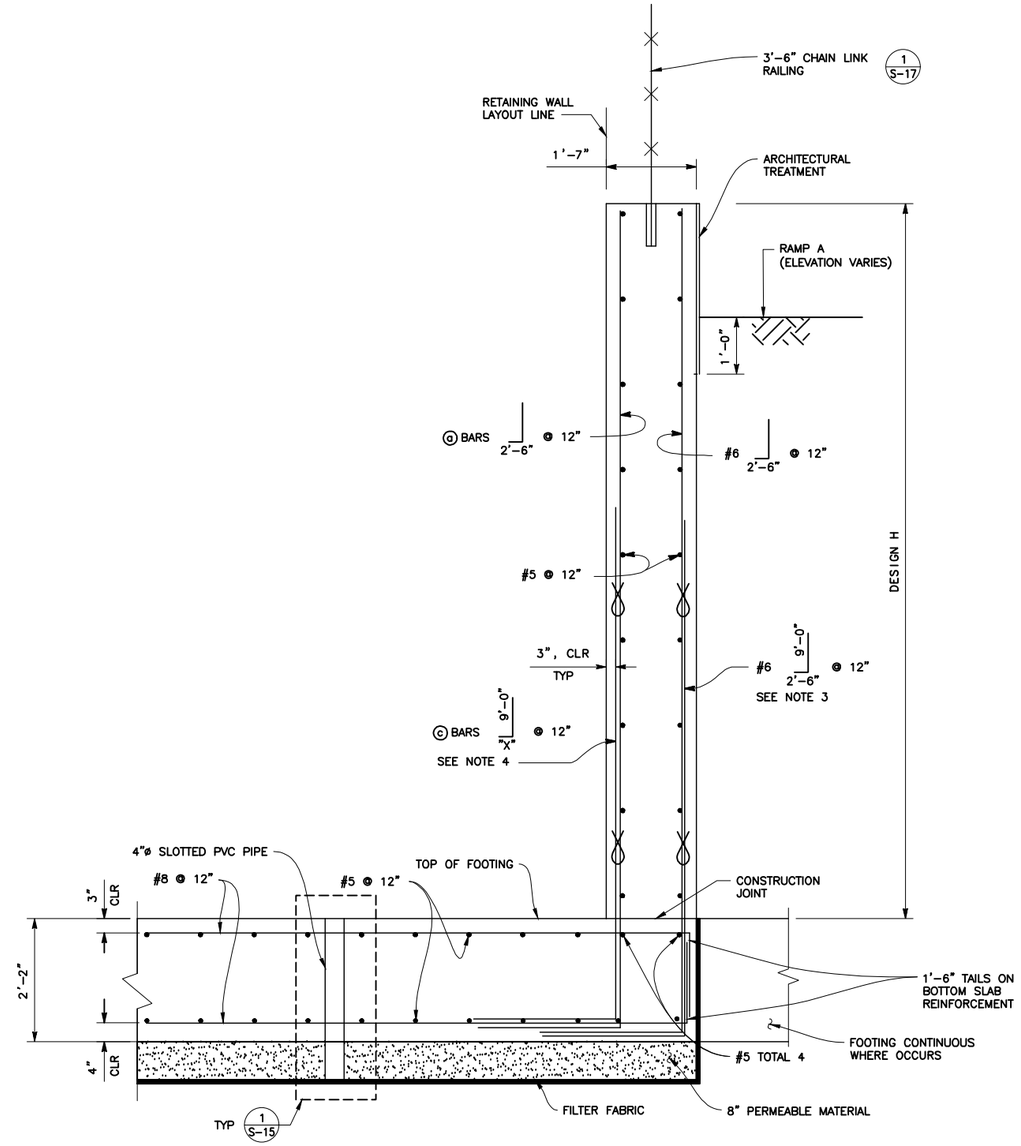

SECTION A / – FLOODWALL TYPE B
SCALE: 3/4" = 1'-0"

TABLE OF WALL DIMENSIONS, REINFORCING STEEL							
DESIGN H	4'	6'	8'	10'	12'	14'	18'
ⓐ BARS	#6	#6	#6	#6	#6	#6	#8
ⓒ BARS					#6	#6	#7
"X"					2'-6"	2'-6"	3'-0"

LEGEND:

BUNDLED REBAR

NOTES:

1. SEE SHEET S-5 FOR EXTENTS OF ARCHITECTURAL TREATMENT LAYOUT.
2. SEE SHEET S-4 & S-5 FOR EXTENTS OF CHAIN LINK RAILING.
3. REBAR TO BE BUNDLED WITH #6 @ 12" FOR H ≥ 12'.
4. ⓒ BARS TO BE BUNDLED WITH ⓐ BARS FOR H ≥ 12'.
5. "H" INDICATES THE DESIGN HEIGHT OF THE WALL.

REV	DESCRIPTION	DATE	APPR	REFERENCE INFORMATION AND NOTES
	Attachment 4 Page 90 of 144			

MARK THOMAS
2833 NORTH JUNCTION AVE, SUITE 110
SAN JOSE, CA 95134

DATE 12/08/2020
DESIGN M. BIANUCCI
DRAWN G. BOYKO
CHECKED J. HICKEY

ENGINEERING CERTIFICATION
REGISTERED PROFESSIONAL ENGINEER ALEX BIANUCCI No. 52085 CIVIL STATE OF CALIFORNIA
12/08/2020
PROJECT ENGINEER DATE

SANTA CLARA VALLEY WATER DISTRICT
Valley Water
12/30/2020
PROJECT ENGINEER ACCEPTED BY DISTRICT DATE

PROJECT NAME AND SHEET DESCRIPTION:
LOWER CALERA CREEK FLOOD PROTECTION PROJECT
FLOODWALL TYPE B – DETAILS

SCALE: AS SHOWN
VERIFY SCALES: 0 1"
IF NOT ONE INCH ON ORIGINAL DRAWING IF NOT ONE INCH ON THIS SHEET, ADJUST SCALES ACCORDINGLY

PROJECT NUMBER: 40174005
SHEET CODE: S-12
SHEET NUMBER: 90 OF 144

Attachment 4
Page 90 of 144

DOCUMENT NUMBER: CAE_CY-S-4018-65995

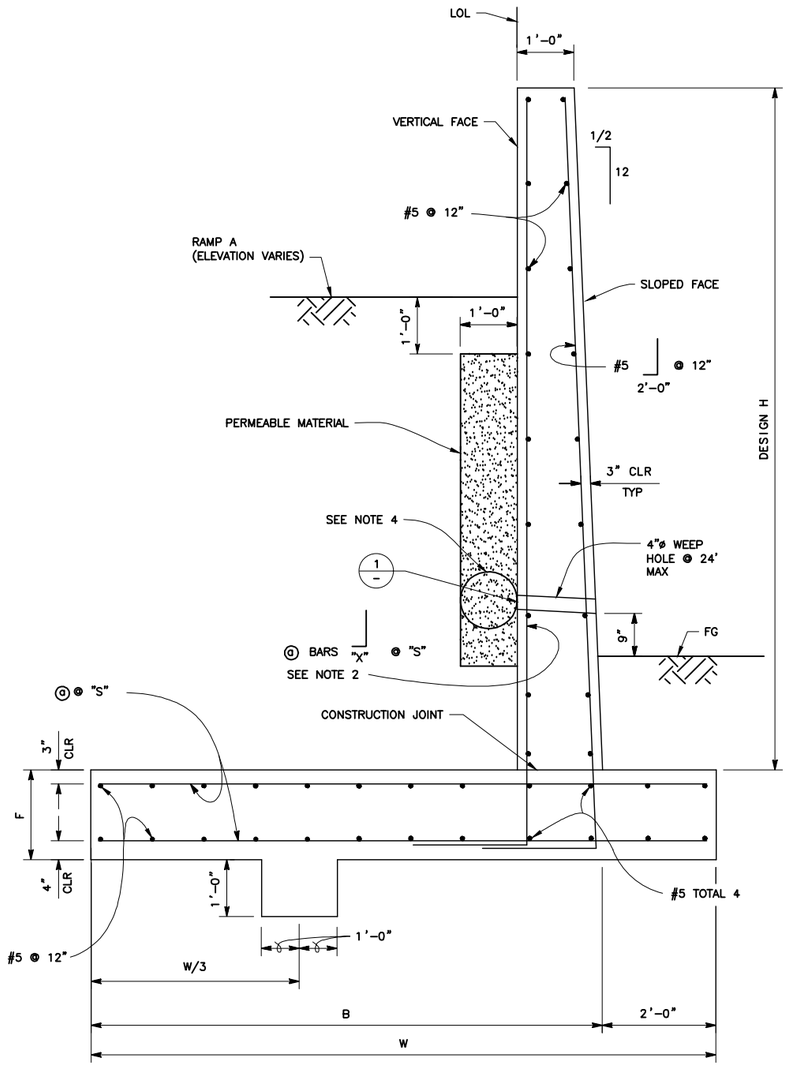

SECTION A – FLOODWALL TYPE D

SCALE: 3/4" = 1'-0"

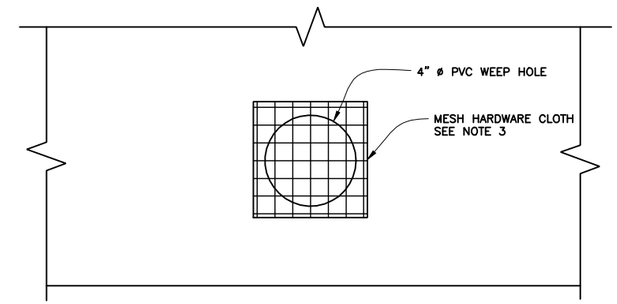

DETAIL 1 – MESH

SCALE: NTS

TABLE OF WALL DIMENSIONS, REINFORCING STEEL			
DESIGN H	8'	12'	15'
W	6'-9"	8'-4"	14'-0"
B	4'-9"	6'-4"	12'-0"
F	1'-4"	1'-6"	1'-8"
ⓐ BARS	#5	#6	#6
SPACING "S"	12"	12"	12"
"X"	2'-0"	2'-6"	2'-6"

NOTES:

1. FOR WALL STEM JOINT DETAILS, SEE "FLOODWALL DETAILS NO.1" SHEET.
2. NO SPLICES ALLOWED WITHIN H/4 ABOVE THE TOP OF FOOTING.
3. 6" SQUARE ALUMINUM OR GALVANIZED STEEL WIRE 1/4" MESH HARDWARE CLOTH, MINIMUM WIRE DIAMETER 0.025". ANCHOR TO CONCRETE WITH EPOXY.
4. ONE CUBIC FOOT PERMEABLE BACKFILL MATERIAL IN A NON WOVEN FILTER FABRIC, SECURELY TIED.
5. "H" INDICATES THE DESIGN HEIGHT OF THE WALL.
6. ROUGHEN CONSTRUCTION JOINTS TO 1/4" AMPLITUDE.

REV	DESCRIPTION	DATE	APPR	REFERENCE INFORMATION AND NOTES

MARK THOMAS
2833 NORTH JUNCTION AVE, SUITE 110
SAN JOSE, CA 95134

DATE 12/08/2020
DESIGN M. BIANUCCI
DRAWN G. BOYKO
CHECKED J. HICKEY

ENGINEERING CERTIFICATION
REGISTERED PROFESSIONAL ENGINEER MARK BIANUCCI No. 52085 CIVIL STATE OF CALIFORNIA
12/08/2020
PROJECT ENGINEER DATE

SANTA CLARA VALLEY WATER DISTRICT
Valley Water
12/30/2020
PROJECT ENGINEER ACCEPTED BY DISTRICT DATE

PROJECT NAME AND SHEET DESCRIPTION:
LOWER CALERA CREEK
FLOOD PROTECTION PROJECT
FLOODWALL TYPE D – DETAILS

SCALE: AS SHOWN
VERIFY SCALES: 0 1"
IF NOT ONE INCH ON ORIGINAL DRAWING IF NOT ONE INCH ON THIS SHEET, ADJUST SCALES ACCORDINGLY

PROJECT NUMBER: 40174005
SHEET CODE: S-13
SHEET NUMBER: 91 OF 144

DOCUMENT NUMBER: CAE_CY-S-4018-65996

USERNAME: Nfelde 12/17/2020 4:48 PM
FILENAME: J:\SCVWD-SA-17167-Lower Calera Crk Flood Protection\CADD\Structures\S10-S14.dwg

Attachment 4
Page 91 of 144

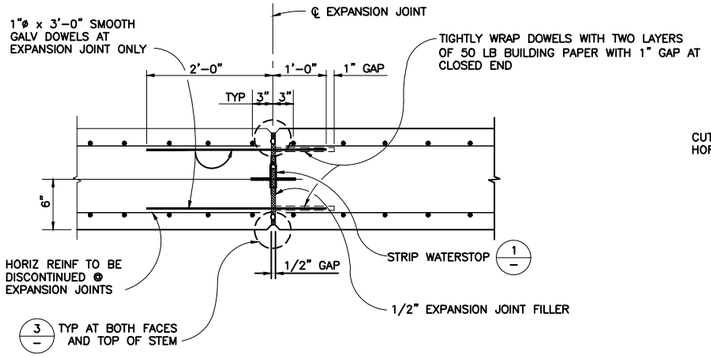

SECTION A/- EXPANSION JOINT AT WALL

SCALE: NTS

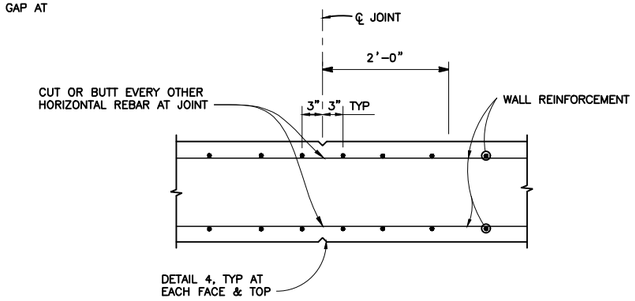

SECTION B/- WEAKENED PLANE JOINT AT WALL

SCALE: NTS

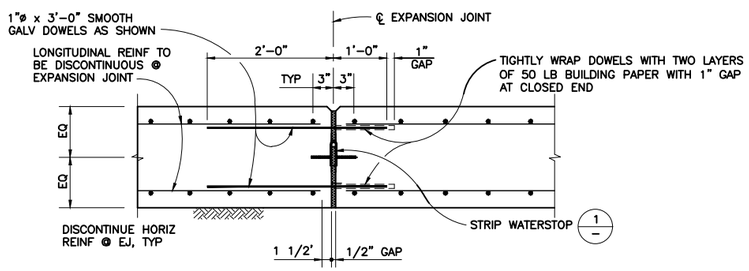

SECTION C/- EXPANSION JOINT AT FOOTING

SCALE: N.T.S.

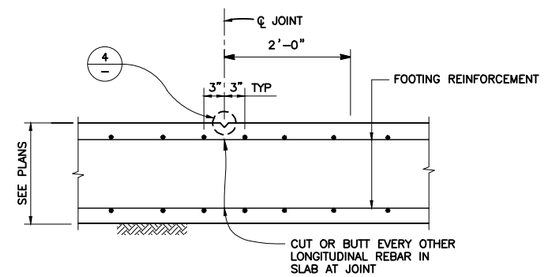

SECTION D/- WEAKENED PLANE JOINT AT FOOTING

SCALE: NTS

NOTES:

1. CONTRACTOR SHALL VERIFY ALL CONTROLLING FIELD DIMENSIONS, ALL DRAWINGS AND DETAILS BEFORE ORDERING OR FABRICATING ANY MATERIAL.
2. SMOOTH DOWELS SHALL BE A36 GALVANIZED AFTER FABRICATION. EPOXY COATED DOWEL OPTION IS NOT AVAILABLE. CONTRACTOR MAY SUBSTITUTE GALVANIZED SMOOTH DOWELS WITH STAINLESS STEEL (AISI TYPE 300/304) OR EQUIVALENT AT NO ADDITIONAL COST.
3. ALL EXPANSION JOINTS AND CONSTRUCTION JOINTS AT STRAIGHT WALL SEGMENTS SHALL BE PERPENDICULAR TO THE FLOOD WALL LAYOUT LINE, TYPICAL UNLESS OTHERWISE NOTED.
4. EXPANSION AND WEAKENED PLANE JOINTS AT FLOODWALL AS SHOWN ON WALL PROFILE SHEETS.
5. WATERSTOP SHALL BE HYDROPHILIC MATERIAL, INSTALLED CONTINUOUSLY AT ALL HORIZONTAL AND VERTICAL JOINTS PER PRODUCT MANUFACTURER'S RECOMMENDATIONS TO ENSURE FULL WATERTIGHTNESS.
6. CONTRACTOR SHALL SUBMIT WATER STOP PRODUCT DATA AND INSTALLATION PROCEDURE FOR DISTRICT'S REVIEW.
   (A) SUBMIT ALL TECHNICAL DATA, SAMPLES, INSTALLATION DETAILS & PROCEDURES.
   (B) PROVIDE MANUFACTURER'S WARRANTIES IN WRITING TO THE DISTRICT FOR THE PERFORMANCE OF THE PRODUCT(S).
7. SNAP TYPE PLASTIC OR METAL FORM TIES SHALL BE OF CONTRACTOR'S CHOICE FOR REQUIRED CAPACITY PER CONTRACTOR'S FORMWORK DESIGN. ALL HOLES LEFT AFTER REMOVAL OF TIES OR THE PORTION THEREOF SHALL BE ENTIRELY FILLED WITH NON-SHRINK, NON-METALLIC GROUT FLUSH AND CLEANED AT CONTRACTOR'S COST. CONTRACTOR SHALL SUBMIT SHOP DRAWINGS WITH TIE MANUFACTURER'S LITERATURE FOR DISTRICT'S REVIEW PRIOR TO CONSTRUCTION.
8. SMOOTH DOWELS AT EXPANSION JOINTS SHALL BE SPACED AT 5' OC.

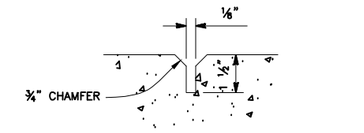

JOINT MAY BE FORMED WITH 1/8" HARDBOARD AND CUT BACK TO THE ROOT OF THE CHAMFER ON THE EXPOSED FACE.

DETAIL 4/- WEAKENED PLANE JOINT

SCALE: NTS

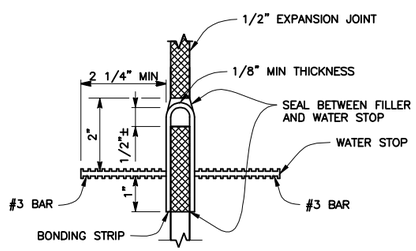

DETAIL 1/- WATERSTOP

SCALE: NTS

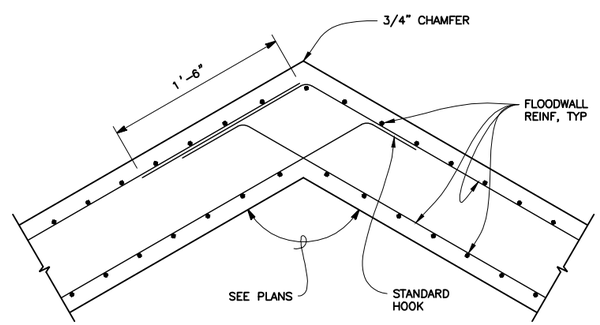

DETAIL 2/- STEM WALL REINFORCING AT ANGLE POINTS

SCALE: NTS

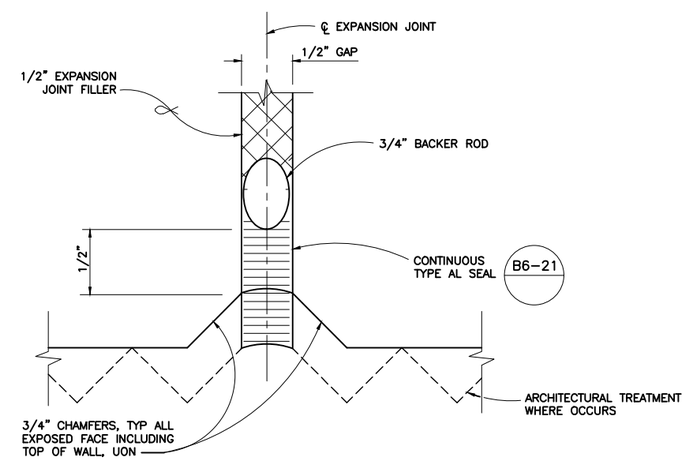

DETAIL 3/- EXPANSION JOINT SEAL

SCALE: NTS

NOTE: SEAL DETAIL NOT REQUIRED AT BURIED FOOTING EXPANSION JOINTS

REV	DESCRIPTION	DATE	APPR	REFERENCE INFORMATION AND NOTES
	Attachment 4 Page 92 of 144			

MARK THOMAS
2833 NORTH JUNCTION AVE, SUITE 110
SAN JOSE, CA 95134

DATE 12/08/2020
DESIGN M. BIANUCCI
DRAWN G. BOYKO
CHECKED J. HICKEY

ENGINEERING CERTIFICATION
REGISTERED PROFESSIONAL ENGINEER MARK BIANUCCI No. 52085 CIVIL STATE OF CALIFORNIA
12/08/2020
PROJECT ENGINEER DATE

SANTA CLARA VALLEY WATER DISTRICT
Valley Water
12/30/2020
PROJECT ENGINEER ACCEPTED BY DISTRICT DATE

PROJECT NAME AND SHEET DESCRIPTION:
LOWER CALERA CREEK
FLOOD PROTECTION PROJECT
FLOODWALL DETAILS No. 1

SCALE: AS SHOWN
VERIFY SCALES: 0 1" — IF NOT ONE INCH ON ORIGINAL DRAWING IF NOT ONE INCH ON THIS SHEET, ADJUST SCALES ACCORDINGLY
PROJECT NUMBER: 40174005
SHEET CODE: S-14
SHEET NUMBER: 92 OF 144

USERNAME: Nfelde 12/17/2020 4:48 PM
FILENAME: J:\SCVWD-SA-17167-Lower Calera Crk Flood Protection\CADD\Structures\S10-S14.dwg
DOCUMENT NUMBER: CAE_CY-S-4018-65997

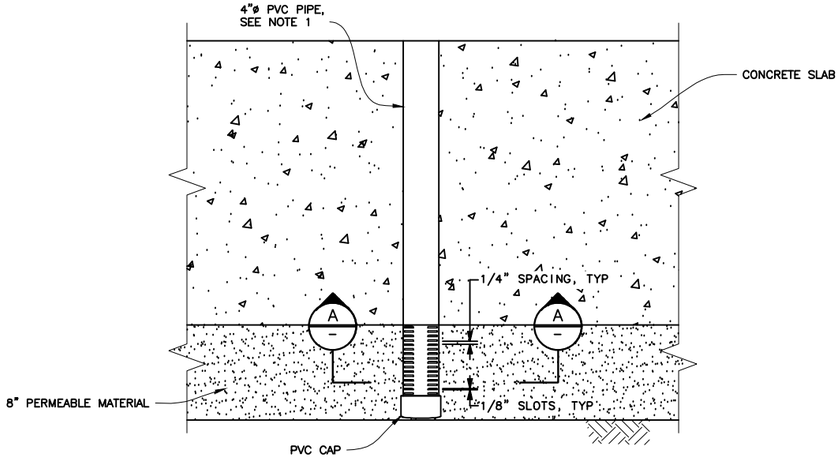

DETAIL 1 / S-10 EQUALIZATION HOLES
SCALE: NTS
S-11
S-12

NOTES:

1. SEE PLAN VIEW FOR LOCATION OF PVC PIPE DRAINS.
2. SPACE LONGITUDINALLY AND TRANSVERSELY @ 10' O.C.
3. CUT PVC FLUSH WITH TOP SURFACE OF CONCRETE SLAB.
4. WRAP ONE LAYER OF FILTER FABRIC TIGHTLY OVER SLOTTED PIPE.
5. FILL PVC PIPE WITH 3/8" PEA GRAVEL.

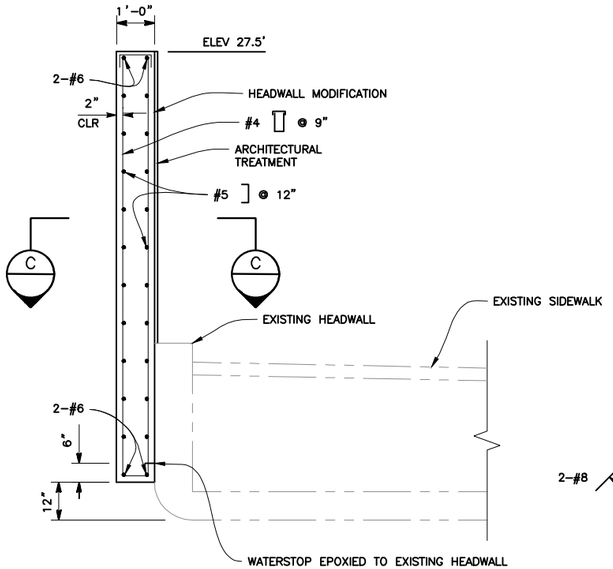

SECTION B / S-03 HEADWALL
SCALE: NTS
S-05

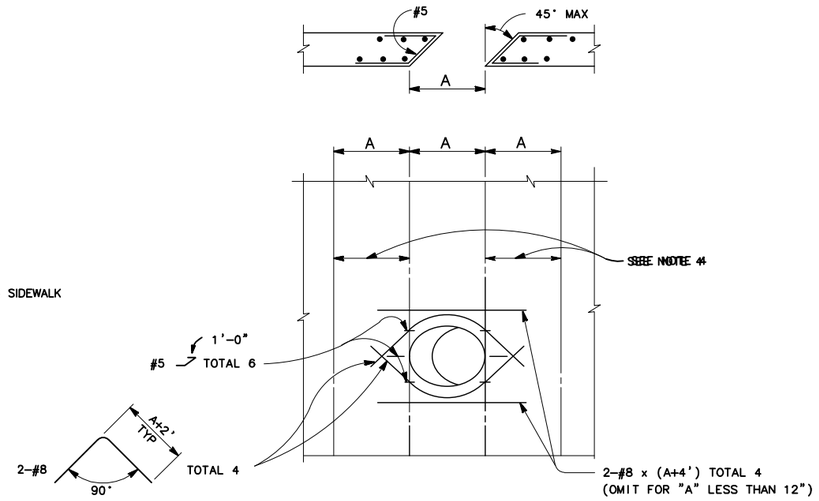

DETAIL 2 / S-02 PIPE OPENING
SCALE: NTS
S-05
S-06

NOTES:

1. PROVIDE A 1" MINIMUM ANNULAR SPACE AROUND PIPE.
2. ALL REINJFORCEMENT TO CLEAR OPENING BY 2" MINIMUM.
3. HORIZONTAL REINFORCEMENT PER PLANS EXCEPT AS SHOWN.
4. STANDARD VERTICAL REINFORCEMENT PLUS ADDITIONAL VERTICAL BARS CORRESPONDING IN SIZE AND NUMBER TO BARS CUT BY THE OPENING. PLACE HALF ON EACH SIDE AND BUNDLE REBAR. EXTEND THE ADDITIONAL BARS INTO THE FOOTING THE SAME AS OTHER VERTICAL WALL REINFORCEMENT AND TO A MINIMUM OF 60 BAR DIAMETERS ABOVE THE TOP OF UTILITY OPENING.

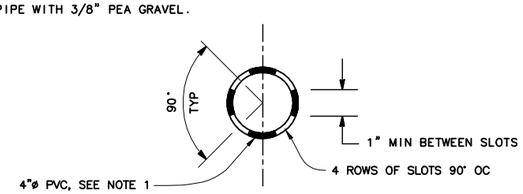

SECTION A / – PVC PIPE
SCALE: NTS

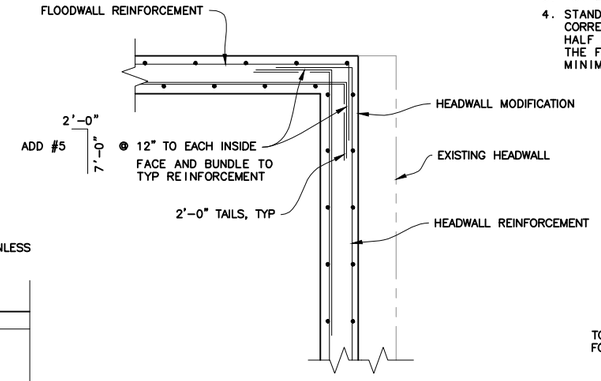

SECTION C / S-02 HEADWALL CORNER
SCALE: NTS
S-03
S-05
S-06

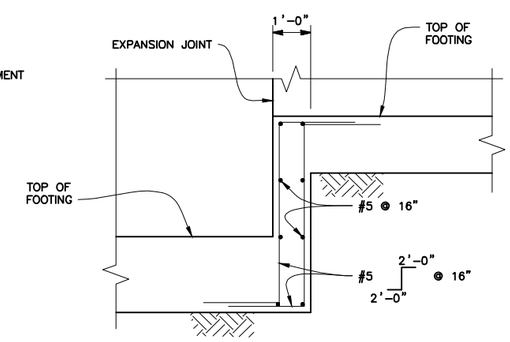

DETAIL 3 / S-07 FOOTING STEP
SCALE: NTS

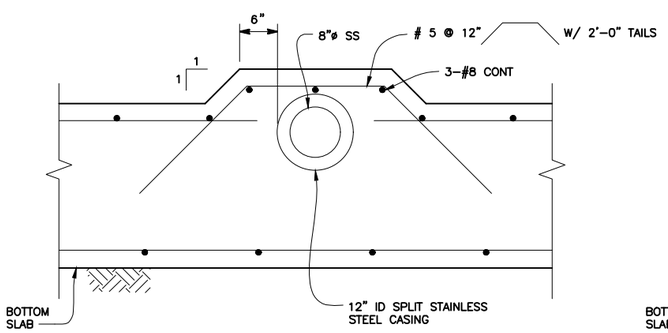

DETAIL 4 / S-03 SEWER PIPE
SCALE: NTS
S-05

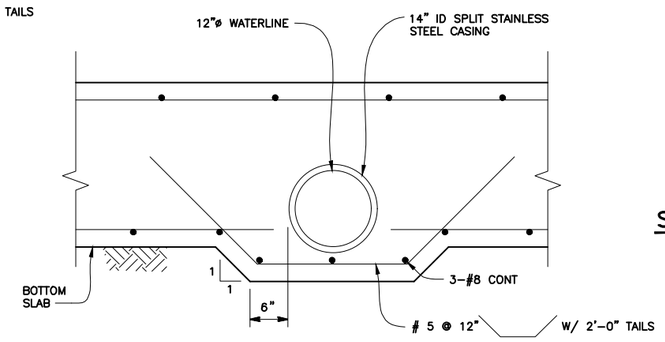

DETAIL 5 / S-03 WATERLINE
SCALE: NTS
S-05

REV	DESCRIPTION	DATE	APPR	REFERENCE INFORMATION AND NOTES

Attachment 4
Page 93 of 144

MARK THOMAS
2833 NORTH JUNCTION AVE, SUITE 110
SAN JOSE, CA 95134

DATE 12/08/2020
DESIGN M. BIANUCCI
DRAWN G. BOYKO
CHECKED J. HICKEY

ENGINEERING CERTIFICATION
REGISTERED PROFESSIONAL ENGINEER MARK BIANUCCI No. 52085 CIVIL STATE OF CALIFORNIA
12/08/2020
PROJECT ENGINEER DATE

SANTA CLARA VALLEY WATER DISTRICT
Valley Water
12/30/2020
PROJECT ENGINEER ACCEPTED BY DISTRICT DATE

PROJECT NAME AND SHEET DESCRIPTION:
LOWER CALERA CREEK
FLOOD PROTECTION PROJECT
FLOODWALL DETAILS No. 2

SCALE: AS SHOWN
VERIFY SCALES: 0 1" FULL SIZE INCH ON ORIGINAL DRAWING IF NOT ONE INCH ON THIS SHEET, ADJUST SCALES ACCORDINGLY
PROJECT NUMBER: 40174005
SHEET CODE: S-15
SHEET NUMBER: 93 OF 144

Attachment 4
Page 93 of 144

USERNAME: Nfelde 12/17/2020 4:45 PM
FILENAME: J:\SCVWD-SA-17167-Lower Calera Crk Flood Protection\CADD\Structures\S15-S17.dwg
DOCUMENT NUMBER: CAE_CY-S-4018-65998

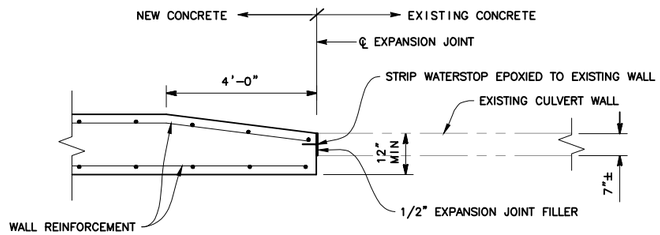

SECTION A (S-05) EXPANSION JOINT AT EXISTING SOUTH WALL

SCALE: 1/2" = 1'-0"

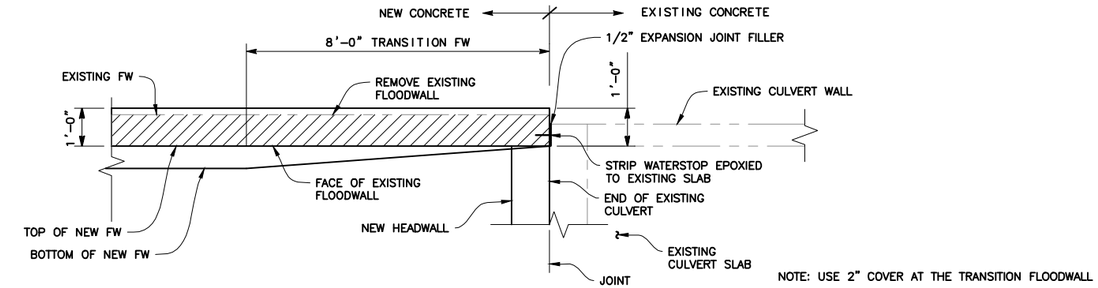

SECTION B (S-03) EXPANSION JOINT AT EXISTING NORTH WALL

SCALE: 1/2" = 1'-0"

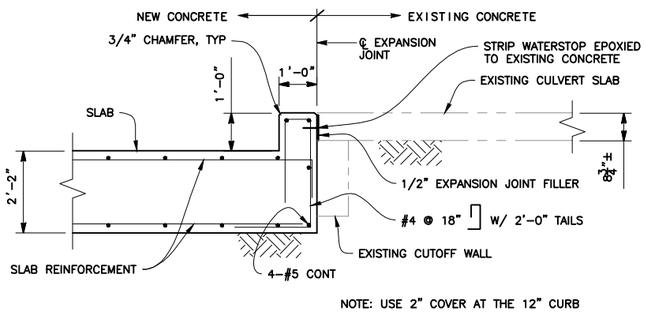

SECTION C (S-03) EXPANSION JOINT AT EXISTING SLAB

SCALE: 1/2" = 1'-0"

S-05

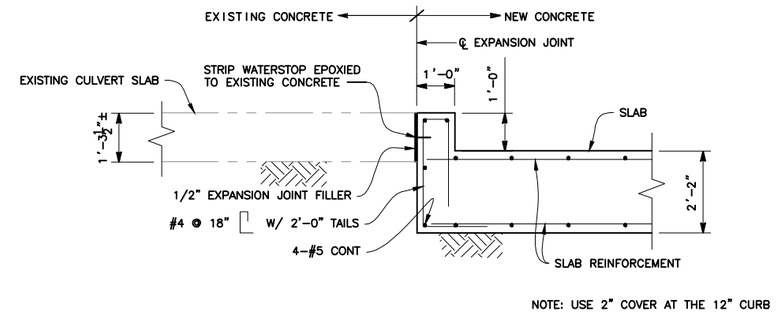

SECTION D (S-02) EXPANSION JOINT AT EXISTING SLAB

SCALE: 1/2" = 1'-0"

S-06

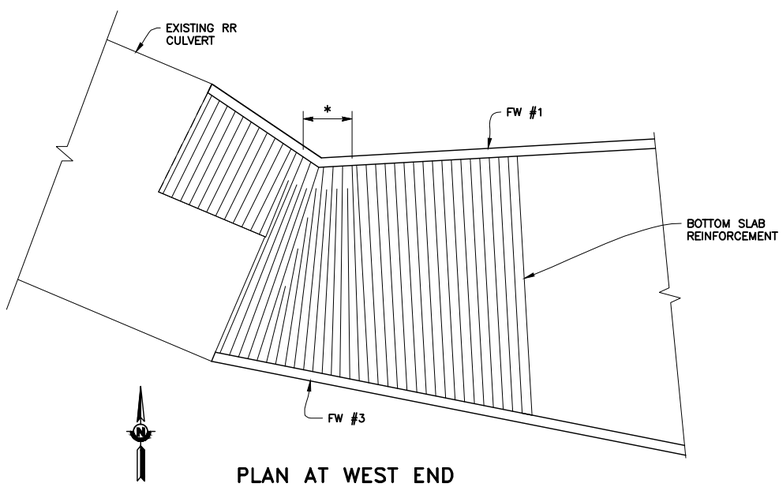

PLAN AT WEST END

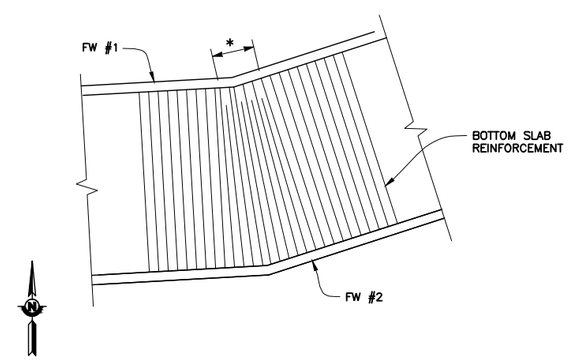

PLAN AT ANGLE POINT

DETAIL A (S-16) BOTTOM SLAB REINFORCEMENT

SCALE: NTS

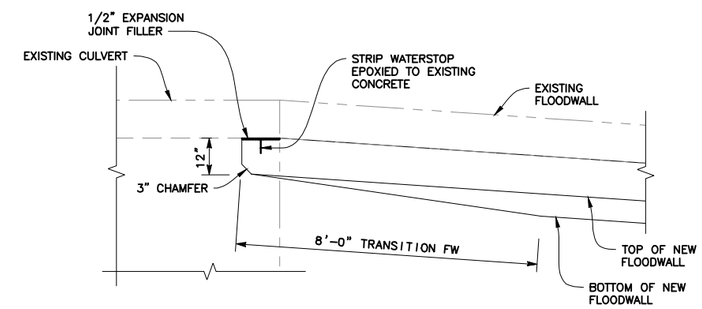

SECTION E (S-02) END DETAIL AT RR CULVERT

SCALE: NTS

LEGEND:

REMOVE FLOODWALL CONCRETE

* REDUCE REINFORCEMENT SPACING AS REQUIRED AT ANGLE POINTS

REV	DESCRIPTION	DATE	APPR	REFERENCE INFORMATION AND NOTES
	Attachment 4 Page 94 of 144			

MARK THOMAS
2833 NORTH JUNCTION AVE, SUITE 110
SAN JOSE, CA 95134

DATE 12/08/2020
DESIGN M. BIANUCCI
DRAWN G. BOYKO
CHECKED J. HICKEY

ENGINEERING CERTIFICATION
REGISTERED PROFESSIONAL ENGINEER — MARK BIANUCCI No. 52085 — CIVIL — STATE OF CALIFORNIA
12/08/2020
PROJECT ENGINEER DATE

SANTA CLARA VALLEY WATER DISTRICT
Valley Water
PROJECT ENGINEER ACCEPTED BY DISTRICT 12/30/2020 DATE

PROJECT NAME AND SHEET DESCRIPTION:
LOWER CALERA CREEK
FLOOD PROTECTION PROJECT
FLOODWALL DETAILS No. 3

SCALE: AS SHOWN
VERIFY SCALES: 0 1" — IF NOT ONE INCH ON ORIGINAL DRAWING IF NOT ONE INCH ON THIS SHEET, ADJUST SCALES ACCORDINGLY

PROJECT NUMBER 40174005
SHEET CODE: S-16
SHEET NUMBER: 94 OF 144

Attachment 4
Page 94 of 144

USERNAME: Nfelde 12/17/2020 4:44 PM
FILENAME: J:\SCVWD-SA-17167-Lower Calera Crk Flood Protection\CADD\Structures\S15-S17.dwg
DOCUMENT NUMBER: CAE_CY-S-4018-65999

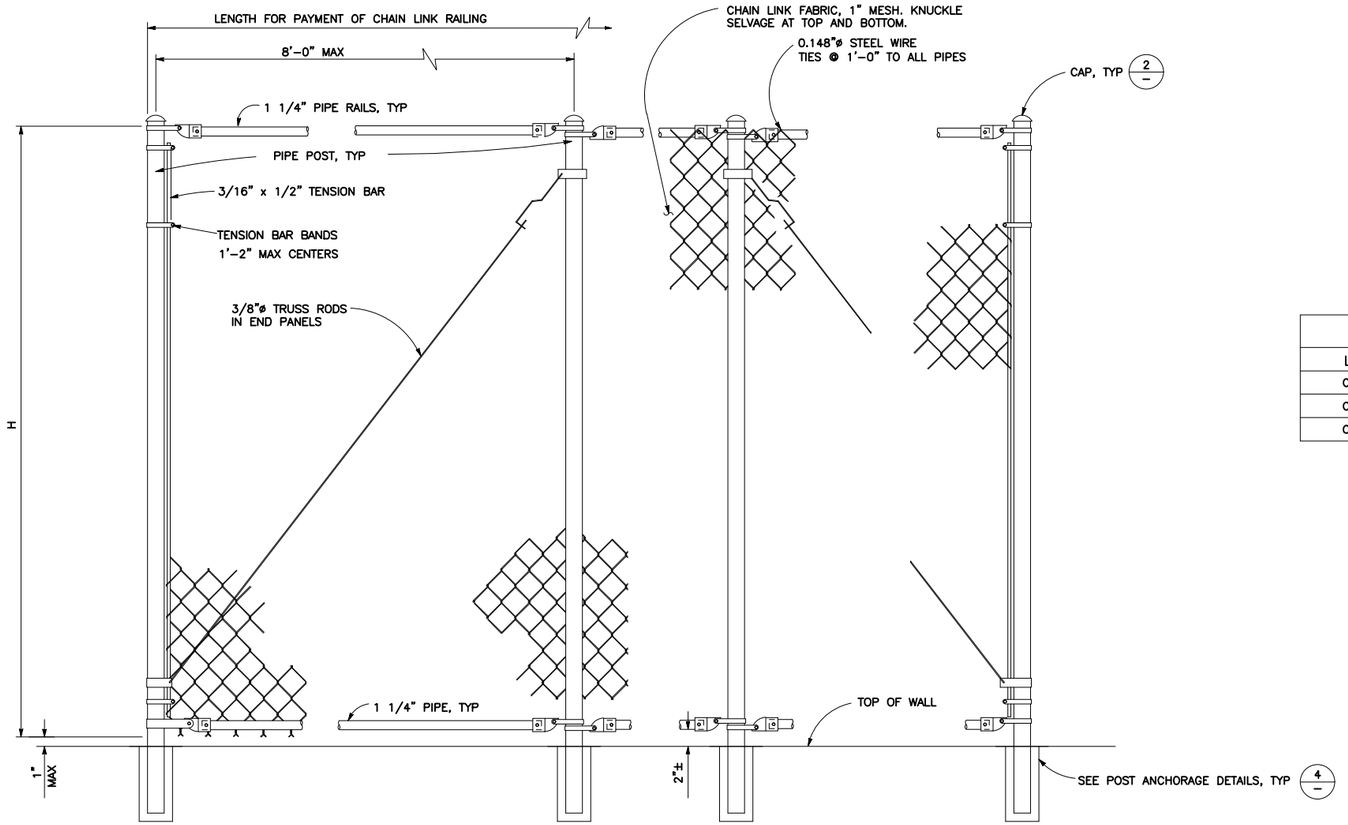

DETAIL 1/S-04 CHAIN LINK RAILING

SCALE: NTS

S-05
S-08
S-09

NOTES:

1. CHAIN LINK FABRIC AND POST WILL BE BLACK VINYL COATED. REFER TO SPECIFICATION.
2. POSTS SHALL BE INSTALLED VERTICALLY.
3. PIPE SHALL BE STEEL SCHEDULE 40, TYP.
4. PEEN ALL BOLT THREADS.
5. CONTRACTOR SHALL SUBMIT RAILING SHOP DRAWINGS PRIOR TO INSTALLATION.

CHAIN LINK RAILING TABLE

LABEL	H	POST
CL-3.5	3'-6"	2.0"ø
CL-6	6'-0"	2.5"ø
CL-8	8'-0"	2.5"ø

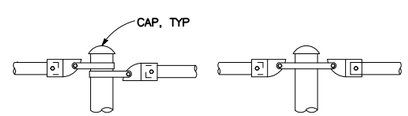

DETAIL 2/- ALTERNATIVE DETAILS

SCALE: NTS

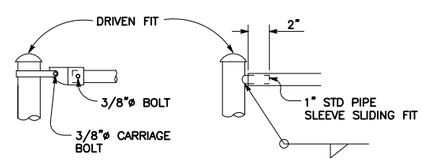

DETAIL 3/- TYPICAL CONNECTION DETAILS

SCALE: NTS

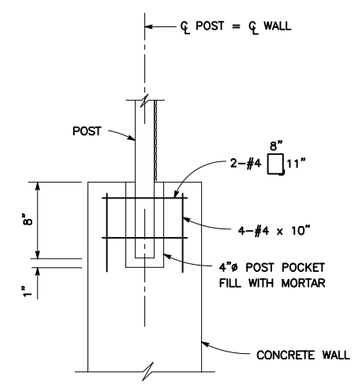

DETAIL 4/- POST ANCHORAGE DETAILS

SCALE: NTS

REV	DESCRIPTION	DATE	APPR	REFERENCE INFORMATION AND NOTES
	Attachment 4 Page 95 of 144			

MARK THOMAS
2833 NORTH JUNCTION AVE,
SUITE 110
SAN JOSE, CA 95134

DATE 12/08/2020
DESIGN M. BIANUCCI
DRAWN G. BOYKO
CHECKED J. HICKEY

ENGINEERING CERTIFICATION
REGISTERED PROFESSIONAL ENGINEER M. BIANUCCI No. 52085 CIVIL STATE OF CALIFORNIA
12/08/2020
PROJECT ENGINEER DATE

SANTA CLARA VALLEY WATER DISTRICT
Valley Water
12/30/2020
PROJECT ENGINEER ACCEPTED BY DISTRICT DATE

PROJECT NAME AND SHEET DESCRIPTION:
LOWER CALERA CREEK
FLOOD PROTECTION PROJECT
CHAIN LINK RAILING

SCALE AS SHOWN
VERIFY SCALES 0 1"
IF NOT ONE INCH ON ORIGINAL DRAWING IF NOT ONE INCH ON THIS SHEET, ADJUST SCALES ACCORDINGLY

PROJECT NUMBER 40174005
SHEET CODE: S-17
SHEET NUMBER: 95 OF 144

Attachment 4
Page 95 of 144

DOCUMENT NUMBER: CAE_CY-S-4018-66000

USERNAME: Nfelde 12/17/2020 4:46 PM
FILENAME: J:\SCVWD-SA-17167-Lower Calera Crk Flood Protection\CADD\Structures\S15-S17.dwg

HEADWALL GENERAL NOTES

DESIGN:
AASHTO LRFD Bridge Design Specifications, 6th Edition, and Caltrans Amendments, Preface dated November 2014

US Army Corps of Engineers, "Retaining and Flood Walls" EM 1110-2-2502, September 1989

US Army Corps of Engineers, "Strength Design for Reinforced Concrete Hydraulic Structures" EM 1110-2-2104, November 2016

ACI 318-14, Building Code Requirements for Structural Concrete and Commentary, 2014.

HYDROSTATIC LOAD: 62.4 pcf

REINFORCED CONCRETE:
f'c = 4,000 psi
fy = 60,000 psi

EXISTING CONCRETE:
fy = 40,000 psi
f'c = 5,000 psi (assumed)

FLOODWALL GENERAL NOTES

DESIGN:
US Army Corps of Engineers, "Retaining and Flood Walls" EM 1110-2-2502 September 1989
US Army Corps of Engineers, "Strength Design for Reinforced Concrete Hydraulic Structures" EM 1110-2-2104 November 2016

HYDROSTATIC LOAD: 62.4 pcf

SOIL PARAMETERS:
γ = 125 pcf (typical)
Undrained condition: ϕ = 0 c = 800 psf
Drained condition: ϕ = 32 c = 0 psf
Soil Bearing Pressure 10,500 psf (ultimate)
Coefficient of friction 0.4 (ultimate)

EARTH LOAD:
Active 85 pcf level backfill
Passive 235 pcf

REINFORCED CONCRETE:
f'c = 4000 psi
fy = 60,000 psi
γ = 150 pcf (unit weight)

SEISMIC:
pga = 0.43g
Load = 13 pcf

CONSTRUCTION LOADING: 2 ft level earth (surcharge)

INDEX TO PLANS

SHEET	TITLE
S-41	GENERAL NOTES
S-42	KEY PLAN
S-43	HEADWALL GENERAL PLAN
S-44	UPRR HEADWALL EXTENSIONS
S-45	HEADWALL DETAILS NO 1
S-46	HEADWALL DETAILS NO 2
S-47	FLOODWALL PLAN NO 1
S-48	FLOODWALL PLAN NO 2
S-49	FLOODWALL PLAN NO 3
S-50	FLOODWALL PLAN NO 4
S-51	FLOODWALL ELEVATION NO 1
S-52	FLOODWALL ELEVATION NO 2
S-53	FLOODWALL ELEVATION NO 3
S-54	FLOODWALL ELEVATION NO 4
S-55	FLOODWALL ELEVATION NO 5
S-56	FLOODWALL ELEVATION NO 6
S-57	FLOODWALL ELEVATION NO 7
S-58	FLOODWALL ELEVATION NO 8
S-59	FLOODWALL DETAILS NO 1
S-60	FLOODWALL DETAILS NO 2

INDEX TO CALTRANS STANDARD PLANS (2015)

A1A	ABBREVIATIONS (SHEET 1 OF 3)
A1B	ABBREVIATIONS (SHEET 2 OF 3)
A1C	ABBREVIATIONS (SHEET 3 OF 3)
A10A	LEGEND LINES AND SYMBOLS (SHEET 1 OF 5)
B0-1	BRIDGE DETAILS
B0-3	BRIDGE DETAILS
B0-13	BRIDGE DETAILS
B3-5	RETAINING WALL DETAILS No. 1

GENERAL NOTES

1. ALL EXISTING FACILITIES, STRUCTURES, TREES, FENCES, LANDSCAPING, ETC., DESIGNATED "EXIST." OR SHOWN EXISTING (DASHED LINES) ARE TO REMAIN. ONLY THOSE SPECIFICALLY DESIGNATED FOR REMOVAL OR DEMOLITION AS SHOWN ON THE CIVIL DRAWINGS, OR AS DIRECTED BY THE ENGINEER MUST BE REMOVED.
2. ALL REFERENCES MADE TO RIGHT OR LEFT AND ALL CROSS-SECTIONS SHOWN ON THE PLANS ARE VIEWED LOOKING UPSTREAM/UPSTATION.
3. LOCATIONS AND DEPTHS OF EXISTING UNDERGROUND UTILITIES AS SHOWN ON THE PLANS ARE BASED ON INFORMATION FROM THE UTILITY AND ARE TO BE CONSIDERED AS APPROXIMATE ONLY.
4. PRIOR TO PERFORMING ANY WORK IN THE VICINITY OF EXISTING UNDERGROUND UTILITIES, THE CONTRACTOR MUST VERIFY THEIR LOCATIONS AND DEPTHS AND TAKE PROPER PRECAUTIONS TO AVOID ANY DAMAGE TO THEM.
5. THE CONTRACTOR VEHICLES SHALL NOT PARK ALONG THE LEVEE ACCESS ROAD AT ANY TIME. AND CONSTRUCTION OPERATIONS MUST BE CONDUCTED IN SUCH A MANNER AS TO CAUSE AS LITTLE INCONVENIENCE AS POSSIBLE TO THE RESIDENTS.
6. THE CONTRACTOR MUST INSTALL TEMPORARY FENCES AND OTHER WARNING SIGNS OR DEVICES PER SPECIFICATIONS.
7. SEE SPECIFICATIONS FOR THE RELEVANT GEOTECHNICAL DATA AND SOILS OF BORINGS.
8. IN CURVED SEGMENTS, TRANSVERSE REINFORCEMENT MUST BE PLACED RADIAL TO THE WALL LAYOUT LINE WITH THE SPACING TO BE APPLIED AT THE OUTSIDE OF THE CURVE UNLESS NOTED OTHERWISE ON THE DRAWINGS.
9. CONTRACTOR MUST FIELD VERIFY ALL LAYOUTS, EXISTING CONSTRUCTION AND CONTROLLING FIELD DIMENSIONS PRIOR TO ORDERING OR FABRICATING ANY MATERIALS.
10. SEE CIVIL AND GENERAL SHEETS FOR ADDITIONAL INFORMATION NOT NOTED ON PLANS.

LEGEND:

B0-13 / 15-4 — INDICATES STATE OF CALIFORNIA STANDARD PLAN SHEET NUMBER

INDICATES EXISTING STRUCTURE

INDICATES STRUCTURE REMOVAL (PORTION)

USERNAME: JCL Wed 23 Dec 2020 02:52pm
FILENAME: W:\2016\2016135\task_01-&-02-Lower_Calera_Crk\20161135541

DOCUMENT NUMBER: CAE_CY-S-4018-66001

REV	DESCRIPTION	DATE	APPR.	REFERENCE INFORMATION AND NOTES

BIGGS CARDOSA ASSOCIATES INC
STRUCTURAL ENGINEERS
BCA
865 The Alameda
San Jose, California 95126
408-296-5515

DATE	ENGINEERING CERTIFICATION
11/1/19	REGISTERED PROFESSIONAL ENGINEER MAHMASH M ADAMS No. 2639 Exp. 12/31/22 STRUCTURAL CALIFORNIA
DESIGN G. TOLAN	
DRAWN D. MANCINI	
CHECKED D. DEVLIN	11/1/19 PROJECT ENGINEER DATE

SANTA CLARA VALLEY WATER DISTRICT
Valley Water
PROJECT ENGINEER Karl Nemr DATE 12/30/20

PROJECT NAME AND SHEET DESCRIPTION:
LOWER CALERA CREEK FLOOD PROTECTION PROJECT
GENERAL NOTES

SCALE: AS SHOWN
VERIFY SCALES: 0 1"
BAR IS ONE INCH ON ORIGINAL DRAWING IF NOT ONE INCH ON THIS SHEET, ADJUST SCALES ACCORDINGLY

PROJECT NUMBER: 40174005
SHEET CODE: S-41
PAGE NUMBER: 98 OF 144

Attachment 4
Page 96 of 144

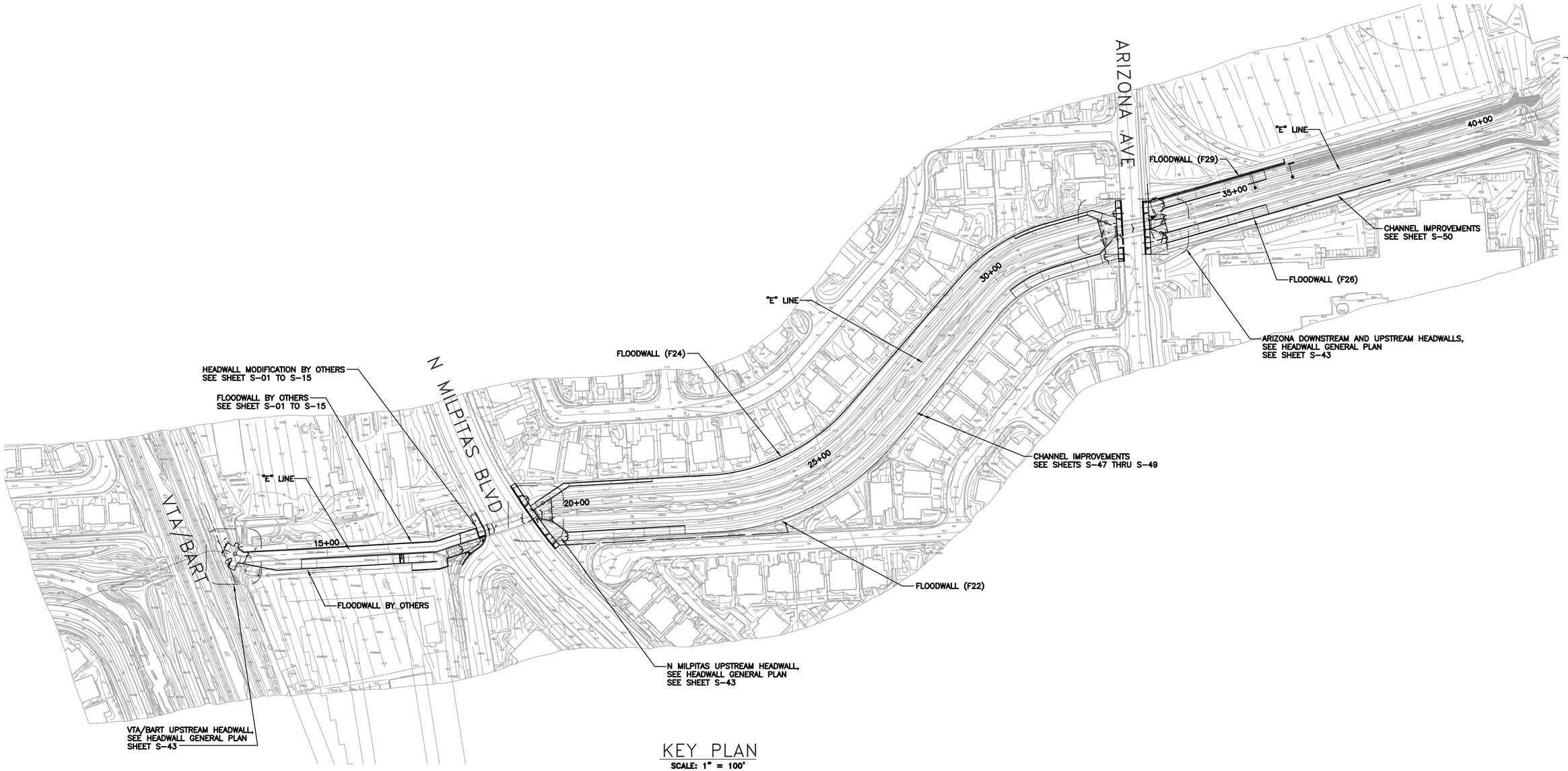

KEY PLAN

SCALE: 1" = 100'

USERNAME: JCL Wed 23 Dec 2020 02:52pm
FILENAME: W:\2016\2016135\task_01-&-02-Lower_Calera_Crk\20161355S42

DOCUMENT NUMBER: CAE_CY-S-4018-66002

REV	DESCRIPTION	DATE	APPR.	REFERENCE INFORMATION AND NOTES

BIGGS CARDOSA ASSOCIATES INC
STRUCTURAL ENGINEERS
BCA
865 The Alameda
San Jose, California 95126
408-296-5515

DATE	12/22/20
DESIGN	G. TOLAN
DRAWN	D. MANCINI
CHECKED	D. DEVLIN

ENGINEERING CERTIFICATION
REGISTERED PROFESSIONAL ENGINEER MAHNAZ M. HERMAN No. 2639 Exp. 12/31/22 CIVIL STATE OF CALIFORNIA
PROJECT ENGINEER — DATE 12/22/20

SANTA CLARA VALLEY WATER DISTRICT
Valley Water
PROJECT ENGINEER — DATE 12/30/20

PROJECT NAME AND SHEET DESCRIPTION:
LOWER CALERA CREEK
FLOOD PROTECTION PROJECT
KEY PLAN

SCALE: AS SHOWN
VERIFY SCALES: 0 — 1"
BAR IS ONE INCH ON ORIGINAL DRAWING
IF NOT ONE INCH ON THIS SHEET, ADJUST SCALES ACCORDINGLY

PROJECT NUMBER: 40174005
SHEET CODE: S-42
PAGE NUMBER: 97 OF 144

Attachment 4
Page 97 of 144

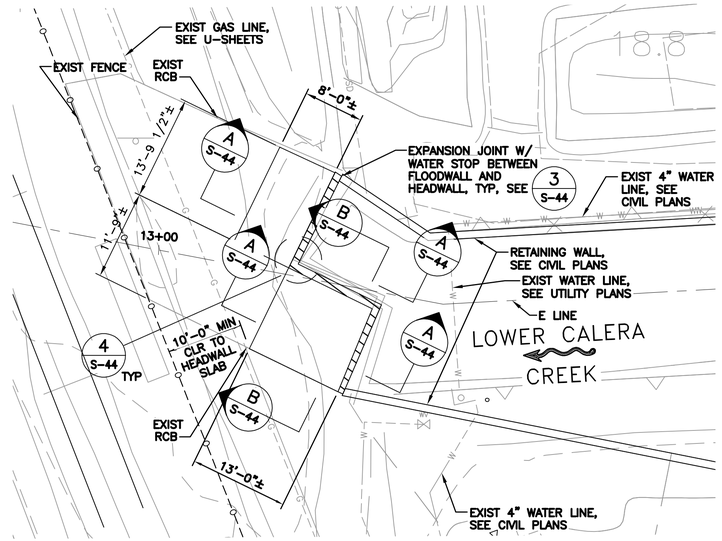

VTA/BART UPSTREAM HEADWALL

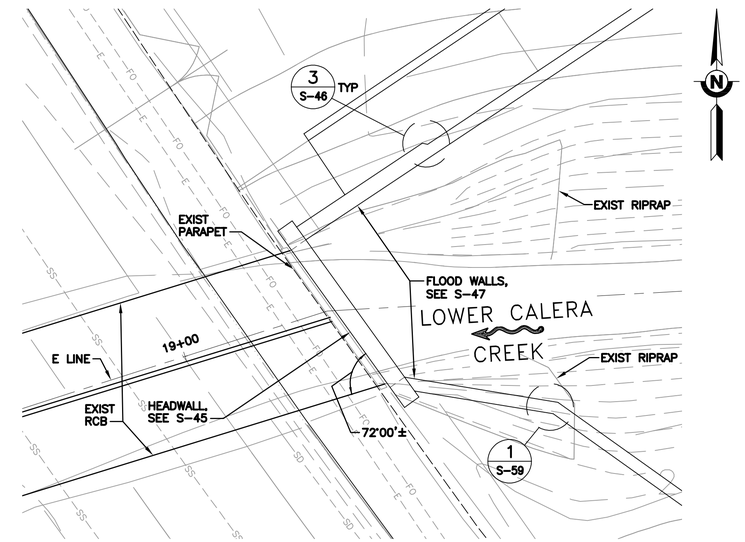

N MILPITAS UPSTREAM HEADWALL

PLAN
SCALE: 1" = 10'

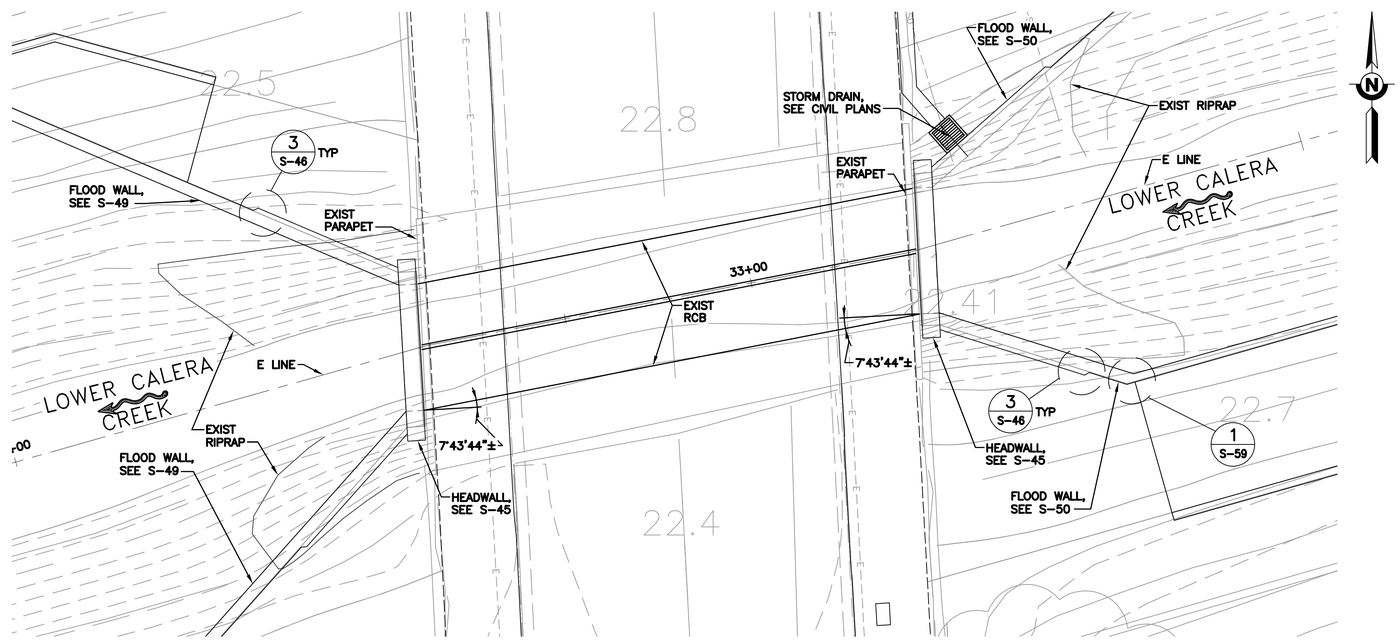

ARIZONA DOWNSTREAM HEADWALL

PLAN
SCALE: 1" = 10'

ARIZONA UPSTREAM HEADWALL

NOTE:

1. SEE CIVIL PLANS FOR ROCK SLOPE PROTECTION EXTENTS AND DETAILS.
2. WORK SHALL BE STAGED SO THAT ONLY ONE SIDEWALK ALONG ARIZONA AVE OR NORTH MILPITAS BLVD SHALL BE CLOSED AT ANY TIME.

REV	DESCRIPTION	DATE	APPR.	REFERENCE INFORMATION AND NOTES

BIGGS CARDOSA ASSOCIATES INC
STRUCTURAL ENGINEERS
BCA
865 The Alameda
San Jose, California 95126
408-296-5515

DATE 12/18/20
DESIGN G. TOLAN
DRAWN D. MANCINI
CHECKED D. DEVLIN

ENGINEERING CERTIFICATION
REGISTERED PROFESSIONAL ENGINEER MATTHEW W. HARRIS No. 2639 Exp. 12/31/22 STRUCTURAL CALIFORNIA
PROJECT ENGINEER 12/18/20 DATE

SANTA CLARA VALLEY WATER DISTRICT
Valley Water
PROJECT ENGINEER DATE 12/30/20

PROJECT NAME AND SHEET DESCRIPTION:
LOWER CALERA CREEK
FLOOD PROTECTION PROJECT
HEADWALL GENERAL PLAN

SCALE: AS SHOWN
VERIFY SCALES: 0 1"
BAR IS ONE INCH ON ORIGINAL DRAWING IF NOT ONE INCH ON THIS SHEET, ADJUST SCALES ACCORDINGLY

PROJECT NUMBER: 40174005
SHEET CODE: S-43
PAGE NUMBER: 98 OF 144

USERNAME: JCL Wed 23 Dec 2020 02:53pm
FILENAME: W:\2016\2016135\task_01-&-02-Lower_Calera_Crk\20161355S43
DOCUMENT NUMBER: CAE_CY-S-4018-66003

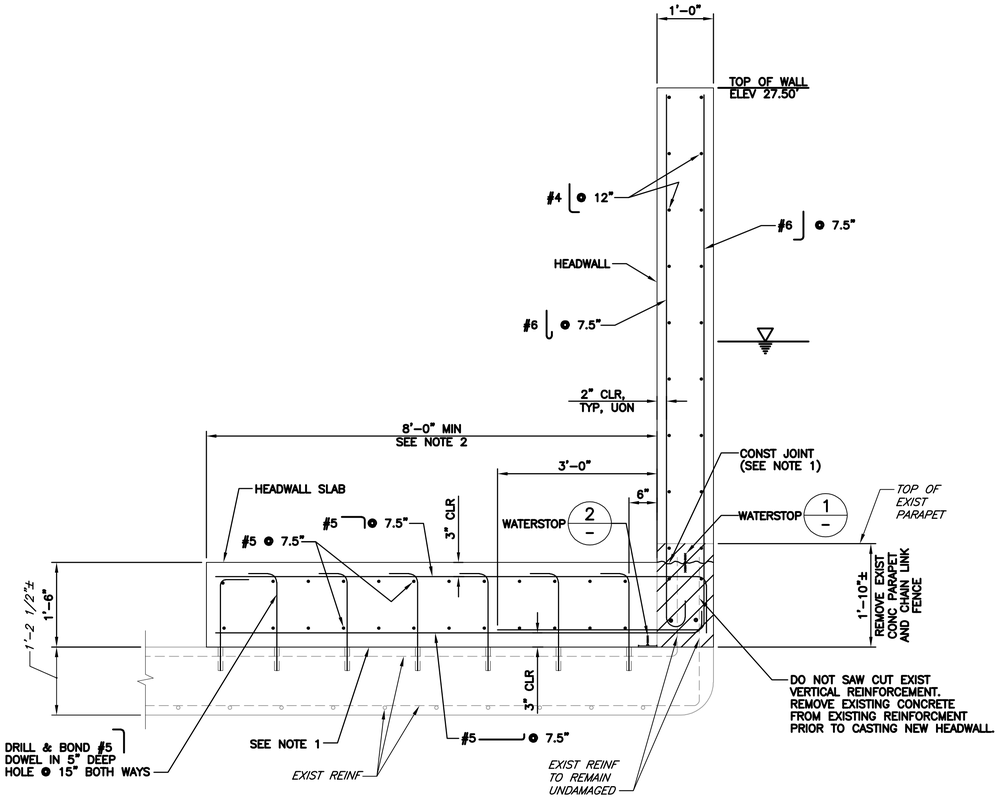

SECTION A S-43 VTA/BART UPSTREAM HEADWALL

SCALE: 3/4" = 1'-0"

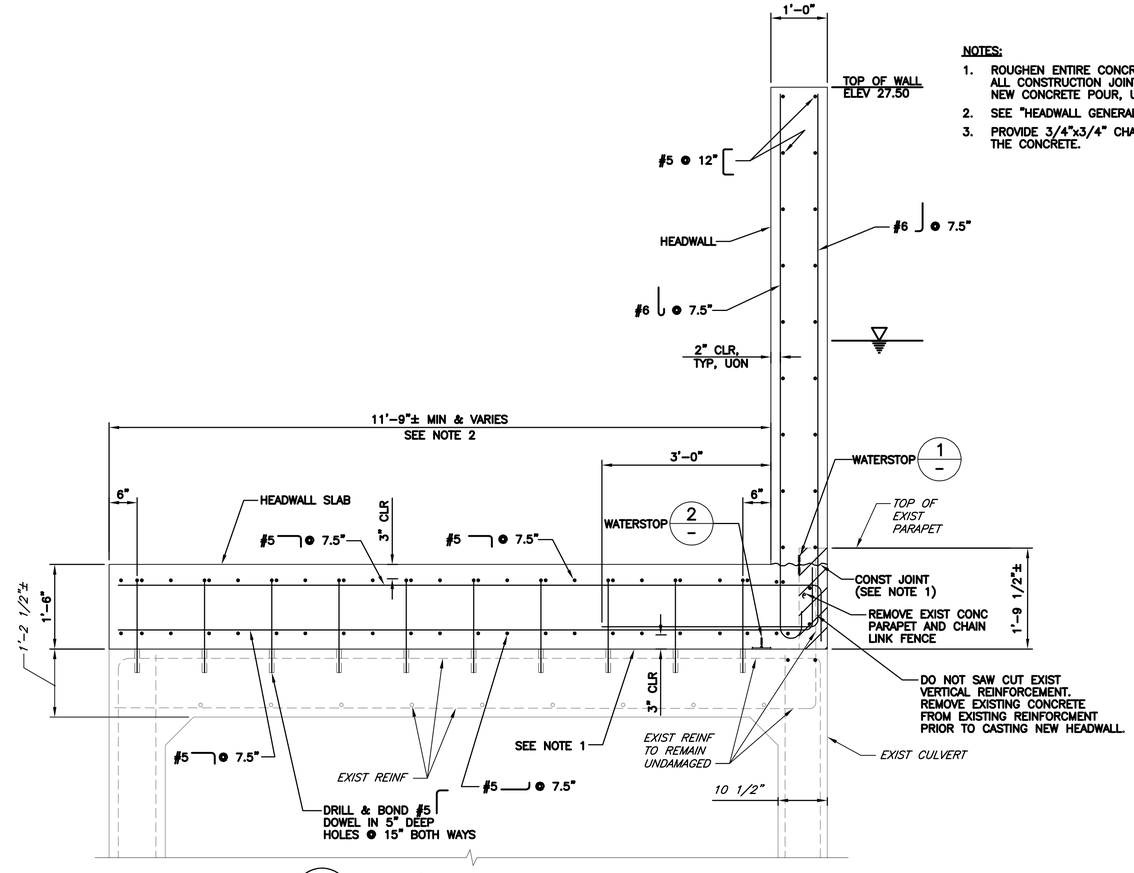

SECTION B S-43 VTA/BART UPSTREAM HEADWALL

SCALE: 3/4" = 1'-0"

NOTES:

1. ROUGHEN ENTIRE CONCRETE SURFACE TO 1/8" AMPLITUDE AT ALL CONSTRUCTION JOINTS AND EXISTING CONCRETE PRIOR TO NEW CONCRETE POUR, UNLESS OTHERWISE NOTED.
2. SEE "HEADWALL GENERAL PLAN" SHEET FOR LIMITS.
3. PROVIDE 3/4"x3/4" CHAMFERS AT ALL SHARP EDGES OF THE CONCRETE.

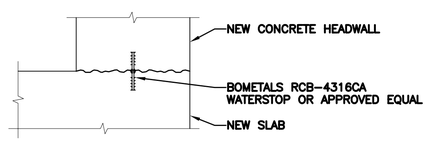

DETAIL 1 – WATERSTOP

S-45 S-46

SCALE: 1-1/2" = 1'-0"

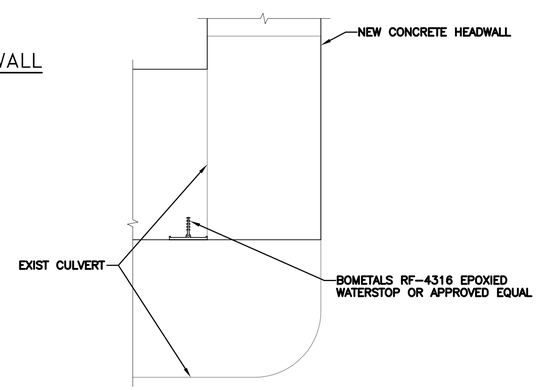

DETAIL 2 – WATERSTOP

S-45 S-46

SCALE: 1-1/2" = 1'-0"

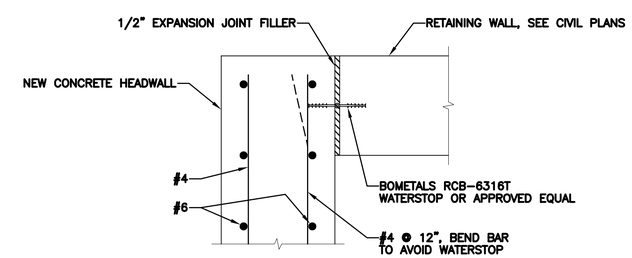

DETAIL 3 S-43 WATERSTOP

SCALE: 1-1/2" = 1'-0"

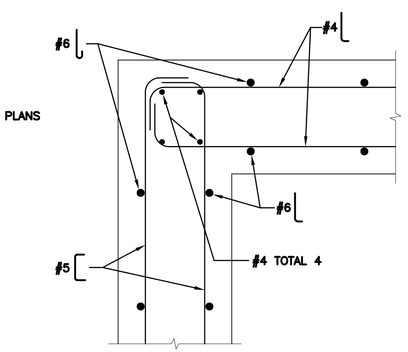

DETAIL 4 S-43 HEADWALL CORNER

SCALE: 1-1/2" = 1'-0"

THE CONTRACTOR MUST VERIFY ALL CONTROLLING FIELD DIMENSIONS BEFORE ORDERING OR FABRICATING ANY MATERIAL.

REV	DESCRIPTION	DATE	APPR.	REFERENCE INFORMATION AND NOTES

BIGGS CARDOSA ASSOCIATES INC
STRUCTURAL ENGINEERS
865 The Alameda
San Jose, California 95126
408-296-5515

DATE 12/18/20
DESIGN G. TOLAN
DRAWN D. MANCINI
CHECKED D. DEVLIN

ENGINEERING CERTIFICATION
REGISTERED PROFESSIONAL ENGINEER MAHVASH M. MAHMOODI No. 2639 Exp. 12/31/22 CIVIL STATE OF CALIFORNIA
PROJECT ENGINEER 12/18/20 DATE

SANTA CLARA VALLEY WATER DISTRICT
Valley Water
PROJECT ENGINEER DATE 12/30/20

PROJECT NAME AND SHEET DESCRIPTION:
LOWER CALERA CREEK FLOOD PROTECTION PROJECT
UPRR HEADWALL EXTENSIONS

SCALE: AS SHOWN
PROJECT NUMBER: 40174005
VERIFY SCALES: 0 1" BAR IS ONE INCH ON ORIGINAL DRAWING IF NOT ONE INCH ON THIS SHEET, ADJUST SCALES ACCORDINGLY
SHEET CODE: S-44
PAGE NUMBER: 99 OF 144

DOCUMENT NUMBER: CAE_CY-S-4018-66004
USERNAME: JCL Wed 23 Dec 2020 02:53pm
FILENAME: W:\2016\201613S\task_01-&-02-Lower_Calera_Crk\201613S544

NOTE:
1. SEE NOTES ON S-44.

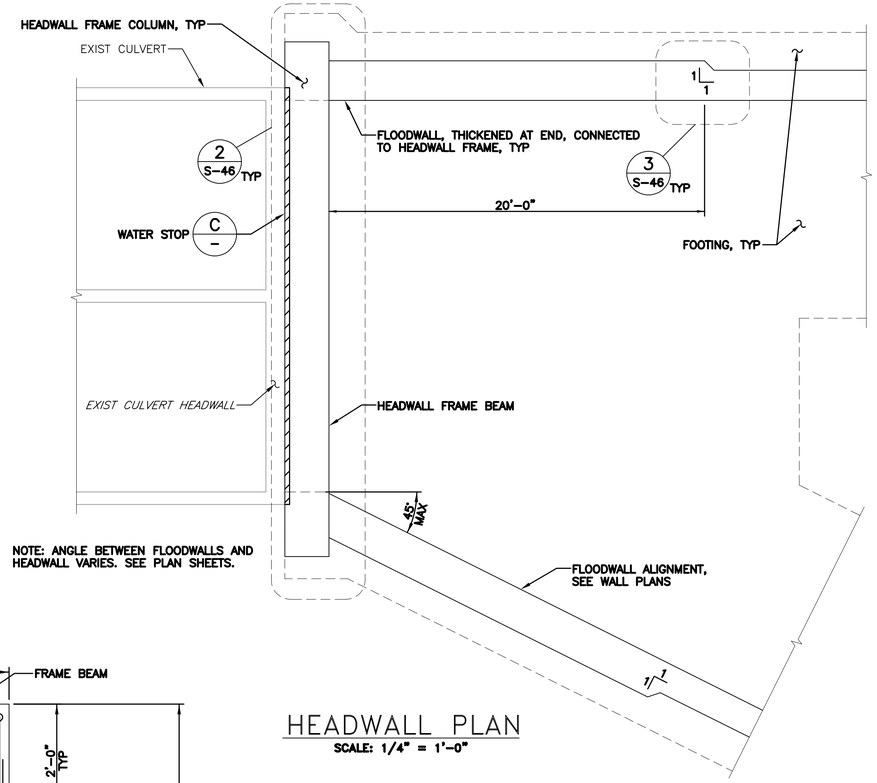

HEADWALL PLAN
SCALE: 1/4" = 1'-0"

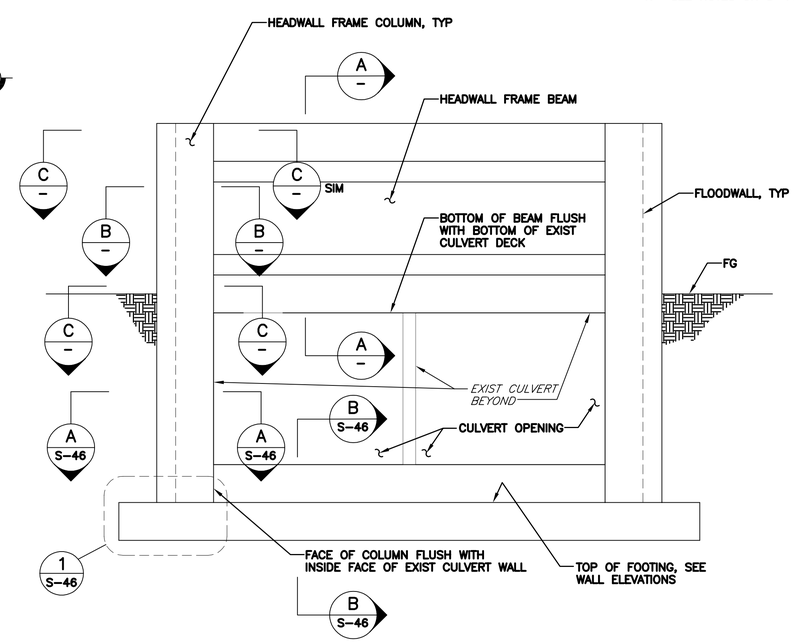

HEADWALL ELEVATION
SCALE: 1/4" = 1'-0"

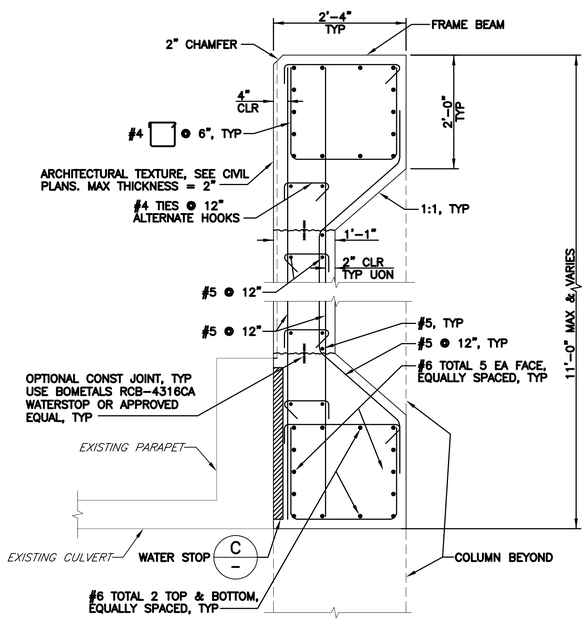

SECTION A HEADWALL FRAME BEAM
SCALE: 3/4" = 1'-0"

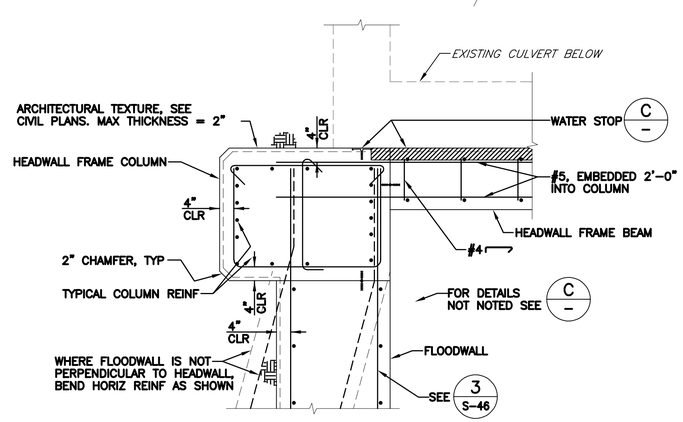

SECTION B HEADWALL FRAME COLUMN
SCALE: 3/4" = 1'-0"

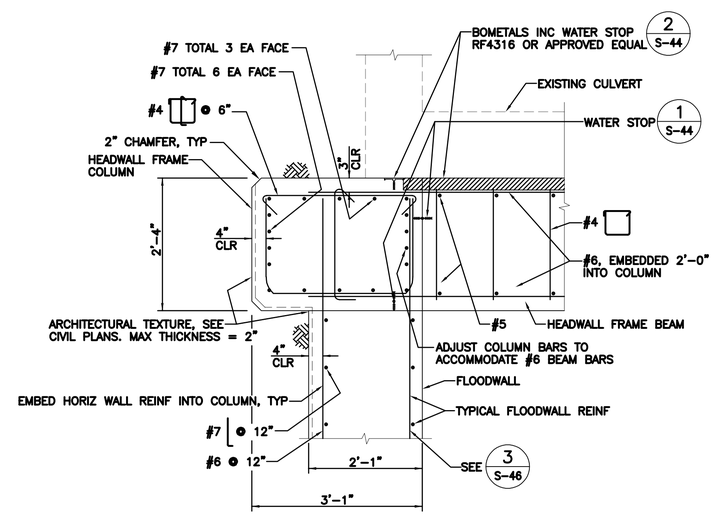

SECTION C HEADWALL FRAME COLUMN
SCALE: 3/4" = 1'-0"

REV	DESCRIPTION	DATE	APPR.	REFERENCE INFORMATION AND NOTES

BIGGS CARDOSA ASSOCIATES INC
STRUCTURAL ENGINEERS
BCA
865 The Alameda
San Jose, California 95126
408-296-5515

DATE 11/1/19
DESIGN G. TOLAN
DRAWN D. MANCINI
CHECKED D. DEVLIN

ENGINEERING CERTIFICATION
REGISTERED PROFESSIONAL ENGINEER MAHESH M PARMEKER No. 2639 Exp. 12/31/22 CIVIL STRUCTURAL CALIFORNIA
PROJECT ENGINEER 11/1/19 DATE

SANTA CLARA VALLEY WATER DISTRICT
Valley Water
PROJECT ENGINEER
DATE 12/30/20

PROJECT NAME AND SHEET DESCRIPTION:
LOWER CALERA CREEK FLOOD PROTECTION PROJECT
HEADWALL DETAILS NO 1

SCALE: AS SHOWN
VERIFY SCALES 0 1"
BAR IS ONE INCH ON ORIGINAL DRAWING IF NOT ONE INCH ON THIS SHEET, ADJUST SCALES ACCORDINGLY

PROJECT NUMBER: 40174005
SHEET CODE: S-45
PAGE NUMBER: 100 OF 144

DOCUMENT NUMBER: CAE_CY-S-4018-66005
USERNAME: JCL Wed 23 Dec 2020 02:53pm
FILENAME: W:\2016\2016135\task_01-&-02-Lower_Calera_Crk\2016135545

Attachment 4
Page 100 of 144

NOTES:
1. SEE NOTES ON S-44.

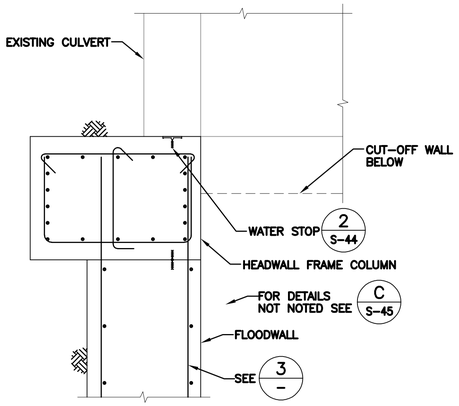

SECTION A S-45 HEADWALL FRAME COLUMN

SCALE: 3/4" = 1'-0"

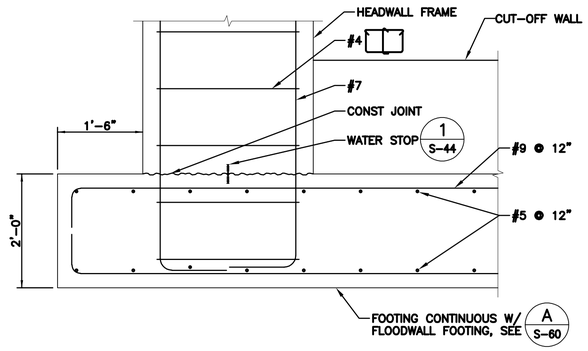

DETAIL 1 S-45 HEADWALL FRAME FOOTING

SCALE: 3/4" = 1'-0"

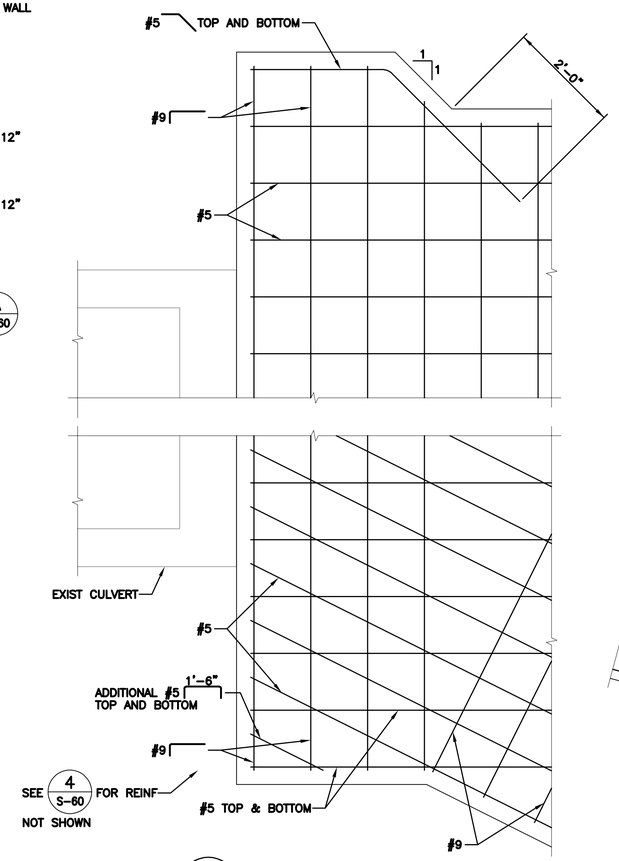

DETAIL 2 S-45 HEADWALL/FLOODWALL FOOTING

SCALE: 3/4" = 1'-0"

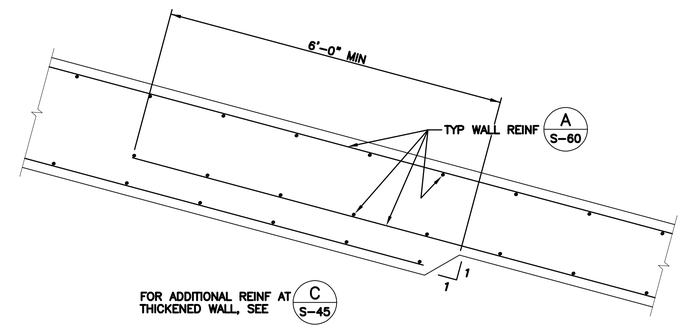

DETAIL 3 S-43 THICKENED WALL TRANSITION

S-45 SCALE: 3/4" = 1'-0"

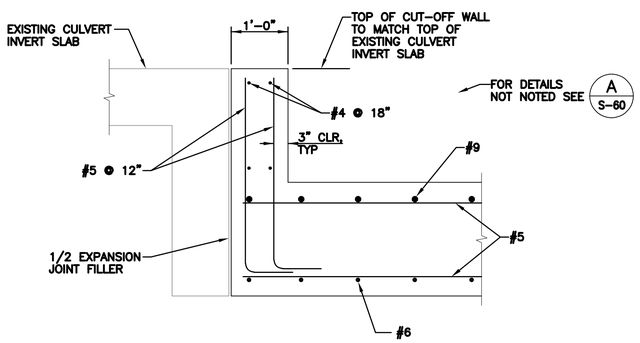

SECTION B S-45 CUTOFF WALL

SCALE: 3/4" = 1'-0"

USERNAME: JCL Wed 23 Dec 2020 02:53pm
FILENAME: W:\2016\2016135\task_01-&-02-Lower_Calera_Crk\20161355546

DOCUMENT NUMBER: CAE_CY-S-4018-66006

REV	DESCRIPTION	DATE	APPR.	REFERENCE INFORMATION AND NOTES

BIGGS CARDOSA ASSOCIATES INC
STRUCTURAL ENGINEERS
BCA
865 The Alameda
San Jose, California 95126
408-296-5515

DATE 11/1/19
DESIGN G. TOLAN
DRAWN D. MANCINI
CHECKED D. DEVLIN

ENGINEERING CERTIFICATION
REGISTERED PROFESSIONAL ENGINEER MAHESH M. PARMAR No. 2639 Exp. 12/31/22 CIVIL STRUCTURAL STATE OF CALIFORNIA
PROJECT ENGINEER 11/1/19 DATE

SANTA CLARA VALLEY WATER DISTRICT
Valley Water
PROJECT ENGINEER DATE 12/30/20

PROJECT NAME AND SHEET DESCRIPTION:
LOWER CALERA CREEK
FLOOD PROTECTION PROJECT
HEADWALL DETAILS NO 2

SCALE: AS SHOWN
VERIFY SCALES 0 1"
BAR IS ONE INCH ON ORIGINAL DRAWING IF NOT ONE INCH ON THIS SHEET, ADJUST SCALES ACCORDINGLY

PROJECT NUMBER: 40174005
SHEET CODE: S-46
PAGE NUMBER: 101 OF 144

NOTES:

1. SEE "CIVIL PLANS" FOR ADDITIONAL LAYOUT AND PROFILE INFORMATION NOT NOTED.
2. SEE "CIVIL PLANS" FOR EXISTING UTILITY SIZES, LOCATIONS AND ELEVATIONS.
3. SEE SHEETS S-51 THROUGH S-58 FOR ALL WALL ELEVATIONS.
4. SEE CIVIL PLANS FOR ROCK SLOPE PROTECTION.
5. FOR THE INBOARD FLOODWALLS, STATIONS SHOWN ARE BASED ON PERPENDICULAR PROJECTIONS FROM THE OUTBOARD FW LAYOUT LINES – FW22 LOL, FW24 LOL, FW26 LOL, AND FW29 LOL.
6. FOR THE INBOARD FLOODWALLS, THE STATION OFFSETS SHOWN ARE OFFSET FROM THE 'E' LINE. STATION OFFSETS FROM THE FW LINES ARE NOT SHOWN FOR CLARITY.
7. THE "E1" LINE SHALL MAINTAIN THE BEARING OF THE "E" LINE THROUGH THE EXISTING CULVERT, SEE "CIVIL PLANS" FOR "E" LINE BEARING.

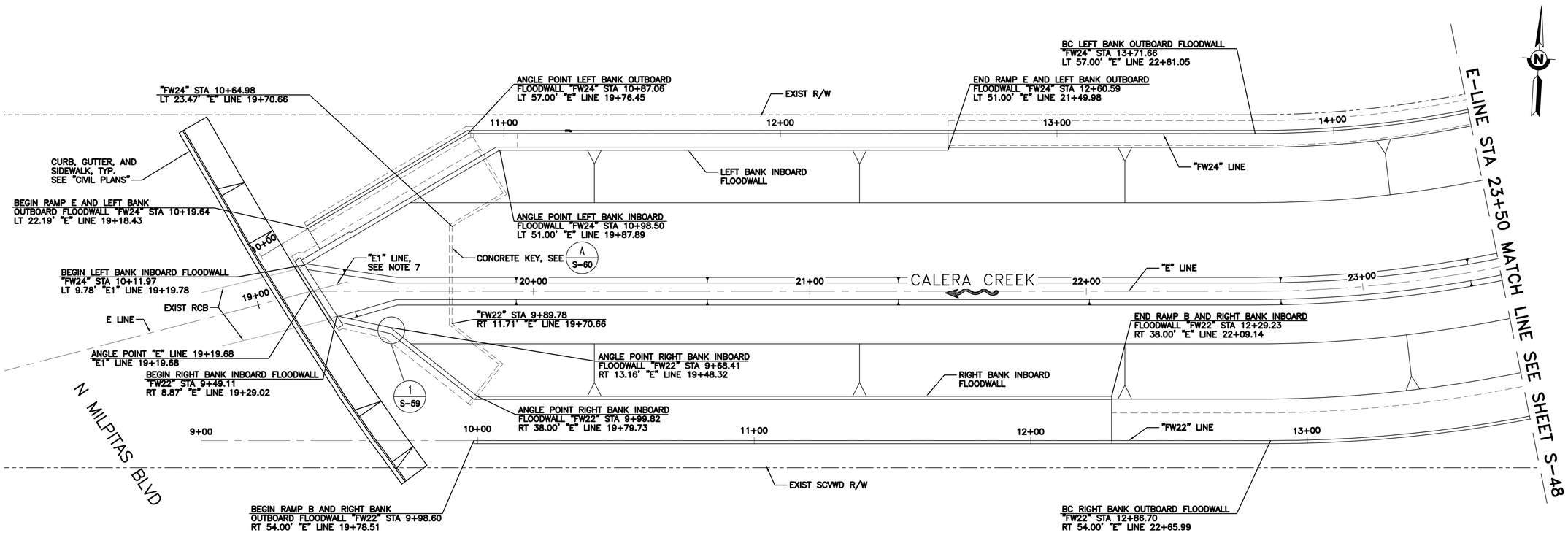

PLAN

SCALE: 1" = 20'

REV	DESCRIPTION	DATE	APPR.	REFERENCE INFORMATION AND NOTES

BIGGS CARDOSA ASSOCIATES INC
STRUCTURAL ENGINEERS
BCA
865 The Alameda
San Jose, California 95126
408-296-5515

DATE	12/11/20
DESIGN	G. TOLAN
DRAWN	D. MANCINI
CHECKED	D. DEVLIN

ENGINEERING CERTIFICATION
REGISTERED PROFESSIONAL ENGINEER MANJISH M. MERANDA No. 2639 Exp. 12/31/22 CIVIL STATE OF CALIFORNIA
PROJECT ENGINEER 12/11/20 DATE

SANTA CLARA VALLEY WATER DISTRICT
Valley Water
PROJECT ENGINEER DATE 12/30/20

PROJECT NAME AND SHEET DESCRIPTION:
LOWER CALERA CREEK
FLOOD PROTECTION PROJECT
FLOODWALL PLAN NO 1

SCALE	PROJECT NUMBER
AS SHOWN	40174005
VERIFY SCALES 0 1" BAR IS ONE INCH ON ORIGINAL DRAWING IF NOT ONE INCH ON THIS SHEET, ADJUST SCALES ACCORDINGLY	SHEET CODE: S-47
	PAGE NUMBER: 102 OF 144

USERNAME: JCL Wed 23 Dec 2020 02:53pm
FILENAME: W:\2016\2016135\task_01-&-02-Lower_Calera_Crk\20161355 47
DOCUMENT NUMBER: CAE_CY-S-4018-66007

NOTE:
1. SEE NOTES ON S-47.

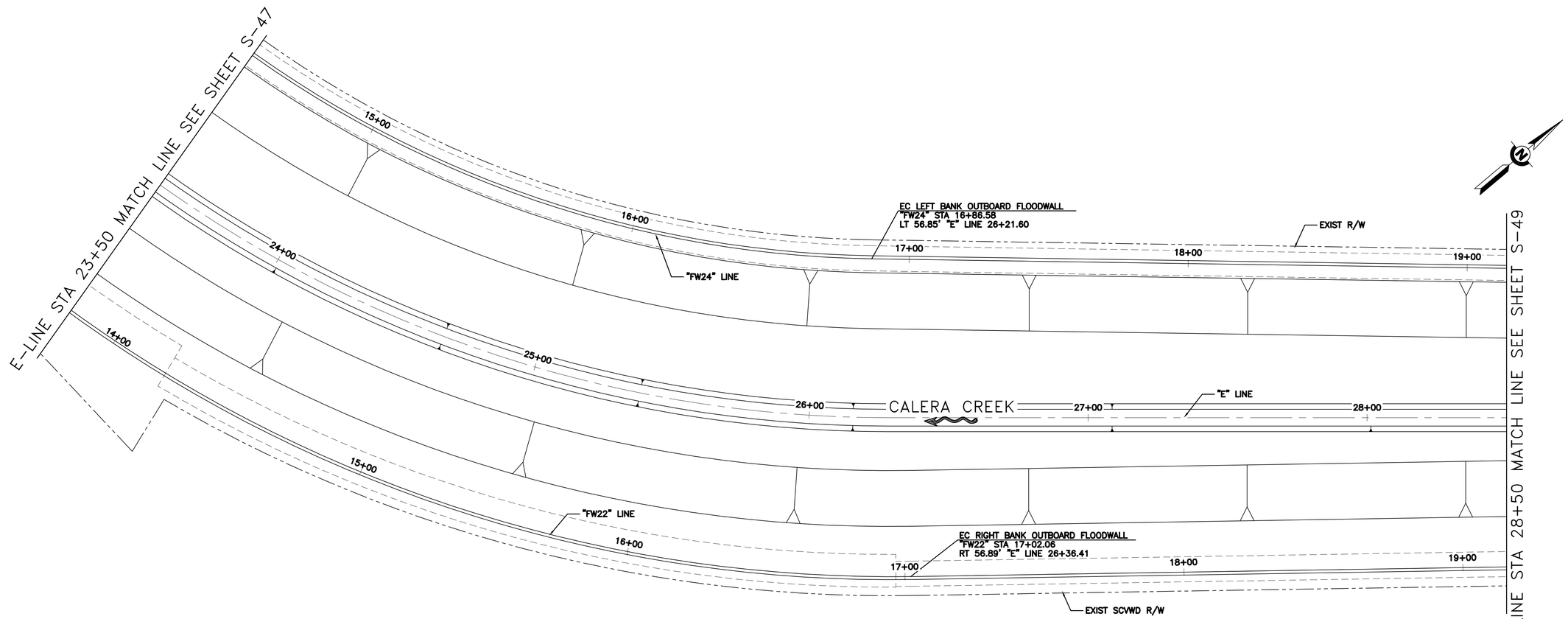

PLAN
SCALE: 1" = 20'

USERNAME: JCL Wed 23 Dec 2020 02:53pm
FILENAME: W:\2016\2016135\Task_01-&-02-Lower_Calera_Crk\2016135S48

DOCUMENT NUMBER: CAE_CY-S-4018-66008

REV	DESCRIPTION	DATE	APPR.	REFERENCE INFORMATION AND NOTES

BIGGS CARDOSA ASSOCIATES INC
STRUCTURAL ENGINEERS
865 The Alameda
San Jose, California 95126
408-296-5515

DATE 11/1/19
DESIGN G. TOLAN
DRAWN D. MANCINI
CHECKED D. DEVLIN

ENGINEERING CERTIFICATION
REGISTERED PROFESSIONAL ENGINEER MANVASH M HARMS No. 2639 Exp. 12/31/22 STATE OF CALIFORNIA
11/1/19
PROJECT ENGINEER DATE

SANTA CLARA VALLEY WATER DISTRICT
Valley Water
PROJECT ENGINEER DATE 12/30/20

PROJECT NAME AND SHEET DESCRIPTION:
LOWER CALERA CREEK
FLOOD PROTECTION PROJECT
FLOODWALL PLAN NO 2

SCALE AS SHOWN
VERIFY SCALES 0 1"
BAR IS ONE INCH ON ORIGINAL DRAWING IF NOT ONE INCH ON THIS SHEET, ADJUST SCALES ACCORDINGLY

PROJECT NUMBER 40174005
SHEET CODE: S-48
PAGE NUMBER: 103 OF 144

Attachment 4
Page 103 of 144

NOTE:
1. SEE NOTES ON S-47.

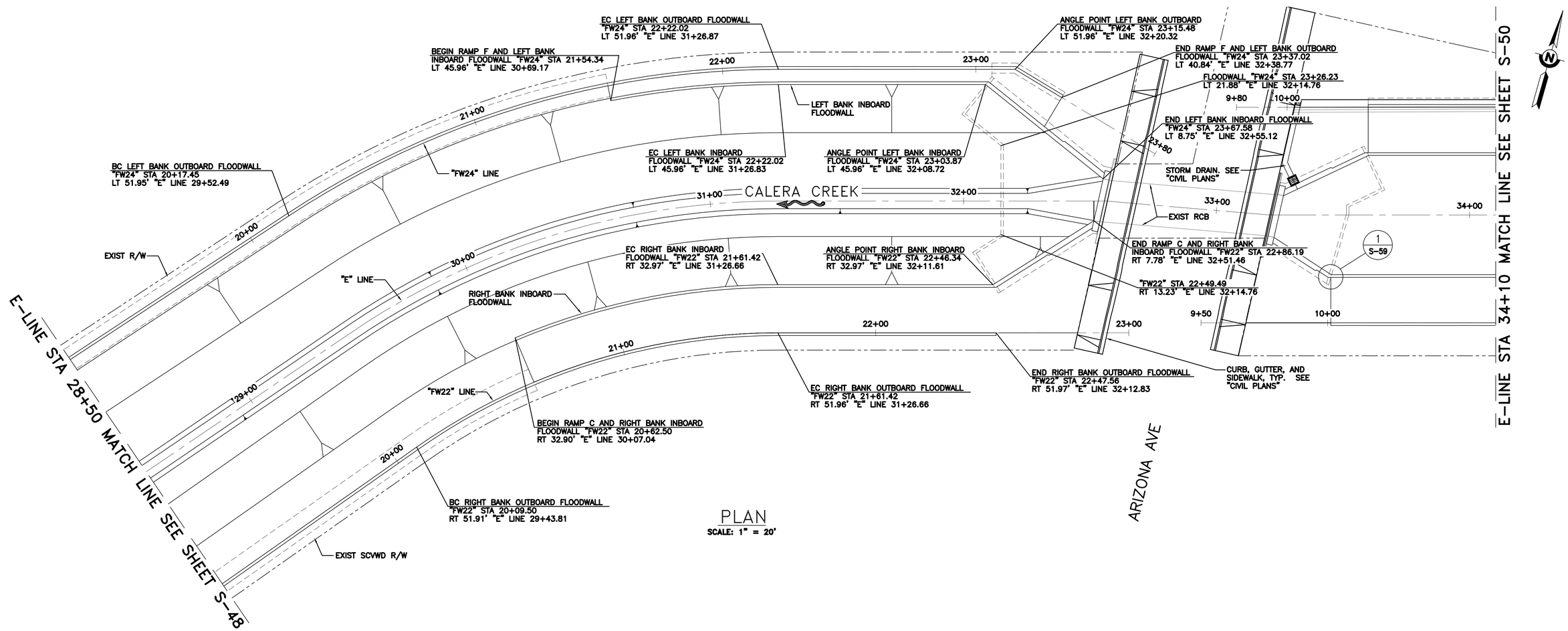

PLAN
SCALE: 1" = 20'

USERNAME: JCL Wed 23 Dec 2020 02:54pm
FILENAME: W:\2016\2016135\Task_01-&-02-Lower_Calera_Crk\2016135S49

DOCUMENT NUMBER: CAE_CY-S-4018-66009

REV	DESCRIPTION	DATE	APPR.	REFERENCE INFORMATION AND NOTES

BIGGS CARDOSA ASSOCIATES INC
STRUCTURAL ENGINEERS
865 The Alameda
San Jose, California 95126
408-296-5515

DATE 12/11/20
DESIGN G. TOLAN
DRAWN D. MANCINI
CHECKED D. DEVLIN

ENGINEERING CERTIFICATION
REGISTERED PROFESSIONAL ENGINEER MAHWASH M HAKIMI No. 2639 Exp. 12/31/22 STATE OF CALIFORNIA
PROJECT ENGINEER 12/11/20 DATE

SANTA CLARA VALLEY WATER DISTRICT
Valley Water
PROJECT ENGINEER DATE 12/30/20

PROJECT NAME AND SHEET DESCRIPTION:
LOWER CALERA CREEK
FLOOD PROTECTION PROJECT
FLOODWALL PLAN NO 3

SCALE AS SHOWN
VERIFY SCALES 0 1"
BAR IS ONE INCH ON ORIGINAL DRAWING IF NOT ONE INCH ON THIS SHEET, ADJUST SCALES ACCORDINGLY

PROJECT NUMBER 40174005
SHEET CODE: S-49
PAGE NUMBER: 104 OF 144

NOTE:
1. SEE NOTES ON S-47.

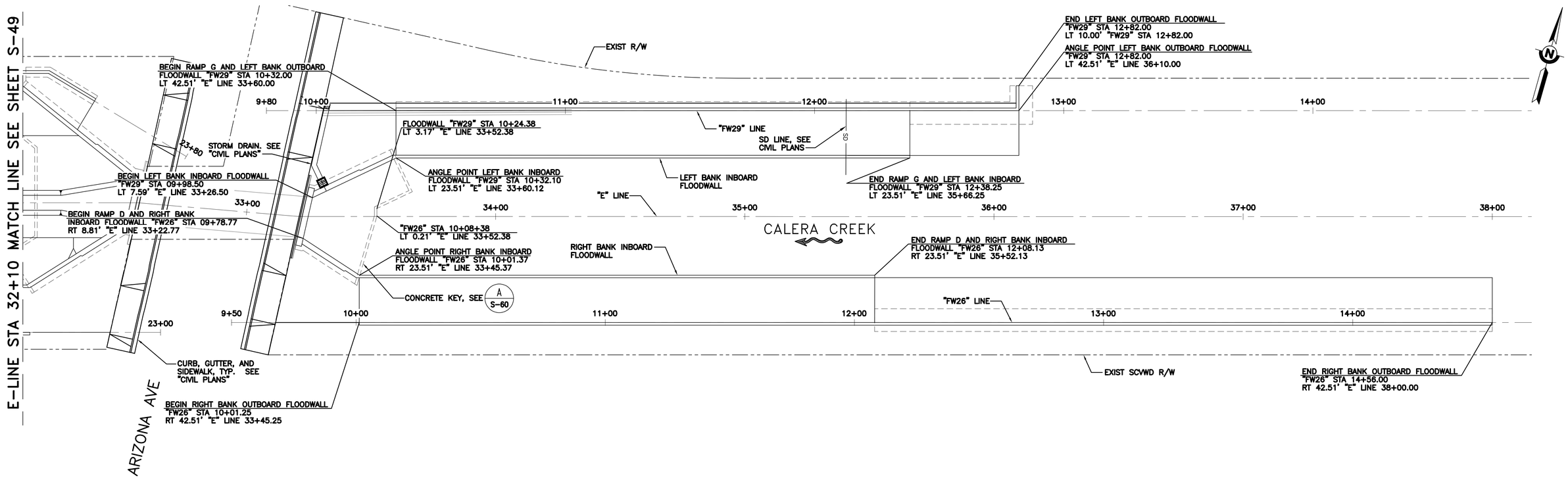

PLAN
SCALE: 1" = 20'

USERNAME: JCL Wed 23 Dec 2020 02:54pm
FILENAME: W:\2016\2016135\Task_01-&-02-Lower_Calera_Crk\2016135S50

DOCUMENT NUMBER: CAE_CY-S-4018-66010

REV	DESCRIPTION	DATE	APPR.	REFERENCE INFORMATION AND NOTES

BIGGS CARDOSA ASSOCIATES INC
STRUCTURAL ENGINEERS
865 The Alameda
San Jose, California 95126
408-296-5515

DATE 12/11/20
DESIGN G. TOLAN
DRAWN D. MANCINI
CHECKED D. DEVLIN

ENGINEERING CERTIFICATION
REGISTERED PROFESSIONAL ENGINEER MAHVASH M HARMS No. 2639 Exp. 12/31/22 STATE OF CALIFORNIA
12/11/20
PROJECT ENGINEER DATE

SANTA CLARA VALLEY WATER DISTRICT
Valley Water
PROJECT ENGINEER DATE 12/30/20

PROJECT NAME AND SHEET DESCRIPTION:
LOWER CALERA CREEK
FLOOD PROTECTION PROJECT
FLOODWALL PLAN NO 4

SCALE AS SHOWN
VERIFY SCALES 0 1"
BAR IS ONE INCH ON ORIGINAL DRAWING IF NOT ONE INCH ON THIS SHEET, ADJUST SCALES ACCORDINGLY

PROJECT NUMBER 40174005
SHEET CODE: S-50
PAGE NUMBER: 105 OF 144

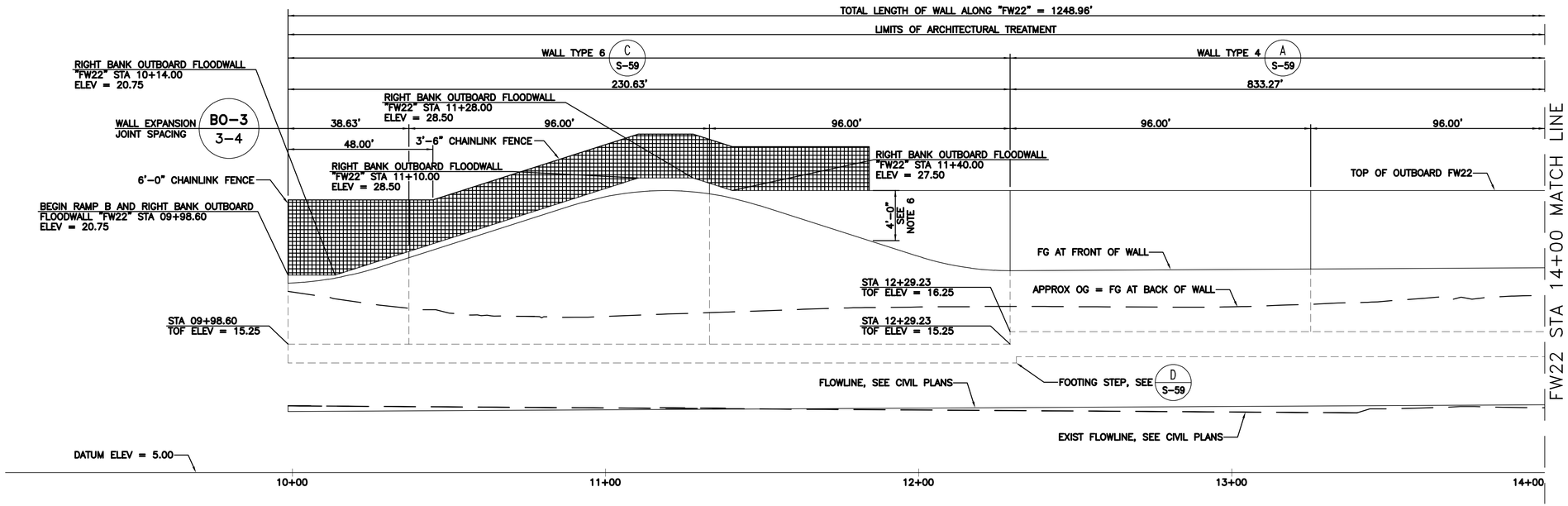

OUTBOARD FW22 WALL MIRRORED DEVELOPED ELEVATION

HORIZ SCALE: 1" = 20'
VERT SCALE: 1" = 5'

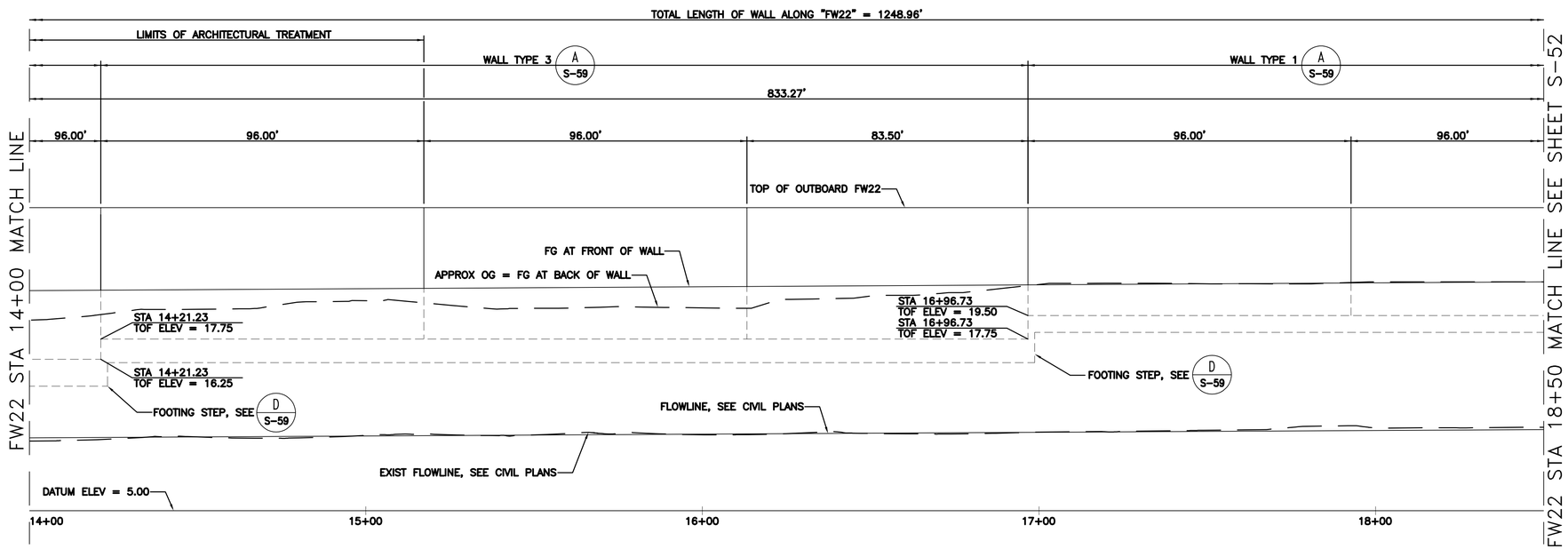

OUTBOARD FW22 WALL MIRRORED DEVELOPED ELEVATION

HORIZ SCALE: 1" = 20'
VERT SCALE: 1" = 5'

NOTES:

1. SEE "CIVIL PLANS" FOR ADDITIONAL LAYOUT AND PROFILE INFORMATION NOT NOTED.
2. SEE "CIVIL PLANS" FOR EXISTING UTILITY SIZES, LOCATIONS AND ELEVATIONS.
3. TOP OF WALL ELEVATIONS ARE LINEAR BETWEEN ELEVATION POINTS UNLESS OTHERWISE NOTED.
4. TOP OF FOOTING ELEVATIONS ARE LINEAR BETWEEN ELEVATION POINTS UNLESS OTHERWISE NOTED.
5. FOR SPACING OF WEAKENED PLANE JOINTS, SEE B0-3 / 3-3.
6. DIMENSION INDICATES MINIMUM DISTANCE BETWEEN TOP OF WALL AND FINISHED GRADE WHERE NO CHAIN LINK FENCE IS REQUIRED.

REV	DESCRIPTION	DATE	APPR.	REFERENCE INFORMATION AND NOTES

BIGGS CARDOSA ASSOCIATES INC
STRUCTURAL ENGINEERS
BCA
865 The Alameda
San Jose, California 95126
408-296-5515

DATE 10/13/20
DESIGN G. TOLAN
DRAWN D. MANCINI
CHECKED D. DEVLIN

ENGINEERING CERTIFICATION
REGISTERED PROFESSIONAL ENGINEER MAHESH M. PARMAR No. 2639 Exp. 12/31/22 CIVIL STATE OF CALIFORNIA
PROJECT ENGINEER 10/13/20 DATE

SANTA CLARA VALLEY WATER DISTRICT
Valley Water
PROJECT ENGINEER Karl Nem DATE 12/30/20

PROJECT NAME AND SHEET DESCRIPTION:
LOWER CALERA CREEK
FLOOD PROTECTION PROJECT
FLOODWALL ELEVATION NO 1

SCALE: AS SHOWN
VERIFY SCALES: 0 — 1"
BAR IS ONE INCH ON ORIGINAL DRAWING IF NOT ONE INCH ON THIS SHEET, ADJUST SCALES ACCORDINGLY

PROJECT NUMBER: 40174005
SHEET CODE: S-51
PAGE NUMBER: 106 OF 144

USERNAME: JCL Wed 23 Dec 2020 02:54pm
FILENAME: W:\2016\2016135\task_01-&-02-Lower_Calera_Crk\20161355S1
DOCUMENT NUMBER: CAE_CY-S-4018-66011

Attachment 4
Page 106 of 144

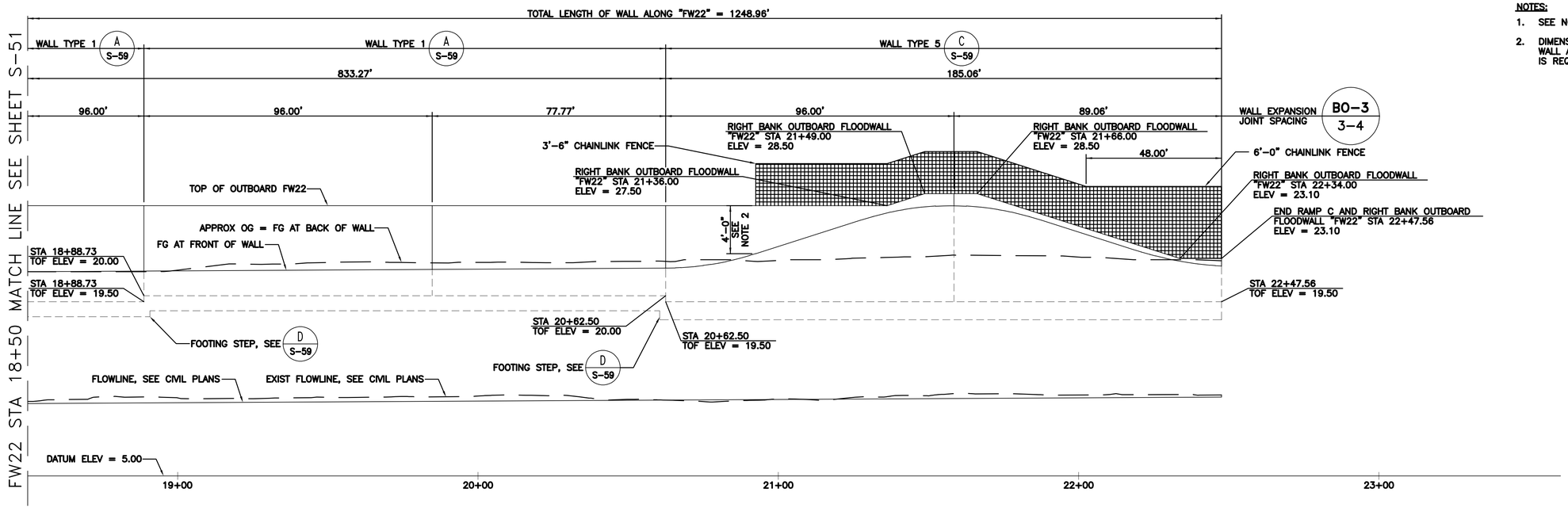

OUTBOARD FW22 WALL MIRRORED DEVELOPED ELEVATION

HORIZ SCALE: 1" = 20'
VERT SCALE: 1" = 5'

NOTES:

1. SEE NOTES ON S-51.
2. DIMENSION INDICATES MINIMUM DISTANCE BETWEEN TOP OF WALL AND FINISHED GRADE WHERE NO CHAIN LINK FENCE IS REQUIRED.

USERNAME: JCL Wed 23 Dec 2020 02:54pm
FILENAME: W:\2016\2016135\Task_01-&-02-Lower_Calera_Crk\2016135S52

DOCUMENT NUMBER: CAE_CY-S-4018-66012

REV	DESCRIPTION	DATE	APPR.	REFERENCE INFORMATION AND NOTES

BIGGS CARDOSA ASSOCIATES INC
STRUCTURAL ENGINEERS
865 The Alameda
San Jose, California 95126
408-296-5515

DATE 10/13/20
DESIGN G. TOLAN
DRAWN D. MANCINI
CHECKED D. DEVLIN

ENGINEERING CERTIFICATION
REGISTERED PROFESSIONAL ENGINEER MANVASH M HARMS No. 2639 Exp. 12/31/22 STATE OF CALIFORNIA
10/13/20
PROJECT ENGINEER DATE

SANTA CLARA VALLEY WATER DISTRICT
Valley Water
PROJECT ENGINEER DATE 12/30/20

PROJECT NAME AND SHEET DESCRIPTION:
LOWER CALERA CREEK
FLOOD PROTECTION PROJECT
FLOODWALL ELEVATION NO 2

SCALE AS SHOWN
VERIFY SCALES 0 1"
BAR IS ONE INCH ON ORIGINAL DRAWING IF NOT ONE INCH ON THIS SHEET, ADJUST SCALES ACCORDINGLY

PROJECT NUMBER 40174005
SHEET CODE: S-52
PAGE NUMBER: 107 OF 144

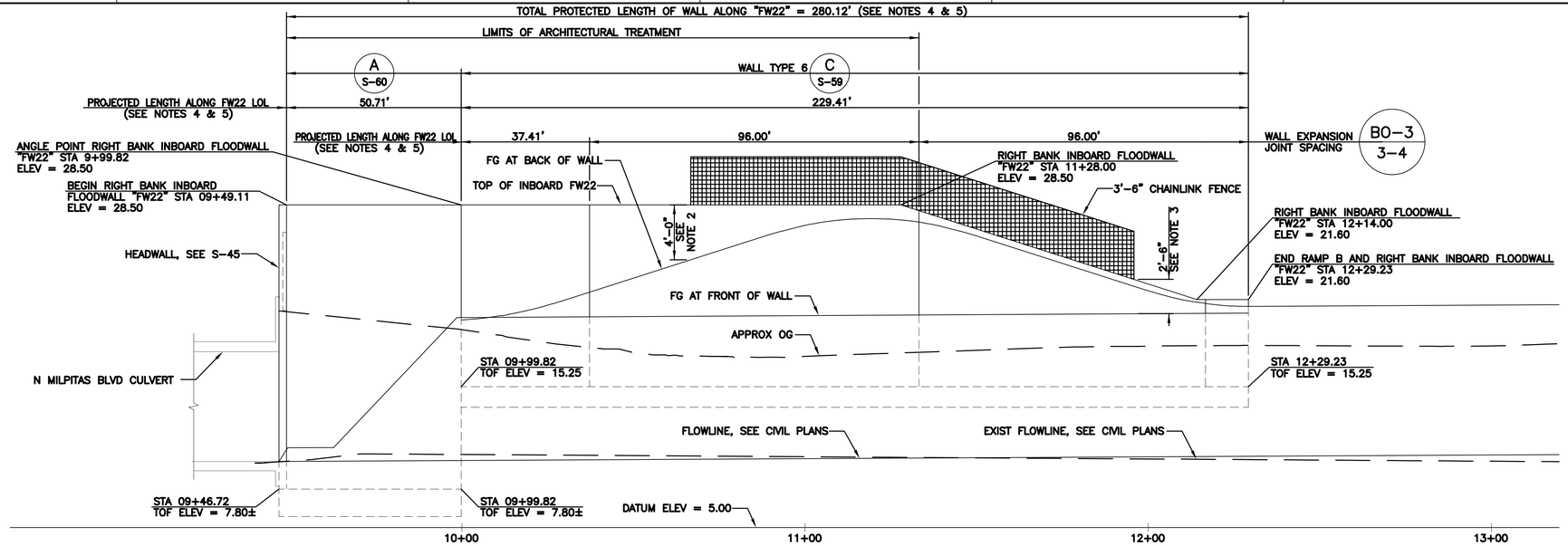

INBOARD FW22 WALL MIRRORED PROJECTED ELEVATION

HORIZ SCALE: 1" = 20'
VERT SCALE: 1" = 5'

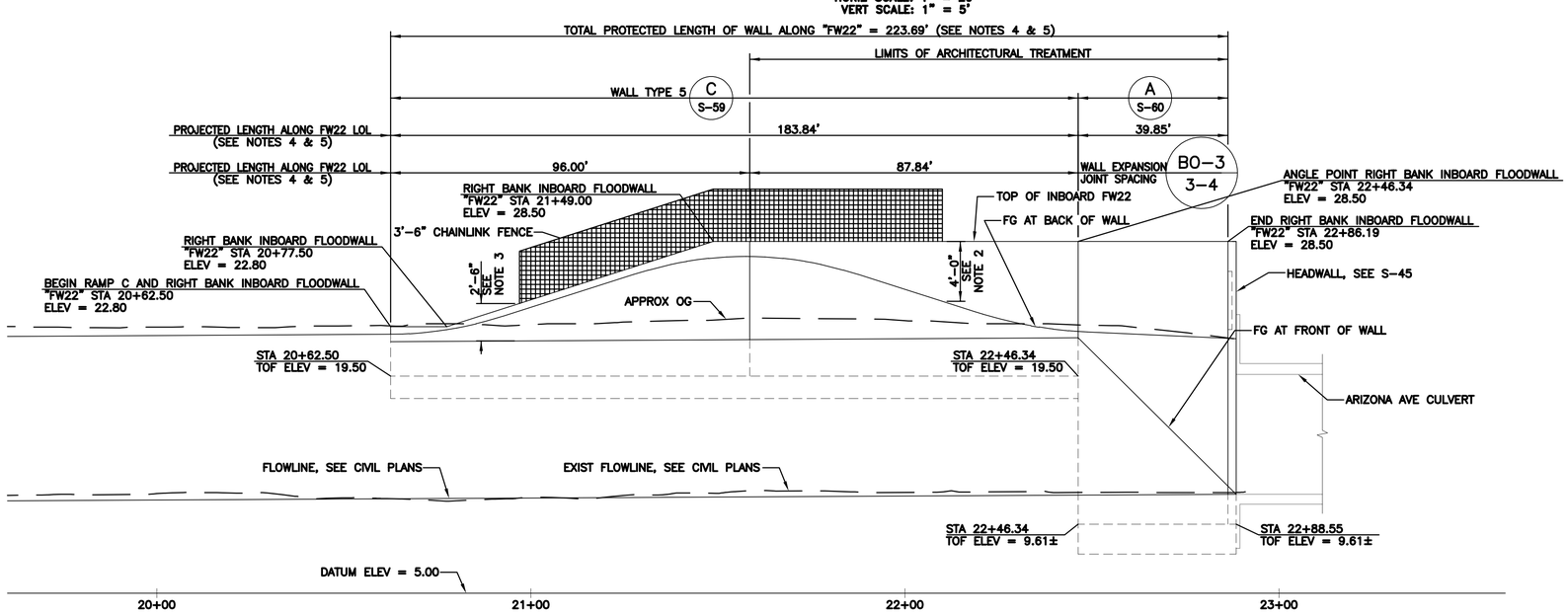

INBOARD FW22 WALL MIRRORED PROJECTED ELEVATION

HORIZ SCALE: 1" = 20'
VERT SCALE: 1" = 5'

NOTES:

1. SEE NOTES ON S-51.
2. DIMENSION INDICATES MINIMUM DISTANCE BETWEEN TOP OF WALL AND FINISHED GRADE WHERE NO CHAIN LINK FENCE IS REQUIRED.
3. DIMENSION INDICATES MAXIMUM DISTANCE BETWEEN TOP OF WALL AND FINISHED GRADE WHERE NO CHAIN LINK FENCE IS REQUIRED.
4. FOR THE INBOARD FLOODWALLS, STATIONS SHOWN ARE BASED ON PERPENDICULAR PROJECTION FROM FW22 LOL.
5. ACTUAL LENGTH ALONG FACE OF WALL MAY NOT MATCH LENGTH ALONG LOL, SEE PLAN.

REV	DESCRIPTION	DATE	APPR.	REFERENCE INFORMATION AND NOTES

BIGGS CARDOSA ASSOCIATES INC
STRUCTURAL ENGINEERS
865 The Alameda
San Jose, California 95126
408-296-5515

DATE 12/11/20
DESIGN G. TOLAN
DRAWN D. MANCINI
CHECKED D. DEVLIN

ENGINEERING CERTIFICATION
REGISTERED PROFESSIONAL ENGINEER MAHESH M. MORRIS No. 2639 Exp. 12/31/22 CIVIL STATE OF CALIFORNIA
12/11/20
PROJECT ENGINEER DATE

SANTA CLARA VALLEY WATER DISTRICT
Valley Water
PROJECT ENGINEER
DATE 12/30/20

PROJECT NAME AND SHEET DESCRIPTION:
LOWER CALERA CREEK FLOOD PROTECTION PROJECT
FLOODWALL ELEVATION NO 3

SCALE: AS SHOWN
VERIFY SCALES: 0 1"
BAR IS ONE INCH ON ORIGINAL DRAWING IF NOT ONE INCH ON THIS SHEET, ADJUST SCALES ACCORDINGLY
PROJECT NUMBER: 40174005
SHEET CODE: S-53
PAGE NUMBER: 108 OF 144

USERNAME: JCL Wed 23 Dec 2020 02:54pm
FILENAME: W:\2016\2016135\task_01-&-02-Lower_Calera_Crk\20161355S3
DOCUMENT NUMBER: CAE_CY-S-4018-66013

Attachment 4
Page 108 of 144

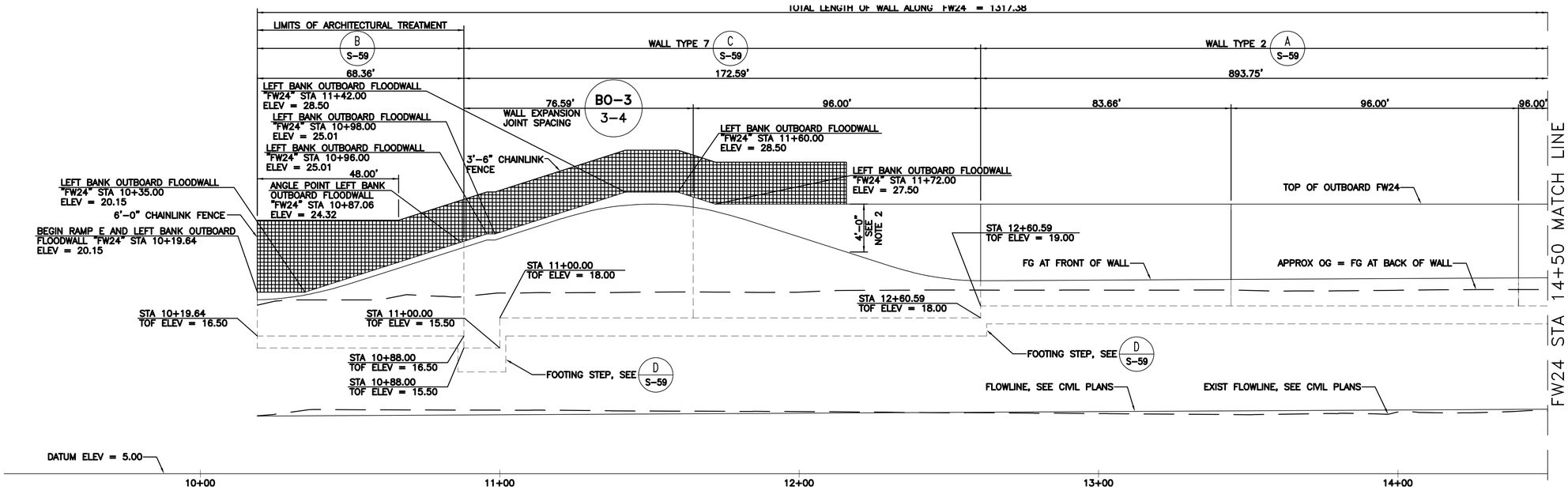

OUTBOARD FW24 WALL DEVELOPED ELEVATION

HORIZ SCALE: 1" = 20'
VERT SCALE: 1" = 5'

NOTES:

1. SEE NOTES ON S-51.
2. DIMENSION INDICATES MINIMUM DISTANCE BETWEEN TOP OF WALL AND FINISHED GRADE WHERE NO CHAIN LINK FENCE IS REQUIRED.

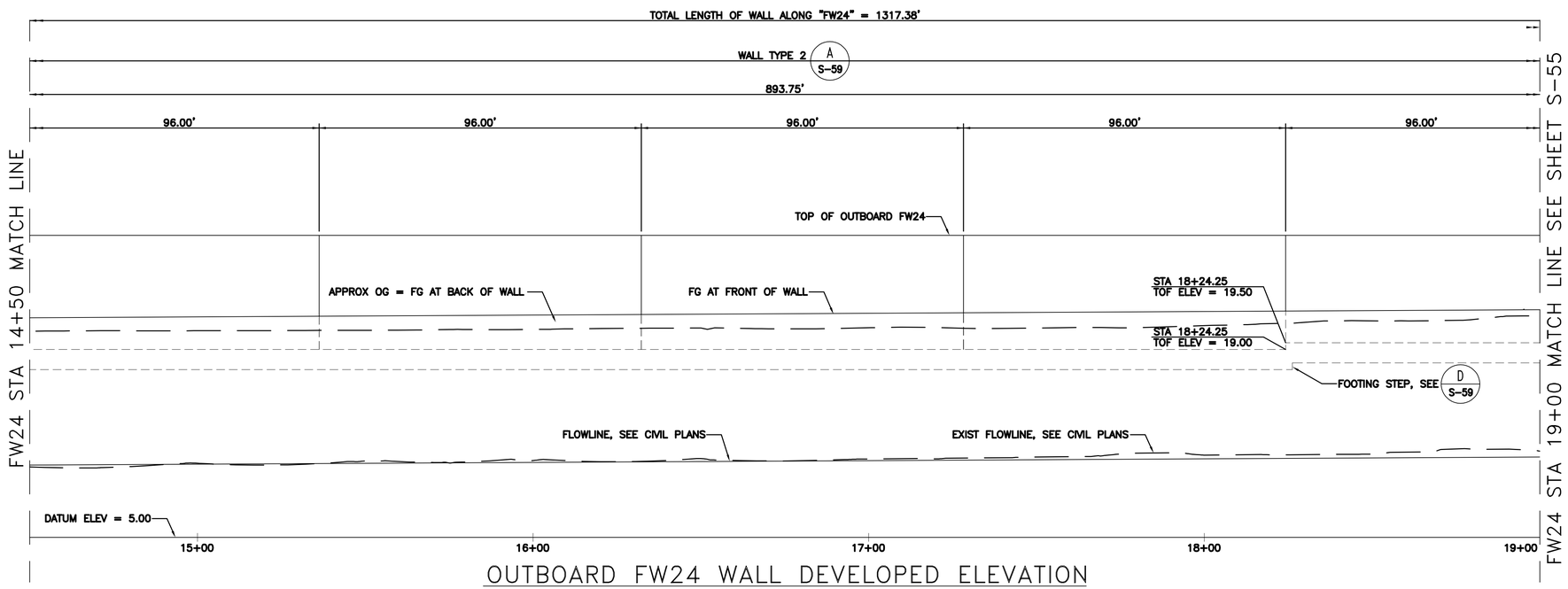

OUTBOARD FW24 WALL DEVELOPED ELEVATION

HORIZ SCALE: 1" = 20'
VERT SCALE: 1" = 5'

USERNAME: JCL Wed 23 Dec 2020 02:54pm
FILENAME: W:\2016\2016135\task_01-&-02-Lower_Calera_Crk\20161355S4

DOCUMENT NUMBER: CAE_CY-S-4018-66014

REV	DESCRIPTION	DATE	APPR.	REFERENCE INFORMATION AND NOTES

BIGGS CARDOSA ASSOCIATES INC
STRUCTURAL ENGINEERS
BCA
865 The Alameda
San Jose, California 95126
408-296-5515

DATE	ENGINEERING CERTIFICATION
10/13/20	REGISTERED PROFESSIONAL ENGINEER MAHESH M. PARMAR No. 2639 Exp. 12/31/22 CIVIL STATE OF CALIFORNIA
DESIGN G. TOLAN	
DRAWN D. MANCINI	
CHECKED D. DEVLIN	PROJECT ENGINEER — DATE 10/13/20

SANTA CLARA VALLEY WATER DISTRICT
Valley Water
PROJECT ENGINEER — DATE 12/30/20

PROJECT NAME AND SHEET DESCRIPTION:

LOWER CALERA CREEK FLOOD PROTECTION PROJECT

FLOODWALL ELEVATION NO 4

SCALE	PROJECT NUMBER
AS SHOWN	40174005
VERIFY SCALES 0 1" BAR IS ONE INCH ON ORIGINAL DRAWING IF NOT ONE INCH ON THIS SHEET, ADJUST SCALES ACCORDINGLY	SHEET CODE: S-54
	PAGE NUMBER: 109 OF 144

NOTES:

1. SEE NOTES ON S-51.
2. DIMENSION INDICATES MINIMUM DISTANCE BETWEEN TOP OF WALL AND FINISHED GRADE WHERE NO CHAIN LINK FENCE IS REQUIRED.

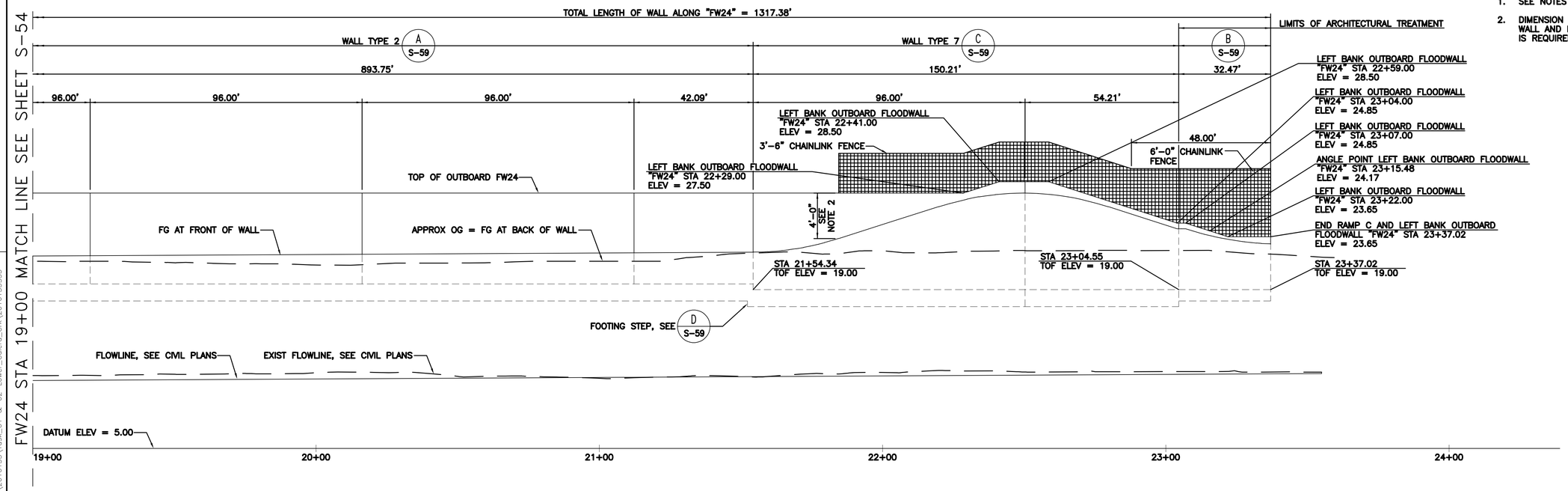

OUTBOARD FW24 WALL DEVELOPED ELEVATION

HORIZ SCALE: 1" = 20'
VERT SCALE: 1" = 5'

USERNAME: JCL Wed 23 Dec 2020 02:55pm
FILENAME: W:\2016\2016135\Task_01-&-02-Lower_Calera_Crk\2016135S55

DOCUMENT NUMBER: CAE_CY-S-4018-66015

REV	DESCRIPTION	DATE	APPR.	REFERENCE INFORMATION AND NOTES

BIGGS CARDOSA ASSOCIATES INC
STRUCTURAL ENGINEERS
865 The Alameda
San Jose, California 95126
408-296-5515

DATE 10/13/20
DESIGN G. TOLAN
DRAWN D. MANCINI
CHECKED D. DEVLIN

ENGINEERING CERTIFICATION
REGISTERED PROFESSIONAL ENGINEER MANVASH M HARMS No. 2639 Exp. 12/31/22 STRUCTURAL STATE OF CALIFORNIA
10/13/20
PROJECT ENGINEER DATE

SANTA CLARA VALLEY WATER DISTRICT
Valley Water
PROJECT ENGINEER DATE 12/30/20

PROJECT NAME AND SHEET DESCRIPTION:
LOWER CALERA CREEK
FLOOD PROTECTION PROJECT
FLOODWALL ELEVATION NO 5

SCALE AS SHOWN
VERIFY SCALES 0 1"
BAR IS ONE INCH ON ORIGINAL DRAWING IF NOT ONE INCH ON THIS SHEET, ADJUST SCALES ACCORDINGLY

PROJECT NUMBER 40174005
SHEET CODE: S-55
PAGE NUMBER: 110 OF 144

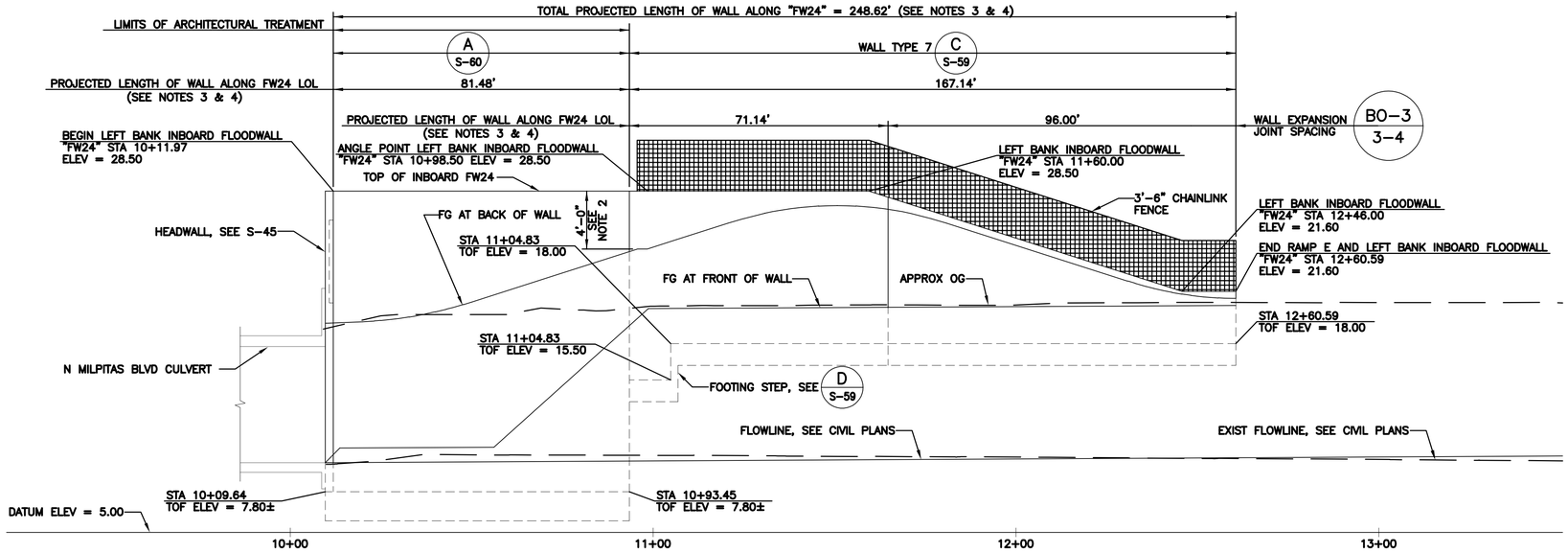

INBOARD FW24 WALL PROJECTED ELEVATION

HORIZ SCALE: 1" = 20'
VERT SCALE: 1" = 5'

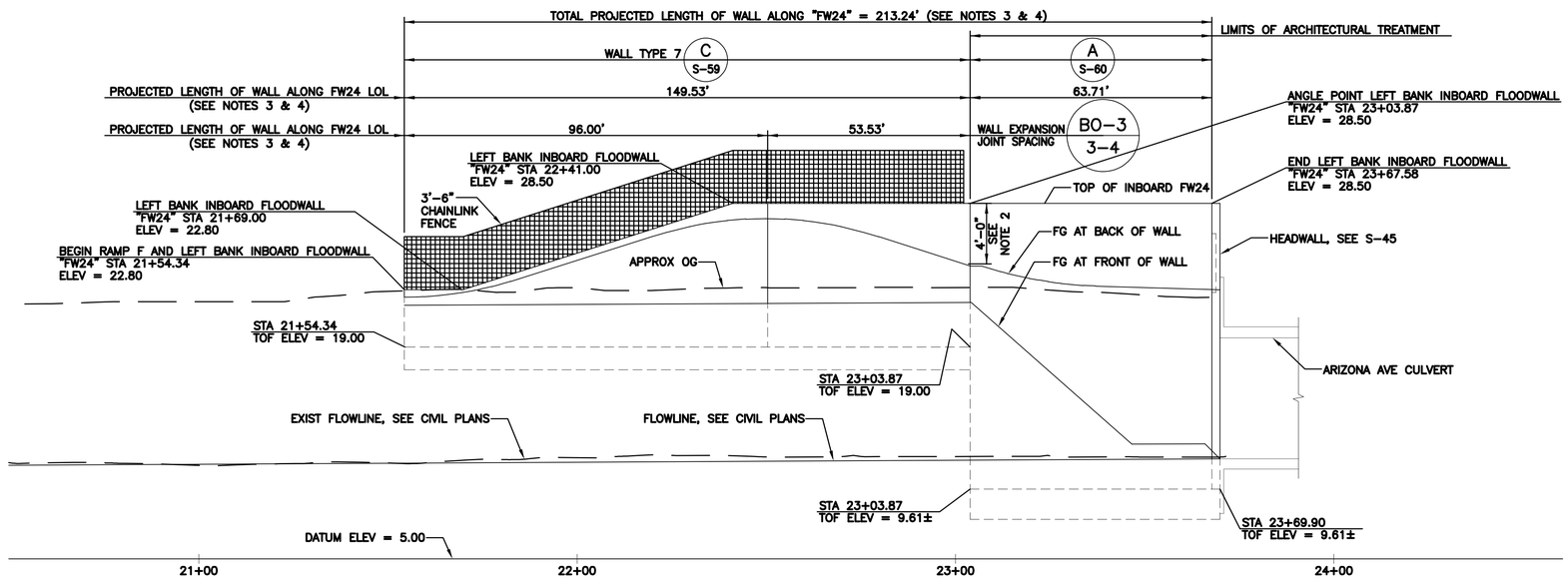

INBOARD FW24 WALL PROJECTED ELEVATION

HORIZ SCALE: 1" = 20'
VERT SCALE: 1" = 5'

NOTES:

1. SEE NOTES ON S-51.
2. DIMENSION INDICATES MINIMUM DISTANCE BETWEEN TOP OF WALL AND FINISHED GRADE WHERE NO CHAIN LINK FENCE IS REQUIRED.
3. FOR THE INBOARD FLOODWALLS, STATIONS SHOWN ARE BASED ON PERPENDICULAR PROJECTION FROM FW24 LOL.
4. ACTUAL LENGTH ALONG FACE OF WALL MAY NOT MATCH LENGTH ALONG LOL, SEE PLAN.

REV	DESCRIPTION	DATE	APPR.	REFERENCE INFORMATION AND NOTES

BIGGS CARDOSA ASSOCIATES INC
STRUCTURAL ENGINEERS
865 The Alameda
San Jose, California 95126
408-296-5515

DATE 10/13/20
DESIGN G. TOLAN
DRAWN D. MANCINI
CHECKED D. DEVLIN

ENGINEERING CERTIFICATION
REGISTERED PROFESSIONAL ENGINEER MAHESH M MARWAH No. 2639 Exp. 12/31/22 CIVIL STATE OF CALIFORNIA
PROJECT ENGINEER 10/13/20 DATE

SANTA CLARA VALLEY WATER DISTRICT
Valley Water
PROJECT ENGINEER DATE 12/30/20

PROJECT NAME AND SHEET DESCRIPTION:
LOWER CALERA CREEK FLOOD PROTECTION PROJECT
FLOODWALL ELEVATION NO 6

SCALE: AS SHOWN
VERIFY SCALES: 0 1" BAR IS ONE INCH ON ORIGINAL DRAWING IF NOT ONE INCH ON THIS SHEET, ADJUST SCALES ACCORDINGLY
PROJECT NUMBER: 40174005
SHEET CODE: S-56
PAGE NUMBER: 111 OF 144

DOCUMENT NUMBER: CAE_CY-S-4018-66016
USERNAME: JCL Wed 23 Dec 2020 02:55pm
FILENAME: W:\2016\2016135\task_01-&-02-Lower_Calera_Crk\20161355S6

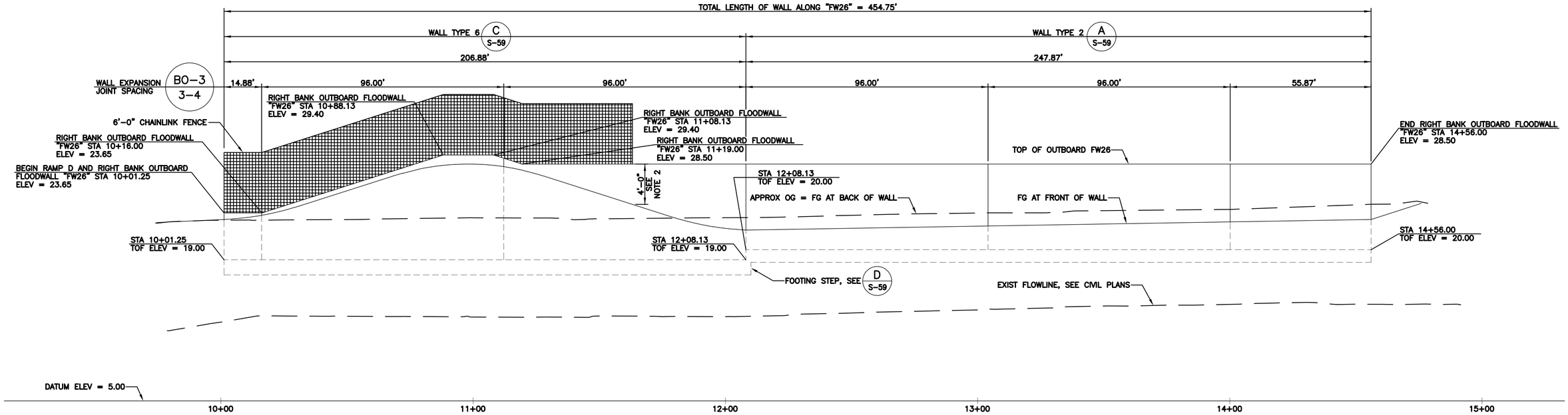

OUTBOARD FW26 WALL MIRRORED DEVELOPED ELEVATION

HORIZ SCALE: 1" = 20'
VERT SCALE: 1" = 5'

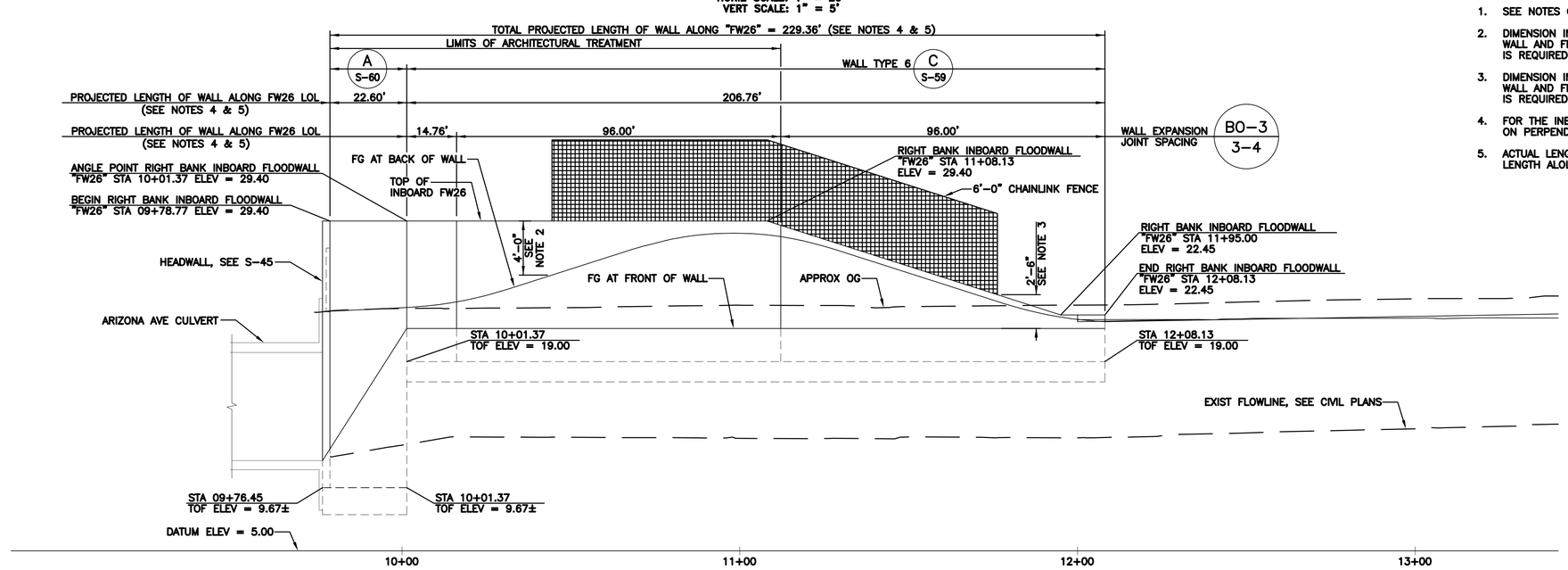

INBOARD FW26 WALL MIRRORED PROJECTED ELEVATION

HORIZ SCALE: 1" = 20'
VERT SCALE: 1" = 5'

NOTES:

1. SEE NOTES ON S-51.
2. DIMENSION INDICATES MINIMUM DISTANCE BETWEEN TOP OF WALL AND FINISHED GRADE WHERE NO CHAIN LINK FENCE IS REQUIRED.
3. DIMENSION INDICATES MAXIMUM DISTANCE BETWEEN TOP OF WALL AND FINISHED GRADE WHERE NO CHAIN LINK FENCE IS REQUIRED.
4. FOR THE INBOARD FLOODWALLS, STATIONS SHOWN ARE BASED ON PERPENDICULAR PROJECTION FROM FW26 LOL.
5. ACTUAL LENGTH ALONG FACE OF WAL MAY NOT MATCH LENGTH ALOLNG LOL, SEE PLAN.

REV	DESCRIPTION	DATE	APPR.	REFERENCE INFORMATION AND NOTES

BIGGS CARDOSA ASSOCIATES INC
STRUCTURAL ENGINEERS
BCA
865 The Alameda
San Jose, California 95126
408-296-5515

DATE 10/13/20
DESIGN G. TOLAN
DRAWN D. MANCINI
CHECKED D. DEVLIN

ENGINEERING CERTIFICATION
REGISTERED PROFESSIONAL ENGINEER MAHESH M. PARMAR No. 2639 Exp. 12/31/22 STRUCTURAL CALIFORNIA
PROJECT ENGINEER 10/13/20 DATE

SANTA CLARA VALLEY WATER DISTRICT
Valley Water
PROJECT ENGINEER DATE 12/30/20

PROJECT NAME AND SHEET DESCRIPTION:
LOWER CALERA CREEK FLOOD PROTECTION PROJECT
FLOODWALL ELEVATION NO 7

SCALE: AS SHOWN
VERIFY SCALES: 0 1" BAR IS ONE INCH ON ORIGINAL DRAWING IF NOT ONE INCH ON THIS SHEET, ADJUST SCALES ACCORDINGLY
PROJECT NUMBER: 40174005
SHEET CODE: S-57
PAGE NUMBER: 112 OF 144

DOCUMENT NUMBER: CAE_CY-S-4018-66017
USERNAME: JCL Wed 23 Dec 2020 02:55pm
FILENAME: W:\2016\2016135\task_01-&-02-Lower_Calera_Crk\20161355S7

Attachment 4
Page 112 of 144

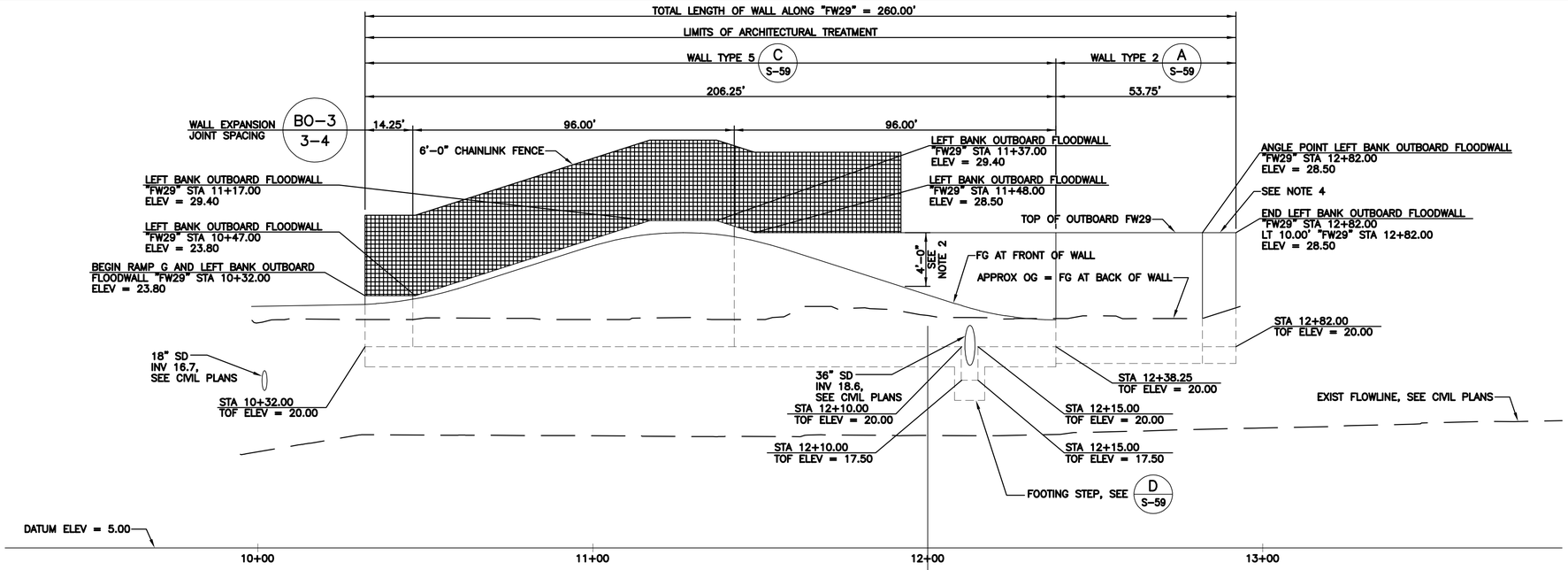

OUTBOARD FW29 WALL DEVELOPED ELEVATION

HORIZ SCALE: 1" = 20'
VERT SCALE: 1" = 5'

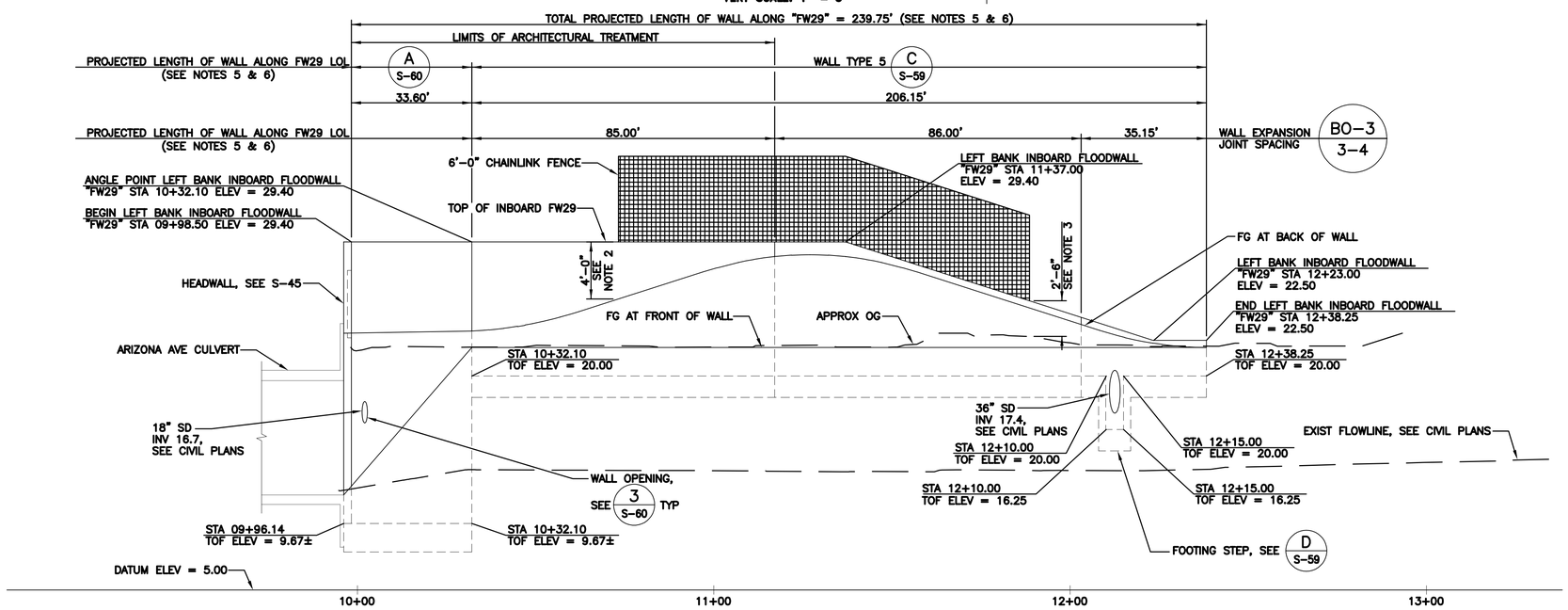

INBOARD FW29 WALL PROJECTED ELEVATION

HORIZ SCALE: 1" = 20'
VERT SCALE: 1" = 5'

NOTES:

1. SEE NOTES ON S-51.
2. DIMENSION INDICATES MINIMUM DISTANCE BETWEEN TOP OF WALL AND FINISHED GRADE WHERE NO CHAIN LINK FENCE IS REQUIRED.
3. DIMENSION INDICATES MAXIMUM DISTANCE BETWEEN TOP OF WALL AND FINISHED GRADE WHERE NO CHAIN LINK FENCE IS REQUIRED.
4. END OF OUTBOARD FW29 IS SHOWN DEVELOPED FOR CLARITY. THE END OF THE WALL IS OFFSET FROM THE WALL LOL. SEE PLAN ON S-50.
5. FOR THE INBOARD FLOODWALLS, STATIONS SHOWN ARE BASED ON PERPENDICULAR PROJECTION FROM FW29 LOL.
6. ACTUAL LENGTH ALONG FACE OF WALL MAY NOT MATCH LENGTH ALONG LOL, SEE PLAN.

REV	DESCRIPTION	DATE	APPR.	REFERENCE INFORMATION AND NOTES

BIGGS CARDOSA ASSOCIATES INC
STRUCTURAL ENGINEERS
BCA
865 The Alameda
San Jose, California 95126
408-296-5515

DATE	12/22/20
DESIGN	G. TOLAN
DRAWN	D. MANCINI
CHECKED	D. DEVLIN

ENGINEERING CERTIFICATION
REGISTERED PROFESSIONAL ENGINEER MAHESH M. MADHAV No. 2639 Exp. 12/31/22 CIVIL STATE OF CALIFORNIA
PROJECT ENGINEER — DATE 12/22/20

SANTA CLARA VALLEY WATER DISTRICT
Valley Water
PROJECT ENGINEER — DATE 12/30/20

PROJECT NAME AND SHEET DESCRIPTION:
LOWER CALERA CREEK
FLOOD PROTECTION PROJECT
FLOODWALL ELEVATION NO 8

SCALE: AS SHOWN
VERIFY SCALES: 0 — 1"
BAR IS ONE INCH ON ORIGINAL DRAWING IF NOT ONE INCH ON THIS SHEET, ADJUST SCALES ACCORDINGLY
PROJECT NUMBER: 40174005
SHEET CODE: S-58
PAGE NUMBER: 113 OF 144

USERNAME: JCL Wed 23 Dec 2020 02:55pm
FILENAME: W:\2016\201613513\task_01-&-02-Lower_Calera_Crk\201613558
DOCUMENT NUMBER: CAE_CY-S-4018-66018

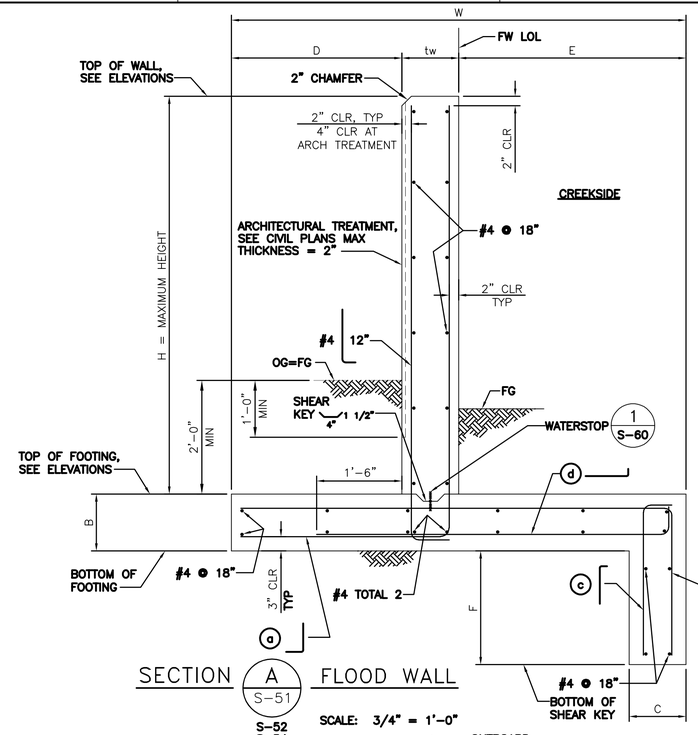

SECTION A S-51 FLOOD WALL

SCALE: 3/4" = 1'-0"

S-52
S-54
S-55
S-57
S-58

TABLE OF FLOODWALL DIMENSIONS A S-59

Wall Type	1	2	3	4
H	8'-0"	8'-6"	10'-0"	11'-3"
W	9'-1"	9'-1"	11'-10"	14'-1"
B	1'-3"	1'-6"	1'-9"	2'-0"
C	1'-3"	1'-6"	1'-9"	2'-0"
D	2'-7"	3'-9"	2'-10"	0'-0"
E	5'-6"	4'-4"	8'-0"	13'-1"
F	1'-6"	3'-0"	2'-6"	3'-0"
tw	1'-1"	1'-1"	1'-1"	1'-1"
a	#5 @ 12"	#5 @ 12"	#6 @ 12"	#6 @ 9"
b	#4 @ 12"	#4 @ 12"	#5 @ 12"	#6 @ 12"
c	#4 @ 12"	#4 @ 12"	#5 @ 12"	#5 @ 12"
d	#4 @ 12"	#4 @ 12"	#5 @ 12"	#5 @ 12"

NOTE: SEE ELEVATIONS FOR WALL TYPES.

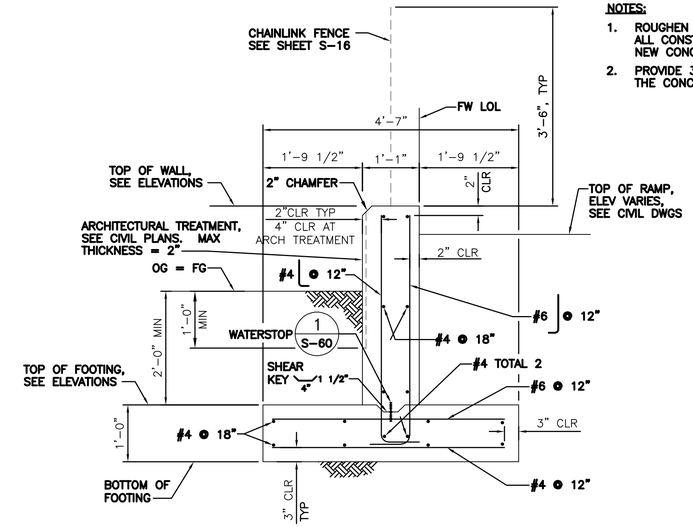

NOTES:

1. ROUGHEN ENTIRE CONCRETE SURFACE TO 1/4" AMPLITUDE AT ALL CONSTRUCTION JOINTS AND EXISTING CONCRETE PRIOR TO NEW CONCRETE POUR, UNLESS OTHERWISE NOTED.
2. PROVIDE 3/4"x3/4" CHAMFERS AT ALL SHARP EDGES OF THE CONCRETE.

SECTION B S-54 OUTBOARD RAMP WALL

S-55

SCALE: 3/4" = 1'-0"

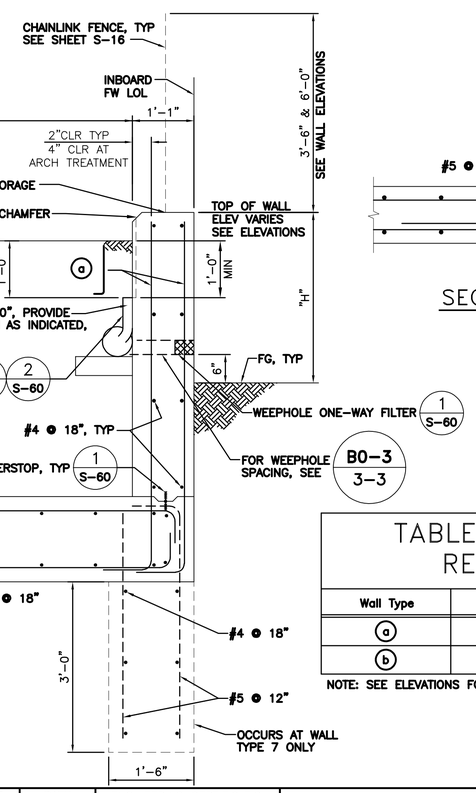

SECTION C S-51 RAMP WALL

SCALE: 3/4" = 1'-0"

S-52
S-53
S-54
S-55
S-56
S-57
S-58

TABLE OF RAMP WALL REINFORCEMENT C S-59

Wall Type	5	6	7
a	#6 @ 12"	#7 @ 6"	#7 @ 12"
b	#7 @ 6"	#8 @ 6"	#6 @ 12"

NOTE: SEE ELEVATIONS FOR WALL TYPES.

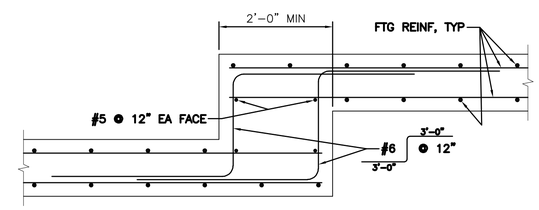

SECTION D S-51 TYPICAL FOOTING STEP

S-52
S-54
S-55
S-56
S-57
S-58

SCALE: 3/4" = 1'-0"

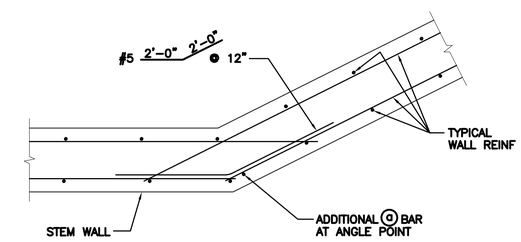

DETAIL 1 S-43 TYPICAL WALL INTERSECTION

S-47
S-49

SCALE: 3/4" = 1'-0"

REV	DESCRIPTION	DATE	APPR.	REFERENCE INFORMATION AND NOTES

BIGGS CARDOSA ASSOCIATES INC
STRUCTURAL ENGINEERS
865 The Alameda
San Jose, California 95126
408-296-5515

DATE 12/22/20
DESIGN G. TOLAN
DRAWN D. MANCINI
CHECKED D. DEVLIN

ENGINEERING CERTIFICATION
REGISTERED PROFESSIONAL ENGINEER MANISH M MADRAS No. 2639 Exp. 12/31/22 CIVIL STATE OF CALIFORNIA
PROJECT ENGINEER 12/22/20 DATE

SANTA CLARA VALLEY WATER DISTRICT
Valley Water
PROJECT ENGINEER
DATE 12/30/20

PROJECT NAME AND SHEET DESCRIPTION:
LOWER CALERA CREEK FLOOD PROTECTION PROJECT
FLOODWALL DETAILS NO 1

SCALE: AS SHOWN
PROJECT NUMBER: 40174005
VERIFY SCALES: 0 1"
BAR IS ONE INCH ON ORIGINAL DRAWING IF NOT ONE INCH ON THIS SHEET, ADJUST SCALES ACCORDINGLY
SHEET CODE: S-59
PAGE NUMBER: 114 OF 144

USERNAME: JCL Wed 23 Dec 2020 02:55pm
FILENAME: W:\2016\2016135\task_01-&-02-Lower_Calera_Crk\2016135S59
DOCUMENT NUMBER: CAE_CY-S-4018-66019

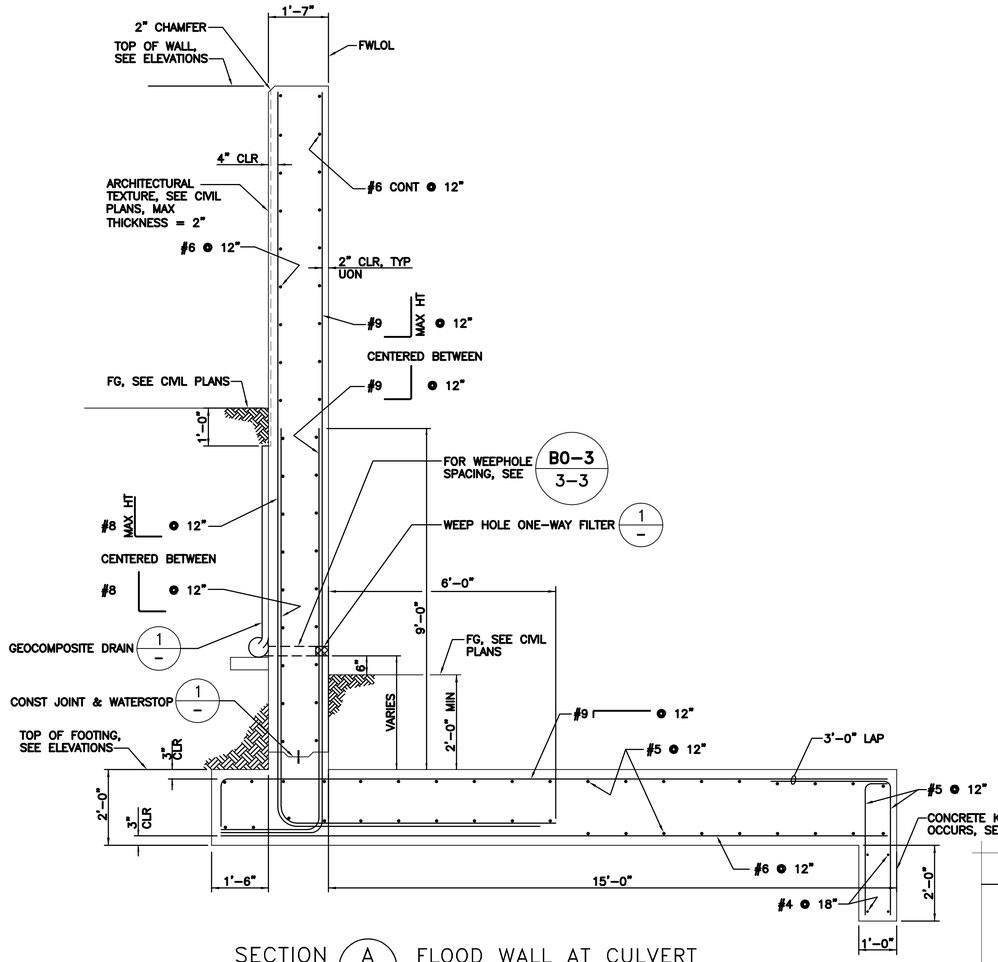

SECTION A / S-46 FLOOD WALL AT CULVERT

S-47
S-50
S-53
S-56
S-57
S-58

SCALE: 1/2" = 1'-0"

NOTE:
ADJACENT TO EXIST CULVERTS, WALL FOOTING CONNECTS TO OPPOSITE WALL FOOTING, SEE 4 / -.

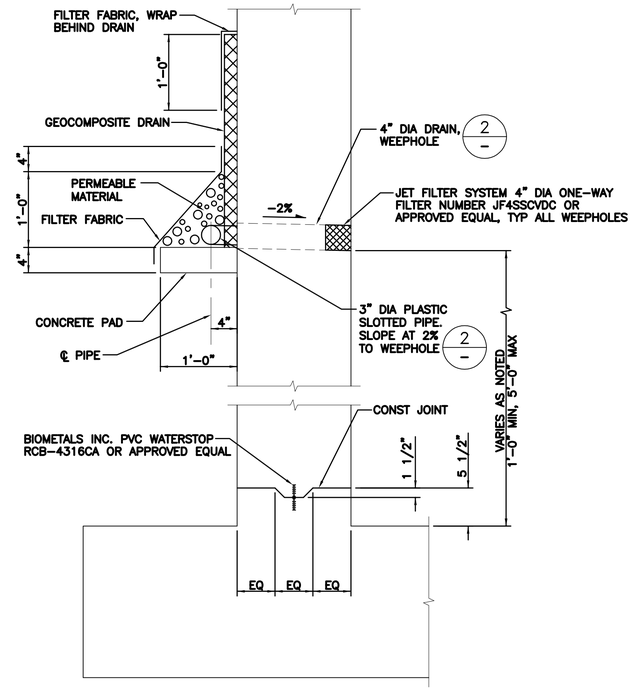

DETAIL 1 / S-59 DRAINAGE

S-60

SCALE: 1" = 1'-0"

NOTE:
1. SEE NOTES ON S-59.

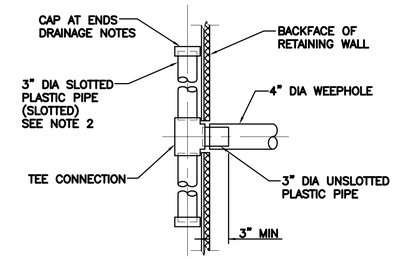

DETAIL 2 / S-59 SLOTTED PIPE DETAILS

S-60

SCALE: NO SCALE

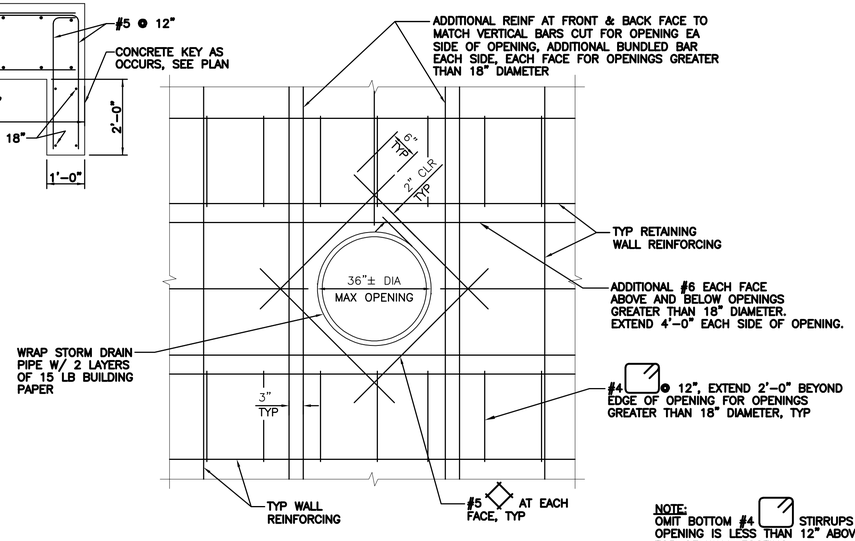

DETAIL 3 / S-58 OPENING AT WALL ELEVATION

SCALE: NO SCALE

NOTE:
OMIT BOTTOM #4 STIRRUPS WHERE OPENING IS LESS THAN 12" ABOVE TOP OF WALL FOOTING.

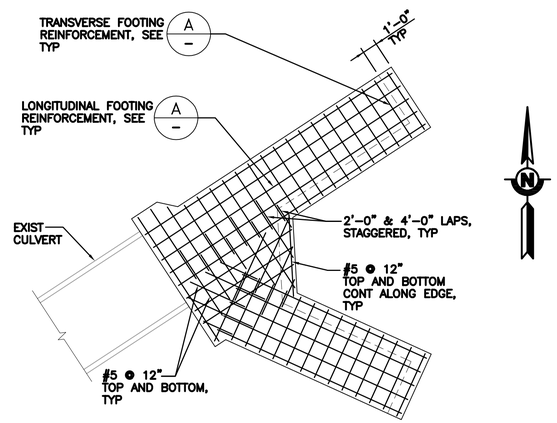

NOTES:
1. BEGIN FLOODWALL 22 AND FLOODWALL 24 AS SHOWN. ALL OTHER FOOTING INTERSECTIONS AT CULVERT INLETS AND OUTLETS SIMILAR.
2. NOT ALL REINFORCEMENT SHOWN FOR CLARITY.

DETAIL 4 / - FOOTING REINFORCEMENT PLAN

SCALE: NO SCALE

REV	DESCRIPTION	DATE	APPR.	REFERENCE INFORMATION AND NOTES

BIGGS CARDOSA ASSOCIATES INC
STRUCTURAL ENGINEERS
BCA
865 The Alameda
San Jose, California 95126
408-296-5515

DATE	ENGINEERING CERTIFICATION
12/18/20	REGISTERED PROFESSIONAL ENGINEER MARWAN M. HARMOUCH No. 2639 Exp. 12/31/22 CIVIL STATE OF CALIFORNIA
DESIGN G. TOLAN	
DRAWN D. MANCINI	
CHECKED D. DEVLIN	PROJECT ENGINEER 12/18/20 DATE

SANTA CLARA VALLEY WATER DISTRICT
Valley Water
PROJECT ENGINEER
DATE 12/30/20

PROJECT NAME AND SHEET DESCRIPTION:
LOWER CALERA CREEK
FLOOD PROTECTION PROJECT
FLOODWALL DETAILS NO 2

SCALE	PROJECT NUMBER
AS SHOWN	40174005
VERIFY SCALES 0 1" BAR IS ONE INCH ON ORIGINAL DRAWING IF NOT ONE INCH ON THIS SHEET, ADJUST SCALES ACCORDINGLY	SHEET CODE: S-60
	PAGE NUMBER: 115 OF 144

USERNAME: JCL Wed 23 Dec 2020 02:55pm
FILENAME: W:\2016\2016135\task_01-&-02-Lower_Calera_Crk\20161355S0

DOCUMENT NUMBER: CAE_CY-S-4018-66020

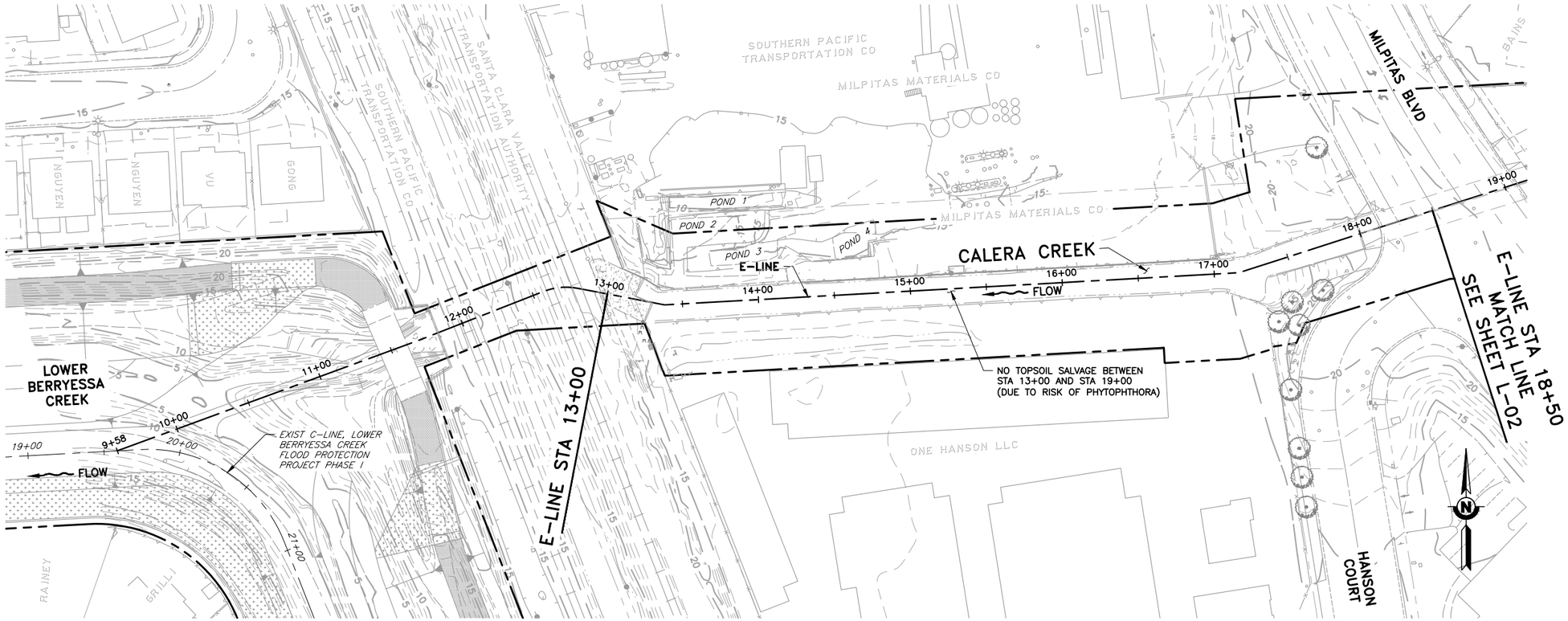

PLAN

SCALE: 1" = 40'

NOTE:

1. TOPSOIL SALVAGE POLYGONS AND SALVAGE DEPTHS SHOWN ARE APPROXIMATE AND ARE PROVIDED FOR THE CONTRACTOR'S CONVENIENCE. CONTRACTOR'S SOIL SCIENTIST SHALL MONITOR TOPSOIL SALVAGE WORK PER THE SPECIFICATIONS TO DETERMINE EXACT TOPSOIL SALVAGE LOCATIONS AND TOPSOIL SALVAGE DEPTHS BASED UPON SOIL TEXTURES ENCOUNTERED.

REV	DESCRIPTION	DATE	APPR.	REFERENCE INFORMATION AND NOTES
	Attachment 4 Page 116 of 144			

H. T. HARVEY & ASSOCIATES
Ecological Consultants

DATE 12/30/2020
DESIGN M. QUINN K. VERPEET
DRAWN A. WATSON R. VISSCHER
CHECKED J. HOWARD

ENGINEERING CERTIFICATION
REGISTERED LANDSCAPE ARCHITECT JOSEPH M. HOWARD 4598 Exp. 12/31/22 STATE OF CALIFORNIA
PROJECT ENGINEER DATE

SANTA CLARA VALLEY WATER DISTRICT
Valley Water
Karl Nem 12.30.2020
PROJECT ENGINEER ACCEPTED BY DISTRICT DATE

PROJECT NAME AND SHEET DESCRIPTION:

LOWER CALERA CREEK FLOOD PROTECTION PROJECT

TOPSOIL SALVAGE PLAN E-LINE STA 13+00 TO 18+50

Attachment 4
Page 116 of 144

SCALE
VERIFY SCALES 0 1"
BAR SCALE 1INCH ON ORIGINAL DRAWING IF NOT 1INCH ON THIS SHEET, ADJUST SCALES ACCORDINGLY

PROJECT NUMBER 40174005
SHEET CODE: L-01
SHEET NUMBER: 116 OF 144

DOCUMENT NUMBER: CAE_CY-L-4018-66021

USERNAME: Jennford 12/23/2020 4:12 PM
FILENAME: K:\Active Projects\MP-40174005\Lower Calera Creek Project\SHEETS\L-01.dwg

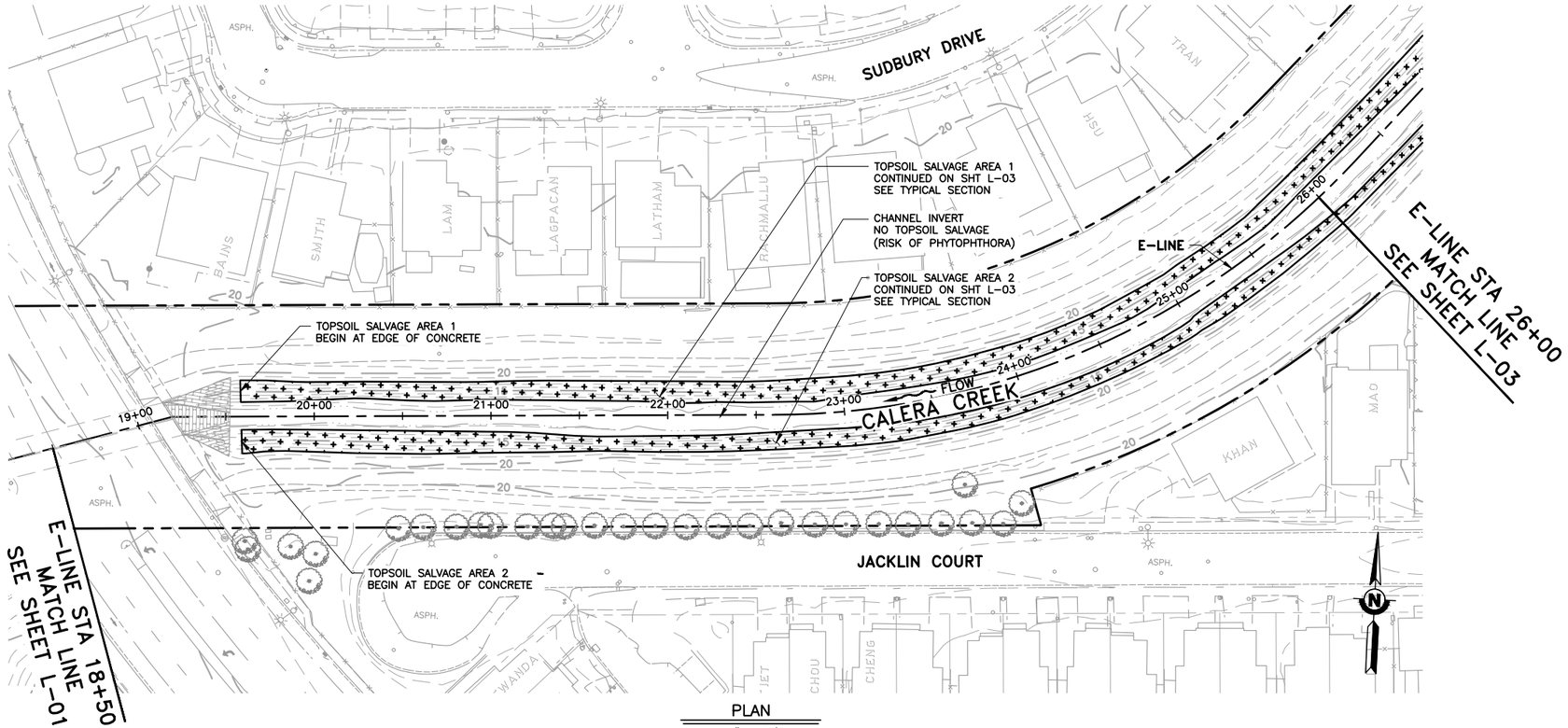

PLAN
SCALE: 1" = 40'

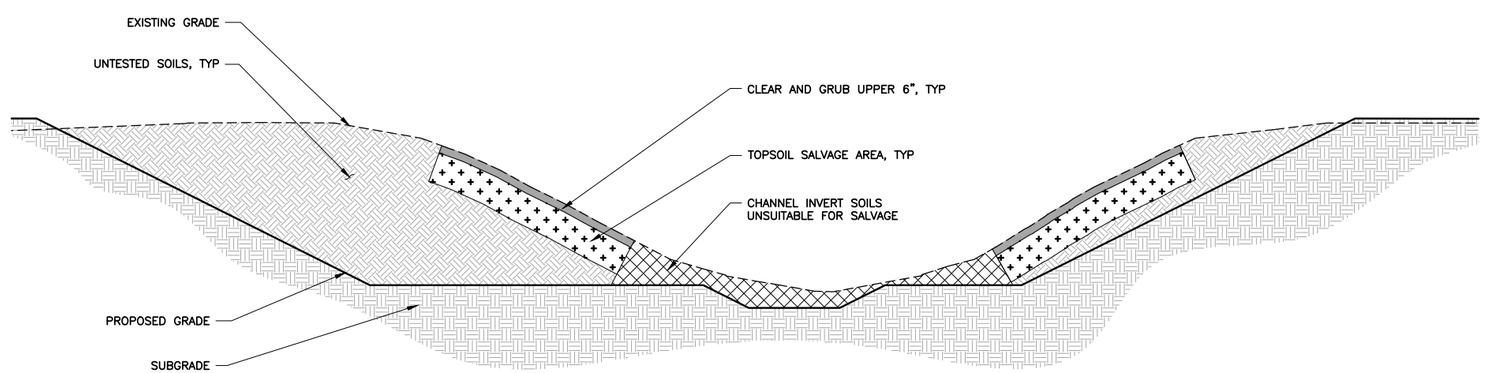

TYPICAL SECTION 1 – CHANNEL SECTION
SCALE: NTS

NOTE:

1. TOPSOIL SALVAGE POLYGONS AND SALVAGE DEPTHS SHOWN ARE APPROXIMATE AND ARE PROVIDED FOR THE CONTRACTOR'S CONVENIENCE. CONTRACTOR'S SOIL SCIENTIST SHALL MONITOR TOPSOIL SALVAGE WORK PER THE SPECIFICATIONS TO DETERMINE EXACT TOPSOIL SALVAGE LOCATIONS AND TOPSOIL SALVAGE DEPTHS BASED UPON SOIL TEXTURES ENCOUNTERED.

REV	DESCRIPTION	DATE	APPR.	REFERENCE INFORMATION AND NOTES
	Attachment 4 Page 117 of 144			

H. T. HARVEY & ASSOCIATES
Ecological Consultants

DATE 12/30/2020
DESIGN M. QUINN K. VERPEET
DRAWN A. WATSON R. VISSCHER
CHECKED J. HOWARD

ENGINEERING CERTIFICATION
REGISTERED LANDSCAPE ARCHITECT JOSEPH M. HOWARD 4598 Exp. 12/31/22 STATE OF CALIFORNIA
PROJECT ENGINEER DATE

SANTA CLARA VALLEY WATER DISTRICT
Valley Water
12.30.2020
PROJECT ENGINEER ACCEPTED BY DISTRICT DATE

PROJECT NAME AND SHEET DESCRIPTION:
LOWER CALERA CREEK FLOOD PROTECTION PROJECT
TOPSOIL SALVAGE PLAN E-LINE STA 18+50 TO 26+00

SCALE
VERIFY SCALES 0 1"
IF NOT ONE INCH ON ORIGINAL DRAWING IF NOT ONE INCH ON THIS SHEET, ADJUST SCALES ACCORDINGLY

PROJECT NUMBER 40174005
SHEET CODE: L-02
SHEET NUMBER: 117 OF 144

USERNAME: Jennford 12/23/2020 4:13 PM
FILENAME: K:\Active Projects\MP-40174005\Lower Calera Creek Project\SHEETS\L-02.dwg
DOCUMENT NUMBER: CAE_CY-L-4018-66022

USERNAME: Jennford 12/23/2020 4:13 PM
FILENAME: K:\Active Projects\MP-40174005\Lower Calera Creek Project\SHEETS\L-03.dwg

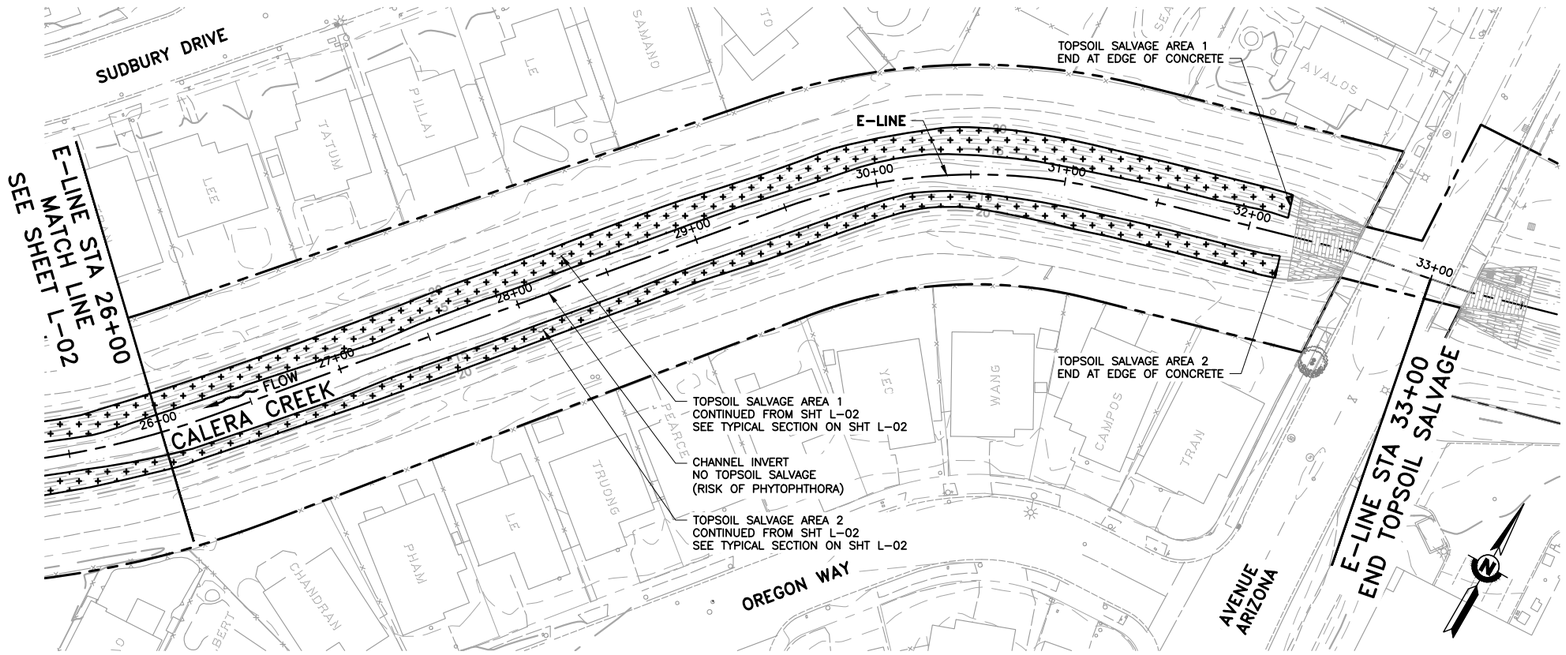

PLAN

SCALE: 1" = 40'

NOTE:

1. TOPSOIL SALVAGE POLYGONS AND SALVAGE DEPTHS SHOWN ARE APPROXIMATE AND ARE PROVIDED FOR THE CONTRACTOR'S CONVENIENCE. CONTRACTOR'S SOIL SCIENTIST SHALL MONITOR TOPSOIL SALVAGE WORK PER THE SPECIFICATIONS TO DETERMINE EXACT TOPSOIL SALVAGE LOCATIONS AND TOPSOIL SALVAGE DEPTHS BASED UPON SOIL TEXTURES ENCOUNTERED.

REV	DESCRIPTION	DATE	APPR.	REFERENCE INFORMATION AND NOTES
	Attachment 4 Page 118 of 144			

H. T. HARVEY & ASSOCIATES
Ecological Consultants

DATE 12/30/2020
DESIGN M. QUINN K. VERPEET
DRAWN A. WATSON R. VISSCHER
CHECKED J. HOWARD

ENGINEERING CERTIFICATION
REGISTERED LANDSCAPE ARCHITECT JOSEPH M. HOWARD 4598 Exp. 12/31/22 STATE OF CALIFORNIA
PROJECT ENGINEER DATE

SANTA CLARA VALLEY WATER DISTRICT
Valley Water
PROJECT ENGINEER ACCEPTED BY DISTRICT 12.30.2020 DATE

PROJECT NAME AND SHEET DESCRIPTION:
LOWER CALERA CREEK
FLOOD PROTECTION PROJECT
TOPSOIL SALVAGE PLAN
E-LINE STA 26+00 TO 33+00

Attachment 4
Page 118 of 144

SCALE
VERIFY SCALES
0 1"
IF NOT ONE INCH ON ORIGINAL DRAWING IF NOT ONE INCH ON THIS SHEET, ADJUST SCALES ACCORDINGLY

PROJECT NUMBER 40174005
SHEET CODE: L-03
SHEET NUMBER: 118 OF 144

DOCUMENT NUMBER: CAE_CY-L-4018-66023

NOTES:
1. PROTECT PLANTS WHEN MOVING HOSE AND TRIPOD.

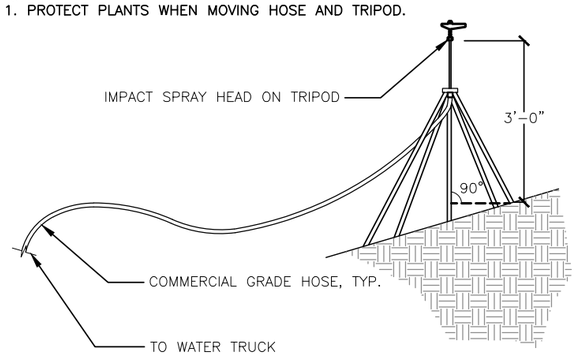

DETAIL 1 – MOVEABLE SPRAY ASSEMBLY
SCALE: NTS

PLANTING SCHEDULE:

LOWER FLOODPLAIN ZONE

SYMBOL	SCIENTIFIC NAME	COMMON NAME	CONTAINER SIZE	PLANT QUANTITIES
	ELEOCHARIS MACROSTACHYA	SPIKERUSH	DEEPOT 40	250
	EUTHAMIA OCCIDENTALIS	WESTERN GOLDENROD	DEEPOT 40	250
	JUNCUS MEXICANUS	MEXICAN RUSH	DEEPOT 40	250
	JUNCUS XIPHIOIDES	IRISH-LEAVED RUSH	DEEPOT 40	250
			TOTAL	1000

UPPER FLOODPLAIN ZONE

SYMBOL	SCIENTIFIC NAME	COMMON NAME	CONTAINER SIZE	PLANT QUANTITIES
	BACCHARIS GLUTINOSA	MARSH BACCHARIS	DEEPOT 40	85
	ELYMUS TRITICOIDES	BEARDLESS WILDRYE	DEEPOT 40	85
	EUTHAMIA OCCIDENTALIS	WESTERN GOLDENROD	DEEPOT 40	85
	JUNCUS BALTICUS	BALTIC RUSH	DEEPOT 40	85
	JUNCUS MEXICANUS	MEXICAN RUSH	DEEPOT 40	85
	JUNCUS PATENS	COMMON RUSH	DEEPOT 40	85
	SYMPHYOTRICHUM CHILENSE	PACIFIC ASTER	DEEPOT 40	85
			TOTAL	595

NOTES:

1. PLANTING ZONE LAYOUT SHALL BE SET PER DETAIL 1, SHEET L-08.
2. PLUG CONTAINER PLANTS SHALL BE INSTALLED IN CLUSTERS OF 5 PLANTS PER DETAIL 2, SHEET L-08. EXTRA PLANTS SHALL BE ADDED TO GROUP(S) OF THE SAME SPECIES.
3. INDIVIDUAL PLUG CONTAINER PLANTS SHALL BE INSTALLED PER DETAIL 3, SHEET L-08.
4. APPLY WETLAND BROADCAST SEED MIX PER SPECIFICATIONS.

ABBREVIATIONS:

APPROX	APPROXIMATE
FT	FEET
LBS	POUNDS
PLS	PURE LIVE SEED
AC	ACRE

LEGEND:

- PROPERTY BOUNDARY
- LOWER FLOODPLAIN ZONE AND WETLAND BROADCAST SEEDING AREA
- UPPER FLOODPLAIN ZONE AND WETLAND BROADCAST SEEDING AREA
- WETLAND BROADCAST SEEDING AREA
- FLOODPLAIN DEPRESSION

USERNAME: Jennford 12/23/2020 4:13 PM
FILENAME: K:\Active Projects\MP-40174005\Lower Calera Creek Project\SHEETS\L-04.dwg

DOCUMENT NUMBER: CAE_CY-L-4018-66024

REV	DESCRIPTION	DATE	APPR.	REFERENCE INFORMATION AND NOTES

Attachment 4
Page 119 of 144

H. T. HARVEY & ASSOCIATES
Ecological Consultants

DATE 12/30/2020
DESIGN M. QUINN K. VERPEET
DRAWN A. WATSON R. VISSCHER
CHECKED J. HOWARD

ENGINEERING CERTIFICATION
REGISTERED LANDSCAPE ARCHITECT JOSEPH M. HOWARD 4598 Exp. 12/31/22 STATE OF CALIFORNIA
PROJECT ENGINEER DATE

SANTA CLARA VALLEY WATER DISTRICT
Valley Water
PROJECT ENGINEER ACCEPTED BY DISTRICT 12.30.2020 DATE

PROJECT NAME AND SHEET DESCRIPTION:
LOWER CALERA CREEK
FLOOD PROTECTION PROJECT
PLANTING SCHEDULE
NOTES AND LEGEND

SCALE
VERIFY SCALES 0 1"
IF NOT 1" ON ORIGINAL DRAWING IF NOT 1" ON THIS SHEET, ADJUST SCALES ACCORDINGLY

PROJECT NUMBER 40174005
SHEET CODE: L-04
SHEET NUMBER: 119 OF 144

Attachment 4
Page 119 of 144

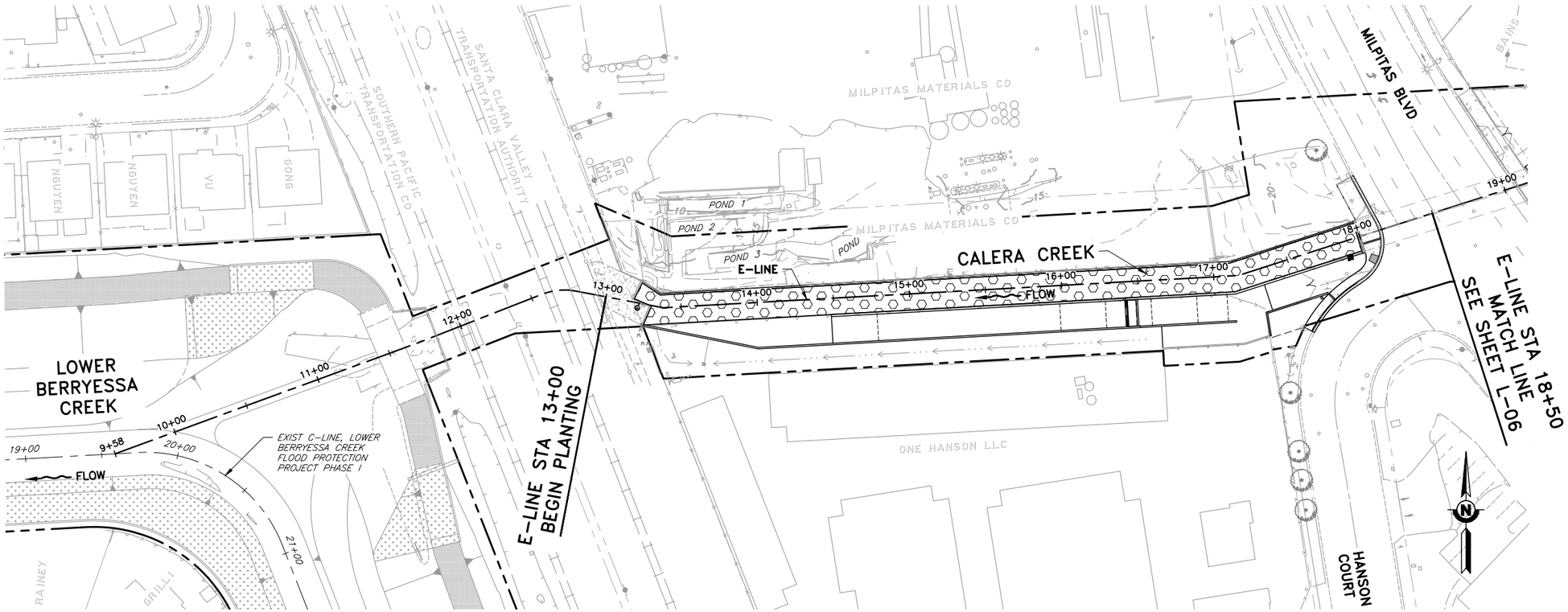

PLAN

SCALE: 1" = 40'

USERNAME: Jennford 12/23/2020 4:13 PM
FILENAME: K:\Active Projects\MP-40174005\Lower Calera Creek Project\SHEETS\L-05.dwg

DOCUMENT NUMBER: CAE_CY-L-4018-66025

REV	DESCRIPTION	DATE	APPR.
	Attachment 4 Page 120 of 144		

REFERENCE INFORMATION AND NOTES

1. AERIAL PHOTOGRAMMETRIC IMAGERY WAS TAKEN JULY, 2008.
2. LEFT AND RIGHT BANKS ARE VIEWED LOOKING UPSTREAM.
3. SEE SHEET L-04 FOR PLANTING SCHEDULE.
4. SEE SHEET L-08 FOR PLANTING DETAILS.

H. T. HARVEY & ASSOCIATES
Ecological Consultants

DATE 12/30/2020
DESIGN M. QUINN K. VERPEET
DRAWN A. WATSON R. VISSCHER
CHECKED J. HOWARD

ENGINEERING CERTIFICATION
REGISTERED LANDSCAPE ARCHITECT JOSEPH M. HOWARD 4598 Exp. 12/31/22 STATE OF CALIFORNIA
PROJECT ENGINEER DATE

SANTA CLARA VALLEY WATER DISTRICT
Valley Water
12.30.2020
PROJECT ENGINEER ACCEPTED BY DISTRICT DATE

PROJECT NAME AND SHEET DESCRIPTION:

LOWER CALERA CREEK FLOOD PROTECTION PROJECT

PLANTING PLAN
E-LINE STA 13+00 TO 18+50

SCALE

VERIFY SCALES
0 1"
BAR IS ONE INCH ON ORIGINAL DRAWING IF NOT ONE INCH ON THIS SHEET, ADJUST SCALES ACCORDINGLY

PROJECT NUMBER 40174005

SHEET CODE: L-05

SHEET NUMBER: 120 OF 144

Attachment 4
Page 120 of 144

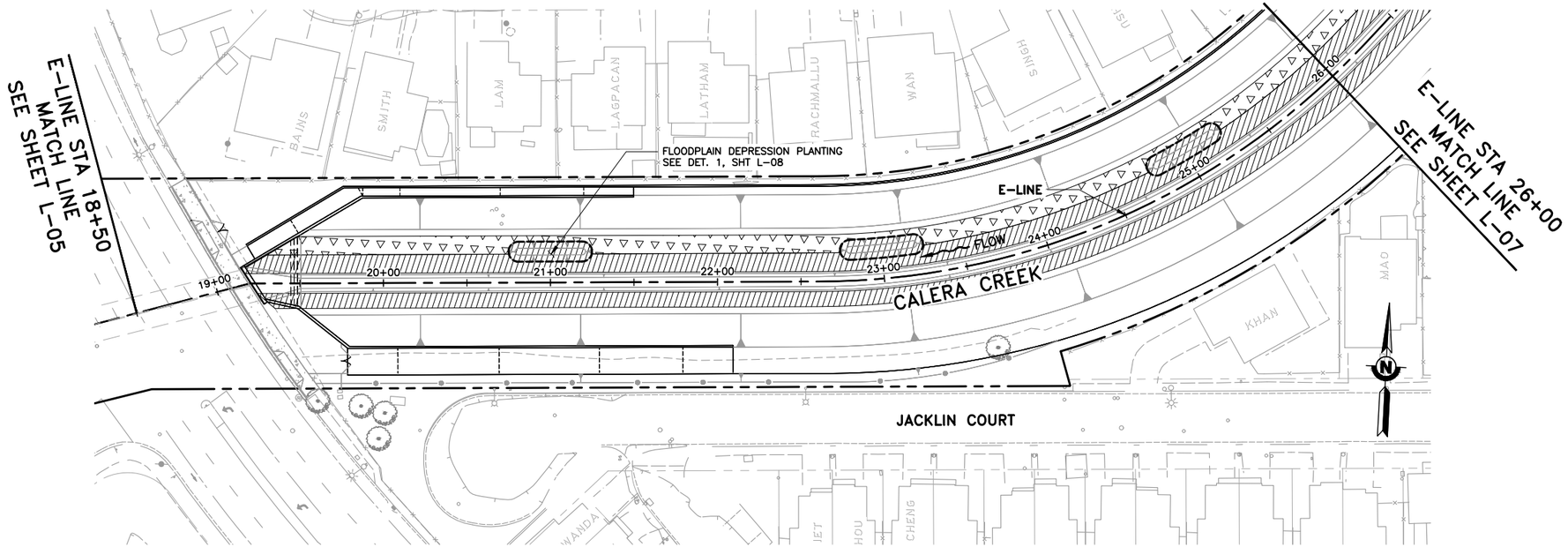

PLAN

SCALE: 1" = 40'

USERNAME: Jennford 12/23/2020 4:14 PM
FILENAME: K:\Active Projects\MP-40174005\Lower Calera Creek Project\SHEETS\L-06.dwg

DOCUMENT NUMBER: CAE_CY-L-4018-66026

REV	DESCRIPTION	DATE	APPR.
	Attachment 4 Page 121 of 144		

REFERENCE INFORMATION AND NOTES
1. AERIAL PHOTOGRAMMETRIC IMAGERY WAS TAKEN JULY, 2008.
2. SEE SHEET L-03 FOR PLANTING SCHEDULE.
3. SEE SHEET L-06 FOR PLANTING DETAILS.

H. T. HARVEY & ASSOCIATES
Ecological Consultants

DATE 12/30/2020
DESIGN M. QUINN K. VERPEET
DRAWN A. WATSON R. VISSCHER
CHECKED J. HOWARD

ENGINEERING CERTIFICATION
REGISTERED LANDSCAPE ARCHITECT
JOSEPH M. HOWARD
4598
Exp. 12/31/22
STATE OF CALIFORNIA
PROJECT ENGINEER DATE

SANTA CLARA VALLEY WATER DISTRICT
Valley Water
12.30.2020
PROJECT ENGINEER ACCEPTED BY DISTRICT DATE

PROJECT NAME AND SHEET DESCRIPTION:
LOWER CALERA CREEK
FLOOD PROTECTION PROJECT
PLANTING PLAN
E-LINE STA 18+50 TO 26+00

SCALE
VERIFY SCALES
0 1"
BAR IS ONE INCH ON ORIGINAL DRAWING IF NOT ONE INCH ON THIS SHEET, ADJUST SCALES ACCORDINGLY

PROJECT NUMBER 40174005
SHEET CODE: L-06
SHEET NUMBER: 121 OF 144

Attachment 4
Page 121 of 144

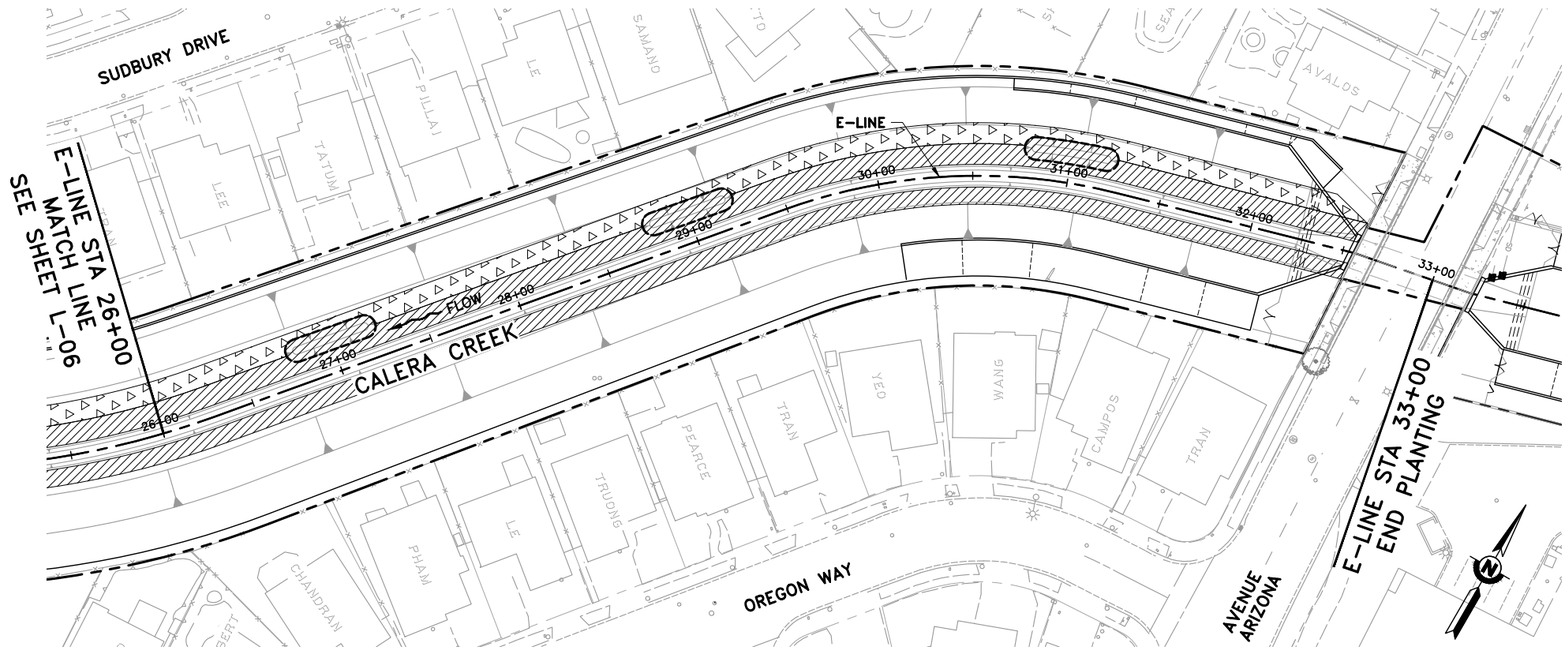

PLAN

SCALE: 1" = 40'

REV	DESCRIPTION	DATE	APPR.
	Attachment 4 Page 122 of 144		

REFERENCE INFORMATION AND NOTES

1. AERIAL PHOTOGRAMMETRIC IMAGERY WAS TAKEN JULY, 2008.
2. SEE SHEET L-03 FOR PLANTING SCHEDULE.
3. SEE SHEET L-06 FOR PLANTING DETAILS.

H. T. HARVEY & ASSOCIATES
Ecological Consultants

DATE 12/30/2020
DESIGN M. QUINN K. VERPEET
DRAWN A. WATSON R. VISSCHER
CHECKED J. HOWARD

ENGINEERING CERTIFICATION
REGISTERED LANDSCAPE ARCHITECT JOSEPH M. HOWARD 4598 Exp. 12/31/22 STATE OF CALIFORNIA
PROJECT ENGINEER DATE

SANTA CLARA VALLEY WATER DISTRICT
Valley Water
PROJECT ENGINEER ACCEPTED BY DISTRICT 12.30.2020 DATE

PROJECT NAME AND SHEET DESCRIPTION:

LOWER CALERA CREEK
FLOOD PROTECTION PROJECT

PLANTING PLAN
E-LINE STA 26+00 TO 33+00

SCALE
VERIFY SCALES
0 1"
IF NOT 1" INCH ON ORIGINAL DRAWING IF NOT 1" INCH ON THIS SHEET, ADJUST SCALES ACCORDINGLY

PROJECT NUMBER 40174005
SHEET CODE: L-07
SHEET NUMBER: 122 OF 144

Attachment 4
Page 122 of 144

DOCUMENT NUMBER: CAE_CY-L-4018-66027

USERNAME: Jennford 12/23/2020 4:14 PM
FILENAME: K:\Active Projects\MP-40174005\Lower Calera Creek Project\SHEETS\L-07.dwg

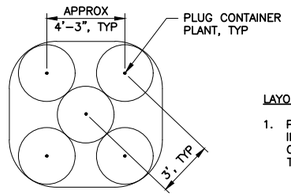

LAYOUT NOTES:

1. PLUG CONTAINER PLANTS ARE TO BE INSTALLED IN CLUSTERS BY SPECIES. EACH CLUSTER SHALL CONSIST OF 5 PLANTS OF THE SAME SPECIES.

DETAIL 2 / L-06 PLANT CLUSTER LAYOUT
SCALE: NTS
L-07

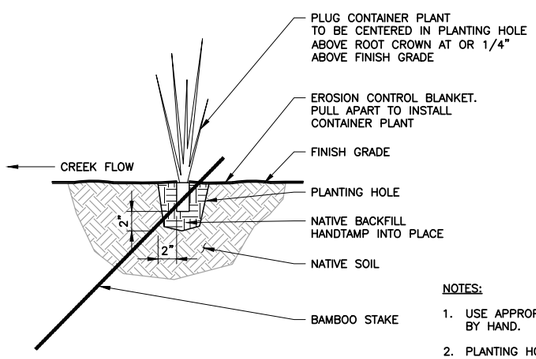

NOTES:

1. USE APPROPRIATE TOOL TO DIG PLANTING HOLE BY HAND.
2. PLANTING HOLE SHALL BE LARGE ENOUGH TO PREVENT "J" ROOTING, WITH 2 INCHES MINIMUM CLEARANCE AT BOTTOM AND SIDES OF ROOT BALL.

DETAIL 3 / L-06 PLUG CONTAINER PLANT INSTALLATION
SCALE: NTS
L-07

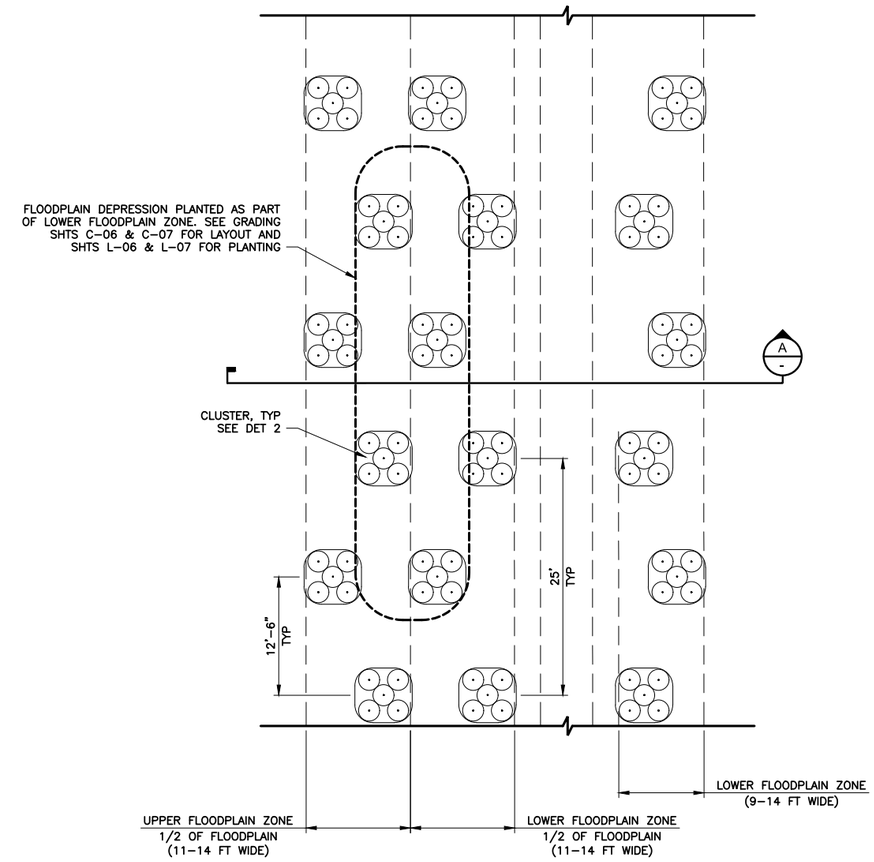

PLAN

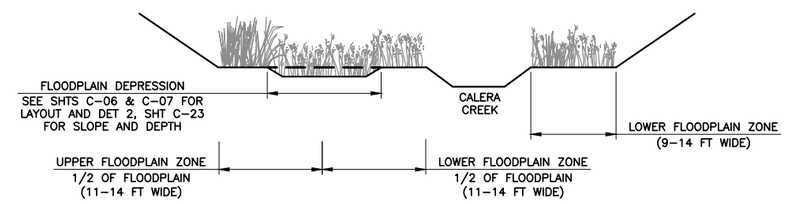

ELEVATION A

DETAIL 1 / L-06 PLANTING ZONE LAYOUT
SCALE: NTS
L-07

REV	DESCRIPTION	DATE	APPR.	REFERENCE INFORMATION AND NOTES
	Attachment 4 Page 123 of 144			

H. T. HARVEY & ASSOCIATES
Ecological Consultants

DATE 12/30/2020
DESIGN M. QUINN K. VERPEET
DRAWN A. WATSON R. VISSCHER
CHECKED J. HOWARD

ENGINEERING CERTIFICATION
REGISTERED LANDSCAPE ARCHITECT JOSEPH M. HOWARD 4598 Exp. 12/31/22 STATE OF CALIFORNIA
PROJECT ENGINEER DATE

SANTA CLARA VALLEY WATER DISTRICT
Valley Water
PROJECT ENGINEER ACCEPTED BY DISTRICT 12.30.2020 DATE

PROJECT NAME AND SHEET DESCRIPTION:
LOWER CALERA CREEK
FLOOD PROTECTION PROJECT
PLANTING DETAILS

SCALE
VERIFY SCALES
0 1"
IF NOT ONE INCH ON ORIGINAL DRAWING IF NOT ONE INCH ON THIS SHEET, ADJUST SCALES ACCORDINGLY

PROJECT NUMBER 40174005
SHEET CODE: L-08
SHEET NUMBER: 123 OF 144

Attachment 4
Page 123 of 144

USERNAME: Jennford 12/23/2020 4:14 PM
FILENAME: K:\Active Projects\MP-40174005\Lower Calera Creek Project\SHEETS\L-08.dwg
DOCUMENT NUMBER: CAE_CY-L-4018-66028

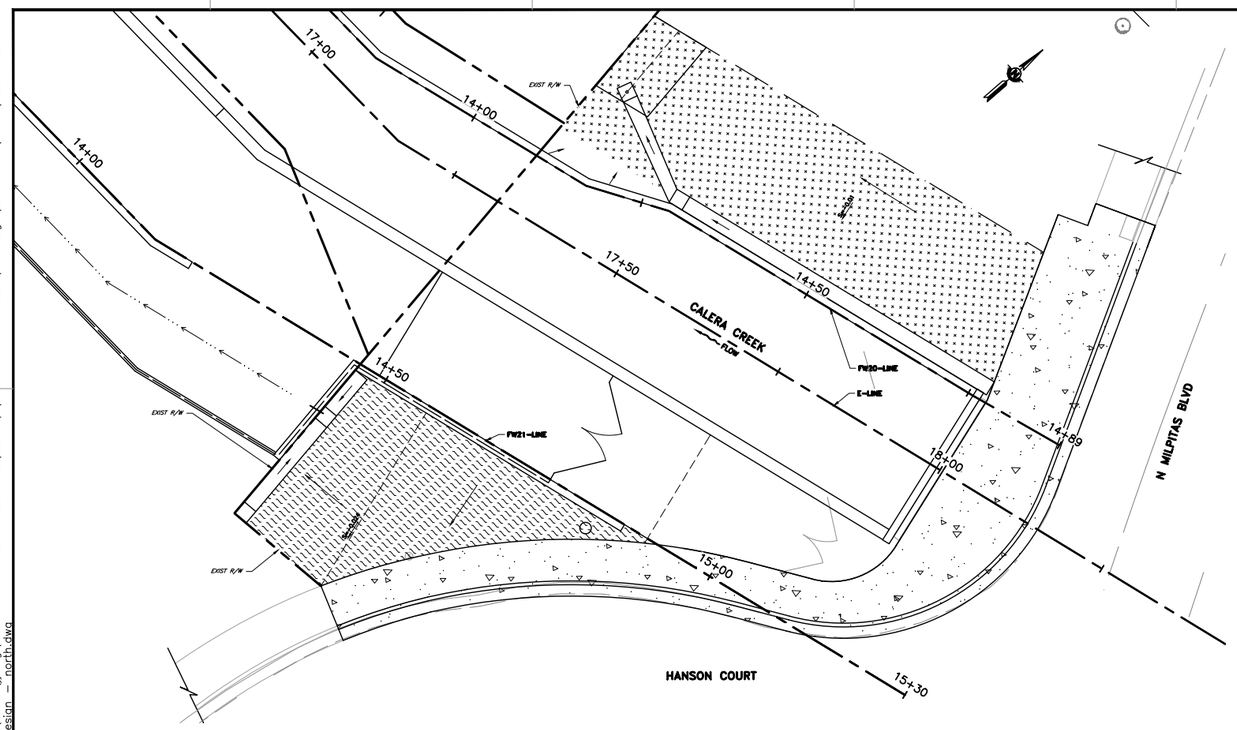

LEGEND

PLANTING AND MULCHING AREA

MULCHING AREA

SEEDMIX						
SCIENTIFIC NAME	COMMON NAME	FORM	BROADCAST SEEDING RATE (LBS/ACRE)	AREA OF PLANTING ZONE (ACRES)	PERCENT COMPOSITION IN SEED MIX	QUANTITY (LBS)
Achillea millefolium	common yarrow	perennial herb	0.3	0.026	10%	0.0008
Clarkia purpurea	purple clarkia	annul herb	2.00	0.026	5%	0.0026
Danthonia californica	California oatgrass	perennial herb	18.00	0.026	15%	0.0699
Eschscholzia californica	California poppy	annual	3.70	0.026	15%	0.0144
Festuca rubra	red fescue	perennial herb	6.00	0.026	15%	0.0233
Gilia capitata	bluehead gilia	annual	3.00	0.026	10%	0.0078
Lupinus bicolor	miniature lupine	annual herb	14.50	0.026	10%	0.0375
Phacelia distans	distant phacelia	annual	1.27	0.026	10%	0.0033
Stipa pulchra	purple needle grass	perennial grass	9.90	0.026	10%	0.0256
TOTAL					100%	0.1850

NOTE:

1. PLANTING ZONE LAYOUT SHALL BE SET PER PLANTING PLAN, SHEET L-10, WITH REFERENCE TO THE SYMBOLS SHOWN IN THE PLANTING SCHEDULE.

2. CONTAINER PLANTS SHALL BE INSTALLED PER PLANTING DETAILS, SHEET L-11.

PLANTING PALETTE AND LEGEND

PLANTING ZONE	SYMBOL	SCIENTIFIC NAME	COMMON NAME	FORM	CONTAINER PLANT SIZE	SPACING (FT)	PERCENT FILL	QUANTITY
UPLAND(NORTH SITE)		*Quercus agrifolia*	coast live oak	tree	container (≥deepot 16)	21	65%	2
		Aesculus californica	California buckeye	tree	container (≥deepot 16)	21	25%	1
	TOTAL TREES						90%	3
		Baccharis pilularis	coyote brush	shrub	container (≥deepot 16)	12	30%	2
		Ceanothus thyrsiflorus	blue blossom	shrub	container (≥deepot 16)	6	10%	3
		Diplacus aurantiacus	orange bush monkeyflowerorange	shrub	container (≥deepot 16)	6	10%	3
		Lupinus albifrons	silver lupine	shrub	container (≥deepot 16)	6	10%	3
		Rhamnus crocea	spiny redberry	shrub	container (≥deepot 16)	6	10%	3
	TOTAL SHRUBS						70%	14
		Achillea millefolium	common yarrow	perennial herb	plug	3	10	13
		Asclepias fascicularis	narrow-leaf milkweed	perennial herb	plug	3	2%	3
		Epilobium canum	California fuchsia	perennial herb	plug	3	2%	3
		Eriogonum fasciculatum	California buckwheat	perennial herb	plug	3	5%	6
		Eriophyllum confertiflorum	golden-yarrow	perennial herb	plug	3	5%	6
		Eschscholzia californica	California poppy	annual	plug	3	5%	6
		Festuca californica	California fescue	perennial herb	plug	3	10%	13
		Melica imperfecta	little California melic	perennial herb	plug	3	10%	13
		Salvia spathacea	California hummingbird sage	perennial herb	plug	3	5%	6
		Stipa pulchra	purple needle grass	perennial herb	plug	3	13%	16
	TOTAL HERBACEOUS						67%	85

USERNAME: Jiiang 12/17/2020 7:35 PM
FILENAME: C:\Users\Jiiang\OneDrive - Stillwater Sciences\Desktop\Lower Calera Landscape Design\CADD files\L-09\Lower Calera Landscape Design - north.dwg

DOCUMENT NUMBER: CAE_CY-L-4018-66029

REV	DESCRIPTION	DATE	APPR.	REFERENCE INFORMATION AND NOTES
	Attachment 4 Page 124 of 144			ABBREVIATIONS ft feet lbs pounds

Stillwater Sciences

DATE 12/11/2020
DESIGN Yuliang Jiang
DRAWN Yuliang Jiang
CHECKED MEK

ENGINEERING CERTIFICATION
REGISTERED LANDSCAPE ARCHITECT JOHN A. ROBERTS No. 1589 STATE OF CALIFORNIA
12/17/20 3/31/21
ENGINEER DATE

SANTA CLARA VALLEY WATER DISTRICT
Valley Water
12/30/2020
PROJECT ENGINEER ACCEPTED BY DISTRICT DATE

PROJECT NAME AND SHEET DESCRIPTION:
LOWER CALERA CREEK FLOOD PROTECTION PROJECT
PLANTING SCHEDULE, NOTES, AND LEGEND

SCALE 1"=10'
VERIFY SCALES BAR IS ONE INCH ON ORIGINAL DRAWING IF NOT ONE INCH ON THIS SHEET, ADJUST SCALES ACCORDINGLY

PROJECT NUMBER 40174005
SHEET CODE: L-09
SHEET NUMBER: 124 OF 144

Attachment 4
Page 124 of 144

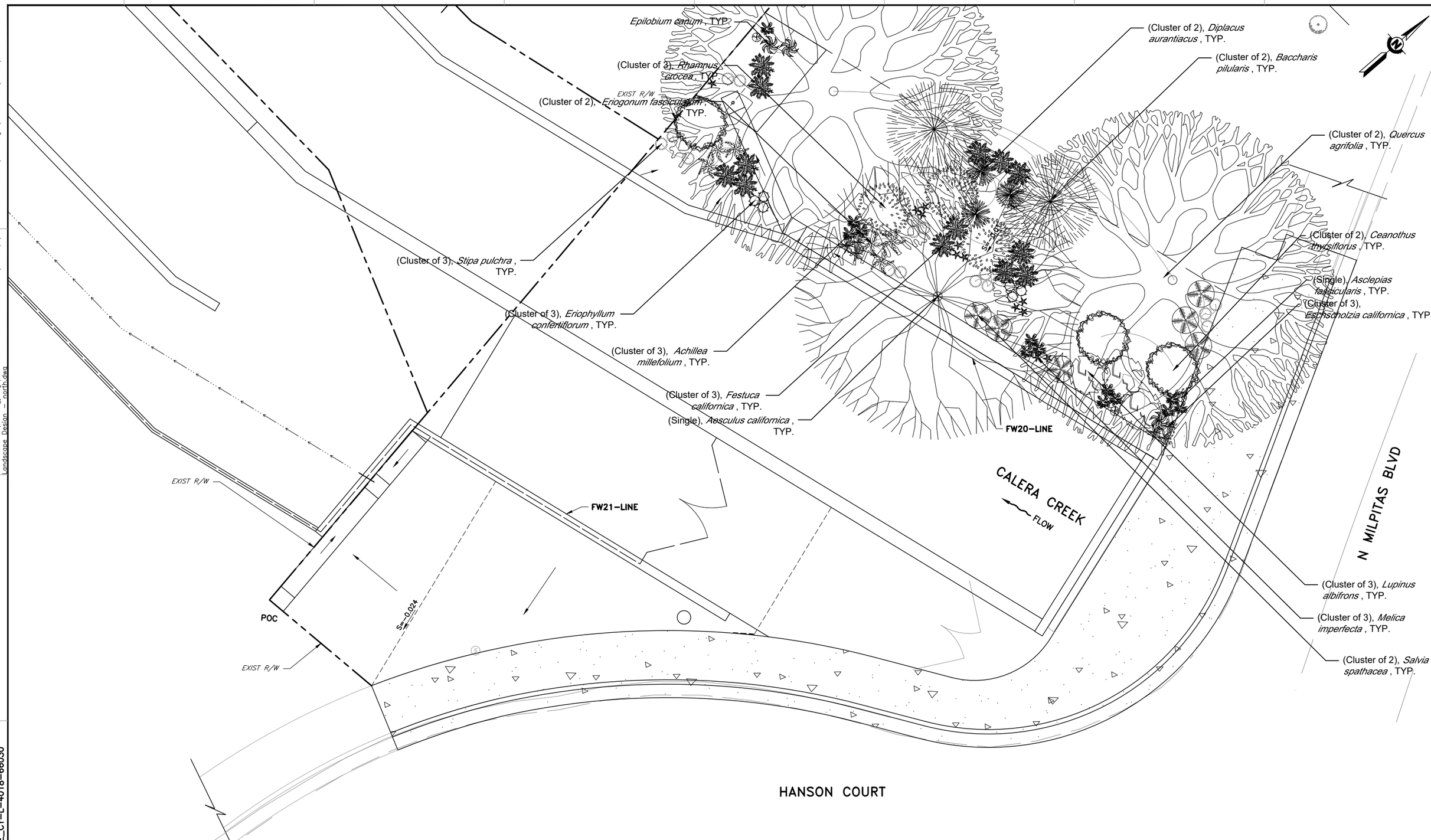

USERNAME: Jjiang 12/17/2020 7:35 PM
FILENAME: C:\Users\jjiang\OneDrive - Stillwater Sciences\Desktop\Lower Calera Landscape Design\CADD files\L-09\Lower Calera Landscape Design - north.dwg

DOCUMENT NUMBER: CAE_CY-L-4018-66030

REV	DESCRIPTION	DATE	APPR.
	Attachment 4 Page 125 of 144		

REFERENCE INFORMATION AND NOTES
1. SEE SHEET L-01 FOR PLANTING SCHEDULE AND AND PLANT SYMBOLS.
2. SEE SHEET L-03 FOR PLANTING DETAILS.
3. IF NEEDED, TREE PLANTING LOCATIONS SHALL BE ADJUSTED BY THE CONTRACTOR SUCH THAT NEW TREES ARE A MINIMUM OF THREE FEET FROM GROUND OUT TREE STUMP LOCATIONS.

Stillwater Sciences

DATE 12/11/2020
DESIGN Yuliang Jiang
DRAWN Yuliang Jiang
CHECKED MEK

ENGINEERING CERTIFICATION
REGISTERED LANDSCAPE ARCHITECT
JOHN W. ROBERTS - No. 1680
Signature
12/17/20 3/31/21
Date Exp.
STATE OF CALIFORNIA
ENGINEER DATE

SANTA CLARA VALLEY WATER DISTRICT
Valley Water
Karl Nemr 12/30/2020
PROJECT ENGINEER ACCEPTED BY DISTRICT DATE

PROJECT NAME AND SHEET DESCRIPTION:
LOWER CALERA CREEK FLOOD PROTECTION PROJECT
PLANTING PLAN

SCALE 1"=5'
VERIFY SCALES
0 1"
BAR IS ONE INCH ON ORIGINAL DRAWING
IF NOT ONE INCH ON THIS SHEET, ADJUST SCALES ACCORDINGLY

PROJECT NUMBER 40174005
SHEET CODE: L-10
SHEET NUMBER: 125 OF 144

Attachment 4
Page 125 of 144

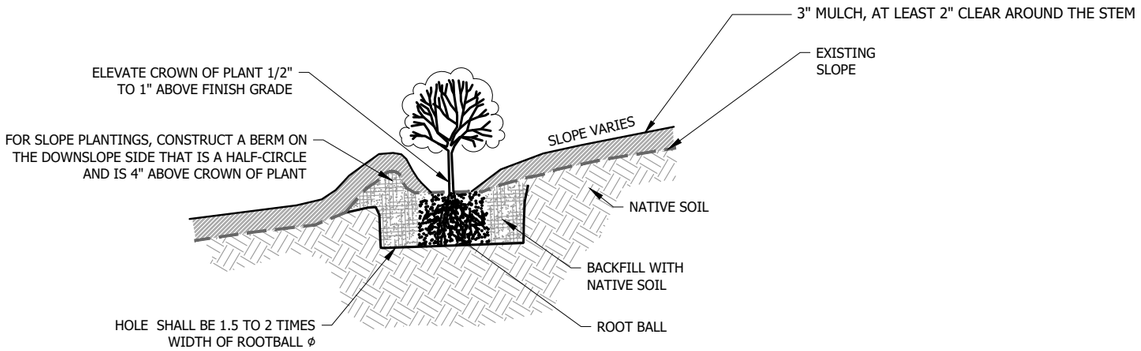

2 **CONTAINER PLANTING**
NTS

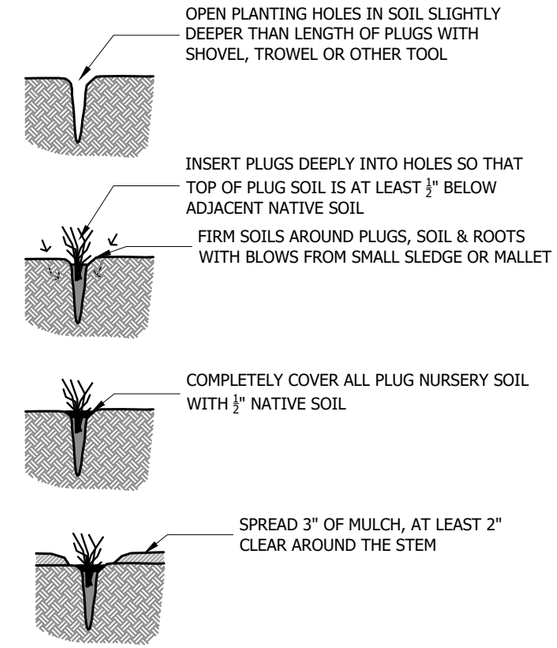

1 **PLUG PLANTING**
NTS

PLANTING NOTES:

1. SEE SPECIFICATIONS FOR ITEMS NOT COVERED ON THESE PLANS.

2. ALL PLANT MATERIAL IS TO BE SUPPLIED BY THE LANDSCAPE CONTRACTOR.

3. PLANTS SHALL BE SUBJECT TO INSPECTION AND APPROVAL UPON DELIVERY TO SITE.

4. PLANT MATERIAL LOCATIONS ON THE PLANTING PLAN ARE APPROXIMATE AND SHALL BE ADJUSTED AS DIRECTED ON SITE.

5. BUDS AND BLOOMS ON ALL PLANTS MUST BE PROTECTED AT ALL TIMES, INCLUDING TRANSPORTATION AND INSTALLATION.

6. TREES AND SHRUBS MAY BE LIGHTLY PRUNED DURING THE 60-DAY MAINTENANCE PERIOD AS DIRECTED BY THE LANDSCAPE ARCHITECT. PRUNING SHALL ONLY BE USED TO ELIMINATE CROSSOVER LIMBS, CO-DOMINANT LEADERS, AND BROKEN OR DEAD BRANCHES.

7. MULCH SHALL BE ORGANIC, WEED-FREE MULCH WITH A ONE-HALF (1/2) INCH MINIMUM AND THREE (3) INCH MAXIMUM PARTICLE SIZE AND LOW SALT OCNTENT. MULCH SHALL NOT BE MADE OF PLANT MATERIALS WITH ALLOPATHIC CHEMICLAS. MULCH SHALL BE MADE FROM RECYCLED, KILN-DRIED WOOD PRODUCTS.

8. MULCH SHALL BE INSTALLED IN AN APPROXIMATE THREE-INCH LAYER. MULCH SHALL BE KEPT 2-6 INCHES AWAY FROM PLANT STEMS.

USERNAME: Jjiang 12/17/2020 7:35 PM
FILENAME: C:\Users\jjiang\OneDrive - Stillwater Sciences\Desktop\Lower Calera Landscape Design\CADD files\L-09\Lower Calera Landscape Design - north.dwg
DOCUMENT NUMBER: CAE_CY-L-4018-66031

REV	DESCRIPTION	DATE	APPR.	REFERENCE INFORMATION AND NOTES
	Attachment 4 Page 126 of 144			

Stillwater Sciences

DATE 12/11/2020
DESIGN Yuliang Jiang
DRAWN Yuliang Jiang
CHECKED MEK

ENGINEERING CERTIFICATION
REGISTERED LANDSCAPE ARCHITECT — STATE OF CALIFORNIA
ENGINEER DATE

SANTA CLARA VALLEY WATER DISTRICT
Valley Water
12/30/2020
PROJECT ENGINEER ACCEPTED BY DISTRICT DATE

PROJECT NAME AND SHEET DESCRIPTION:
LOWER CALERA CREEK FLOOD PROTECTION PROJECT
PLANTING DETAILS

SCALE VARIES
VERIFY SCALES
BAR IS ONE INCH ON ORIGINAL DRAWING
IF NOT ONE INCH ON THIS SHEET, ADJUST SCALES ACCORDINGLY

PROJECT NUMBER 40174005
SHEET CODE: L-11
SHEET NUMBER: 126 OF 144

Attachment 4
Page 126 of 144

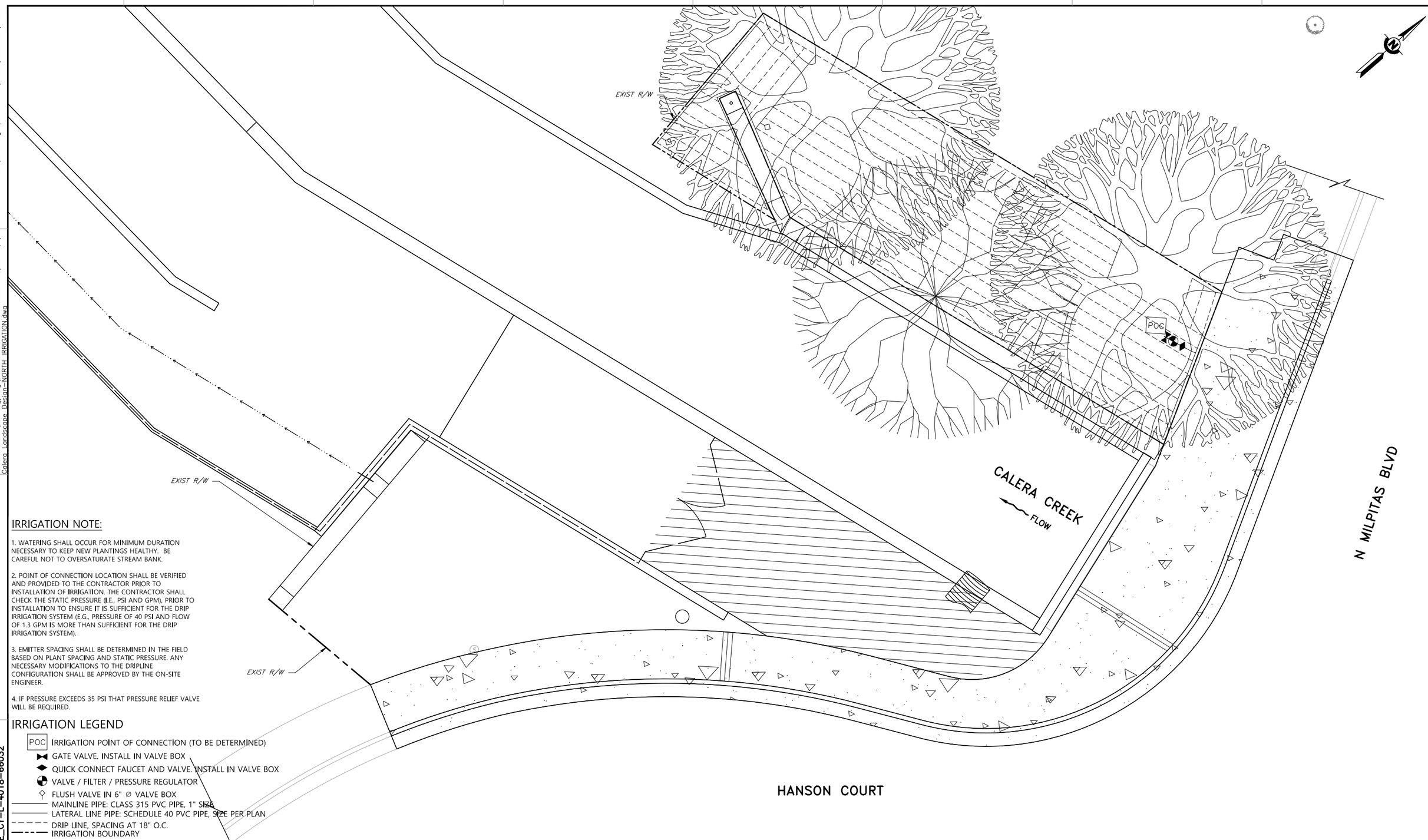

IRRIGATION NOTE:

1. WATERING SHALL OCCUR FOR MINIMUM DURATION NECESSARY TO KEEP NEW PLANTINGS HEALTHY. BE CAREFUL NOT TO OVERSATURATE STREAM BANK.

2. POINT OF CONNECTION LOCATION SHALL BE VERIFIED AND PROVIDED TO THE CONTRACTOR PRIOR TO INSTALLATION OF IRRIGATION. THE CONTRACTOR SHALL CHECK THE STATIC PRESSURE (I.E., PSI AND GPM), PRIOR TO INSTALLATION TO ENSURE IT IS SUFFICIENT FOR THE DRIP IRRIGATION SYSTEM (E.G., PRESSURE OF 40 PSI AND FLOW OF 1.3 GPM IS MORE THAN SUFFICIENT FOR THE DRIP IRRIGATION SYSTEM).

3. EMITTER SPACING SHALL BE DETERMINED IN THE FIELD BASED ON PLANT SPACING AND STATIC PRESSURE. ANY NECESSARY MODIFICATIONS TO THE DRIPLINE CONFIGURATION SHALL BE APPROVED BY THE ON-SITE ENGINEER.

4. IF PRESSURE EXCEEDS 35 PSI THAT PRESSURE RELIEF VALVE WILL BE REQUIRED.

IRRIGATION LEGEND

- POC — IRRIGATION POINT OF CONNECTION (TO BE DETERMINED)
- GATE VALVE. INSTALL IN VALVE BOX
- QUICK CONNECT FAUCET AND VALVE. INSTALL IN VALVE BOX
- VALVE / FILTER / PRESSURE REGULATOR
- FLUSH VALVE IN 6" ⌀ VALVE BOX
- MAINLINE PIPE: CLASS 315 PVC PIPE, 1" SIZE
- LATERAL LINE PIPE: SCHEDULE 40 PVC PIPE, SIZE PER PLAN
- DRIP LINE, SPACING AT 18" O.C.
- IRRIGATION BOUNDARY

REV	DESCRIPTION	DATE	APPR.	REFERENCE INFORMATION AND NOTES
	Attachment 4 Page 127 of 144			

Stillwater Sciences

DATE 12/11/2020
DESIGN Yuliang Jiang
DRAWN Yuliang Jiang
CHECKED MEK

ENGINEERING CERTIFICATION
REGISTERED LANDSCAPE ARCHITECT — JOHN N. ROBERTS — No. 1690 — STATE OF CALIFORNIA
12/17/20 3/31/21
ENGINEER DATE

SANTA CLARA VALLEY WATER DISTRICT
Valley Water
12/30/2020
PROJECT ENGINEER ACCEPTED BY DISTRICT DATE

PROJECT NAME AND SHEET DESCRIPTION:
LOWER CALERA CREEK FLOOD PROTECTION PROJECT
IRRIGATION PLAN

SCALE 1"=5'
VERIFY SCALES
BAR IS ONE INCH ON ORIGINAL DRAWING
IF NOT ONE INCH ON THIS SHEET, ADJUST SCALES ACCORDINGLY

PROJECT NUMBER 40174005
SHEET CODE: L-12
SHEET NUMBER: 127 OF 144

Attachment 4
Page 127 of 144

DOCUMENT NUMBER: CAE_CY-L-4018-66032

USERNAME: Jjiang 12/17/2020 7:35 PM
FILENAME: C:\Users\jjiang\OneDrive - Stillwater Sciences\Desktop\Lower Calera Landscape Design\CADD files\L-09\feedback\Lower Calera Landscape Design-NORTH IRRIGATION.dwg

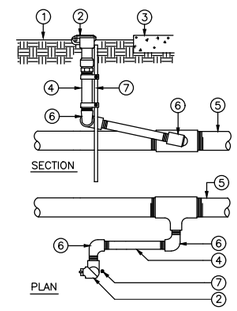

1. FINISH GRADE
2. QUICK COUPLER FLUSH WITH FINISH GRADE
3. PAVING OR VALVE BOX
4. 12" GALV. NIPPLE
5. MAIN LINE
6. GALV. ELL – 1"
7. 3/4" GALV. PIPE, 2' MIN. DEPTH, SECURE WITH WORM DRIVE CLAMPS.

QUICK–COUPLING VALVE (E / –)
SCALE: NO SCALE

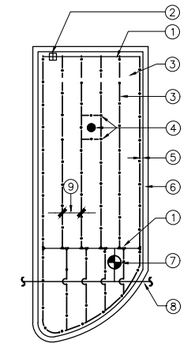

1. SCH. 40 PURPLE PVC LATERAL WITH COMPRESSION TEE FITTINGS TO DRIPLINE. CONNECT TO OTHER PLANTING BEDS ON CIRCUIT.
2. FLUSH VALVE
3. DRIP LINE W/ EMITTERS – LAY OUT SO EMITTERS ARE TRIANGULATED.
4. TREE IN BED – SURROUND ROOTBALL W/ DRIPLINE
5. LAYOUT DRIPLINE 4" INSIDE ALL PLANTER EDGES
6. PLANTER EDGE
7. VALVE / FILTER / PRESSURE REGULATOR ASSEMBLY. INSTALL AT MID–POINT OF CIRCUIT
8. MAINLINE
9. SPACING BETWEEN LINES – 12/18" SEE PLAN

DRIPLINE LAYOUT (A / –)
SCALE: NO SCALE

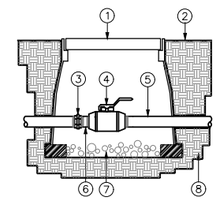

1. PLASTIC VALVE BOX WITH LOCKING LID
2. FINISH GRADE
3. PVC UNION
4. BALL VALVE
5. MAIN LINE
6. PVC SCH. 80 NIPPLE
7. FILL BOTTOM OF BOX W/ 3" DEPTH DRAIN ROCK
8. BRICK TO SUPPORT BOX

BALL VALVE (F / –)
SCALE: NO SCALE

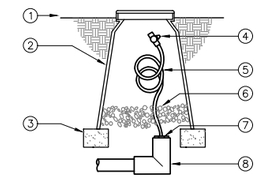

1. FINISH GRADE
2. 10" ROUND VALVE BOX
3. BRICK SUPPORTS AS REQUIRED
4. PVC BALL (SxS) FLUSH VALVE
5. IPS PVC FLEX TUBING
6. DRAIN ROCK 8" MIN. DEPTH
7. REDUCER BUSHING
8. PVC PIPING AND FITTINGS

FLUSH (EXHAUST) VALVE (B / –)
SCALE: NO SCALE

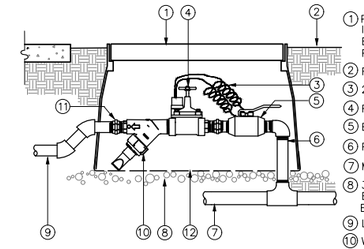

1. PLASTIC VALVE BOX – INSTALL PARALLEL TO EDGES & ADJACENT TO PAVING WHERE POSSIBLE
2. FINISH GRADE
3. 24" COILED WIRE SLACK
4. REMOTE CONTROL VALVE
5. BALL VALVE
6. PVC SCH. 80 NIPPLE
7. MAIN LINE
8. 3" DEPTH DRAIN ROCK EXTEND 4" BEYOND VALVE BOX ALL SIDES FOR SUPPORT
9. LATERAL
10. WYE FILTER
11. PVC UNION, TYP. (2 ea.)
12. 1/2" GALV. WIRE MESH GOPHER SCREEN – WRAP UP SIDES 4" MIN.

NOTE: BUNDLE & TAPE WIRE EVERY 10 FT. SEAL WIRE ENDS WITH SPLICING MATERIAL.

REMOTE CONTROL VALVE (DRIP) (C / –)
SCALE: NO SCALE

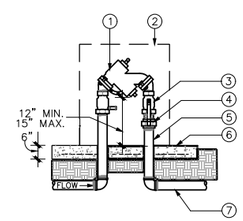

1. BACKFLOW PREVENTER
2. STRONG BOX ENCLOSURE W/ LOCKING HASP
3. BALL VALVE SHUT OFFS
4. GALVANIZED UNION
5. GALVANIZED NIPPLES
6. CONCRETE PAD – EXTEND 6" BEYOND ENCLOSURE ALL SIDES.
7. GALVANIZED ELLS

BACKFLOW PREVENTION DEVICE (D / –)
SCALE: NO SCALE

REV	DESCRIPTION	DATE	APPR.	REFERENCE INFORMATION AND NOTES
	Attachment 4 Page 128 of 144			

Stillwater Sciences

DATE 12/11/2020
DESIGN Yuliang Jiang
DRAWN Yuliang Jiang
CHECKED MEK

ENGINEERING CERTIFICATION
REGISTERED LANDSCAPE ARCHITECT — JOHN W. ROBERTS — No. 1894 — STATE OF CALIFORNIA
Signature 12/17/20 3/31/21 Date Exp.
ENGINEER DATE

SANTA CLARA VALLEY WATER DISTRICT
Valley Water
Karl Nem 12/30/2020
PROJECT ENGINEER ACCEPTED BY DISTRICT DATE

PROJECT NAME AND SHEET DESCRIPTION:
LOWER CALERA CREEK FLOOD PROTECTION PROJECT
IRRIGATION DETAILS

SCALE: VARIES
VERIFY SCALES: BAR IS ONE INCH ON ORIGINAL DRAWING. IF NOT ONE INCH ON THIS SHEET, ADJUST SCALES ACCORDINGLY
PROJECT NUMBER: 40174005
SHEET CODE: L–13
SHEET NUMBER: 128 OF 144

USERNAME: Jiliang 12/17/2020 7:35 PM
FILENAME: C:\Users\Jiliang\OneDrive – Stillwater Sciences\Desktop\Lower Calera Landscape Design\CADD files\L–09\feedback\Lower Calera Landscape Design–NORTH IRRIGATION.dwg

DOCUMENT NUMBER: CAE_CY–L–4018–66033

NOTES:

1. SEE SPECIFICATION SECTION 32 ESTABLISHMENT MAINTENANCE FOR MAINTENANCE REQUIREMENTS.
2. SEE ARTICLE 32.02.01.B OF THE PROJECT SPECIFICATIONS FOR VEGETATION MAINTENANCE REQUIREMENTS ALONG CREEK BANKS, MAINTENANCE ROADS, AND SHOULDER AREAS.
3. SEE ARTICLE 32.02.01.C OF THE PROJECT SPECIFICATIONS FOR VEGETATION MAINTENANCE REQUIREMENTS WITHIN THE LOW FLOW CHANNEL.

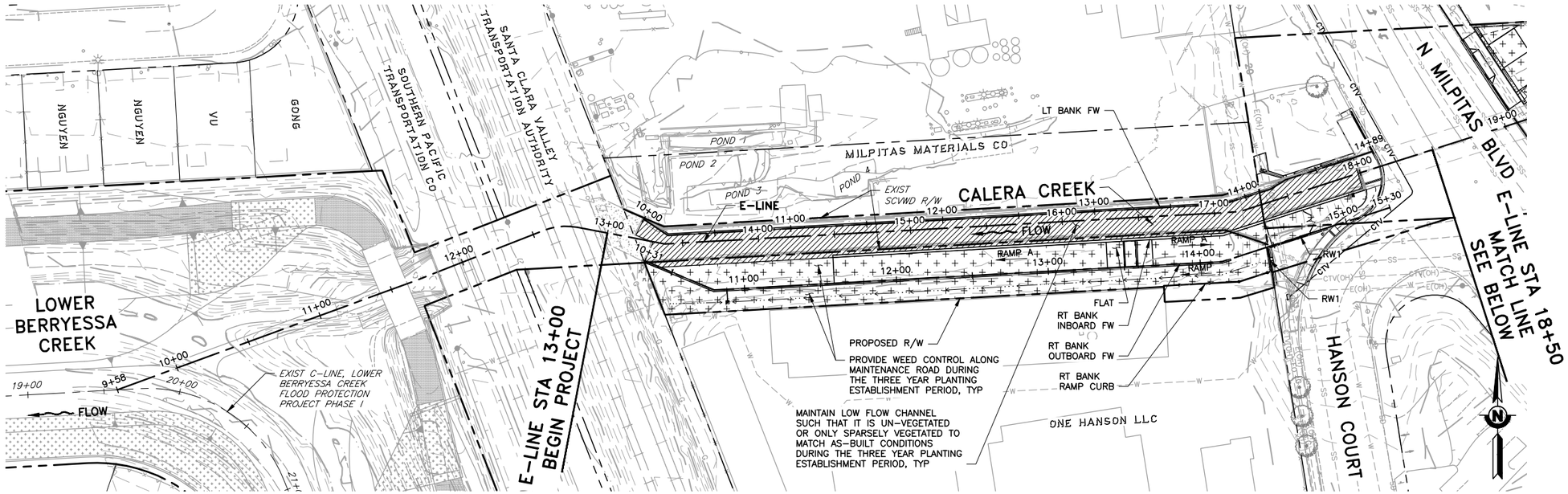

PLAN

SCALE: 1" = 40'

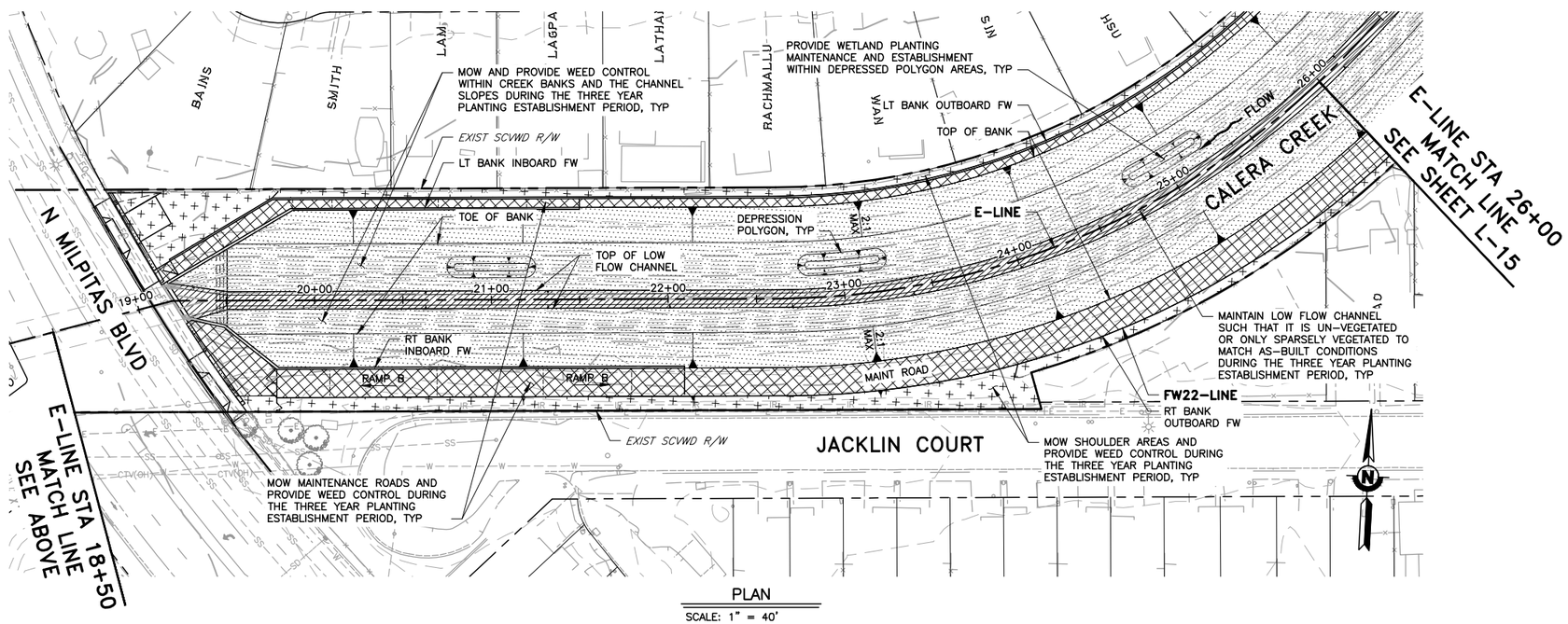

PLAN

SCALE: 1" = 40'

REV	DESCRIPTION	DATE	APPR

REFERENCE INFORMATION AND NOTES

1. AERIAL PHOTOGRAMMETRIC IMAGERY WAS TAKEN JULY, 2008.
2. LEFT AND RIGHT BANKS ARE VIEWED LOOKING UPSTREAM.

DATE 12/30/2020
DESIGN Y. LEE
DRAWN J. FORD
CHECKED Y. LEE

ENGINEERING CERTIFICATION

REGISTERED PROFESSIONAL ENGINEER TOUHAN LEE No. C42456 CIVIL STATE OF CALIFORNIA

PROJECT ENGINEER — DATE 12.30.2020

SANTA CLARA VALLEY WATER DISTRICT

Valley Water

PROJECT NAME AND SHEET DESCRIPTION:

LOWER CALERA CREEK FLOOD PROTECTION PROJECT

ESTABLISHMENT MAINTENANCE

SCALE: AS SHOWN

VERIFY SCALES: 0 — 1"

IF NOT ONE INCH ON ORIGINAL DRAWING THIS SHEET, ADJUST SCALES ACCORDINGLY

PROJECT NUMBER: 40174005

SHEET CODE: L-14

SHEET NUMBER: 129 OF 144

DOCUMENT NUMBER: CAE_CY-L-4018-66034

USERNAME: Jennford 12/24/2020-1:51 PM
FILENAME: K:\Active Projects\MP-40174005\Lower Calera Creek Project\SHEETS\L-14.dwg

NOTES:

1. SEE SPECIFICATION SECTION 32 ESTABLISHMENT MAINTENANCE FOR MAINTENANCE REQUIREMENTS.
2. SEE ARTICLE 32.02.01.B OF THE PROJECT SPECIFICATIONS FOR VEGETATION MAINTENANCE REQUIREMENTS ALONG CREEK BANKS, MAINTENANCE ROADS, AND SHOULDER AREAS.
3. SEE ARTICLE 32.02.01.C OF THE PROJECT SPECIFICATIONS FOR VEGETATION MAINTENANCE REQUIREMENTS WITHIN THE LOW FLOW CHANNEL.

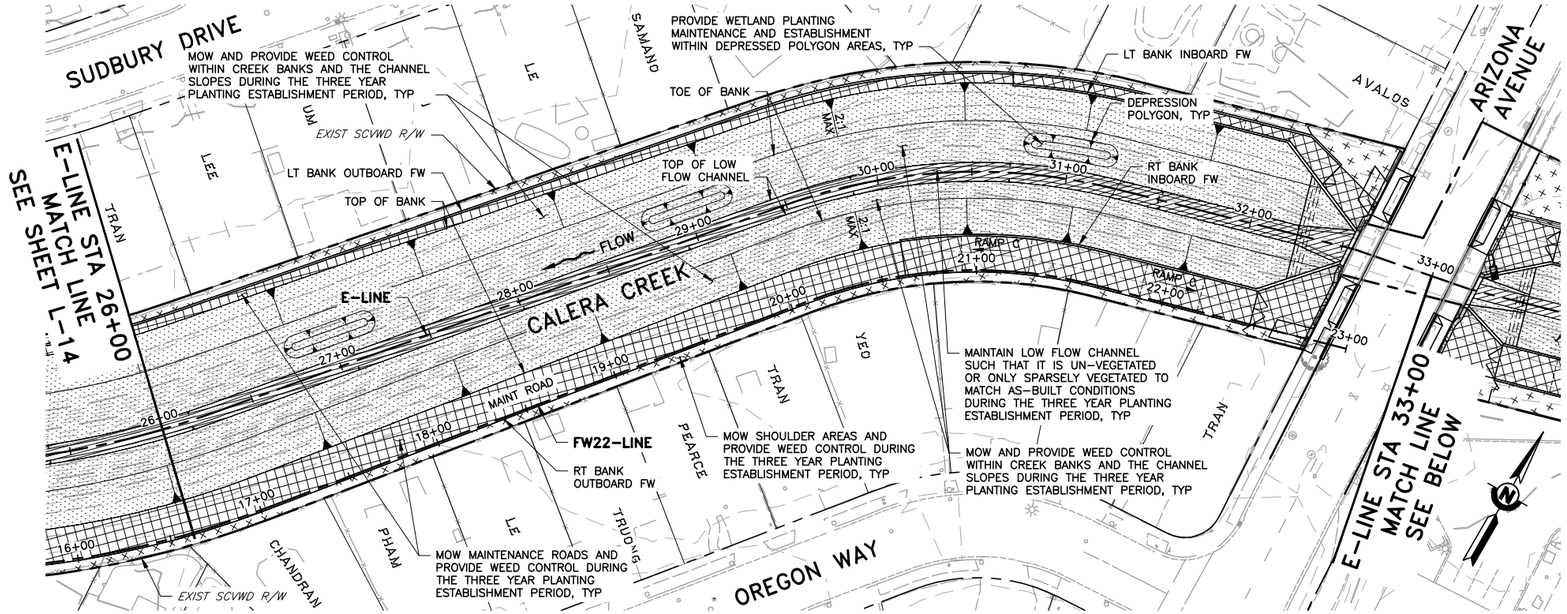

PLAN

SCALE: 1" = 40'

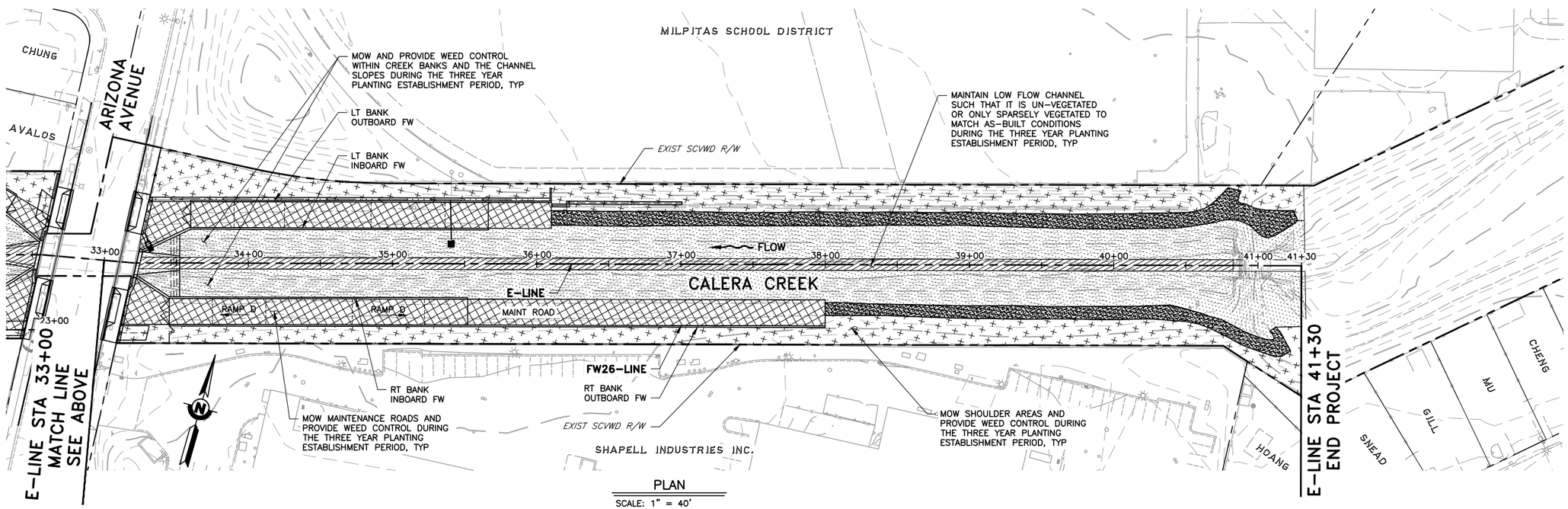

PLAN

SCALE: 1" = 40'

REV	DESCRIPTION	DATE	APPR

REFERENCE INFORMATION AND NOTES

1. AERIAL PHOTOGRAMMETRIC IMAGERY WAS TAKEN JULY, 2008.
2. LEFT AND RIGHT BANKS ARE VIEWED LOOKING UPSTREAM.

DATE 12/30/2020
DESIGN Y. LEE
DRAWN J. FORD
CHECKED Y. LEE

ENGINEERING CERTIFICATION

REGISTERED PROFESSIONAL ENGINEER TOUHAN LEE No. C42456 CIVIL STATE OF CALIFORNIA

PROJECT ENGINEER — DATE 12.30.2020

SANTA CLARA VALLEY WATER DISTRICT

Valley Water

PROJECT NAME AND SHEET DESCRIPTION:

LOWER CALERA CREEK FLOOD PROTECTION PROJECT

ESTABLISHMENT MAINTENANCE

SCALE: AS SHOWN

VERIFY SCALES: 0 — 1"

IF NOT ONE INCH ON ORIGINAL DRAWING IF NOT ONE INCH ON THIS SHEET, ADJUST SCALES ACCORDINGLY

PROJECT NUMBER: 40174005

SHEET CODE: L-15

SHEET NUMBER: 130 OF 144

DOCUMENT NUMBER: CAE_CY-L-4018-66035

USERNAME: Jennford 12/24/2020 1:59 PM
FILENAME: K:\Active Projects\MP-40174005\Lower Calera Creek Project\SHEETS\L-15.dwg

Attachment 4
Page 130 of 144

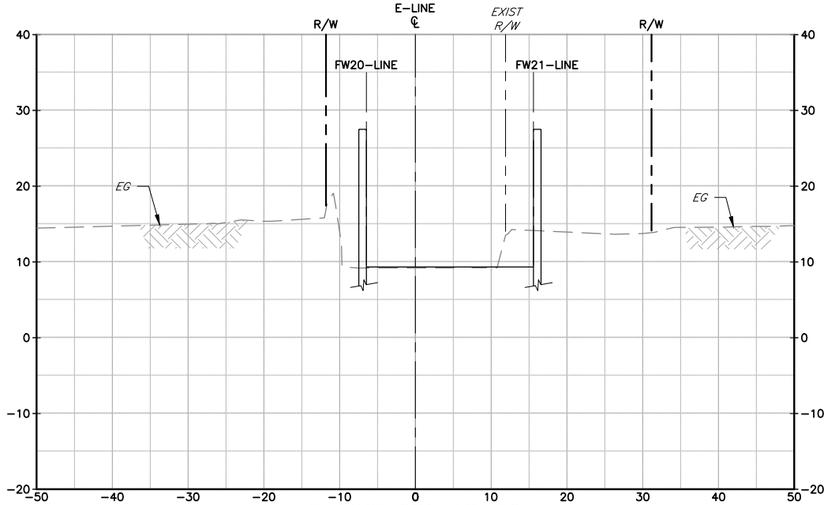

E-LINE STA 13+38

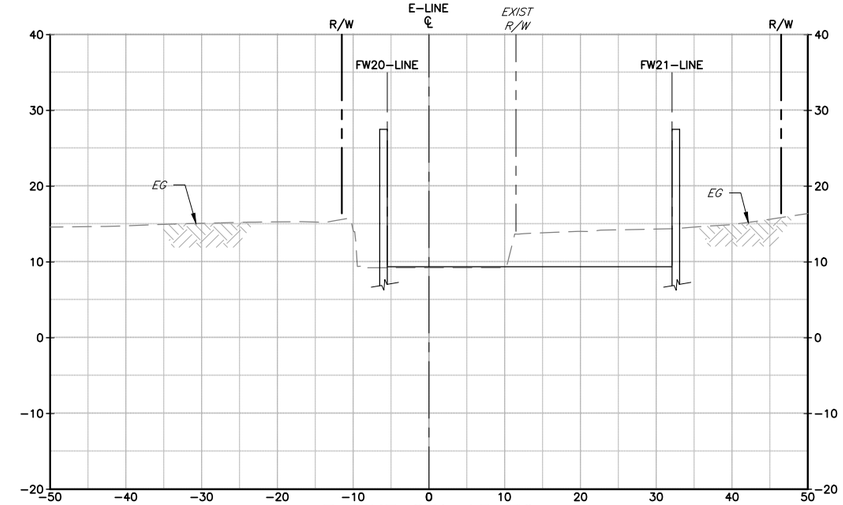

E-LINE STA 13+70

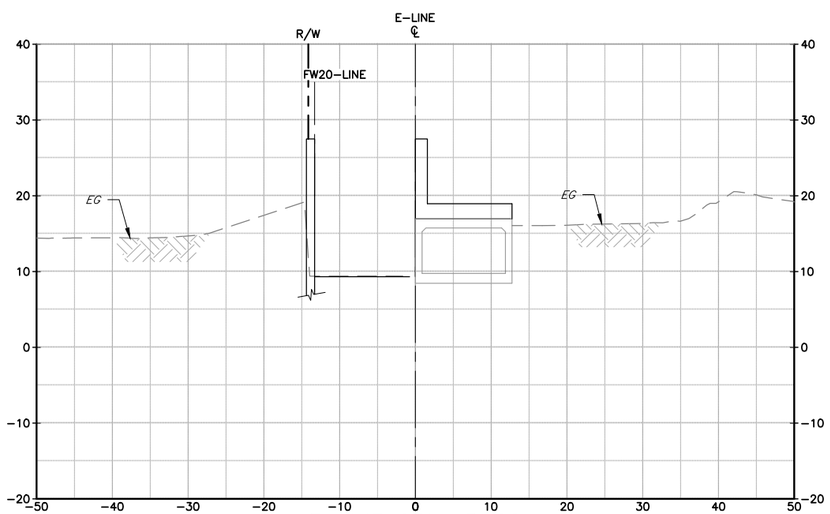

E-LINE STA 13+22

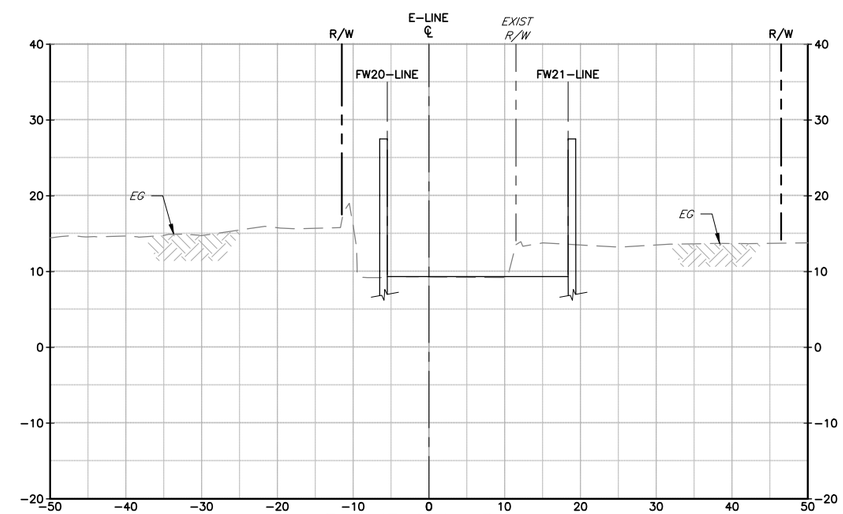

E-LINE STA 13+41

SECTIONS

SCALE: 1" = 10'

REV	DESCRIPTION	DATE	APPR

REFERENCE INFORMATION AND NOTES

1. CROSS SECTIONS ARE VIEWED LOOKING UPSTREAM.

DATE 12/30/2020
DESIGN Y. LEE
DRAWN J. FORD
CHECKED Y. LEE

ENGINEERING CERTIFICATION

REGISTERED PROFESSIONAL ENGINEER YOUHAN LEE No. C42456 CIVIL STATE OF CALIFORNIA

12.30.2020

PROJECT ENGINEER DATE

SANTA CLARA VALLEY WATER DISTRICT

Valley Water

PROJECT NAME AND SHEET DESCRIPTION:

LOWER CALERA CREEK FLOOD PROTECTION PROJECT

CROSS SECTIONS

SCALE AS SHOWN

VERIFY SCALES 0 1"

BAR IS ONE INCH ON ORIGINAL DRAWING IF NOT ONE INCH ON THIS SHEET, ADJUST SCALES ACCORDINGLY

PROJECT NUMBER 40174005

SHEET CODE: X-01

SHEET NUMBER: 131 OF 144

Attachment 4
Page 131 of 144

USERNAME: Jennford 12/23/2020 4:08 PM
FILENAME: K:\Active Projects\MP-40174005\Lower Calera Creek Project\SHEETS\X-01.dwg
DOCUMENT NUMBER: CAE_CY-X-4018-66036

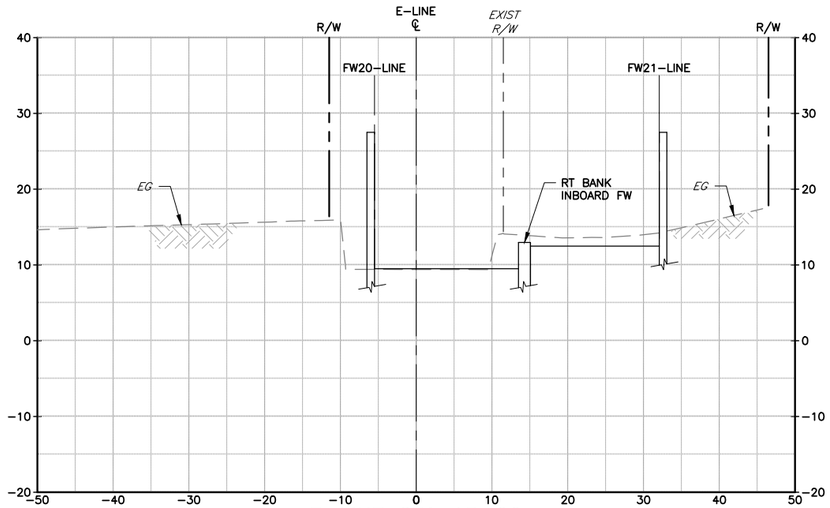

E-LINE STA 15+00

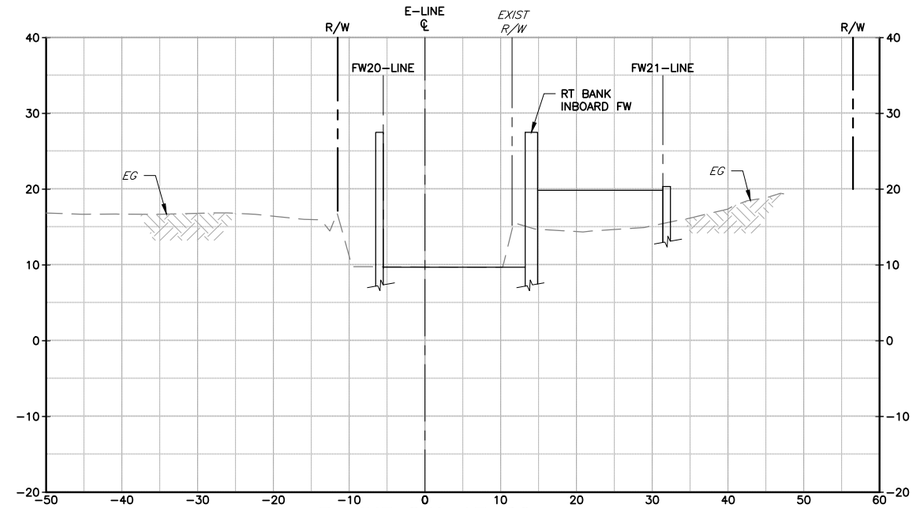

E-LINE STA 17+06

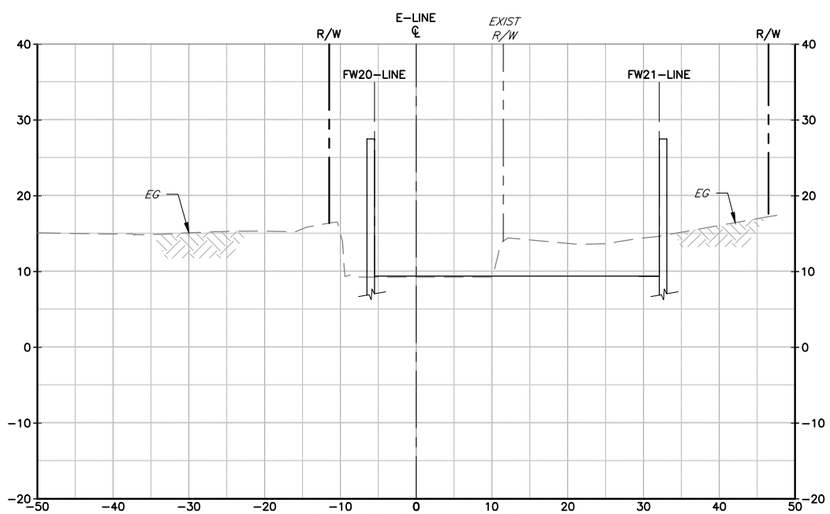

E-LINE STA 14+00

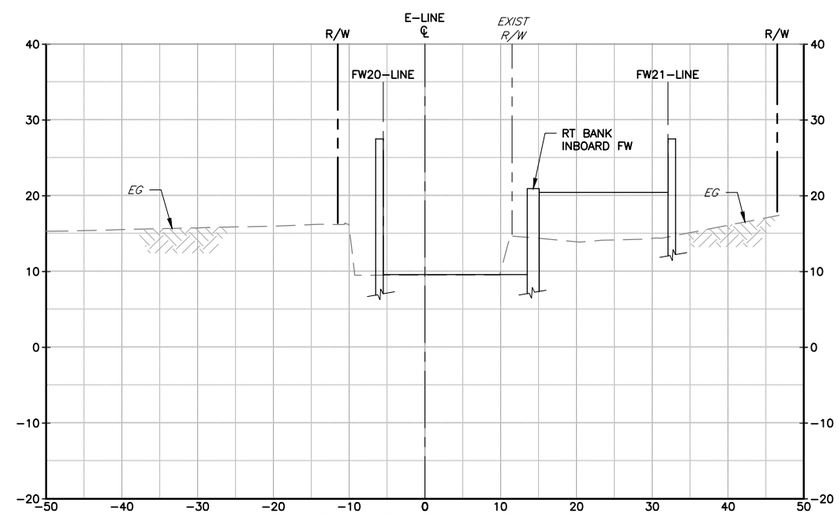

E-LINE STA 16+00

SECTIONS

SCALE: 1" = 10'

REV	DESCRIPTION	DATE	APPR

REFERENCE INFORMATION AND NOTES

1. CROSS SECTIONS ARE VIEWED LOOKING UPSTREAM.

DATE 12/30/2020
DESIGN Y. LEE
DRAWN J. FORD
CHECKED Y. LEE

ENGINEERING CERTIFICATION

REGISTERED PROFESSIONAL ENGINEER YOUHAN LEE No. C42456 CIVIL STATE OF CALIFORNIA

PROJECT ENGINEER — DATE 12.30.2020

SANTA CLARA VALLEY WATER DISTRICT

Valley Water

PROJECT NAME AND SHEET DESCRIPTION:

LOWER CALERA CREEK FLOOD PROTECTION PROJECT

CROSS SECTIONS

SCALE: AS SHOWN

VERIFY SCALES: 0 — 1"

IF THIS LINE 1 INCH ON ORIGINAL DRAWING IS NOT 1 INCH ON THIS SHEET, ADJUST SCALES ACCORDINGLY

PROJECT NUMBER: 40174005

SHEET CODE: X-02

SHEET NUMBER: 132 OF 144

DOCUMENT NUMBER: CAE_CY-X-4018-66037

USERNAME: Jennford 12/23/2020 4:08 PM
FILENAME: K:\Active Projects\MP-40174005\Lower Calera Creek Project\SHEETS\X-02.dwg

Attachment 4
Page 132 of 144

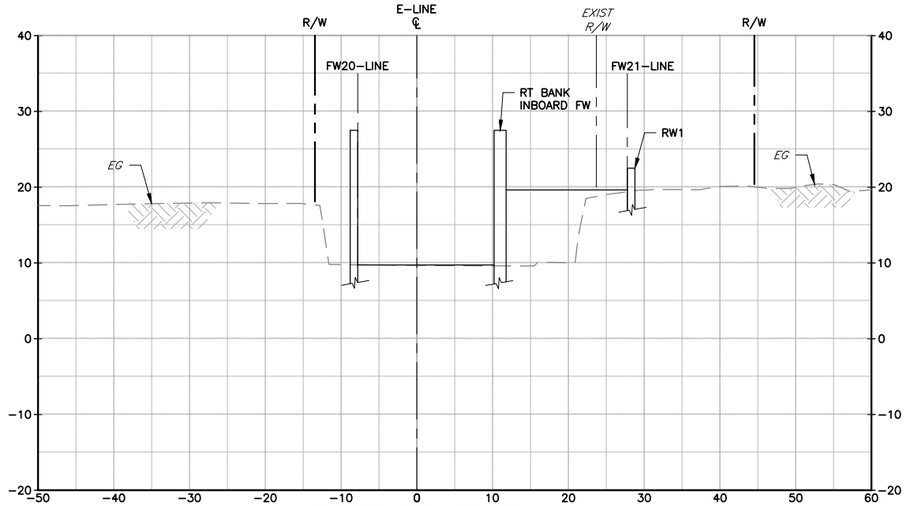

E-LINE STA 17+28

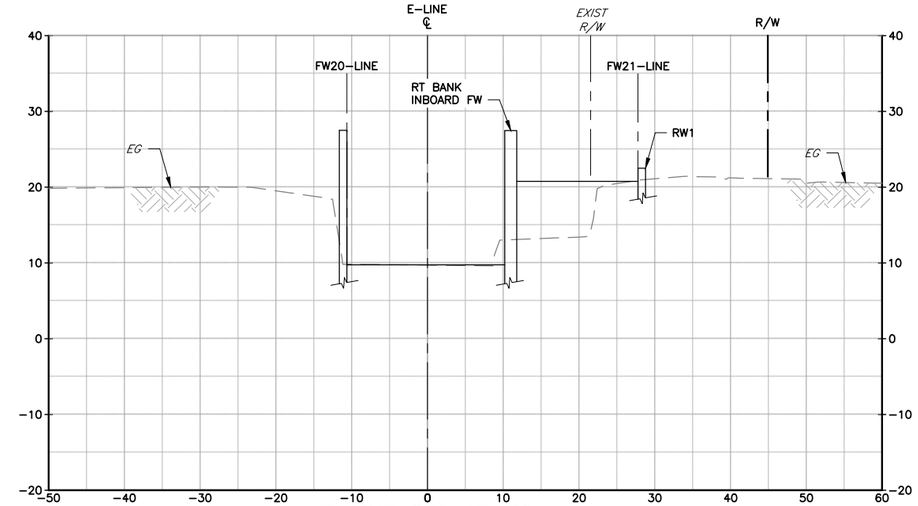

E-LINE STA 17+52

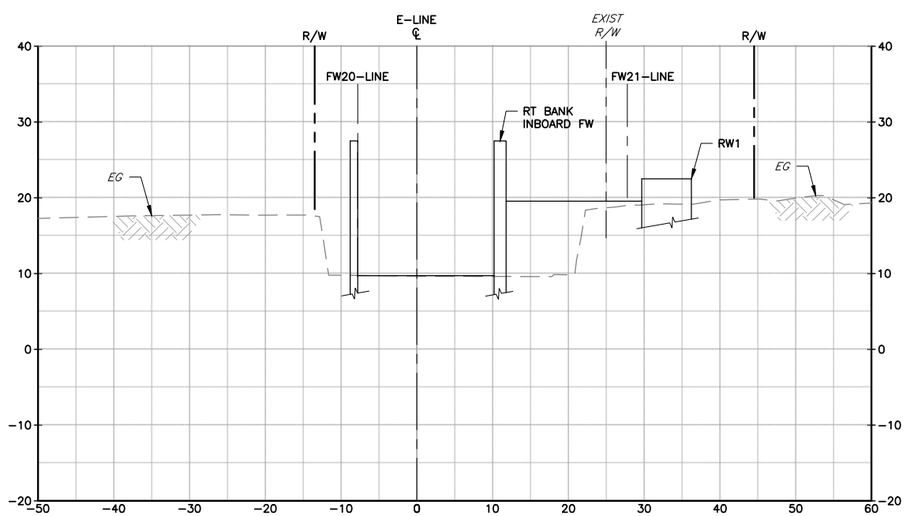

E-LINE STA 17+26

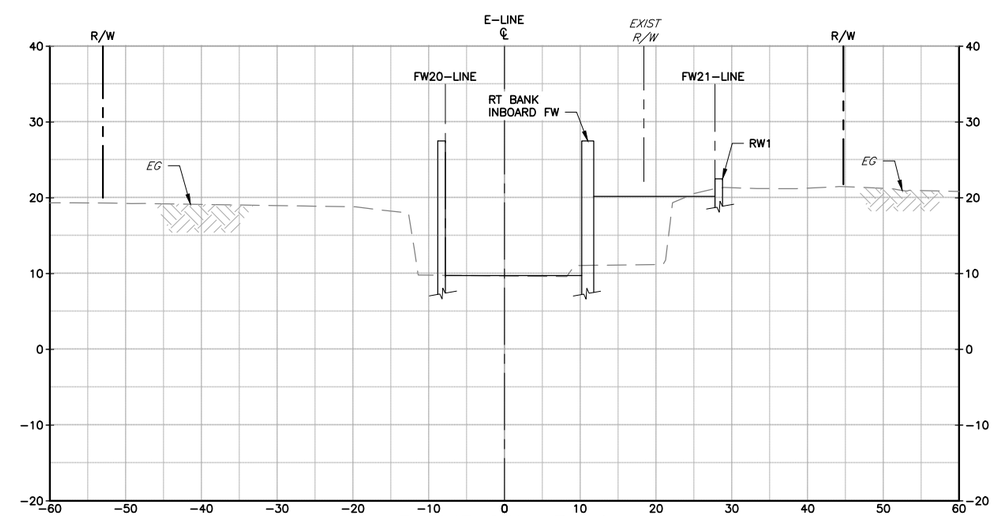

E-LINE STA 17+40

SECTIONS

SCALE: 1" = 10'

REV	DESCRIPTION	DATE	APPR

REFERENCE INFORMATION AND NOTES

1. CROSS SECTIONS ARE VIEWED LOOKING UPSTREAM.

DATE 12/30/2020
DESIGN Y. LEE
DRAWN J. FORD
CHECKED Y. LEE

ENGINEERING CERTIFICATION

REGISTERED PROFESSIONAL ENGINEER YOUHAN LEE No. C42456 CIVIL STATE OF CALIFORNIA

PROJECT ENGINEER — DATE 12.30.2020

SANTA CLARA VALLEY WATER DISTRICT

Valley Water

PROJECT NAME AND SHEET DESCRIPTION:

LOWER CALERA CREEK FLOOD PROTECTION PROJECT

CROSS SECTIONS

SCALE: AS SHOWN

VERIFY SCALES: 0 — 1"

IF NOT ONE INCH ON ORIGINAL DRAWING, ADJUST SCALES ACCORDINGLY

PROJECT NUMBER: 40174005

SHEET CODE: X-03

SHEET NUMBER: 133 OF 144

DOCUMENT NUMBER: CAE_CY-X-4018-66038

USERNAME: Jennford 12/23/2020 4:09 PM
FILENAME: K:\Active Projects\MP-40174005\Lower Calera Creek Project\SHEETS\X-03.dwg

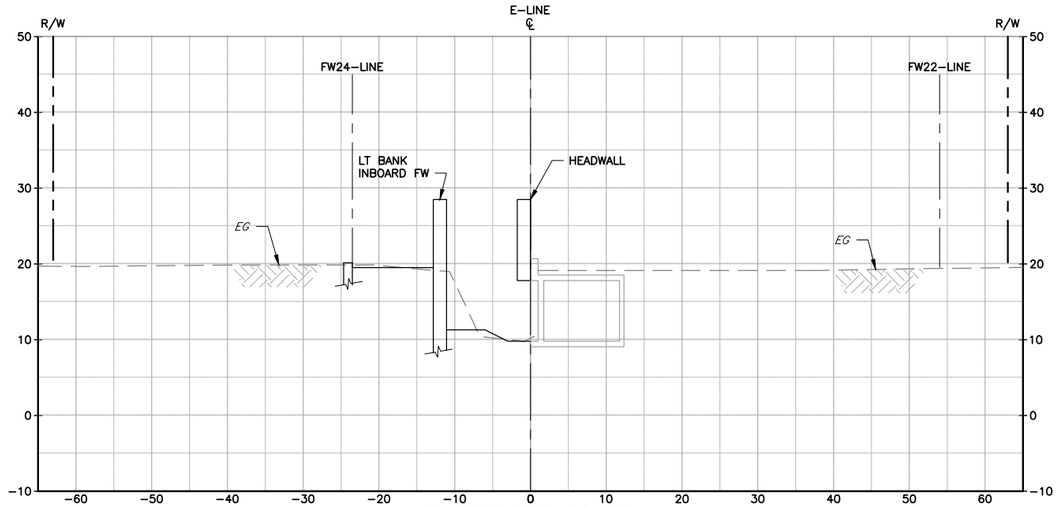

E-LINE STA 19+20

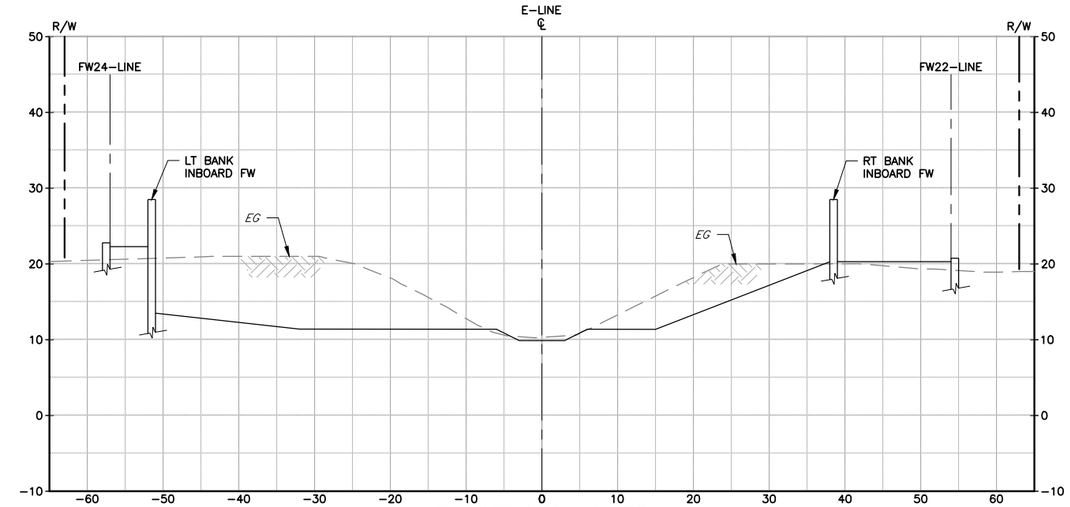

E-LINE STA 19+88

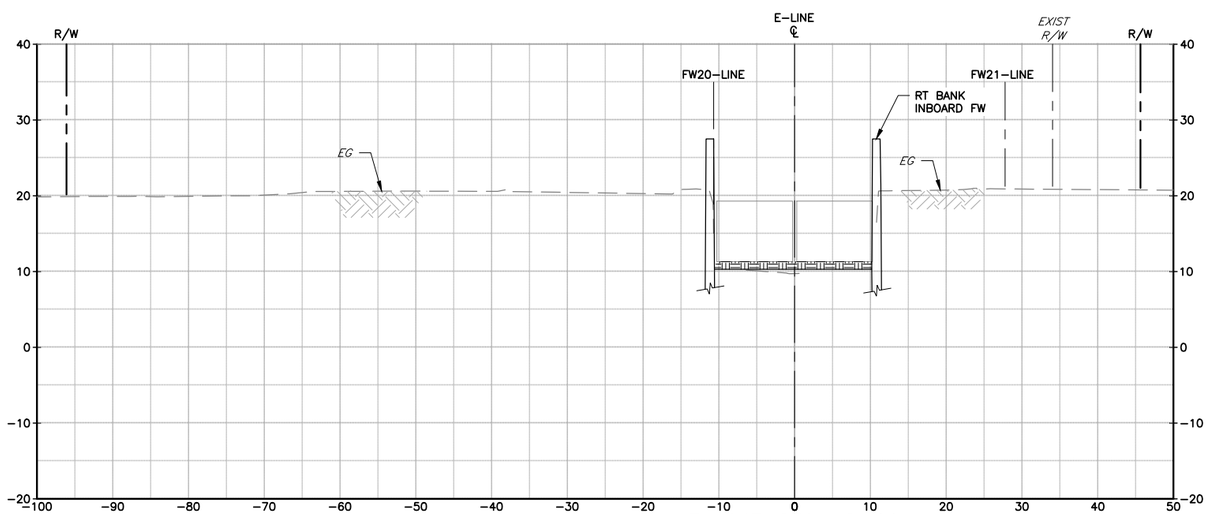

E-LINE STA 18+00

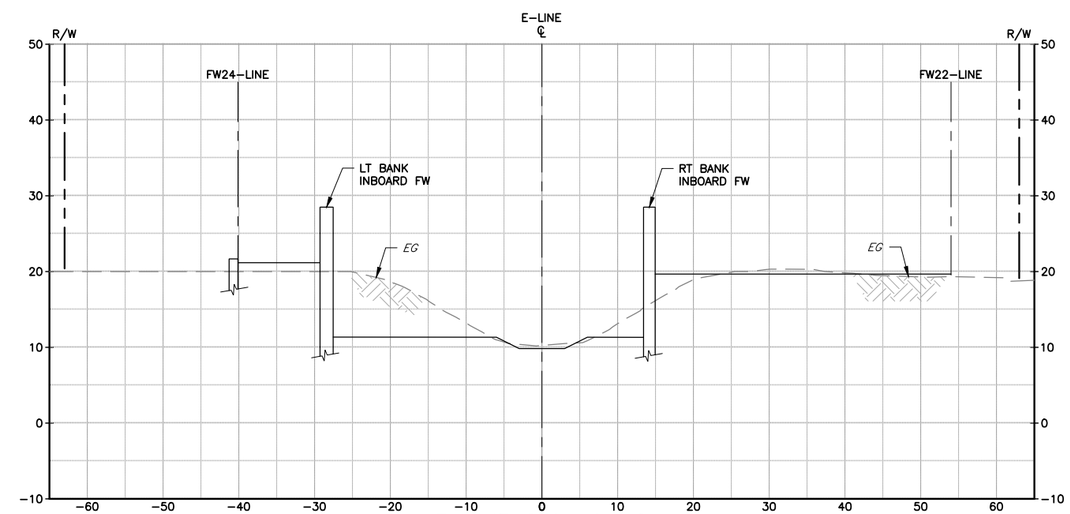

E-LINE STA 19+48

SECTIONS

SCALE: 1" = 10'

REV	DESCRIPTION	DATE	APPR

REFERENCE INFORMATION AND NOTES

1. CROSS SECTIONS ARE VIEWED LOOKING UPSTREAM.

DATE 12/30/2020
DESIGN Y. LEE
DRAWN J. FORD
CHECKED Y. LEE

ENGINEERING CERTIFICATION

REGISTERED PROFESSIONAL ENGINEER YOUHAN LEE No. C42456 CIVIL STATE OF CALIFORNIA

PROJECT ENGINEER 12.30.2020 DATE

SANTA CLARA VALLEY WATER DISTRICT

Valley Water

PROJECT NAME AND SHEET DESCRIPTION:

LOWER CALERA CREEK FLOOD PROTECTION PROJECT

CROSS SECTIONS

SCALE: AS SHOWN

VERIFY SCALES: 0 1"

IF NOT ONE INCH ON ORIGINAL DRAWING, ADJUST SCALES ACCORDINGLY

PROJECT NUMBER: 40174005

SHEET CODE: X-04

SHEET NUMBER: 134 OF 144

USERNAME: Jennford 12/23/2020 4:09 PM
FILENAME: K:\Active Projects\MP-40174005\Lower Calera Creek Project\SHEETS\X-04.dwg

DOCUMENT NUMBER: CAE_CY-X-4018-66039

Attachment 4
Page 134 of 144

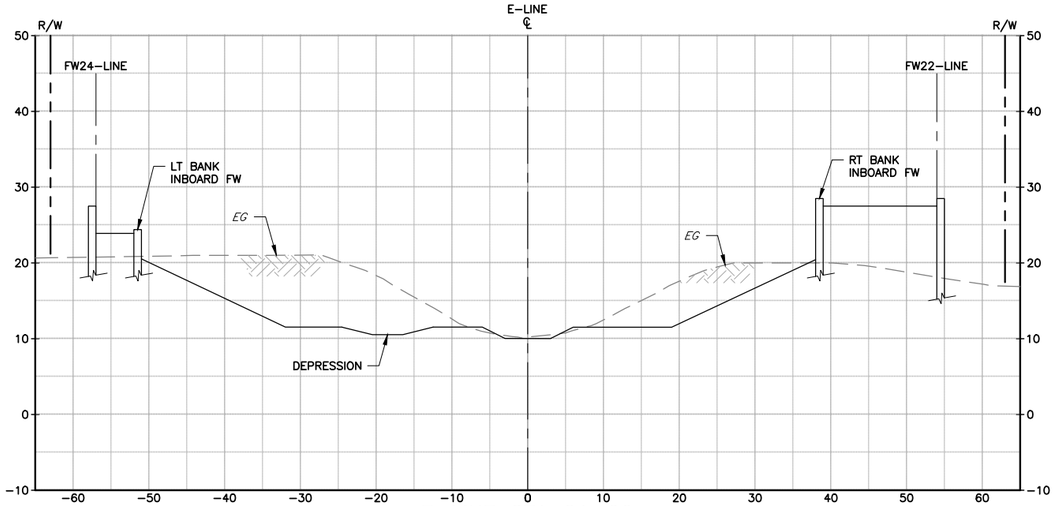

E-LINE STA 21+00

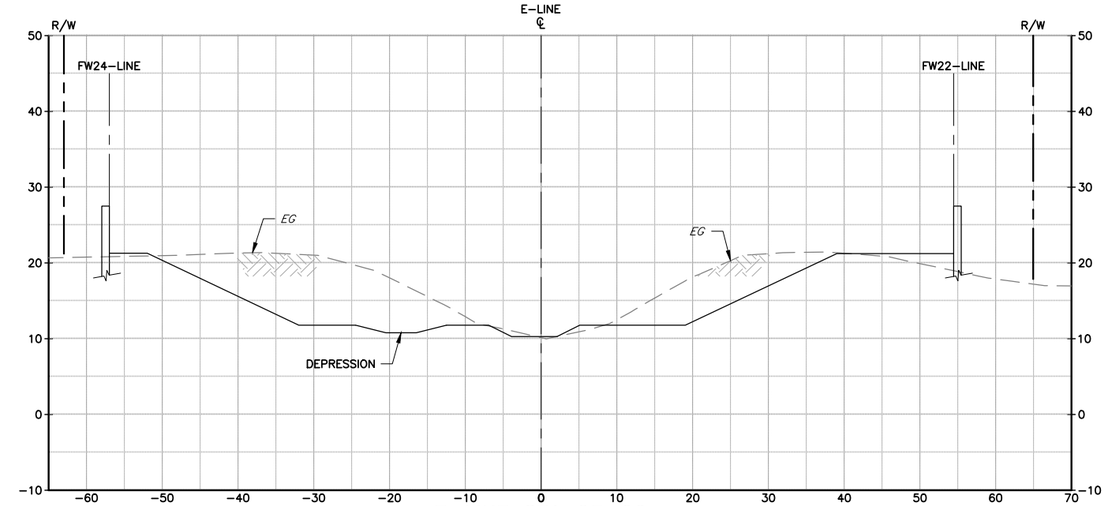

E-LINE STA 23+00

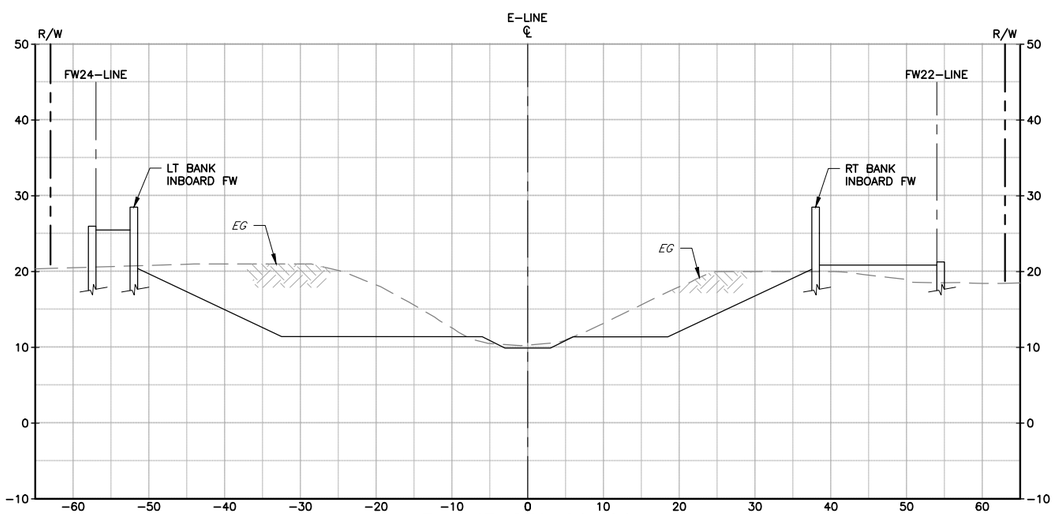

E-LINE STA 20+00

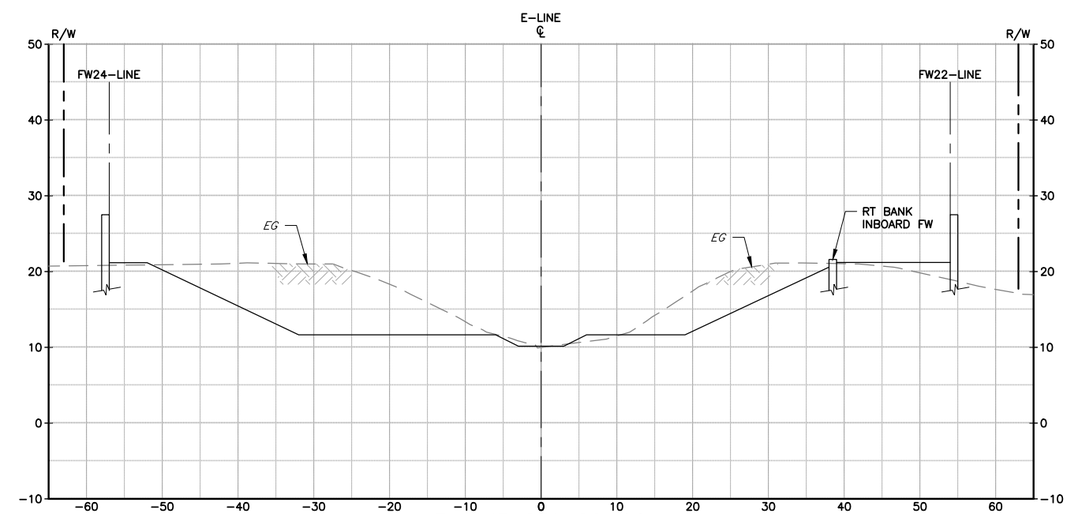

E-LINE STA 22+00

SECTIONS

SCALE: 1" = 10'

REV	DESCRIPTION	DATE	APPR

REFERENCE INFORMATION AND NOTES

1. CROSS SECTIONS ARE VIEWED LOOKING UPSTREAM.

DATE 12/30/2020
DESIGN Y. LEE
DRAWN J. FORD
CHECKED Y. LEE

ENGINEERING CERTIFICATION

REGISTERED PROFESSIONAL ENGINEER YOUHAN LEE No. C42456 CIVIL STATE OF CALIFORNIA

PROJECT ENGINEER 12.30.2020 DATE

SANTA CLARA VALLEY WATER DISTRICT

Valley Water

PROJECT NAME AND SHEET DESCRIPTION:

LOWER CALERA CREEK FLOOD PROTECTION PROJECT

CROSS SECTIONS

SCALE: AS SHOWN

VERIFY SCALES: 0 1"

IF THIS LINE 1 INCH ON ORIGINAL DRAWING IS NOT 1 INCH ON THIS SHEET, ADJUST SCALES ACCORDINGLY

PROJECT NUMBER: 40174005

SHEET CODE: X-05

SHEET NUMBER: 135 OF 144

DOCUMENT NUMBER: CAE_CY-X-4018-66040

USERNAME: Jennford 12/23/2020 4:09 PM
FILENAME: K:\Active Projects\MP-40174005\Lower Calera Creek Project\SHEETS\X-05.dwg

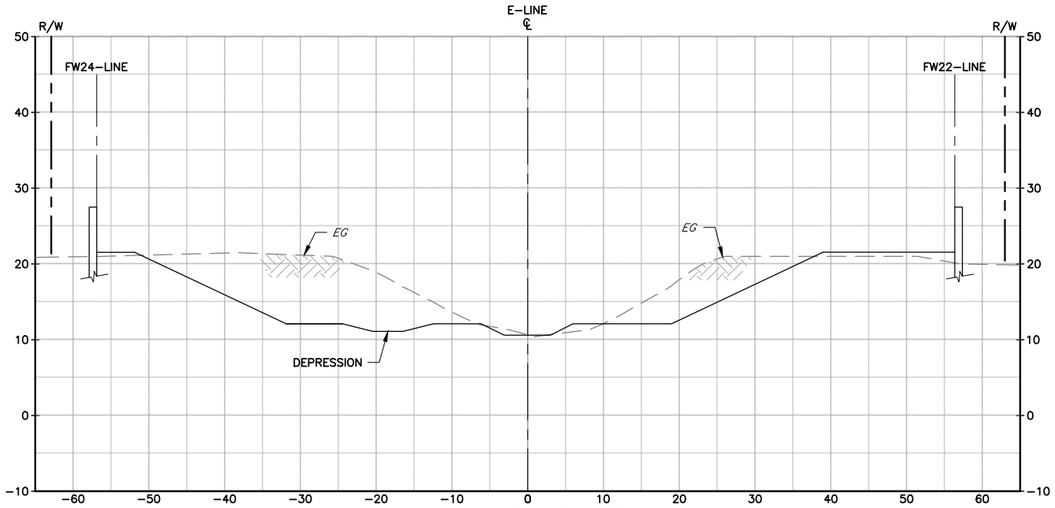

E-LINE STA 25+00

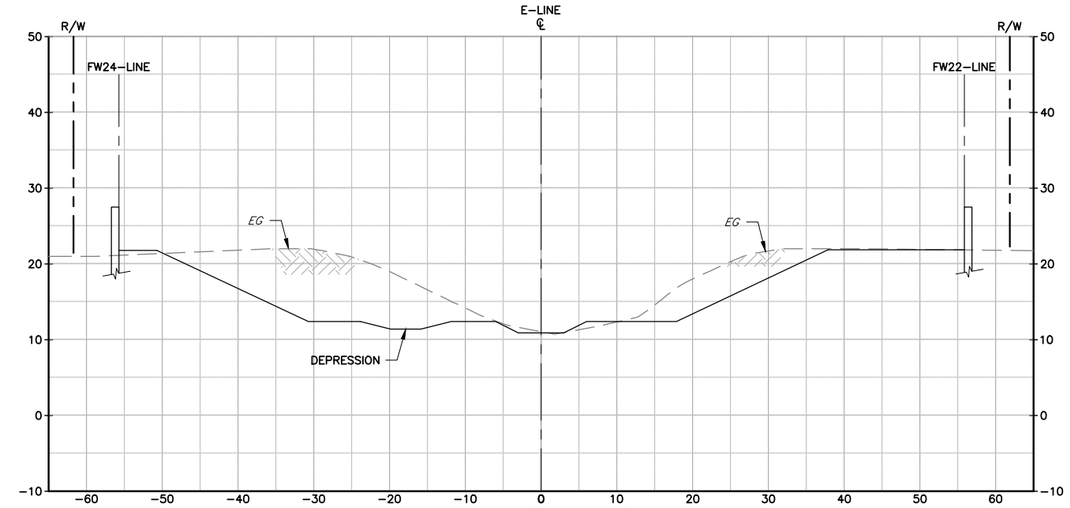

E-LINE STA 27+00

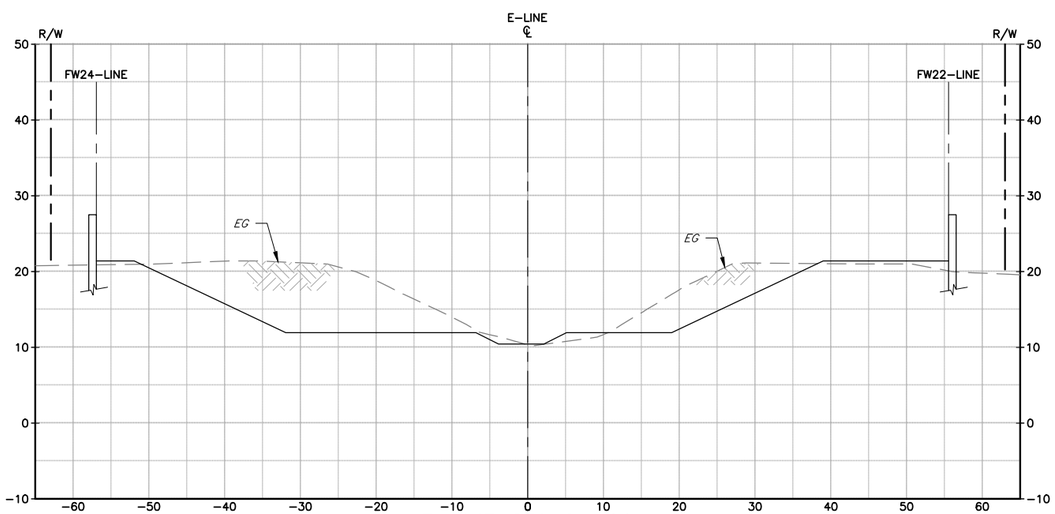

E-LINE STA 24+00

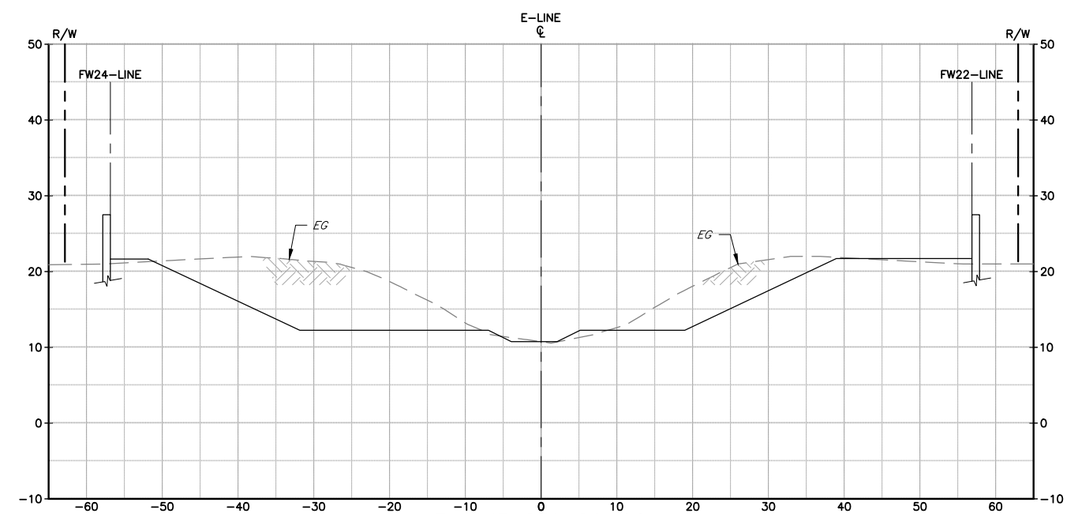

E-LINE STA 26+00

SECTIONS

SCALE: 1" = 10'

REV	DESCRIPTION	DATE	APPR

REFERENCE INFORMATION AND NOTES

1. CROSS SECTIONS ARE VIEWED LOOKING UPSTREAM.

DATE 12/30/2020

DESIGN Y. LEE

DRAWN J. FORD

CHECKED Y. LEE

ENGINEERING CERTIFICATION

REGISTERED PROFESSIONAL ENGINEER YOUHAN LEE No. C42456 CIVIL STATE OF CALIFORNIA

PROJECT ENGINEER 12.30.2020 DATE

SANTA CLARA VALLEY WATER DISTRICT

Valley Water

PROJECT NAME AND SHEET DESCRIPTION:

LOWER CALERA CREEK
FLOOD PROTECTION PROJECT

CROSS SECTIONS

SCALE: AS SHOWN

VERIFY SCALES: 0 1"

IF NOT ONE INCH ON ORIGINAL DRAWING, ADJUST SCALES ACCORDINGLY

PROJECT NUMBER: 40174005

SHEET CODE: X-06

SHEET NUMBER: 136 OF 144

USERNAME: Jennford 12/23/2020 4:09 PM
FILENAME: K:\Active Projects\MP-40174005\Lower Calera Creek Project\SHEETS\X-06.dwg

DOCUMENT NUMBER: CAE_CY-X-4018-66041

Attachment 4
Page 136 of 144

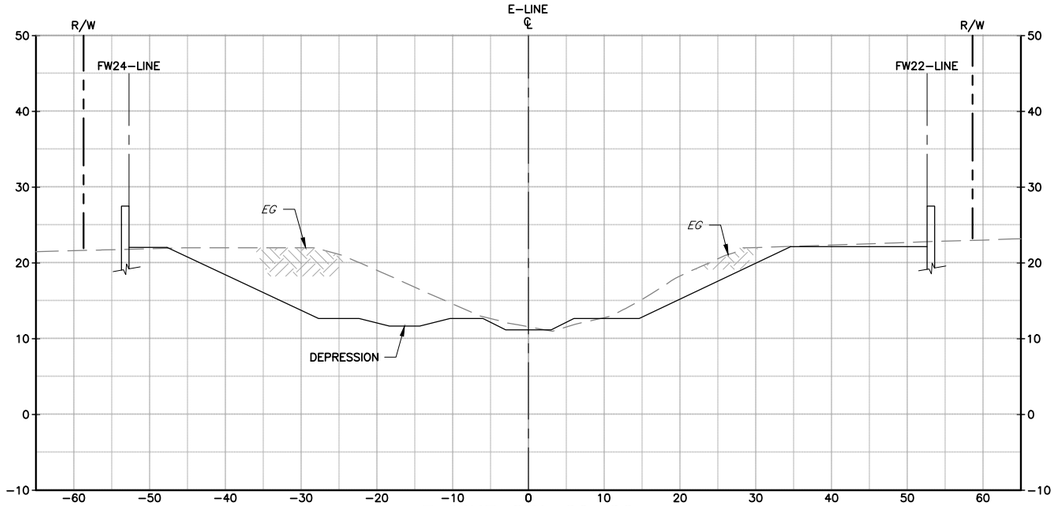

E-LINE STA 29+00

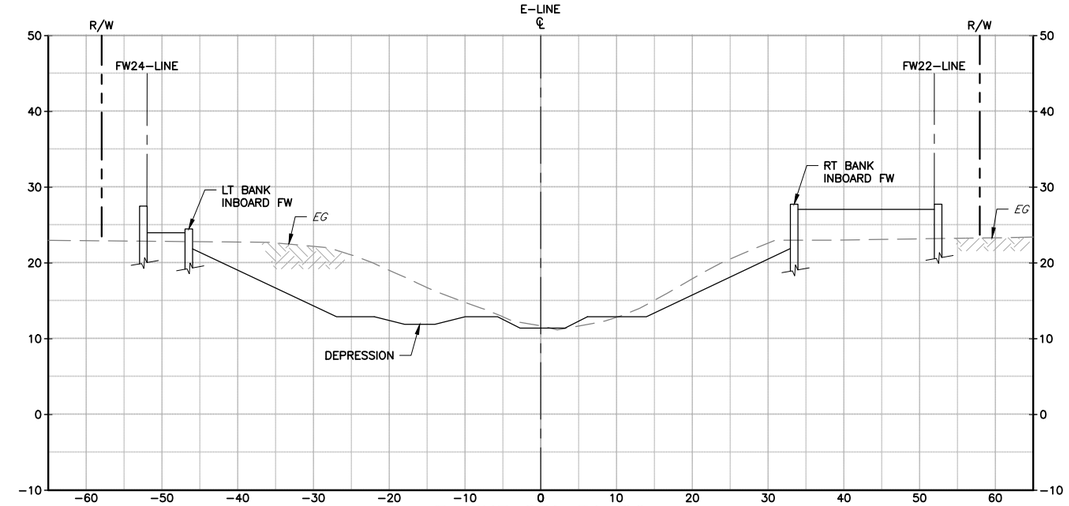

E-LINE STA 31+00

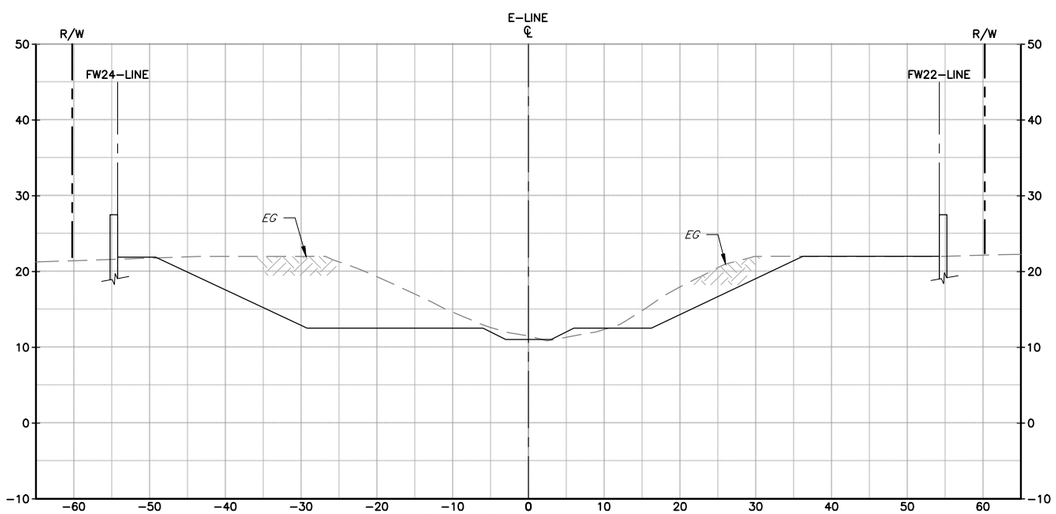

E-LINE STA 28+00

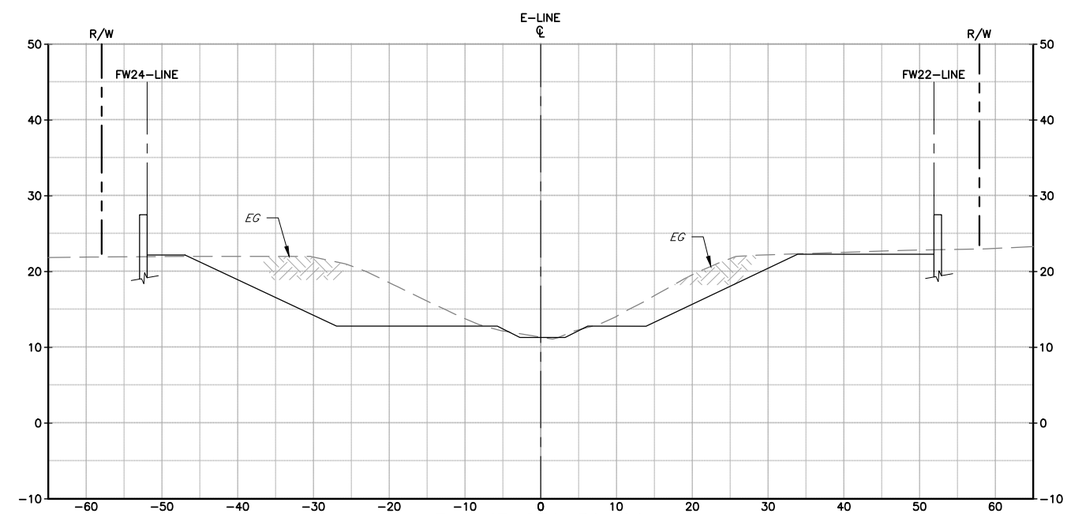

E-LINE STA 30+00

SECTIONS

SCALE: 1" = 10'

REV	DESCRIPTION	DATE	APPR

REFERENCE INFORMATION AND NOTES

1. CROSS SECTIONS ARE VIEWED LOOKING UPSTREAM.

DATE 12/30/2020

DESIGN Y. LEE

DRAWN J. FORD

CHECKED Y. LEE

ENGINEERING CERTIFICATION

REGISTERED PROFESSIONAL ENGINEER YOUHAN LEE No. C42456 CIVIL STATE OF CALIFORNIA

PROJECT ENGINEER 12.30.2020 DATE

SANTA CLARA VALLEY WATER DISTRICT

Valley Water

PROJECT NAME AND SHEET DESCRIPTION:

LOWER CALERA CREEK FLOOD PROTECTION PROJECT

CROSS SECTIONS

SCALE: AS SHOWN

VERIFY SCALES: 0 1"

IF NOT 1" INCH ON ORIGINAL DRAWING, ADJUST SCALES ACCORDINGLY

PROJECT NUMBER: 40174005

SHEET CODE: X-07

SHEET NUMBER: 137 OF 144

USERNAME: Jennford 12/23/2020 4:09 PM
FILENAME: K:\Active Projects\MP-40174005\Lower Calera Creek Project\SHEETS\X-07.dwg

DOCUMENT NUMBER: CAE_CY-X-4018-66042

Attachment 4
Page 137 of 144

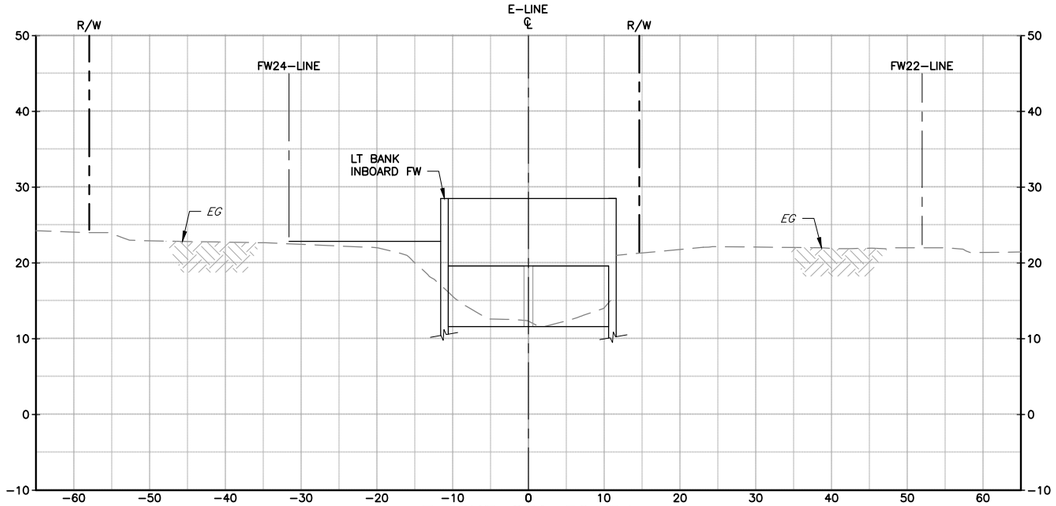

E-LINE STA 32+54

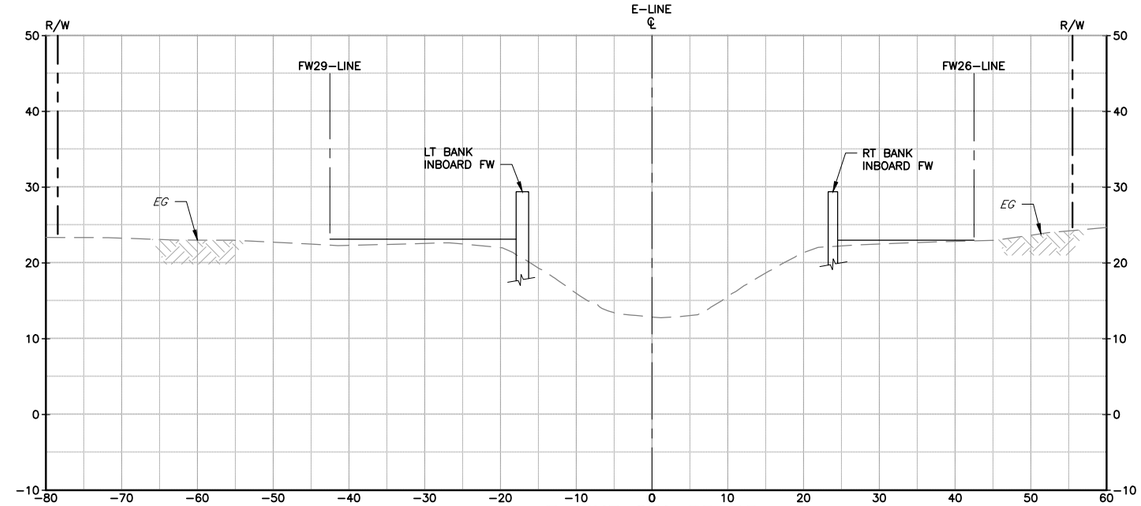

E-LINE STA 33+45

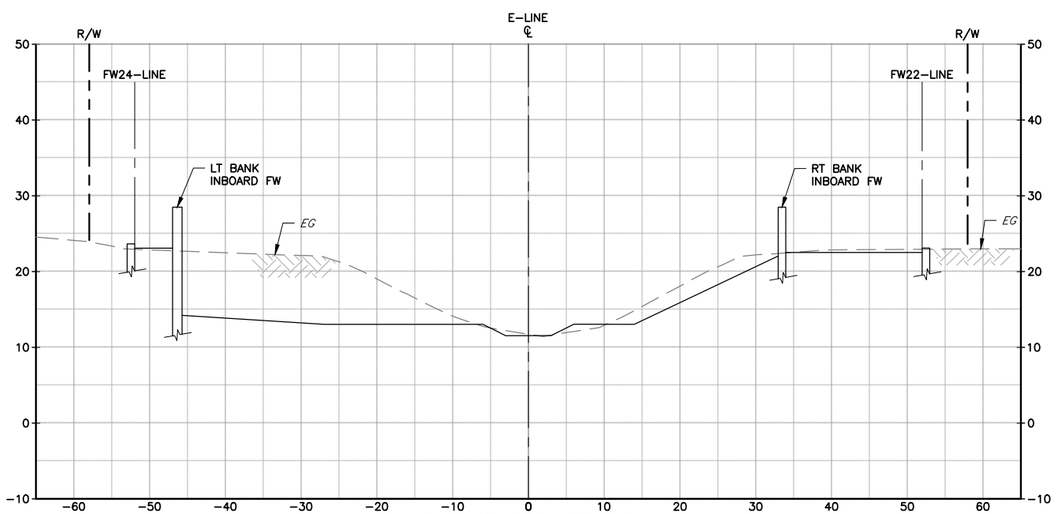

E-LINE STA 32+09

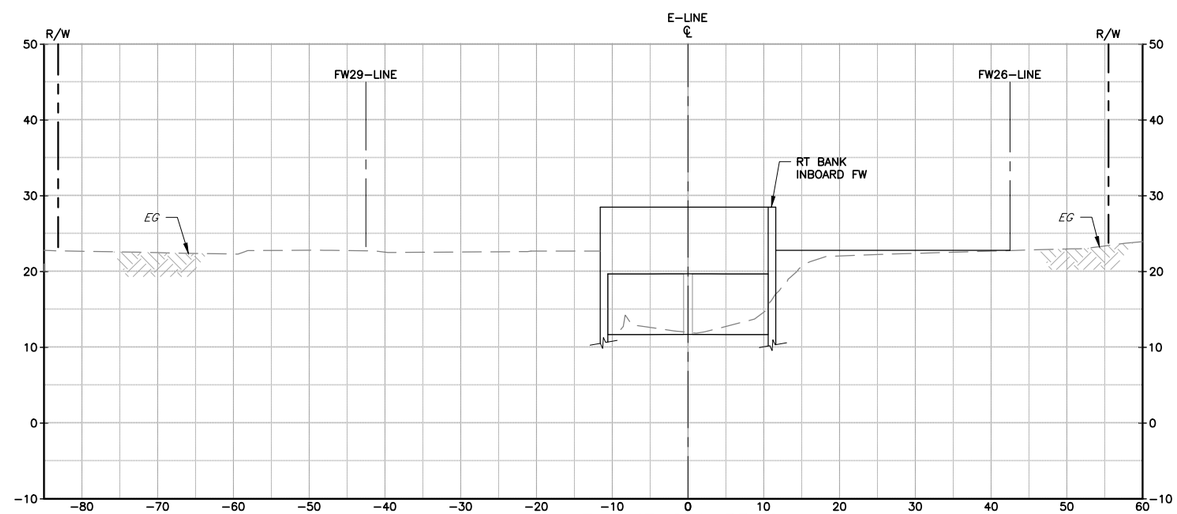

E-LINE STA 33+24

SECTIONS

SCALE: 1" = 10'

REV	DESCRIPTION	DATE	APPR

REFERENCE INFORMATION AND NOTES

1. CROSS SECTIONS ARE VIEWED LOOKING UPSTREAM.

DATE 12/30/2020
DESIGN Y. LEE
DRAWN J. FORD
CHECKED Y. LEE

ENGINEERING CERTIFICATION

REGISTERED PROFESSIONAL ENGINEER YOUHAN LEE No. C42456 CIVIL STATE OF CALIFORNIA

PROJECT ENGINEER — DATE 12.30.2020

SANTA CLARA VALLEY WATER DISTRICT

Valley Water

PROJECT NAME AND SHEET DESCRIPTION:

LOWER CALERA CREEK FLOOD PROTECTION PROJECT

CROSS SECTIONS

SCALE: AS SHOWN

VERIFY SCALES: 0 — 1"

IF NOT ONE INCH ON ORIGINAL DRAWING, ADJUST SCALES ACCORDINGLY

PROJECT NUMBER: 40174005

SHEET CODE: X-08

SHEET NUMBER: 138 OF 144

USERNAME: Jennford 12/23/2020 4:09 PM
FILENAME: K:\Active Projects\MP-40174005\Lower Calera Creek Project\SHEETS\X-08.dwg

DOCUMENT NUMBER: CAE_CY-X-4018-66043

Attachment 4
Page 138 of 144

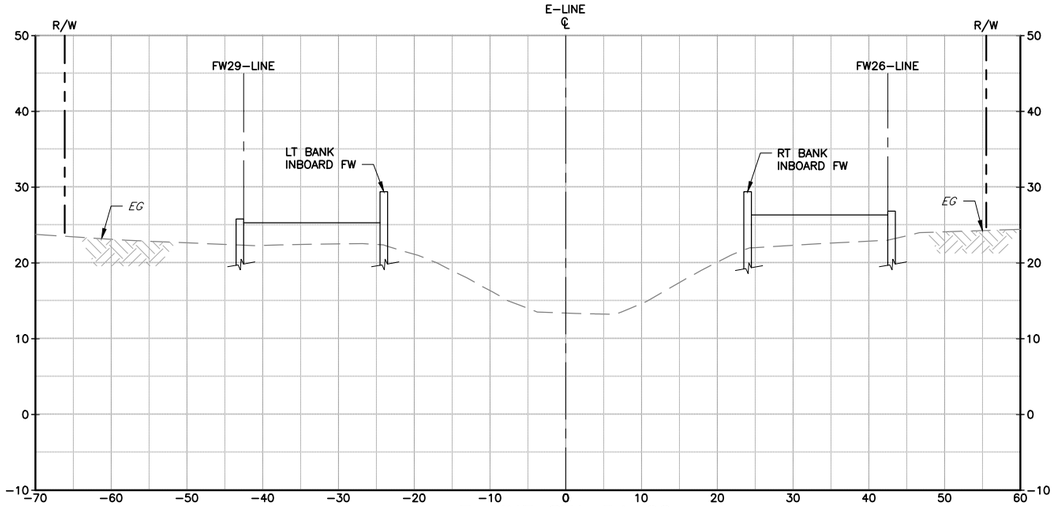

E-LINE STA 34+00

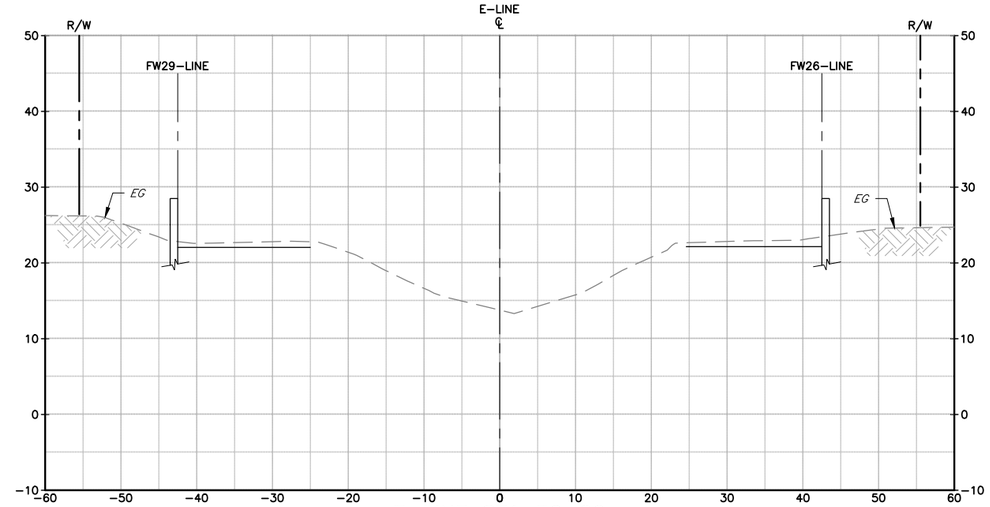

E-LINE STA 36+00

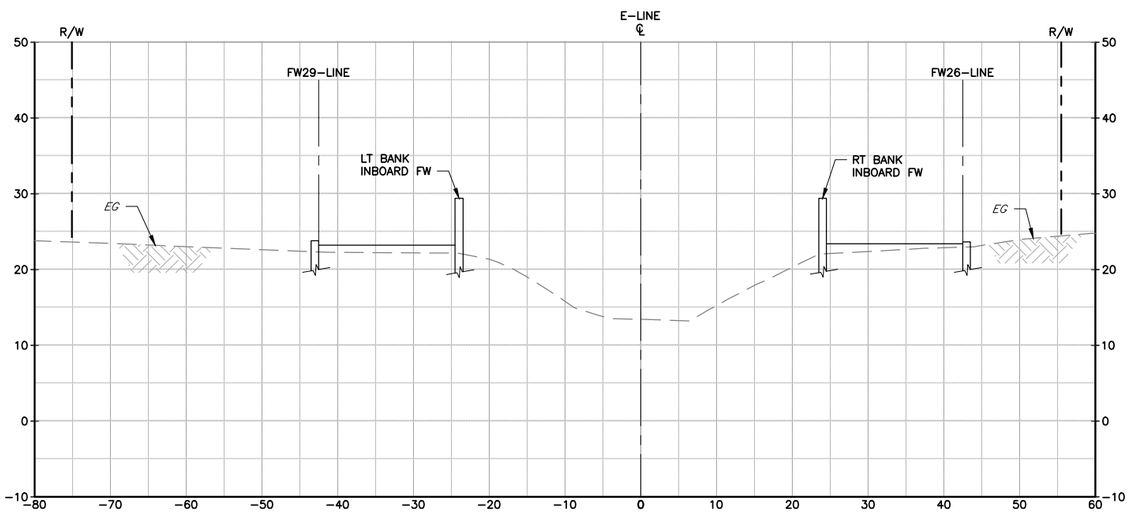

E-LINE STA 33+60

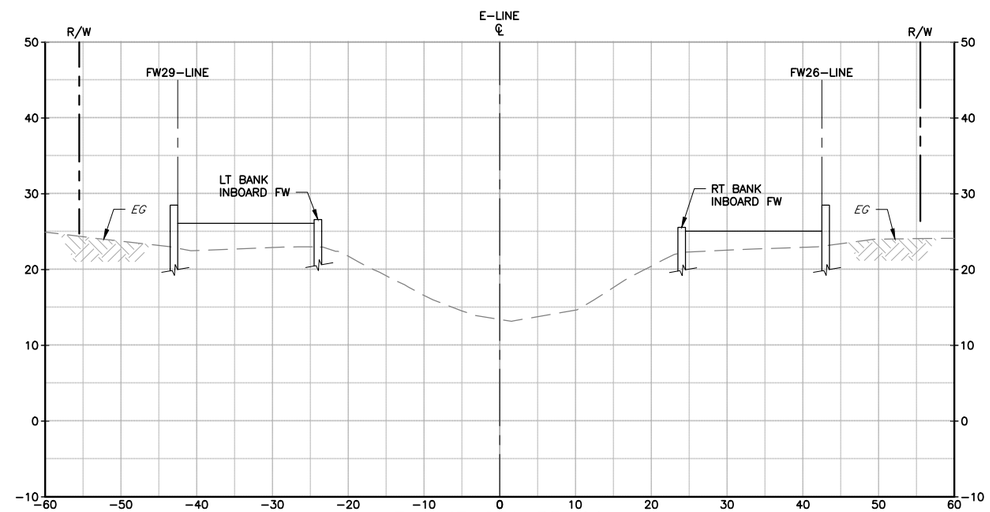

E-LINE STA 35+00

SECTIONS

SCALE: 1" = 10'

REV	DESCRIPTION	DATE	APPR

REFERENCE INFORMATION AND NOTES

1. CROSS SECTIONS ARE VIEWED LOOKING UPSTREAM.

DATE 12/30/2020
DESIGN Y. LEE
DRAWN J. FORD
CHECKED Y. LEE

ENGINEERING CERTIFICATION

REGISTERED PROFESSIONAL ENGINEER YOUHAN LEE No. C42456 CIVIL STATE OF CALIFORNIA

PROJECT ENGINEER 12.30.2020 DATE

SANTA CLARA VALLEY WATER DISTRICT

Valley Water

PROJECT NAME AND SHEET DESCRIPTION:

LOWER CALERA CREEK FLOOD PROTECTION PROJECT

CROSS SECTIONS

SCALE: AS SHOWN

VERIFY SCALES: 0 1"

IF NOT ONE INCH ON ORIGINAL DRAWING, ADJUST SCALES ACCORDINGLY

PROJECT NUMBER: 40174005

SHEET CODE: X-09

SHEET NUMBER: 139 OF 144

USERNAME: Jennford 12/23/2020 4:10 PM
FILENAME: K:\Active Projects\MP-40174005\Lower Calera Creek Project\SHEETS\X-09.dwg

DOCUMENT NUMBER: CAE_CY-X-4018-66044

Attachment 4
Page 139 of 144

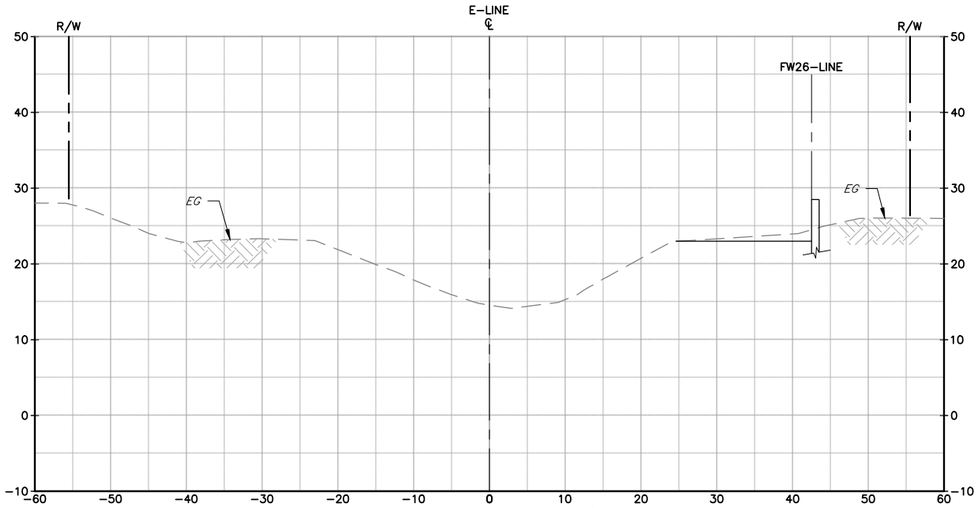

E-LINE STA 38+00

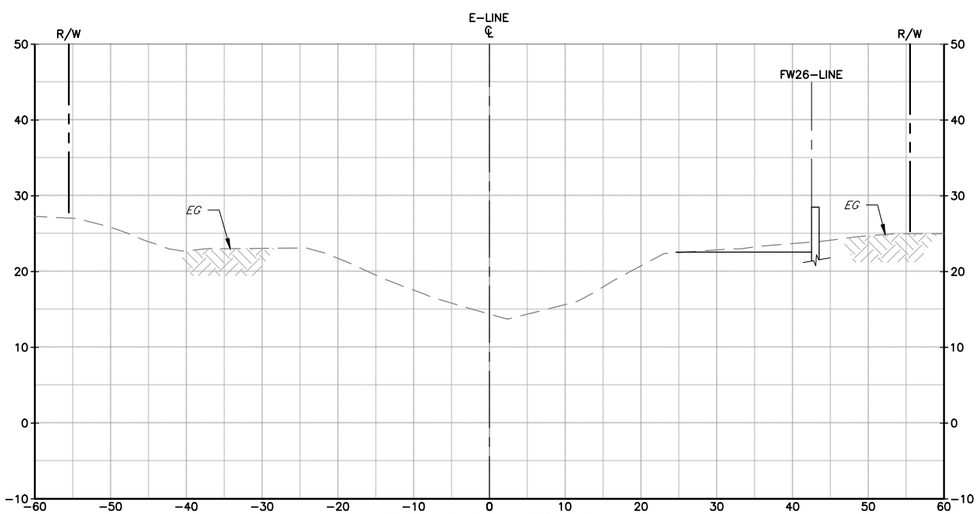

E-LINE STA 37+00

SECTIONS

SCALE: 1" = 10'

REV	DESCRIPTION	DATE	APPR

REFERENCE INFORMATION AND NOTES

1. CROSS SECTIONS ARE VIEWED LOOKING UPSTREAM.

DATE 12/30/2020

DESIGN Y. LEE

DRAWN J. FORD

CHECKED Y. LEE

ENGINEERING CERTIFICATION

REGISTERED PROFESSIONAL ENGINEER YOUHAN LEE No. C42456 CIVIL STATE OF CALIFORNIA

PROJECT ENGINEER 12.30.2020 DATE

SANTA CLARA VALLEY WATER DISTRICT

Valley Water

PROJECT NAME AND SHEET DESCRIPTION:

LOWER CALERA CREEK
FLOOD PROTECTION PROJECT

CROSS SECTIONS

SCALE: AS SHOWN

VERIFY SCALES: 0 1"
IF NOT ONE INCH ON ORIGINAL DRAWING IF NOT ONE INCH ON THIS SHEET, ADJUST SCALES ACCORDINGLY

PROJECT NUMBER: 40174005

SHEET CODE: X-10

SHEET NUMBER: 140 OF 144

USERNAME: Jennford 12/23/2020 4:10 PM
FILENAME: K:\Active Projects\MP-40174005\Lower Calera Creek Project\SHEETS\X-10.dwg

DOCUMENT NUMBER: CAE_CY-X-4018-66045

Attachment 4
Page 140 of 144

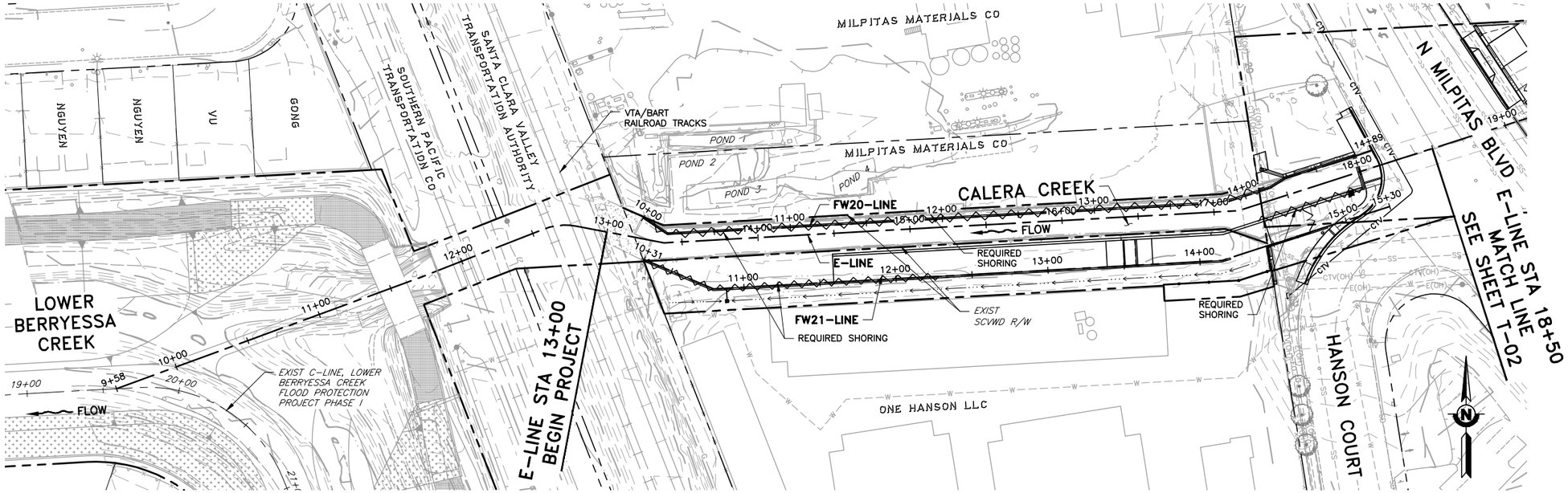

PLAN

SCALE: 1" = 40'

USERNAME: Jennford 12/24/2020 2:09 PM
FILENAME: K:\Active Projects\MP-40174005\Lower Calera Creek Project\SHEETS\T-01.dwg

DOCUMENT NUMBER: CAE_CY-T-4018-66046

REV	DESCRIPTION	DATE	APPR

Attachment 4
Page 141 of 144

REFERENCE INFORMATION AND NOTES

1. SEE SPECIFICATIONS FOR THE REQUIREMENTS OF TEMPORARY SHORING.

DATE 12/30/2020
DESIGN Y. LEE
DRAWN R. STILL
CHECKED Y. LEE

ENGINEERING CERTIFICATION

REGISTERED PROFESSIONAL ENGINEER YOUHAN LEE No. C42456 CIVIL STATE OF CALIFORNIA

12.30.2020
PROJECT ENGINEER DATE

SANTA CLARA VALLEY WATER DISTRICT

Valley Water

PROJECT NAME AND SHEET DESCRIPTION:

LOWER CALERA CREEK FLOOD PROTECTION PROJECT

TEMPORARY SHORING WORK
E-LINE STA 13+00 TO 18+50

Attachment 4
Page 141 of 144

SCALE: AS SHOWN

VERIFY SCALES: 0 1"
BAR IS 1 INCH ON ORIGINAL DRAWING
IF NOT ONE INCH ON THIS SHEET, ADJUST SCALES ACCORDINGLY

PROJECT NUMBER: 40174005

SHEET CODE: T-01

SHEET NUMBER: 141 OF 144

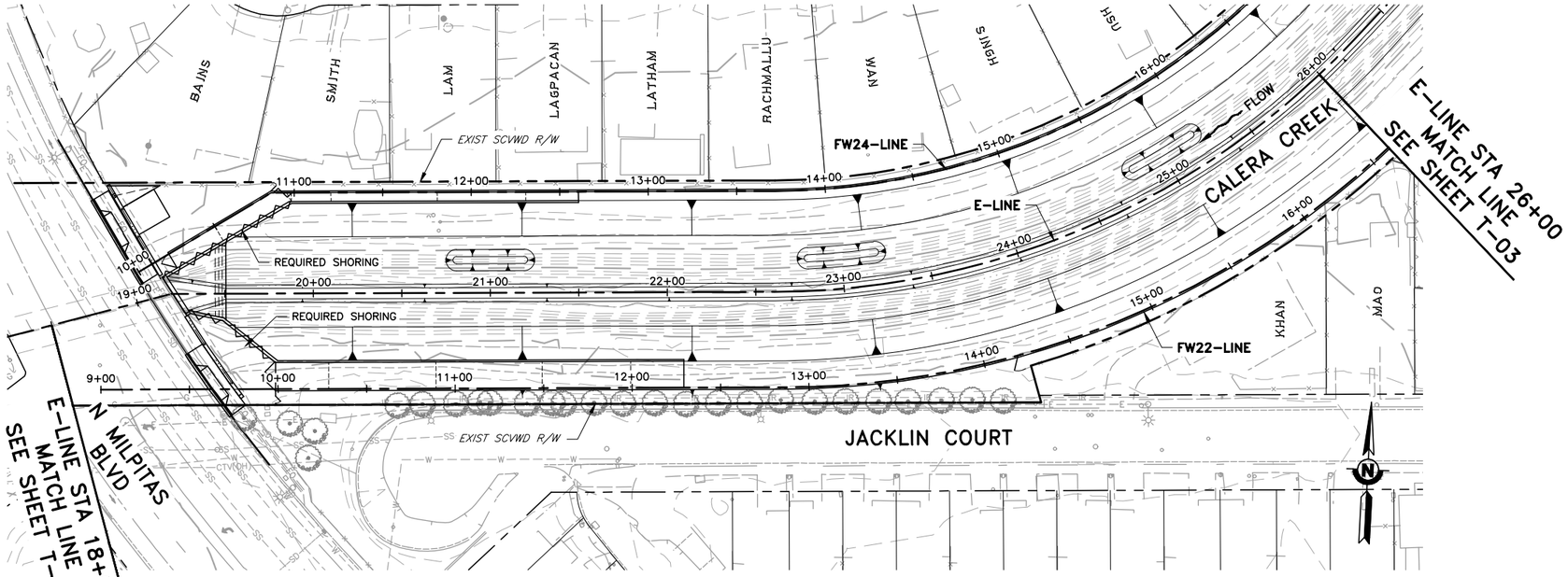

PLAN

SCALE: 1" = 40'

USERNAME: Jennford 12/24/2020 2:17 PM
FILENAME: K:\Active Projects\MP-40174005\Lower Calera Creek Project\SHEETS\T-02.dwg

DOCUMENT NUMBER: CAE_CY-T-4018-66047

REV	DESCRIPTION	DATE	APPR

Attachment 4
Page 142 of 144

REFERENCE INFORMATION AND NOTES

1. SEE SPECIFICATIONS FOR THE REQUIREMENTS OF TEMPORARY SHORING.

DATE	ENGINEERING CERTIFICATION
12/30/2020	REGISTERED PROFESSIONAL ENGINEER YOUHAN LEE No. C42456 CIVIL STATE OF CALIFORNIA
DESIGN Y. LEE	
DRAWN R. STILL	
CHECKED Y. LEE	12.30.2020 PROJECT ENGINEER DATE

SANTA CLARA VALLEY WATER DISTRICT

Valley Water

PROJECT NAME AND SHEET DESCRIPTION:

LOWER CALERA CREEK
FLOOD PROTECTION PROJECT

TEMPORARY SHORING WORK
E-LINE STA 18+50 TO 26+00

Attachment 4
Page 142 of 144

SCALE	PROJECT NUMBER
AS SHOWN	40174005
VERIFY SCALES 0 1" BAR IS ONE INCH ON ORIGINAL DRAWING IF NOT ONE INCH ON THIS SHEET, ADJUST SCALES ACCORDINGLY	SHEET CODE: T-02
	SHEET NUMBER: 142 OF 144

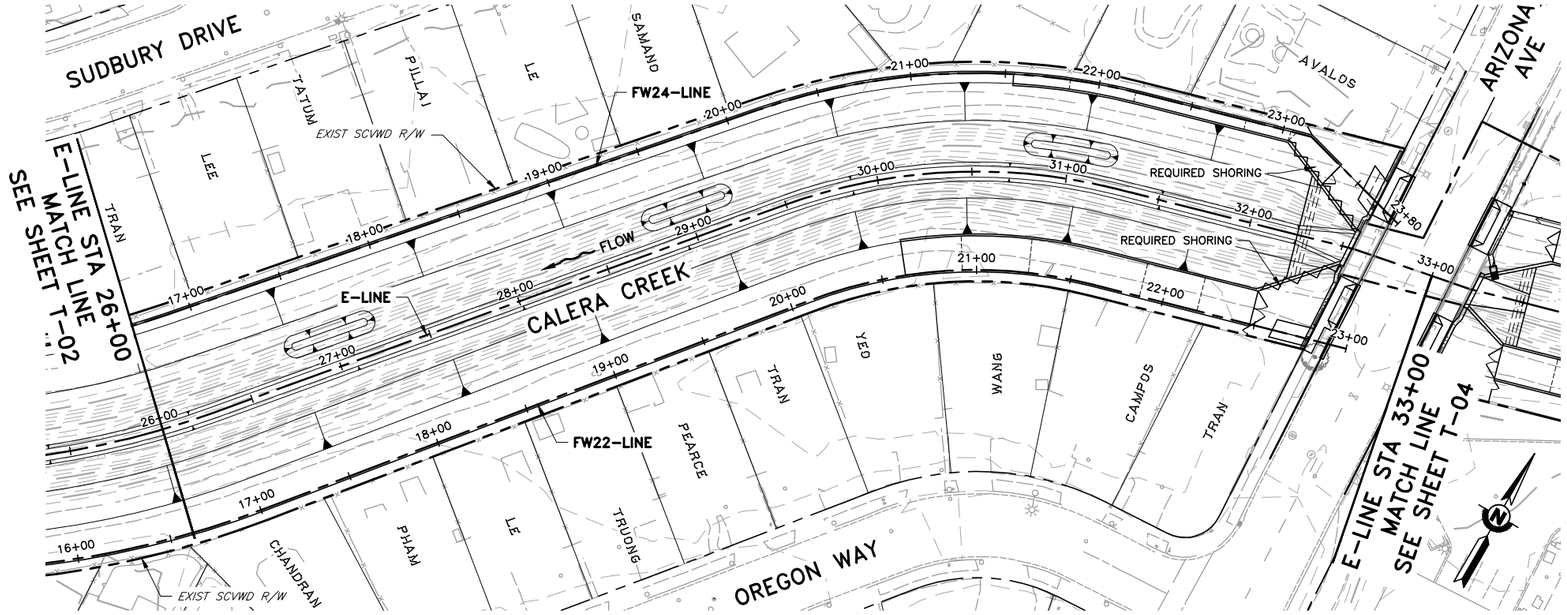

PLAN

SCALE: 1" = 40'

USERNAME: Jennford 12/24/2020 2:25 PM
FILENAME: K:\Active Projects\MP-40174005\Lower Calera Creek Project\SHEETS\T-03.dwg

DOCUMENT NUMBER: CAE_CY-T-4018-66048

REV	DESCRIPTION	DATE	APPR

Attachment 4
Page 143 of 144

REFERENCE INFORMATION AND NOTES

1. SEE SPECIFICATIONS FOR THE REQUIREMENTS OF TEMPORARY SHORING.

DATE
12/30/2020
DESIGN
Y. LEE
DRAWN
R. STILL
CHECKED
Y. LEE

ENGINEERING CERTIFICATION

REGISTERED PROFESSIONAL ENGINEER YOUHAN LEE No. C42456 CIVIL STATE OF CALIFORNIA

12.30.2020

PROJECT ENGINEER DATE

SANTA CLARA VALLEY WATER DISTRICT

Valley Water

PROJECT NAME AND SHEET DESCRIPTION:

LOWER CALERA CREEK
FLOOD PROTECTION PROJECT

TEMPORARY SHORING WORK
E-LINE STA 26+00 TO 33+00

Attachment 4
Page 143 of 144

SCALE	PROJECT NUMBER
AS SHOWN	40174005
VERIFY SCALES 0 1" BAR IS ONE INCH ON ORIGINAL DRAWING IF NOT ONE INCH ON THIS SHEET, ADJUST SCALES ACCORDINGLY	SHEET CODE: T-03
	SHEET NUMBER: 143 OF 144

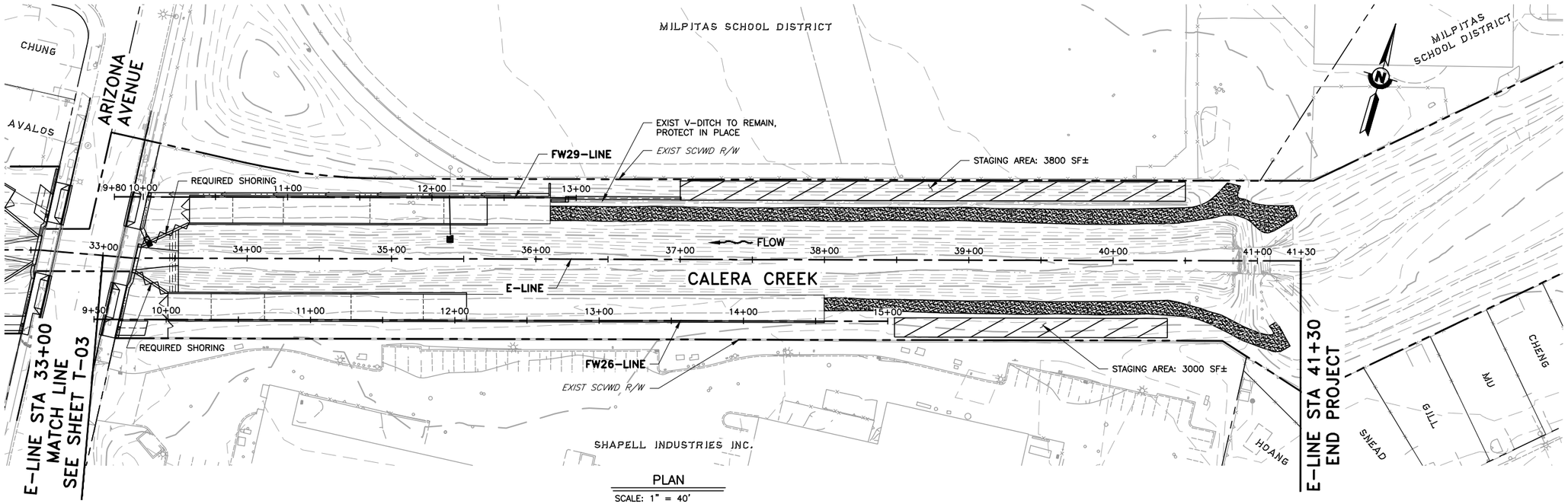

PLAN
SCALE: 1" = 40'

USERNAME: Jennford 12/24/2020 2:35 PM
FILENAME: K:\Active Projects\MP-40174005\Lower Calera Creek Project\SHEETS\T-04.dwg

DOCUMENT NUMBER: CAE_CY-T-4018-66049

REV	DESCRIPTION	DATE	APPR
	Attachment 4 Page 144 of 144		

REFERENCE INFORMATION AND NOTES

1. SEE SPECIFICATIONS FOR THE REQUIREMENTS OF TEMPORARY SHORING.

DATE 12/30/2020
DESIGN Y. LEE
DRAWN R. STILL
CHECKED Y. LEE

ENGINEERING CERTIFICATION
REGISTERED PROFESSIONAL ENGINEER YOUHAN LEE No. C42456 CIVIL STATE OF CALIFORNIA
12.30.2020
PROJECT ENGINEER DATE

SANTA CLARA VALLEY WATER DISTRICT
Valley Water

PROJECT NAME AND SHEET DESCRIPTION:
LOWER CALERA CREEK FLOOD PROTECTION PROJECT
TEMPORARY SHORING WORK
E-LINE STA 33+00 TO 41+30

SCALE AS SHOWN
VERIFY SCALES 0 1"
BAR IS ONE INCH ON ORIGINAL DRAWING IF NOT ONE INCH ON THIS SHEET, ADJUST SCALES ACCORDINGLY

PROJECT NUMBER 40174005
SHEET CODE: T-04
SHEET NUMBER: 144 OF 144

Attachment 4
Page 144 of 144

SPECIFICATIONS AND CONTRACT DOCUMENTS

FOR THE
CONSTRUCTION OF

LOWER CALERA CREEK FLOOD PROTECTION PROJECT

Project No. 40174005
Contract No. C0666

JANUARY 2021

Valley Water
Clean Water • Healthy Environment • Flood Protection

THIS PAGE INTENTIONALLY LEFT BLANK

DocuSign Envelope ID: 9F41CF40-5798-4D94-8839-11AE42F7C261

SPECIFICATIONS AND CONTRACT DOCUMENTS

FOR THE

CONSTRUCTION OF

LOWER CALERA CREEK FLOOD PROTECTION PROJECT

PROJECT NO. 40174005

CONTRACT NO. C0666

SANTA CLARA VALLEY WATER DISTRICT

Prepared by:

DocuSigned by:
Youhan Lee
9BE1E215B8AF4D8...

12/16/2020

Youhan Lee, P.E.
Associate Engineer - Civil
Design and Construction Unit No. 2

Date

Approved by:

DocuSigned by:
Karl Neuman
3A9A2A544F491...

12/16/2020

Karl Neuman, P.E.
Engineering Unit Manager
Design and Construction Unit No. 2

Date

Accepted by:

DocuSigned by:
Rechelle Blank
0F29B65C492A46F...

12/16/2020

Rechelle Blank, P.E.
Deputy Operating Officer
Watersheds Design and Construction

Date

JANUARY 2021

DISTRICT BOARD OF DIRECTORS

John L. Varela	**District 1**	**Nai Hsueh, Chair**	**District 5**
Barbara F. Keegan	**District 2**	**Tony Estremera, Vice Chair**	**District 6**
Richard P. Santos	**District 3**	**Gary Kremen**	**District 7**
Linda J. LeZotte, Chair	**District 4**		

S14199

THIS PAGE INTENTIONALLY LEFT BLANK

TOPSOIL HARVESTING AND WETLAND PLANTING

DocuSigned by:
Joseph Howard
F83FA0F1701D457...

12/16/2020

Joseph M. Howard
Landscape Architect
H.T. Harvey & Associates

Date

LANDSCAPE PLANTING AND IRRIGATION

DocuSigned by:
John Roberts
374B1B1984C4407...

12/20/2020

John N. Roberts
Landscape Architect
Stillwater Sciences

Date

FLOODWALL STRUCTURAL DESIGN

DocuSigned by:
Mike Bianucci
E40E85DCD60842B...

12/21/2020

Mike Bianucci, P.E.
Senior Project Manager
Mark Thomas

Date

FLOODWALL STRUCTURAL DESIGN

DocuSigned by:
Mahvash Harms
D9F9F34EF7CE427...

12/23/2020

Mahvash M. Harms, P.E.
Principal Engineer
Biggs Cardosa Associates Inc.

Date

THIS PAGE INTENTIONALLY LEFT BLANK

TABLE OF CONTENTS

Page

STANDARD PROVISIONS

SECTION 1. DEFINITIONS 1-1

SECTION 2. CONTRACT DOCUMENTS.....2-1

2.01. Contract Documents and Precedence 2-1
2.02. State Specifications and Plans 2-2
2.03. Clarification of Contract 2-2
2.04. Requests for Information 2-3
2.05. Examination of Drawings, Specifications, and Site of Work 2-4

SECTION 3. SCOPE OF WORK.....3-1

3.01. Work to be Done 3-1
3.02. Engineer.....3-1
3.03. Contractor Staffing 3-1
3.04. Character of Workers 3-3
3.05. Layout of Work and Surveys.....3-3
3.05.01 Responsibility of District 3-3
3.05.02. Responsibility of Contractor.....3-3
3.06. Changes in the Work.....3-4
3.06.01. Potential Change Orders and Change Orders 3-4
3.06.02. Change Order Request 3-5
3.06.03. Directed Change Orders.....3-6
3.06.04. Allowable Quantity Variations 3-7
3.07. Change in Contract Price(s) 3-9
3.07.01. General 3-9
3.07.02. Cost of Extra Work 3-11
3.07.03. Time-and-Materials Work 3-16
3.07.04. Special Services.....3-17
3.07.05. Compensation for Time Extensions 3-17
3.08. Change in Contract Time(s).....3-18
3.08.01. General 3-18
3.08.02. Inclement Weather 3-19
3.09. Differing Conditions 3-20
3.10. Cost Reduction Incentive.....3-21
3.11. Disputes 3-21
3.11.01. Protest 3-22
3.11.02. Notice of Potential Claims 3-22
3.12. Claims 3-23
3.12.01. Claims Less Than Fifty Thousand Dollars 3-24
3.12.02. Claims from Fifty Thousand Dollars to Three Hundred and Seventy-Five Thousand Dollars.....3-25
3.12.03. Informal Conferences 3-25
3.12.04. Civil Actions.....3-25
3.13. Dispute Review Board.....3-26

Page

3.13.01. General 3-26
3.13.02. DRB Qualifications 3-27
3.13.03. Establishment of the DRB 3-29
3.13.04. DRB Meetings 3-30
3.13.05. Dispute Resolution 3-30
3.14 Escrow Bid Documents 3-36
3.14.01. Introduction 3-36
3.14.02. Purpose 3-37
3.14.03. Format and Contents 3-37
3.14.04. Submittal 3-37
3.14.05. Storage 3-38
3.14.06. Examination 3-39
3.14.07. Final Deposition 3-39
3.15. Partnering 3-39
3.15.01. Partnering Relationship 3-39
3.15.02. Professionally Facilitated Project Partnering 3-40
3.16. Claims and Disputes per Public Contract Code Section 9204 3-40
3.17. Choice of Law and Venue 3-44

SECTION 4. LEGAL REGULATIONS AND RESPONSIBILITY 4-1

4.01. Laws to be Observed 4-1
4.02. Equal Opportunity Requirements 4-1
4.03. Employment of Labor 4-2
4.04. Prevailing Wages 4-2
4.05. Hours of Labor 4-4
4.06. Apprentices 4-4
4.07. Permits and Licenses 4-5
4.08. Patents and Copyrights 4-5
4.09. Interference With Fire Hydrants, Highways, and Fences 4-5
4.10. Preservation of Property 4-6
4.11. Contractor’s Responsibility for the Work 4-6
4.12. Indemnification 4-7
4.13. Contractor’s Insurance 4-7
4.13.01. General 4-7
4.13.02. Insurance on Work and Material 4-7
4.14. Payment of Taxes 4-8
4.15. Cooperation With Others 4-8
4.16. Property Rights in Material 4-8
4.17. Rights in Land and Improvements 4-9
4.18. Title to Material Found on the Work 4-9
4.19. Trespass 4-9
4.20. Subcontracting 4-9
4.21. Assignment of Antitrust Claims 4-10
4.22. Termination of Control 4-10
4.23. Termination of Contract 4-10
4.24. Contractor’s Cost Data 4-10
4.25. Coordination With Utilities 4-10
4.26. Asbestos-Related Work 4-12

Page

SECTION 5. PROSECUTION AND PROGRESS OF WORK.....5-1

5.01. Assignment 5-1
5.02. Notice to Proceed.....5-1
5.03. Commencement of Work.....5-1
5.04. Professional Scheduler.....5-1
5.05. Progress Schedules 5-2
5.05.01. Preliminary Progress Schedule 5-2
5.05.02. Baseline Progress Schedule.....5-2
5.05.03. Revised Baseline Schedules 5-5
5.05.04. Updates to the Detailed Progress Schedules 5-5
5.05.05 Time Impact Analysis 5-6
5.05.06. “Three-Week-Look-Ahead” Schedules 5-7
5.05.07. Payment.....5-7
5.06. Temporary Suspension of Work 5-7
5.07. Liquidated Damages 5-8

SECTION 6. MEASUREMENT AND PAYMENT.....6-1

6.01. Schedule of Values 6-1
6.01.01. Preparation.....6-1
6.01.02. Submittal 6-1
6.01.03. Revision 6-1
6.02. Application for Payment.....6-2
6.02.01. Preparation.....6-2
6.02.02. Submittal of Application for Payment.....6-3
6.02.03. Review of Application for Payment 6-4
6.02.04. Payment.....6-5
6.02.05. Withholding from Payments.....6-7
6.03. Final Payment 6-8

SECTION 7. SUBMITTAL MANAGEMENT.....7-1

7.01. Submittal Requirements 7-1
7.02. Master Submittal List.....7-1
7.03. Timing of Submittals.....7-2
7.04. Submittal Format.....7-2
7.05. Submittals to be Furnished by the Contractor.....7-4
7.06. Submittal Review Procedures.....7-7
7.07. Substitutions.....7-10
7.08. “Or Equal” Items.....7-11
7.09. Sole/Single Source.....7-12

SECTION 8. SAFETY AND SECURITY MANAGEMENT.....8-1

8.01. Public Safety 8-1
8.02. Accident Prevention 8-1
8.03. Explosives and Stream Pollution 8-2
8.04. Fires 8-2
8.05. Excavation Safety Plans.....8-2
8.06. Tunnel Construction Safety 8-3

Page

8.07. Confined Space Program 8-3
8.08. Temporary Facilities 8-4
8.09. Injury and Illness Prevention Program 8-5
8.10. Safety and Health Program for Hazardous Waste Operations 8-6
8.11. Site Safety and Health Supervisor 8-6
8.12. Site-Specific Safety and Health Plan 8-7
8.13. Safety and Health Plan Implementation 8-9
8.14. Submittals 8-9
8.15. Security Requirements at Job Site 8-11
8.16. General 8-11
8.17. Identification and Badging 8-12
8.18. Background Checks 8-13
8.19. Site Access Control 8-13
8.20. Mail and Postal Deliveries to the Project Site 8-14
8.21. Productivity Lost for Noncompliance With Security Measures 8-14
8.22. Payment 8-14

SECTION 9. QUALITY MANAGEMENT 9-1

9.01. General Quality Requirements 9-1
9.02. District Quality and Environmental Policy Training 9-1
9.03. Contractor's Quality Control Program 9-1
9.04. Quality Coordination Meetings 9-4
9.05. Documented Quality Control Records 9-6
9.06. Inspection and Daily Reports 9-6
9.06.01. Inspection 9-6
9.06.02. Daily Inspection Reports 9-8
9.07. Plant Inspection 9-9
9.08. Sampling of Material 9-10
9.09. Testing 9-10
9.10. District Quality Assurance 9-12
9.10.01 Testing by the District 9-12
9.10.02 Defective Work 9-12
9.11. Plumbing and Piping Quality 9-13
9.12. Control of Materials and Equipment 9-13
9.12.01. Source of Material and Equipment 9-13
9.12.02. Product Data and Samples 9-14
9.12.03. Transportation and Delivery 9-14
9.12.04. Storage and Protection of Material 9-15
9.12.05. Maintenance and Protection of Installed or Stored Equipment 9-16
9.13. District-Furnished Material 9-17
9.14. Final Inspection of Work 9-17

SECTION 10. ENVIRONMENTAL 10-1

10.01. Good Neighbor Requirements 10-1
10.02. Storm Water Pollution Prevention Plan 10-1
10.02.01. Storm Water BMPs 10-2
10.02.02. Regulatory Fines 10-2
10.03. Water Pollution Discharges and Remedies 10-3

Page

10.04. Water Quality 10-3
10.05. Burial Sites 10-4
10.06. Cultural Resources (Archeological Discovery) 10-4
10.07. Noise Pollution and Vibration 10-5
10.08. Air Pollution 10-6
10.09. Spillage and Dust Control 10-6
10.10. Traffic Control 10-7
10.11. Regulated Material Management 10-9
10.11.01. Storage of Regulated Material 10-9
10.11.02. Regulated Material Discharges or Releases 10-10
10.11.03. Hazardous Waste 10-11
10.12. Non-regulated Materials 10-12
10.12.01. Disposal at Other than State-Permitted Landfills 10-12
10.13. Imported Earthfill Material 10-13
10.14. Migratory Birds 10-13
10.14.01. Scope of Work 10-14
10.14.02. Migratory Bird Surveys 10-15
10.14.03. Migratory Bird Monitoring 10-15
10.14.04. Protective Buffer Zones 10-15
10.14.05. Exclusion Devices 10-17
10.14.06. Nest Prevention 10-17
10.14.07. Submittals 10-18
10.15. Other Wildlife and Fish Species 10-18
10.16. Sensitive Plants and Vegetation 10-18
10.17. Proper Pruning Techniques for Woody Vegetation Removal 10-19

SECTION 11. CONTRACT CLOSEOUT 11-1

11.01. Project Completion and Acceptance 11-1
11.01.01. Use Before Acceptance 11-1
11.01.02. Contractor's Responsibility to Manage Incomplete and Deficient Work 11-2
11.01.03. Milestone Completion Preliminary Final Inspection 11-2
11.01.04. Milestone Completion Final Inspection 11-3
11.01.05. Project Completion 11-4
11.01.06. Acceptance of Work 11-4
11.02. Guarantee and Guaranty Bond 11-5
11.02.01. Guarantee 11-5
11.02.02. Guaranty Bond 11-6
11.02.03. Use Before Acceptance Guarantee 11-9
11.03. Submission of Closeout Items 11-10
11.03.01. As-Built Drawings 11-10
11.03.02. Closeout Documents 11-10
11.03.03. Keys 11-11
11.04. Final Cleaning 11-11
11.04.01. Scope and Schedule for Final Cleaning 11-11
11.04.02. Final Cleanup 11-11
11.04.03. Structures 11-11
11.04.04. Streets, Roadways, Concrete Slabs, Sidewalks, and Paved Areas 11-12
11.04.05. Storm Drainage Facilities 11-12
11.04.06. Unpaved Areas 11-13

Page

SPECIAL PROVISIONS

SECTION 12. WORK AND CONTRACT TIME(S) 12-1

12.01. Summary of Work 12-1
12.02. Drawings 12-3
12.03. Contract Time(s) 12-3
12.04. Inclement Weather 12-4
12.05. Liquidated Damages 12-4
12.06. Bonus 12-5
12.07. Changes 12-5

SECTION 13. GENERAL REQUIREMENTS 13-1

13.01. Abbreviations and Acronyms 13-1
13.02. Definition of Key Terms 13-1
13.03. Site Investigation 13-1
13.04. District-Furnished Reports 13-1
13.04.01. Geotechnical Reports 13-2
13.04.02. Environmental Reports 13-2
13.04.03. Hazardous Material Investigation Reports 13-3
13.04.04. Cultural Resources Report 13-3
13.04.05. As-Built Documents 13-3
13.05. Contractor's Engineering and Design 13-5
13.05.01. Seismic Design Criteria 13-5
13.05.02. Wind Design Criteria 13-5
13.05.03. Hydraulic Design Criteria 13-5
13.05.04. Truck Loading 13-6

SECTION 14. SPECIAL REQUIREMENTS 14-1

14.01. Engineer 14-1
14.02. Project Signs 14-1
14.02.01. Payment 14-2
14.03. Office Facilities 14-2
14.03.01. Engineer's Office 14-2
14.03.02. Contractor's Office 14-5
14.03.03. Removal and Disposal 14-6
14.03.04. Payment 14-6
14.04. Use of District Facilities 14-6
14.05. Temporary Utilities 14-6
14.05.01. Payment 14-8
14.06. Staging Area 14-8
14.06.01. Payment 14-9
14.07. District-Furnished Material and Equipment 14-9
14.07.01. Assignment of Contract for District-Procured Material 14-9
14.08. Salvaged Material and Equipment 14-9
14.09. Tools and Spare Parts 14-10
14.10. Operation and Maintenance Documents 14-10
14.11. Maintenance of Record Documents 14-10

Page

14.11.01. As-Built Drawings 14-11
14.12. Emergency Work 14-12
14.13. Dispute Review Board 14-12
14.14. Escrow Bid Documents 14-12
14.15. Professionally Facilitated Project Partnering 14-13
14.16. Insurance 14-13
14.16.01. Required Coverages 14-13
14.16.02. General Requirements 14-15

SECTION 15. GENERAL COORDINATION 15-1

15.01. Meeting Requirements 15-1
15.01.01. Preconstruction Meeting 15-1
15.01.02. Progress Meetings 15-1
15.01.03. Coordination and Special Meetings 15-3
15.02. Integration and Coordination with District Operations 15-3
15.02.01. Overview of Existing Systems and Facilities 15-3
15.02.02. Requirements of an Operational Facility or System 15-4
15.03. Coordination of Work Activities 15-4
15.03.01. Work by Others 15-4
15.03.02. Coordination with Others 15-5
15.04. Construction Survey 15-5
15.05. Public Notification 15-8

SECTION 16. WORK CONSTRAINTS AND SITE RESTRICTIONS 16-1

16.01. General Work Constraints 16-1
16.02. Utilities 16-1
16.02.01. Utility Coordination 16-1
16.02.02. Protection of Existing Utilities 16-2
16.02.03. Utility Installation/Relocation by Others 16-4
16.02.04. Utility Relocations 16-4
16.02.04.01. E-Line Station 17+30± Comcast Cable Line Relocation 16-4
16.02.05. Pothole—Bid Item No. 2 16-5
16.02.05.01. Scope of Work 16-5
16.02.05.02. Submittals 16-5
16.02.05.03. Payment 16-6
16.03. Protection of Existing Improvements 16-6
16.03.01. Survey Monuments 16-6
16.04. Monitoring Surveys—Bid Item No. 3 16-7
16.04.01. Preconstruction Survey Within the Project Limits 16-7
16.04.02. Surveys of Properties in the Vicinity of the Work 16-7
16.04.03. Payment 16-9
16.05. Rights of Way 16-9
16.05.01. District-Furnished Right of Way 16-10
16.05.02. Contractor-Furnished Right of Way 16-11
16.05.03. Temporary Construction Easements 16-11
16.06. Access to Properties Owned by Others 16-12
16.07. Access to the Job Site 16-12
16.08. Access Roads Within the Job Site 16-13

Page

16.09. District Use of Facilities/Premises Within the Work Area 16-13
16.10. Headwall Footing Excavation Constraints Near VTA/BART 16-14
16.11. Work Period Restrictions 16-14

SECTION 17. SAFETY AND SECURITY 17-1

17.01. Safety 17-1
17.01.01. Temporary Facilities 17-2
17.02. Safety and Health Program 17-2
17.03. Security Requirements at Job Site 17-2
17.03.01. General 17-2
17.03.02. Identification and Badging 17-2
17.03.03. Background Checks 17-2
17.03.04. Site Access Control 17-2
17.03.05. Mail and Postal Deliveries to the Project Site 17-2
17.04. Payment 17-3

SECTION 18. PERMITS AND REGULATIONS 18-1

18.01. Permits and Agreements 18-1
18.01.01. District-Obtained Permits 18-1
18.01.02. Contractor-Obtained Permits 18-2
18.01.03. Operation Regulations 18-2
18.02. Hours of Work 18-3
18.03. Noise Pollution and Vibration Monitoring – Bid Item No. 4 18-3
18.03.01. Noise 18-3
18.03.02. Noise Monitoring 18-5
18.03.03. Vibration Monitoring 18-5
18.03.04. Payment 18-9
18.04. Air Pollution 18-10
18.05. Spillage and Dust 18-10
18.05.01. Spillage and Dust Nuisance 18-11
18.06. Traffic Control 18-11
18.07.01. Truck Traffic and Hauling 18-13
18.07.02. Truck Arriving Early, Truck Idling, and Queuing 18-13
18.08. Parking 18-14
18.09. Discovery of Archeological Artifacts and Human Remains 18-15
18.10. Aesthetic Requirements 18-15
18.11. Recreation 18-16
18.12. Utilities and Service System 18-16
18.13. Payment 18-16

SECTION 19. ENVIRONMENTAL 19-1

19.01. Compliance with NPDES General Permit—Bid Item No. 1 19-1
19.01.01. SWPPP 19-2
19.01.02. Storm Water BMPs 19-2
19.01.03. Risk Level 1 Requirements 19-7
19.01.04. Risk Level 2 Requirements 19-7
19.01.05. Payment 19-9

Page

19.02. Other Discharge Permits 19-9
19.03. BMP Action Plan 19-10
19.04. Water Pollution Discharges 19-10
19.05. Regulated Material Management 19-10
19.05.01. Asbestos Management 19-10
19.05.02. Lead Management 19-11
19.06. Solid Materials Management 19-11
19.06.01. Definitions 19-11
19.06.02. Construction and Demolition Waste Management 19-12
19.06.03. Post-Consumer Recycled Content (PCRC) Requirements 19-13
19.07. Migratory Birds – Bid Item No. 5 19-13
19.07.01. Regulatory Requirements 19-13
19.07.02. Qualified Biologist 19-13
19.07.03. General Nesting Seasons 19-14
19.07.04. Protective Buffer Zones 19-14
19.07.05. Exclusion Devices 19-15
19.07.06. Nest Prevention 19-15
19.07.07. Submittals 19-15
19.07.08. Payment 19-15
19.08. Other Wildlife and Fish Species 19-16
19.09. Sensitive Plants and Vegetation 19-17
19.10. Proper Pruning Techniques for Woody Vegetation Removal 19-17
19.11. Plant Pathogen Management 19-17
19.12. Payment 19-17

SECTION 20. SUBMITTAL AND QUALITY REQUIREMENTS 20-1

20.01. Additional Submittal Requirements 20-1
20.01.01. Summary 20-1
20.01.02. Computer and Connectivity Requirements 20-2
20.01.03. Contractor Responsibility 20-3
20.01.04. Training 20-3
20.01.05. ProjectWise Utilization 20-3
20.01.06. General Requirements 20-5
20.01.07. Immediate Submittals 20-5
20.01.08. Special Review Cycle 20-5
20.01.09. Copies 20-5
20.02. Exclusive Testing by the District 20-6
20.03. Additional Testing Certifications 20-6
20.04. Contractor's Quality Control – Bid Item No. 6 20-7
20.04.01. Quality Control Plan 20-7
20.04.02. Contractor's Quality Control Staffing Requirements 20-7
20.04.03. Payment 20-8

SECTION 21. PAYMENT PROCEDURES 21-1

21.01. Bid Items 21-1
21.01.01. General Requirements 21-1
21.01.02. Description of Bid Items 21-1
21.02. Progress Payments and Schedule of Values 21-2

Page

21.02.01. Preparation 21-2
21.02.02. Submittals 21-3
21.02.03. Preliminary Schedule of Values 21-3
21.03. Progress Payment Retention 21-4

SECTION 22. CONTRACT CLOSEOUT 22-1

22.01. Project Completion and Acceptance 22-1
22.01.01. Use Before Acceptance 22-1
22.01.02. Milestone Completion Preliminary Final Inspection 22-1
22.01.03. Acceptance of Work 22-1
22.02. Guarantee and Guaranty Bond 22-1
22.03. Training 22-2
22.04. Testing and Facility Start-Up 22-2
22.05. Submission of Closeout Items 22-2
22.05.01. Record Drawings and Specifications 22-2
22.05.02. Closeout Documents 22-3
22.05.03. Keys 22-3
22.06. Final Cleaning 22-3
22.06.01. Schedule for Final Cleaning 22-3
22.06.02. Structures 22-3
22.06.03. Streets, Roadways, Concrete Slabs, Sidewalks, and Paved Areas 22-3
22.06.04. Storm Drainage Facilities 22-4
22.06.05. Unpaved Areas 22-4
22.06.06. Payment 22-4

TECHNICAL PROVISIONS

SECTION 23. PREPARATORY WORK 23-1

23.01. Mobilization and Demobilization—Bid Item No. 7 23-1
23.01.01. Scope of Work 23-1
23.01.02. Materials 23-2
23.01.03. Placement 23-2
23.01.04. Testing 23-2
23.01.05. Submittals 23-2
23.01.06. Measurement 23-2
23.01.07. Payment 23-2
23.02. Clearing and Grubbing—Bid Item No. 8 23-3
23.02.01. Scope of Work 23-3
23.02.02. Materials 23-7
23.02.03. Placement 23-7
23.02.04. Testing 23-8
23.02.05. Submittals 23-8
23.02.06. Measurement 23-8
23.02.07. Payment 23-8
23.03. Demolition and Disposal—Bid Item No. 9 23-9
23.03.01. Fence and Gate Removal 23-9
23.03.01.01. Scope of Work 23-9
23.03.01.02. Materials 23-9

Page

23.03.01.03. Placement 23-9
23.03.01.04. Testing 23-9
23.03.01.05. Submittal 23-9
23.03.01.06. Measurement 23-10
23.03.01.07. Payment 23-10
23.03.02. Site Demolition and Disposal 23-10
23.03.02.01. Scope of Work 23-10
23.03.02.02. Materials 23-10
23.03.02.03. Placement 23-11
23.03.02.04. Testing 23-11
23.03.02.05. Submittals 23-11
23.03.02.06. Measurement 23-12
23.03.02.07. Payment 23-12
23.03.03. Well Abandon and Removal 23-12
23.03.03.01. Scope of Work 23-12
23.03.03.02. Water Supply Wells (Not Used) 23-13
23.03.03.03. Monitoring Wells 23-13
23.03.03.04. Additional Requirements 23-14
23.03.03.05. Material and Procedures 23-14
23.03.03.06. Placement of Materials 23-15
23.03.03.07. Sealing Materials 23-16
23.03.03.08. Temporary Cover 23-16
23.03.03.09. Abandoned Cathodic Protection Wells 23-17
23.03.03.10. Payment 23-17
23.04. Removal, Salvage, Relocation of Existing Features 23-17
23.04.01. Payment 23-17
23.05. Control of Water—Bid Item No. 10 23-17
23.05.01. Control of Water Within Existing Course 23-17
23.05.01.01. Scope of Work 23-17
23.05.01.02. Materials 23-19
23.05.01.03. Submittals 23-20
23.05.01.04. Measurement 23-20
23.05.01.05. Payment 23-20
23.05.02. Temporary Water Diversion 23-20
23.05.02.01. Scope of Work 23-20
23.05.02.02. Testing 23-22
23.05.02.03. Submittals 23-22
23.05.02.04. Measurement 23-22
23.05.02.05. Payment 23-22
23.06. Temporary Erosion Control 23-22
23.06.01. Temporary Silt Fence 23-22
23.06.01.01. Scope of Work 23-22
23.06.01.02. Materials 23-23
23.06.01.03. Placement 23-24
23.06.01.04. Testing 23-25
23.06.01.05. Submittals 23-25
23.06.01.06. Measurement 23-25
23.06.01.07. Payment 23-26
23.06.02. Temporary Fiber Rolls 23-26
23.06.02.01. Scope of Work 23-26

Page

23.06.02.02. Materials ... 23-26
23.06.02.03. Placement ... 23-27
23.06.02.04. Maintenance ... 23-27
23.06.02.05. Removal ... 23-28
23.06.02.06. Testing ... 23-28
23.06.02.07. Submittals ... 23-28
23.06.02.08. Measurement ... 23-29
23.06.02.09. Payment ... 23-29
23.06.03. Temporary Hydroseeding ... 23-29
23.06.03.01. Scope of Work ... 23-29
23.06.03.02. Materials ... 23-29
23.06.03.03. Soil Preparation ... 23-30
23.06.03.04. Placement ... 23-30
23.06.03.05. Testing ... 23-30
23.06.03.06. Submittals ... 23-30
23.06.03.07. Measurement ... 23-30
23.06.03.08. Payment ... 23-30
23.07. Erosion Control ... 23-30
23.07.01. Scope of Work ... 23-30
23.07.02. Materials ... 23-31
23.07.03. Placement ... 23-31
23.07.04. Testing ... 23-31
23.07.05. Submittals ... 23-31
23.07.06. Measurement ... 23-31
23.07.07. Payment ... 23-32
23.08. Hydroseeding ... 23-32
23.08.01. Scope of Work ... 23-32
23.08.02. Materials ... 23-32
23.08.03. Soil Preparation ... 23-34
23.08.04. Placement ... 23-34
23.08.05. Testing ... 23-35
23.08.06. Submittals ... 23-35
23.08.07. Measurement ... 23-36
23.08.08. Payment ... 23-36
23.09. Erosion Control Blanket ... 23-36
23.09.01. Scope of Work ... 23-36
23.09.02. Materials ... 23-36
23.09.03. Fasteners ... 23-37
23.09.04. Placement ... 23-37
23.09.05. Testing ... 23-38
23.09.06. Submittals ... 23-38
23.09.07. Measurement ... 23-38
23.09.08. Payment ... 23-38

SECTION 24. EARTHWORK ... 24-1

24.01. Channel Excavation, Topsoil, and Channel Embankment ... 24-1
24.01.01. Channel Excavation—Bid Item No. 11 ... 24-1
24.01.01.01. Scope of Work ... 24-1
24.01.01.02. Materials ... 24-3

Page

24.01.01.03. Placement 24-3
24.01.01.04. Testing 24-5
24.01.01.05. Submittals 24-5
24.01.01.06. Measurement 24-5
24.01.01.07. Payment 24-6
24.01.02. Topsoil—Bid Item No. 12, Additional Topsoil—Supplemental Bid Item No. 1 24-6
24.01.02.01. Scope of Work 24-6
24.01.02.02. Materials 24-7
24.01.02.03. Placement 24-7
24.01.02.04. Testing 24-9
24.01.02.05. Submittals 24-9
24.01.02.06. Measurement 24-9
24.01.02.07. Payment 24-10
24.01.03. Channel Embankment—Bid Item No. 13 24-10
24.01.03.01. Scope of Work 24-10
24.01.03.02. Materials 24-11
24.01.03.03. Placement 24-12
24.01.03.04. Testing 24-13
24.01.03.05. Submittals 24-14
24.01.03.06. Measurement 24-15
24.01.03.07. Payment 24-15
24.02. Trench Excavation 24-16
24.02.01. Scope of Work 24-16
24.02.02. Material/Placement 24-17
24.02.03. Testing 24-17
24.02.04. Submittals 24-17
24.02.05. Measurement 24-17
24.02.06. Payment 24-18
24.03. Trench Backfill 24-18
24.03.01. Scope of Work 24-18
24.03.02. Materials 24-18
24.03.02.01. Placement 24-19
24.03.02.02. Testing 24-19
24.03.02.03. Submittals 24-19
24.03.02.04. Measurement 24-20
24.03.02.05. Payment 24-20
24.04. Structural Excavation 24-20
24.04.01. Scope of Work 24-20
24.04.02. Materials 24-21
24.04.03. Placement 24-21
24.04.04. Testing 24-22
24.04.05. Submittals 24-22
24.04.06. Measurement 24-23
24.04.07. Payment 24-23
24.05. Structural Backfill 24-23
24.05.01. Scope of Work 24-23
24.05.02. Materials 24-23
24.05.03. Placement 24-24
24.05.04. Testing 24-24

Page

24.05.05. Submittals 24-25
24.05.06. Measurement 24-25
24.05.07. Payment 24-25
24.06. Unsuitable Materials 24-25
24.06.01. Scope of Work 24-25
24.06.02. Materials 24-26
24.06.03. Placement 24-26
24.06.04. Testing 24-26
24.06.05. Submittals 24-27
24.06.06. Measurement 24-27
24.06.07. Payment 24-27
24.07. Permeable Material 24-27
24.07.01. Scope of Work 24-27
24.07.02. Materials 24-27
24.07.03. Placement 24-27
24.07.04. Testing 24-28
24.07.05. Submittals 24-28
24.07.06. Measurement 24-28
24.07.07. Payment 24-28
24.08. Geotextile Fabric 24-28
24.08.01. Scope of Work 24-28
24.08.02. Materials 24-28
24.08.03. Placement 24-29
24.08.04. Testing 24-29
24.08.05. Submittals 24-30
24.08.06. Measurement 24-30
24.08.07. Payment 24-30
24.09. Rock Protection – Bid Item No. 14 24-30
24.09.01. Scope of Work 24-30
24.09.02. Materials 24-30
24.09.03. Placement 24-31
24.09.04. Testing 24-31
24.09.05. Submittals 24-31
24.09.06. Measurement 24-31
24.09.07. Payment 24-31
24.10. Wood Mulch 24-32
24.10.01. Scope of Work 24-32
24.10.02. Materials 24-32
24.10.03. Placement 24-32
24.10.04. Measurement 24-32
24.10.05. Payment 24-32
24.11. Shoring – Bid Item No. 15 24-32
24.11.01. Scope of Work 24-32
24.11.02. Materials 24-34
24.11.03. Placement 24-35
24.11.04. Testing 24-36
24.11.05. Submittals 24-36
24.11.06. Measurement 24-37
24.11.07. Payment 24-37

Page

SECTION 25. SURFACING AND PAVEMENTS 25-1

25.01. Exterior Flatwork Within City Right of Way—Bid Item No. 16 25-1
25.01.01. Scope of Work 25-1
25.01.02. Materials 25-1
25.01.03. Placement 25-2
25.01.04. Testing (To Be Performed by District) 25-3
25.01.05. Submittals 25-3
25.01.06. Measurement 25-3
25.01.07. Payment 25-3
25.02. Maintenance Road and Maintenance Access—Bid Item No. 17 25-3
25.02.01. Scope of Work 25-3
25.02.02. Materials 25-3
25.02.03. Placement 25-4
25.02.04. Testing 25-5
25.02.05. Submittals 25-5
25.02.06. Measurement 25-5
25.02.07. Payment 25-5
25.03. Aggregate Base 25-5
25.03.01. Scope of Work 25-5
25.03.02. Materials 25-6
25.03.03. Placement 25-6
25.03.04. Testing 25-6
25.03.05. Submittals 25-7
25.03.06. Measurement 25-7
25.03.07. Payment 25-7
25.04. Articulated Concrete Block 25-7
25.04.01. Scope of Work 25-7
25.04.02. Materials and Equipment 25-7
25.04.03. Placement 25-12
25.04.04. Testing 25-15
25.04.05. Submittals 25-15
25.04.06. Warranty 25-15
25.04.07. Measurement 25-15
25.04.08. Payment 25-16
25.05. Asphalt Concrete 25-16
25.05.01. Scope of Work 25-16
25.05.02. Materials 25-16
25.05.03. Placement 25-16
25.05.04. Testing 25-16
25.05.05. Submittals 25-17
25.05.06. Measurement 25-17
25.05.07. Payment 25-17
25.06. Drywell 25-17
25.06.01. Scope of Work 25-17
25.06.02. Materials 25-17
25.06.03. Placement 25-17
25.06.04. Measurement 25-18
25.06.05. Payment 25-18
25.07. Lower Berryessa Creek Trail—Bid Item No. 25 25-18

Page

25.07.01. Scope of Work 25-18
25.07.02. Materials 25-18
25.07.03. Placement 25-19
25.07.04. Testing 25-19
25.07.05. Submittals 25-19
25.07.06. Measurement 25-19
25.07.07. Payment 25-19

SECTION 26. SITE UTILITIES 26-1

26.01. Site Utilities—Bid Item No. 18 26-1
26.01.01. Scope of Work 26-1
26.01.02. Materials 26-2
26.01.03. Placement 26-3
26.01.04. Testing 26-3
26.01.05. Submittals 26-4
26.01.06. Measurement 26-4
26.01.07. Payment 26-4
26.02. HDPE Pipe 26-4
26.02.01. Scope of Work 26-4
26.02.02. Materials 26-4
26.02.03. Placement 26-5
26.02.04. Testing 26-5
26.02.05. Submittals 26-5
26.02.06. Measurement 26-5
26.02.07. Payment 26-5
26.03. City Storm Drain Outfall Modifications—Bid Item No. 26 26-5
26.03.01. Scope of Work 26-5
26.03.02. Materials 26-6
26.03.03. Placement 26-7
26.03.04. Testing 26-7
26.03.05. Submittals 26-7
26.03.06. Measurement 26-7
26.03.07. Payment 26-7

SECTION 27. TRAFFIC CONTROL 27-1

27.01. Traffic Control 27-1
27.01.01. Scope of Work 27-1
27.01.02. Materials 27-3
27.01.03. Placement 27-3
27.01.04. Testing 27-4
27.01.05. Submittals 27-4
27.01.06. Measurement 27-4
27.01.07. Payment 27-5

Page

SECTION 28. MISCELLANEOUS ITEMS 28-1

28.01. Chain Link Fence and Gates—Bid Item No. 19 28-1
28.01.01. Scope of Work.... 28-1
28.01.02. Materials.... 28-1
28.01.03. Placement 28-2
28.01.04. Testing 28-2
28.01.05. Submittals 28-2
28.01.06. Measurement 28-3
28.01.07. Payment.... 28-3
28.02. Passive Flood Gate – Bid Item No. 20.... 28-3
28.02.01. Scope of Work.... 28-3
28.02.02. Design.... 28-3
28.02.03. Materials.... 28-4
28.02.03. Placement 28-4
28.02.04. Testing and Commissioning 28-5
28.02.05. Submittals 28-6
28.02.06. Measurement 28-6
28.02.07. Payment.... 28-6

SECTION 29. CONCRETE 29-1

29.01. Structural Concrete 29-1
29.01.01. Scope of Work.... 29-1
29.01.02. Materials.... 29-1
29.01.03. Placement 29-2
29.01.04. Testing 29-4
29.01.05. Submittals 29-4
29.01.06. Measurements.... 29-4
29.01.07. Payment.... 29-5
29.02. Controlled Density Fill.... 29-5
29.02.01. Scope of Work.... 29-5
29.02.02. Materials.... 29-5
29.02.03. Placement 29-5
29.02.04. Testing 29-5
29.02.05. Submittals 29-5
29.02.06. Measurement 29-5
29.02.07. Payment.... 29-5
29.03. Not Used 29-6
29.04. Joints, Waterstops and Sealants 29-6
29.04.01. Scope of Work.... 29-6
29.04.02. Materials/Placement.... 29-6
29.04.03. Testing 29-6
29.04.04. Submittals 29-6
29.04.05. Measurement 29-7
29.04.06. Payment.... 29-7
29.05. Formwork and Falsework 29-7
29.05.01. Scope of Work.... 29-7
29.05.02. Materials/Placement.... 29-7
29.05.03. Testing 29-7

Page

29.05.04. Submittals 29-7
29.05.05. Measurements..... 29-7
29.05.06. Payment..... 29-8
29.06. Anti-Graffiti Treatment (Not Used) 29-8
29.07. Non-Shrink Non-Metallic Grout and Cement Mortar 29-8
29.07.01. Scope of Work..... 29-8
29.07.02. Materials..... 29-8
29.07.03. Placement 29-8
29.07.04. Testing 29-8
29.07.05. Submittals 29-8
29.07.06. Measurements..... 29-8
29.07.07. Payment..... 29-9
29.08. Shotcrete (Air Blown Mortar) 29-9
29.08.01. Scope of Work..... 29-9
29.08.02. Definitions 29-9
29.08.03. Materials..... 29-9
29.08.04. Placement 29-10
29.08.05. Testing 29-12
29.08.06. Submittals 29-14
29.08.07. Measurement 29-15
29.08.08. Payment..... 29-15

SECTION 30. SPECIAL CONCRETE STRUCTURES 30-1

30.01. Flood Walls—Bid Item No. 21..... 30-1
30.01.01. Scope of Work..... 30-1
30.01.02. Materials..... 30-1
30.01.03. Placement 30-2
30.01.04. Testing 30-3
30.01.05. Submittals 30-3
30.01.06. Measurements..... 30-3
30.01.07. Payment..... 30-3
30.02. Structural Drainage 30-4
30.02.01. Scope of Work..... 30-4
30.02.02. Materials..... 30-4
30.02.03. Placement 30-4
30.02.04. Testing 30-4
30.02.05. Submittals 30-4
30.02.06. Measurement 30-5
30.02.07. Payment..... 30-5
30.03. Architectural Treatment – Bid Item No. 22..... 30-5
30.03.01. Scope of Work..... 30-5
30.03.02. Materials..... 30-5
30.03.03. Placement 30-6
30.03.04. Test Panel..... 30-7
30.03.05. Submittals 30-7
30.03.06. Measurement 30-7
30.03.07. Payment..... 30-7

Page

SECTION 31. WETLAND BROADCAST SEEDING AND PLANTING.....31-1

31.01. Wetland Broadcast Seeding and Planting—Bid Item No. 23..... 31-1
31.01.01. Scope of Work..... 31-1
31.01.02. Materials..... 31-2
31.01.03. Soil Preparation..... 31-4
31.01.04. Placement 31-4
31.01.05. Testing 31-8
31.01.06. Submittals 31-8
31.01.07. Measurement 31-9
31.01.08. Payment..... 31-9
31.02. Landscape Planting..... 31-9
31.02.01. Scope of Work..... 31-9
31.02.02. Materials..... 31-10
31.02.03. Soil Preparation..... 31-13
31.02.04. Placement 31-13
31.02.05. Testing 31-18
31.02.06. Submittals 31-18
31.02.07. Measurement 31-19
31.02.08. Payment..... 31-19
31.03. Irrigation 31-20
31.03.01. Scope of Work..... 31-20
31.03.02. Materials..... 31-20
31.03.03. Installation 31-23
31.03.04. Testing 31-28
31.03.05. Submittals 31-29
31.03.06. Measurement 31-30
31.03.07. Payment..... 31-30

SECTION 32. ESTABLISHMENT MAINTENANCE.....32-1

32.01. Establishment Maintenance—Bid Item No. 24..... 32-1
32.01.01. Scope of Work..... 32-1
32.01.02. Materials..... 32-3
32.01.03. Placement 32-4
32.01.04. Testing 32-13
32.01.05. Submittals 32-13
32.01.06. Measurement 32-13
32.01.07. Payment..... 32-13
32.03. Contingency Irrigation-Supplemental Bid No. 2 32-14
32.03.01. Scope of Work..... 32-14
32.03.02. Materials..... 32-15
32.03.03. Placement 32-15
32.03.04. Testing 32-15
32.03.05. Submittals 32-15
32.03.06. Measurement 32-16
32.03.07. Payment..... 32-16

Page

TABLE 16.04-1
Structural Surveys 16-8

TABLE 18.03-1
Building/Feature Movement, Crack, and Vibration Monitoring Minimum Monitoring Locations 18-6

TABLE 21.02-1
Preliminary Schedule of Values 21-3

TABLE 23.08-1
Hydroseed for All Areas 23-32

TABLE 25.04-1
ACB Hydraulic Information 25-9

TABLE 25.04-2
Physical Requirements 25-10

TABLE 25.04-3
Standard Sizes of Articulated Concrete Blocks 25-12

TABLE 32.01-1
Vigor Standard Ratings 32-5

TABLE 32.01-2
Invasive Species List for Lower Calera Flood Protection Project 32-9

APPENDIX A
Agreement
Payment Bond
Performance Bond
Instructions for Completing SBE Utilization Report
Sample Small/Micro Business Enterprises (SBE) Utilization Report
Escrow Agreement for Security Deposit in Lieu of Retention

APPENDIX B
Environmental – Minimum Qualifications of the Contractor Biologist

APPENDIX C
Permits and Licenses

1. Fish and Game Code Section 1602 Streambed Alteration Agreement 1600-2013-0159-R3 (California Department of Fish and Wildlife)

2. Amendment 1 of Lake or Streambed Alteration Agreement 1600-2013-0159-R3 (California Department of Fish and Wildlife)

3. Amendment 2 of Lake or Streambed Alteration Agreement 1600-2013-0159-R3 (California Department of Fish and Wildlife)

4. Amendment 3 of Lake or Streambed Alteration Agreement 1600-2013-0159-R3 (California Department of Fish and Wildlife)

5. Amendment 4 of Lake or Streambed Alteration Agreement 1600-2013-0159-R3 (California Department of Fish and Wildlife)

6. Extension of Lake or Streambed Alteration Agreement 1600-2013-0159-R3 (California Department of Fish and Wildlife)

7. Migratory Bird Permit Memorandum (MBPM) dated April 15, 2003 (United States Fish and Wildlife Service (USFWS))

8. Amended Conditional Water Quality Certification, CIWQS Place No. 768945 (MB), and CIWQS Regulatory Measure No. 397588 (San Francisco Bay Region Water Quality Control Board)

9. Second Amended Conditional Water Quality Certification, CIWQS Place No. 768945 (SG), and CIWQS Regulatory Measure No. 397588 (San Francisco Bay Region Water Quality Control Board)

10. Dewatering Plan – Construction within Lower Berryessa Creek Channel

11. CWA Section 404 Permit 2003-28440S (U.S. Army Corps of Engineers)

12. CWA Section 404 Permit 2003-28440S Time Extension (U.S. Army Corps of Engineers)

13. BART Example Site Specific Work Plan (SSWP)

14. VTA Construction Access Permit (CAP) #4 Application

15. Draft VTA Construction Access Permit #4 (CAP)

16. City of Milpitas Encroachment Permit Application

APPENDIX D

Best Management Practices for Pathogen Control

1. Control and Oversight of Pesticide Use (Valley Water)
2. Pesticide Products Approved for District Use (Valley Water)
3. General Construction – BMP for Pathogen Control
4. BMP: Draft Plant Pathogen Control for Planting at Field Sites

APPENDIX E

Temporary Construction Easements

1. 4018-6.1 Permission to Enter Form
2. APN: 022-31-000 (DOCUMENT NO.: 4018-27. Document: 23447601)
3. APN: 022-31-020 (DOCUMENT NO.: 4018-29. Document: 24043236)

APPENDIX F

District Forms

1. Solid Waste Disposal and Recycling Report Form
2. Import Material Certification Form

THIS PAGE INTENTIONALLY LEFT BLANK

STANDARD PROVISIONS

THIS PAGE INTENTIONALLY LEFT BLANK

STANDARD PROVISIONS

SECTION 1. DEFINITIONS

Whenever in these Specifications and other Contract Documents the following abbreviations and terms or pronouns in place of them are used, the intent and meaning shall be interpreted as follows:

ABBREVIATIONS

AASHTO	American Association of State Highway and Transportation Officials
ACI	American Concrete Institute
AISI	American Iron and Steel Institute
AIEE	American Institute of Electrical Engineers
AISC	American Institute of Steel Construction
ANSI	American National Standards Institute
API	American Petroleum Institute
AREA	American Railway Engineering Association
ASCE	American Society of Civil Engineers
ASHRAE	American Society of Heating, Refrigerating and Air Conditioning Engineers
ASME	American Society of Mechanical Engineers
ASTM	American Society of Testing and Materials
AWG	American Wire Gage
AWPA	American Wood Preservers' Association
AWS	American Welding Society
AWWA	American Water Works Association
BAAQMD	Bay Area Air Quality Management District
CAEPA	California Environmental Protection Agency
CCR	California Code of Regulations
CFR	Code of Federal Regulations
CIH	Certified Industrial Hygienist
CWA	Federal Clean Water Act
DHS	California Department of Health Services
HSC	California Health and Safety Code
IEEE	Institute of Electrical and Electronics Engineers
MSDS	Material Safety Data Sheet
NEC	National Electric Code
NEMA	National Electrical Manufacturers Association
NFPA	National Fire Protection Association
NPDES	National Pollution Discharge Elimination System
RWQCB	California Regional Water Quality Control Board
SAE	Society of Automotive Engineers
SWPPP	Storm Water Pollution Prevention Plan
SWRCB	California State Water Resources Control Board
UBC	Uniform Building Code
UL	Underwriters Laboratories
USEPA	United States Environmental Protection Agency
WCLB	West Coast Lumber Inspection Bureau
WWPA	Western Wood Products Association

DEFINITIONS

Acceptance: The formal, written acceptance of the Contract by the District's Board of Directors, as documented in a recorded Notice of Completion of Contract and Acceptance of Work. Acceptance indicates that all Work has been completed in all respects in accordance with the Drawings and Specifications and with any modifications thereof previously approved.

Activity Hazard Analysis (AHA)/Job Hazard Analysis (JHA): A form used to identify the task and break it down into steps, identify the hazards associated with each step, and identify the control measures used for each step to protect the worker, environment, or public. This form is also commonly referred to as a Job Safety Analysis (JSA).

Addendum: Written or graphic instruments issued prior to the opening of Proposals that make changes, additions, or deletions to the Bid Documents, or Contract Documents.

Agreement: The written document executed by the parties formalizing the Contract.

Approved, Directed, Ordered, or Required: Whenever these words or their derivatives are used, it is the intent, unless otherwise clearly stated, that approval or direction by the Engineer is indicated.

Article: A numbered portion of a title Section of the Specifications.

Bid: The completed Proposal and all associated Bid Forms, including Bidder's Bond or other Bidder's security. Bids not accompanied by the required documents are considered incomplete bids and are nonresponsive.

Bid Documents: All documents to be considered when preparing a Bid. The Notice to Bidders, Instructions to Bidders, Proposal and all accompanying Bid Forms, Bidder's Bond or other Bidder's security, and Contract Documents.

Bidder: Any individual, firm, partnership, corporation, or combination thereof, submitting a proposal for the Work contemplated, acting directly or through a duly authorized representative.

Board, Board of Directors: The Board of Directors of the District.

Certified Industrial Hygienist: A professional who is certified by the American Board of Industrial Hygienists as trained to evaluate safety and health hazards and to determine safety measures necessary for personnel working under hazardous conditions.

Code: The terms Government Code, Labor Code, etc. refer to codes of the State of California.

Competent Person: A person capable of identifying existing and predictable hazards in the surroundings or working conditions that are unsanitary, hazardous, or dangerous to employees, and who has authorization to take prompt, corrective measures to eliminate those conditions.

Construction Equipment: Equipment used for the performance of work but not incorporated into the Project.

Contract: The written Agreement between the Contractor and the District comprised of the Contract Documents.

Contract Documents: Refer to Article 2.01. Contract Documents and Precedence.

Contract Time(s): The time (Days) allowed for completion of the entire Work or portion thereof as defined by specified Milestones that meets the requirements of the Contract Documents and is accepted by the Engineer. See also Project Completion and Milestone Completion.

Contract Price(s): The price (dollars) for completion of the entire Work set forth in the Contract Documents.

Contractor: The entity or person with whom the District has executed the Contract and has identified as such therein and referred to throughout the Contract Documents as singular in number and neuter in gender. The term "Contractor" means Contractor or its authorized representative.

Controlling Item of Work: Any feature or combination of features of the Work considered at the time by the Engineer, which if delayed, will delay the completion of Work associated with a specified Contract Time(s).

Days: Calendar days, unless otherwise designated.

Delay: An increase in the duration or length of time for performing the Work that is caused by any event, action, inaction, or factor. The five types of delay are defined in Article 3.08. Change in Contract Time(s).

Definable Feature of Work: A task that is separate and distinct from other tasks and that has separate control requirements.

District: The Santa Clara Valley Water District.

Drawings: The official Drawings, working Drawings, detail Drawings, and supplemental Drawings, or reproductions thereof, that show the location, character, dimension, and details of the Work to be done and that are to be considered as part of the Contract.

Engineer: The designated Engineer as defined in Article 3.02. Engineer of the Standard Provisions who, acting either directly or through a properly designated representative, assumes all duties and responsibilities, and has all rights and authority in accordance with the Contract Documents.

Equipment: Equipment incorporated or to be incorporated into the Project.

First Chargeable Day: The first day of Contract Time allowed for completion of the entire Work. The First Chargeable Day will be specified in the Notice to Proceed.

Fixed Costs: Any necessary labor, Material, and Equipment costs directly expended on the item or items under consideration that remain constant regardless of the quantity of Work done.

Hazardous Material: (A) Any substance, product, waste, or other material of any nature whatsoever that is or that becomes listed, regulated, or addressed pursuant to any Federal, State, or Local Statute, Law, Ordinance, Resolution, Code, Rule, Regulation, Order, or Decree regulating, relating to, or imposing liability (including, but not limited to, response, removal, and Remediation costs) or standards of conduct or performance concerning any hazardous, toxic, explosive, corrosive, flammable, infectious, radioactive, carcinogenic, mutagenic, or as otherwise dangerous waste, substance, or material; (B) any substance, product, waste, or other material of any nature whatsoever whose presence in and of itself may give rise to liability under any of the above Statutes or under any statutory or common law theory based on negligence, trespass, intentional tort, nuisance, strict, or absolute liability or under any reported decisions of a State or Federal court; (C) any substance without limitation that contains petroleum or crude oil, including, but not limited to, petroleum and petroleum products.

Hazardous Waste: Any substance or material as defined in the California Hazardous Waste Control Act Health and Safety Code, Chapter 6.5, Sections 25100 - 25257.1, or in the Resource Conservation and Recovery Act, 42 U.S.C. 6901 et seq.

Liquidated Damages: The amount stated in the Specifications, as provided for in Government Code Section 53069.85, to be paid to the District or to be deducted from any payments due or to become due the Contractor for each Day of Inexcusable Delay in completing the whole or any specified portion of the Work beyond the specified Contract Time(s) or any other amount specifically stated as a Liquidated Damage in the Contract.

Material: Material incorporated or to be incorporated into the Project.

Milestone: A specified portion of the Work identified in the Contract as a Milestone that is to be completed under the Contract.

Milestone Completion: The date determined by the District when the Milestone is to be complete. Milestone Completion does not constitute acceptance but does establish the completion date of the Milestone for the purpose of assessing Liquidated Damages, if any, associated with the Milestone.

Personnel Protection: Equipment and procedures that minimize human exposure to Regulated Material, Hazardous Material, Hazardous Waste, or unsafe situations.

Plans, Construction Plans: See Drawings.

Project: The erection, construction, alteration, repair, or improvement to be accomplished under the Contract. Refer to Work.

Project Completion: The stage at which the whole Work is complete per the Contract Documents, and the Engineer has performed the final inspection and issued a Project Completion letter.

Proposal: The Proposal states the price for which the Bidder proposes and agrees to perform the Work. See Proposal and Bid Items, Bid Form No. 1.

Qualified Biologist: A biologist who has the experience, education and training necessary to perform specific tasks related to the biological subject discipline, and in an unbiased fashion. The term 'qualified biologist' is used generically to mean a biologist who is trained to perform the given task; specifically, a fisheries biologist, wildlife biologist, or botanist. Training must be in the field to which the task is related. (Refer to the appendices for specific fields of study).

Reasonable Accuracy: Within the tolerances as shown on the Drawings or as indicated in the Specifications.

Regulated Material: Any substance or combination of substances for which Federal, State, or Local regulations require special management, storage, disposal, or handling practices. This includes, but is not limited to, material defined as Hazardous Material and Waste; designated waste (California Water Code Section 13173); and special waste (California Code of Regulations, Title 22, Div. 4.5 [Environmental Health Standards for the Management of Hazardous Waste]).

Remediation: Restoration of contaminated soil, groundwater, or other materials to its pre-contaminated level or to a level acceptable to the District and Local, State, and Federal agencies.

Responsible Bidder: Responsible Bidder as defined in California Public Contract Code Section 1103.

Specifications: The directions, provisions, and requirements contained in the Standard Provisions, Special Provisions, and Technical Provisions.

Subcontractor: An entity or person contracting with the Contractor or with another Subcontractor to perform any portion of the Work. The term "Subcontractor" is referred to throughout the Contract Documents as singular in number and neuter in gender and means a Subcontractor or its authorized representative.

Supplier: An entity or person contracted with the District, the Contractor or its Subcontractors to provide materials and/or equipment for any portion of the Work. The term "Supplier" is referred to throughout the Contract Documents as singular in number and neuter in gender and means a Supplier or its authorized representative.

Total Bid Price: The sum stated in the Bid for which the Bidder offers to perform the Work described in the Bid Documents. The Total Bid Price shall include the entire cost of all Work necessary for a complete and fully operational structure or facility in accordance with the requirements of the Contract Documents.

Work: Refer to Article 3.01. Work to be Done, paragraph A. References in the Contract Documents to "Work" may be to specific items of Work.

THIS PAGE INTENTIONALLY LEFT BLANK

SECTION 2. CONTRACT DOCUMENTS

2.01. Contract Documents and Precedence

A. The Contract Documents comprise the entire Agreement between the District and the Contractor concerning the Work. The Contractor shall properly perform all requirements of the Contract Documents.

B. The Contract Documents include the District's Contract form and any exhibits attached thereto, including the Notice to Bidders, Instructions to Bidders, Proposal Form, Proposal, Standard Provisions, Special Provisions, Technical Provisions, Drawings, Specifications, Addenda, Appendices, approved Change Orders, and Directed Change Orders (DCO) as defined in Section 3, if any.

C. The Contract Documents are intended to be complementary and include all items necessary for the Contractor's proper execution and completion of the Work. Anything mentioned in the Specifications and not shown on the Drawings, or shown on the Drawings and not mentioned in the Specifications, shall be as if shown or mentioned in both. Any part of the Work not shown or mentioned in the Drawings or in the Specifications that is inferable or implied by either, or that is necessary or usual for proper performance of the Work, shall be provided by the Contractor at its own expense.

D. In case of conflicts, errors, and discrepancies in any of the Contract Documents, the order of precedence (from highest to lowest priority) is as follows. Within the same order of precedence, specific requirements shall take precedence over general requirements:

1. Change Orders (CO) or DCO
2. Agreement
3. Addenda
4. Special Provisions
5. Technical Provisions
6. Drawings/Plans
7. Standard Provisions
8. State Specifications and Plans
9. Appendices

E. With reference to the Drawings:

1. Figures or numerical dimensions govern over scaled dimensions.
2. Detail Drawings govern over general Drawings.

3. Addenda/CO or DCO Drawings govern over Contract Drawings.

4. Contract Drawings govern over standard Drawings.

5. Notes apply only to the Drawings where the notes appear, unless classified as “typical,” “general,” or “universally applicable,” in which case they apply to all Drawings where the conditions or circumstances noted occur.

6. Typical details apply to all Drawings, unless a specific, different detail is shown.

2.02. State Specifications and Plans

A. Unless otherwise stated, State Specifications and Plans referred to in these Specifications shall be the latest published edition of the State of California Department of Transportation Standard Specifications and Standard Plans and updates thereto and are by reference made a part of these Specifications the same as though set out in full, as to the provisions requiring compliance.

B. When specifically stated to follow the State Specifications and Plans for an item, the Work set forth in these Contract Documents shall be accomplished in accordance with the appropriate provisions and details of the State Standard Specifications and Standard Plans.

2.03. Clarification of Contract

A. The following interpretative rules apply throughout the Contract Documents:

1. The provisions of the Contract Documents are complementary and should be interpreted to view the Contract Documents as a whole.

2. A concept phrased in the singular should be interpreted in the plural as required.

3. Masculine includes feminine and feminine includes masculine.

4. The words “shall,” “will,” and “must” in any of their tenses indicate mandatory requirements. The word “may” indicates “may apply” or “may not apply.”

5. The use of examples (e.g., “such as” or “including”) does not limit or exclude examples not specifically mentioned.

6. The words “provide,” “furnish,” “perform,” “construct,” and “install” mean that the Contractor shall provide, perform, construct, and install and shall include all services necessary to provide, perform, construct, and install unless preceded by the word “only.”

B. The Contract Documents are not complete in every detail but show the purpose and intent only. The Contractor shall comply with their true intent and meaning, taken as a whole, and shall not avail itself of any manifest error, omission, discrepancy, or ambiguity that appears in the Contract Documents, instructions, or work performed by others.

C. All corrections of readily apparent errors or omissions in the Contract may be made by the Engineer when such corrections are necessary for the proper fulfillment of their intention as construed by the Engineer. The misplacement, addition, or omission of any word, letter, figure, or punctuation mark that has no substantive legal effect will in no way change the due spirit, intent, or meaning of these Specifications.

D. Any part of the Work not shown on the Drawings or described in these Specifications, but that is reasonably or ordinarily implied by either, shall be furnished and installed by the Contractor as if fully described in these Specifications and shown upon the Drawings.

E. **Contract Document Clarifications (CDC)**: A document initiated by the District consisting of supplementary details, instructions, or information issued by the District that clarifies or supplements the Contract Documents. Contract Document Clarifications do not constitute a change in Contract Work, Contract Price(s), or an extension in Contract Time(s) unless requested by the Contractor and approved by the District in accordance with the Contract Documents.

F. Payment for items of Work that are called for in the Specifications or that are shown on the Drawings but that are not separately identified in the Proposal Form, shall be compensated as part of the Bid price of one or more of the items that are listed; no additional payment shall be made.

2.04. Requests for Information

A. **Request for Information (RFI)**: A document prepared by the Contractor requesting information from the District regarding the Project or Contract Documents.

B. Contractor shall be responsible for its costs and the costs of its Subcontractors to review Contract Documents and field conditions and to implement and administer an RFI system throughout the Contract Time(s) in accordance with the requirements of the Contract. The Contractor shall be responsible for costs incurred by the District for the work of the District's consultants and District administrative efforts in answering Contractor RFIs where the answer could reasonably be found by reviewing the Contract Documents.

C. The Contractor shall carefully review the appropriate portions of the Contract Documents a minimum of 30 Days in advance of the Work to be executed for the express purposes of checking for manifest errors, omissions, discrepancies, or ambiguities. The Contractor shall not be entitled to any compensation for

Delays, disruptions, inefficiencies, or additional administrative effort caused by the Contractor's untimely review of the Contract Documents.

D. Should it appear that the Work to be done or any of the matters relative thereto are not sufficiently detailed or explained in the Specifications or on the Drawings, or if the Contractor discovers any discrepancies between the Contract Drawings and conditions in the field, or any errors or omissions in the Contract, or in the layout given by stakes, points, or instructions, the Contractor shall submit a written RFI to the Engineer. If the Contractor proceeds with any such Work without receiving such clarification or RFI reply, it shall be responsible for correcting all resulting damage and any nonconforming Work.

E. The Engineer will issue written clarification or interpretation of Contract Document requirements in response to the Contractor's requests and other sources of information. The Engineer's decision thereon shall be final; the Contractor shall conform to it as part of the Contract.

2.05. Examination of Drawings, Specifications, and Site of Work

A. As noted in the Notice to Bidders, the Contractor's submission of a Proposal is conclusive evidence that the Contractor investigated and is fully aware of the conditions and difficulties to be encountered of the character, quality, and quantities of work to be performed, the Material to be furnished, and the requirements of the Proposal, Drawings, Specifications, and other Contract Documents.

B. Where investigation of subsurface conditions has been made by the District in respect to foundation, characterization of soils, groundwater, or other design, Bidders may inspect the records of the District as to such investigation, including examination of samples and drill cores, if any. When logs of test boring showing a record of the data obtained by the District's investigation of subsurface conditions are made available, these logs represent only the opinion of the District as to the character of material encountered by it in its test borings and are made available only for the convenience of Bidders.

C. Note that the District's investigation of subsurface conditions is made for the purpose of design. The District assumes no responsibility whatsoever in respect to the sufficiency of test borings, or to accuracy of the log of test borings, or to other preliminary investigations, or of the interpretation thereof. There is no guarantee, expressed or implied, that the conditions indicated are representative of those existing throughout the Work, or to any part of it, or that unforeseen developments may not occur.

D. Making such information available to the Contractor is not to be construed in any way as a waiver of the provisions of this Article; Bidders must satisfy themselves through their own investigations, analyses, and interpretations as to conditions to be encountered.

E. No information derived from such inspection of records or from preliminary investigations made by the District, or from the Engineer, or from assistants, or from the maps, Specifications, profiles, or Drawings will in any way relieve the Contractor from any risk or from properly fulfilling all the terms of the Contract.

THIS PAGE INTENTIONALLY LEFT BLANK

SECTION 3. SCOPE OF WORK

3.01. Work to be Done

A. The performance by the Contractor of all of its responsibilities and obligations set forth in the Contract Documents. Work includes, but is not limited to, providing labor, Materials, Equipment, testing, services, and documentation required by the Contract Documents. References in the Contract Documents to "Work" may be to specific items of Work. All Work performed is to be in compliance with the Contract Documents.

B. During construction, the Contractor shall keep the worksite, areas adjacent to the worksite or otherwise impacted by the Contractor's operations and access roads in an orderly condition, free and clear of debris and discarded materials.

3.02. Engineer

A. The Engineer of the District shall be the District's representative who assumes all duties and responsibility and has all rights and authority as assigned in the Contract Documents.

B. The Engineer of the District is the Deputy Operating Officer or Assistant Operating Officer of the Water Utility Capital or Watershed Capital or Water Utility Technical Support Division or Office of Watersheds as applicable. Administrative hearings, if required, will be conducted by an Operating Officer of a different Division or Office.

C. Authority of Engineer: The Engineer shall decide all questions that may arise as to the quality or acceptability of Material furnished, Work performed, and rate of progress of the Work; all questions that may arise as to the interpretation of the Drawings and Specifications; and all questions as to the acceptable fulfillment of the Contract on the part of the Contractor. The Engineer's decisions shall be final. The Engineer has the authority to enforce these decisions and provide direction to the Contractor, which the Contractor shall carry out promptly.

3.03. Contractor Staffing

A. A project manager and superintendent shall be provided as specified below:

1. The Contractor shall submit for approval in writing before starting the Work the name of the project manager and superintendent who shall have complete authority to represent and act for the Contractor. This submittal shall also include a list of reference projects with the following information: (i) the individual's name; (ii) the project name that serves as the basis of qualification; (iii) the project site location; (iv) a brief project description; and (v) the name and mailing address of the project owner.

2. The project manager shall have at a minimum seven (7) years' experience as a contractor's project manager on public works with not less than four (4) years' experience as a project manager on projects with

complexity and configuration similar to the Work described in the Contract Documents.

3. The superintendent shall have at a minimum seven (7) years' experience as a contractor's general superintendent on public works with not less than four (4) years' experience as a superintendent on projects with complexity and configuration similar to the Work described in the Contract Documents.

4. The superintendent of the Contractor shall normally be present at the site of the Work at all times while Work is actually in progress on the Contract. During any period when Work is suspended, arrangements acceptable to the Engineer shall be made for any emergency Work that may be required to be done by the Contractor.

5. Whenever the Contractor or an authorized representative is not present on any part of the Work where it may be desired to give direction, orders will be given by the Engineer, which shall be received and obeyed by the superintendent who may have charge of the particular Work in reference to which the orders are given. Any order given by the Engineer not otherwise required by the Specifications to be in writing will, on the request of the Contractor, be given or be confirmed by the Engineer in writing.

6. If the project manager or superintendent is not deemed qualified or if the project manager's or superintendent's performance on the Work is determined to be unsatisfactory by the Engineer, the project manager or superintendent shall be immediately removed from the Project. The Contractor shall submit for approval the same information described in this article for a proposed substitute project manager or superintendent.

7. The Contractor shall designate, in writing, the names and telephone numbers of at least three (3) representatives who can be contacted at any time in the event that an emergency occurs.

B. A Professional Scheduler shall be provided unless removed in the Special Provisions. The Professional Scheduler shall meet the requirements specified in Article 5.04. Professional Scheduler. If Professional Scheduler is not required, the Contractor is responsible for providing adequate resources required to develop and to maintain schedules.

C. A Site Safety and Health Supervisor shall be provided unless removed in the Special Provisions. The Site Safety and Health Supervisor shall meet the requirements specified in Article 8.11. Site Safety and Health Supervisor.

D. A Field Quality Control Manager shall be provided if required in the Special Provisions. The Field Quality Control Manager shall meet the requirements specified in the Special Provisions Article 20.04.02. Contractor's Quality Staffing Requirements.

3.04. Character of Workers

A. Any Subcontractor or person employed by the Contractor or Subcontractor who fails or refuses to carry out the directions of the Engineer, or who appears to the Engineer to be incompetent, or who acts in a disorderly or improper manner shall be removed from the Work immediately on the written request of the Engineer; such person shall not again be employed on the Work.

3.05. Layout of Work and Surveys

3.05.01 Responsibility of District

A. The District shall establish survey control points and reference points as shown on the Drawings for required field layout by the Contractor.

B. The District shall provide only the minimum survey crew services essential for orderly performance of the Work; District survey crews will not be available at all times for the Work under these Specifications.

C. The District shall provide to the Contractor the station(s) and offset distance(s) to all reference points and benchmarks that were provided by the District in paragraph A.

D. The District shall establish required stakes only once. Survey stakes destroyed or removed will be replaced by the District at the Contractor's expense.

3.05.02. Responsibility of Contractor

A. When the Contractor requires stakes or marks as provided for in paragraph A, it shall clear and grub the area to be staked and then notify the Engineer of such requirements in a reasonable length of time in advance of starting operations that require such stakes or marks. In no event shall a notice of less than seven (7) Days be considered a reasonable length of time.

B. Where construction operations require removal of the District's stakes or other survey marks, the Contractor shall reference such points in an approved manner. Survey stakes or marks established by the District shall be preserved by the Contractor until their removal is authorized. In case of their unauthorized destruction or removal by the Contractor's forces, they will be replaced at the Contractor's expense. Any cost to the District of replacing survey stakes or marks will be deducted from payments due the Contractor. Such cost will include a reasonable charge for use of District supplies, labor, and Equipment, plus overhead.

C. The Contractor is solely responsible for the measurements and layout of the Project from the given survey control points and reference points provided by the District. Any questions with regard to interpretation of Project layout shall be resolved by the Engineer.

D. The Contractor shall not remove or disturb survey monuments and permanent markers unless otherwise approved by the Engineer and not until the District has recorded and referenced the locations. The Contractor shall be charged at a reasonable rate for the restoration or replacement of survey monuments and permanent markers by the District.

E. No survey monuments, permanent markers for the District right of way, or District survey control points shall be removed or disturbed until the Engineer has recorded the locations thereof and a permit for such removal has been received from the agency having jurisdiction. When the construction Work has been completed, the Contractor shall replace said monuments accurately in the locations as referenced by the Engineer at no cost to the District.

F. If any marker or monument is destroyed by the Contractor without prior written approval of the Engineer, the Contractor shall be responsible for the accurate replacement of that marker or monument at no expense to the District by a Land Surveyor licensed by the State of California in accordance with the California Business and Professions Code Chapter 15, Land Surveyors, Section 8771.

3.06. Changes in the Work

A. **Change Order**: A written document that changes the Contract and has been fully executed bilaterally by the District and Contractor that authorizes an addition, deletion, or revision in the Work; an adjustment in the Contract Price(s); and/or the Contract Time(s), including Milestone Completion dates or durations.

B. **Directed Change Order (DCO)**: The District's written order that is a Change Order unilaterally executed by the District to order additions, deletions, or revisions in the Contract Work. If deemed necessary and/or appropriate by the Engineer, the DCO will include an adjustment in the Contract Price(s) and/or in the Contract Time(s) and/or in other terms and conditions that the District, at its sole discretion, deems reasonable for the change.

C. **Potential Change Order (PCO)**: The District's written request to the Contractor for a proposal to perform PCO Work prior to the District's issuance of a Change Order or DCO. A PCO may also be created by the District to track disputed Work.

3.06.01. Potential Change Orders and Change Orders

A. The District may at any time, or from time to time and without notice to the Contractor's surety, order additions, deletions, or revisions to the Work and/or to the Contract Time(s) and may request a proposal from the Contractor for a PCO for such additions, deletions, or revisions in the Work and/or in the Contract Time(s). Pursuant to Articles 3.07. Change in Contract Price(s) and 3.08. Change in Contract Time(s), the Contractor shall submit any requests the Contractor has for adjustments in the Contract Price(s) and/or in the Contract Time(s).

B. Notwithstanding the time limits stated in Article 3.06.01. Potential Change Orders and Change Orders, upon receipt of such request, the Contractor shall furnish a detailed estimate of increase or decrease in costs and/or in time, together with cost and schedule breakdowns and other supporting data within the time specified in the request, but no later than 30 Days after receipt of such a request unless the Engineer allows additional response time. The Engineer shall review and respond in writing to the Contractor's estimate prior to proceeding with the Work.

C. Changes in the Contract Price(s) shall be determined and paid in accordance with Article 3.07. Change in Contract Price(s). Changes in the Contract Time(s) shall be determined and adjusted in accordance with Article 3.08. Change in Contract Time(s).

D. The District and the Contractor shall execute appropriate Change Orders covering:

1. changes in the Work that are ordered by the District pursuant to paragraph "A" above;

2. changes in the Contract Price(s) and/or Contract Time(s) that are agreed to by the parties; or

3. any other changes agreed to by the parties.

E. The Contractor shall not be entitled to an increase in the Contract Price(s) nor to an extension of the Contract Time(s) with respect to any Work performed that is not required by the Contract, except in the case of an emergency or in the case of uncovering Work as provided in Article 9.06.01. Inspection, paragraph H.

3.06.02. Change Order Request

A. Should the District's Contract Document Clarifications (CDC) or other written directive, in the opinion of Contractor, materially exceed or change the requirements of the Contract Documents, the Contractor shall submit to the District a written Change Order Request (COR) within seven (7) Days of receipt of the CDCs or of other written directive.

B. A COR shall reference the CDC or other written directive and the relevant Specifications and Drawings.

C. A COR shall also include a cost proposal and/or time adjustment proposal as a good faith estimate of any additional compensation or time associated with the affected Work.

D. Failure to submit a timely, documented COR shall constitute a waiver of any future claim for additional compensation or time relating to such Work.

3.06.03. Directed Change Orders

A. In situations where (i) the Contractor fails to submit a proposal for a PCO within the time specified; or (ii) when the District and the Contractor cannot agree on the terms and conditions of a PCO within a reasonable amount of time as determined by District; or (iii) if, in the judgment of the Engineer, it is impracticable because of the nature of the change or for any other reason for the parties to determine and agree on the costs and schedule impacts before the change must be performed, the District has the right to issue to the Contractor a DCO signed by the District only, with compensation based on the Engineer's estimate of cost, time, and other impacts associated with performance of changes in the Work.

B. A DCO may be issued by the District as a result of, but not limited to, any of the following conditions:

1. Responding to differing or unforeseen physical conditions under which the Work is to be performed as provided in Article 3.09. Differing Conditions.

2. Responding to any damage to improvements of property or to an emergency affecting the safety of life or property as provided in Article 4.10. Preservation of Property.

3. Utility relocation as provided in Article 4.25. Coordination With Utilities.

4. Emergency work as provided in Article 4.10. Preservation of Property and in the Special Provisions.

5. Protested Work under Article 3.11.01. Protest.

6. PCO work.

C. Upon receipt of a DCO, the Contractor shall immediately act upon the Work ordered by the District, all in accordance with the applicable terms and conditions of the Contract Documents.

D. The District's issuance of a DCO is for the purpose of unilaterally modifying the Contract Work, and/or Contract Price(s), and/or Contract Time(s), as deemed necessary by the Engineer. The parties may subsequently negotiate mutually acceptable terms and conditions of a Change Order to replace the DCO, as provided in this Article.

E. The Contractor may, at any time after the District's issuance of a DCO, furnish a detailed estimate of increases or decreases in costs and/or time, cost and schedule breakdowns, and references to relevant Contract Specifications in support of its position with regard to the unilateral directive.

F. Should the Contractor disagree with the terms of the DCO, the Contractor may protest in accordance with Article 3.11.01. Protest. This action shall not delay the requirement to immediately act upon the Work as provided herein.

3.06.04. Allowable Quantity Variations

A. General: Increases or decreases in the quantity of a Contract item of Work shall be determined by comparing the actual pay quantity of an item of Work with the approximate quantity in the listing of the Bid items contained in the Proposal.

1. If the actual pay quantity of an item of Work varies from the approximate quantity by 25 percent or less, payment shall be made for the actual quantity of Work performed at the Contract unit price listed in the Proposal.

2. If the actual pay quantity of an item of Work varies from the approximate quantity by more than 25 percent, in the absence of an executed Contract Change Order or DCO specifying the compensation to be paid, the compensation payable to the Contractor shall be determined in accordance with this Article.

a. Increases of More Than 25 Percent: If the actual pay quantity of an item of Work exceeds the approximate quantity by more than 25 percent, the amount of Work in excess of 125 percent of the approximate quantity may be paid for by adjusting the Contract unit price, subject to the following conditions: (i) the Contractor can demonstrate to the satisfaction of the Engineer that an adjustment in the Contract unit price is warranted; and (ii) the adjusted unit prices are reasonable and approved by the Engineer. Such adjustment of the Contract unit price shall be the positive or negative difference between the Contract unit price and the actual unit cost of the total pay quantity of the item. At the sole option of the Engineer, the actual unit cost of the Work involved in such excess shall be determined in accordance with Article 3.07.01.G.2. (by mutual acceptance of a lump sum) or with Article 3.07.02. Cost of Extra Work (based on Time and Materials); such unit costs shall include an appropriate portion of the Contractor's allowable overhead and profit.

(1) If the cost of an item of Work includes Fixed Costs, the Fixed Costs shall be deemed to have been recovered by the Contractor by the payments made for 125 percent of the approximate quantity at the Contract unit price for the item; in computing the actual unit cost, the Fixed Costs shall be excluded.

(2) When the compensation payable for the quantity of Work performed in excess of 125 percent of the approximate quantity is less than $5,000 at the Contract unit price, no adjustment in the Contract unit price shall be made unless

requested in writing by the Contractor within 14 Days from the date the Contractor became aware, or should have reasonably become aware, of the increase in quantity.

b. Decreases of More Than 25 Percent: If the actual pay quantity of an item of Work is less than 75 percent of the approximate quantity, an adjustment in unit price shall not be made unless the Contractor makes a request in writing within 14 Days from the date the Contractor became aware, or should have reasonably become aware, of the decrease in quantity. If the Contractor makes a request, the actual pay quantity of this item of Work performed may be paid for by adjusting the Contract unit price, subject to the following conditions: (i) the Contractor can demonstrate to the satisfaction of the Engineer that an adjustment in Contract unit price is warranted; and (ii) the adjusted unit prices are reasonable and approved by the Engineer. Such adjustment of the Contract unit price shall be the positive or negative difference between the Contract unit price and the actual unit cost of the total pay quantity of the item, including Fixed Costs. At the sole option of the Engineer, payment for the actual quantity of Work shall be made by mutual acceptance of a lump sum amount or cost of Work based on Time and Materials; such unit costs shall include an appropriate portion of the Contractor's allowable overhead and profit.

(1) Payment for the actual pay quantity of such item of Work shall in no case exceed the payment that would have been made for the performance of 75 percent of the approximate quantity of such item at the Contract unit price.

B. Eliminated Items: If any Contract item of the Work is eliminated in its entirety, the Contract Sum shall be reduced by the amount bid for that Bid item, including overhead and profit. Payment shall be made to the Contractor for the actual cost incurred in connection with the eliminated Contract item if incurred prior to the date of notification in writing by the Engineer of such elimination.

1. If acceptable Material is ordered by the Contractor for an eliminated Contract item prior to the date of notification of the elimination by the Engineer, and if orders for the Material cannot be canceled, payment for the Material shall be made at the actual cost to the Contractor. In this case, the Material shall become the property of the District. If the Material can be returned to the vendor and if the Engineer so directs, the Material shall be returned, and the Contractor shall be paid for the actual cost for returning the Material.
2. The actual costs to be paid by the District to the Contractor in accordance with this Article will be computed in accordance with Article 3.07.02. Cost of Extra Work, which shall include an allowance for overhead and profit.
3. In the event the Contractor and the District are unable to agree on the credit amount due, the District shall unilaterally determine the amount.

C. Supplemental Contract Items: Items noted as “Supplemental” in the Proposal may be deleted entirely or in part at the sole discretion of the District. The provisions of Articles associated with Allowable Quantity Variations or Eliminated Items shall not apply to Supplemental Contract Items.

3.07. Change in Contract Price(s)

3.07.01. General

A. The Contract Price(s) constitutes the total compensation payable to the Contractor for performing the Work. All duties, responsibilities, and obligations assigned to or undertaken by the Contractor to perform the Work shall be at the Contractor’s expense without a change in the Contract Price(s).

B. The Contract Price(s) shall only be changed by a fully executed Change Order or by a DCO. Any requests by the Contractor for an increase or decrease in the Contract Price(s) shall be based on a written Change Order Request (COR) delivered promptly by the Contractor to the Engineer by no later than seven (7) Days after the date of the occurrence of the event giving rise to the request and stating the general nature of the request, unless the time is modified in the Special Provisions.

C. The COR by the Contractor shall be substantiated within 30 Days after submittal of the written notice with a cost proposal quantifying the costs and schedule impacts associated with the request with supporting data, unless the Engineer allows an additional period of time for the Contractor to ascertain more accurate data in support of the request, or unless the time is modified in the Special Provisions.

D. No request by the Contractor for an adjustment in the Contract Price(s) shall be valid if not submitted timely in accordance with this Article; failure to submit a timely and fully documented request shall constitute a waiver of any future requests or Claims for additional compensation or a time extension related to such Work.

E. Any request for an adjustment in the Contract Price(s) and/or in the Contract Time(s) shall include, but shall not be limited to:

1. a written description of the event or issue or combination of events/issues that gave rise to the request, including and without limitation, the start date of the event or events and the anticipated or actual finish date;

2. a written description of the legal basis of the request with specific references to the Contract provisions upon which the Contractor relies;

3. an identification of the Work (e.g., activities with the current updated Detailed Progress Schedule and similar information) affected by the event(s);

4. relevant correspondence and other information related to and supporting entitlement;

5. written documentation pursuant to Article 3.07.02. Cost of Extra Work through 3.07.05. Compensation for Time Extension related to pricing of the requested change;

6. a written description of the effect of the request on the progress of the Work;

7. a detailed schedule analysis based on the most current Detailed Progress Schedule that identifies the critical and/or controlling portions of the Work impacted by the change and the anticipated dates of the impact;

8. the specific number of Days of time extension requested for any impacted Contract Time(s);

9. a written proposal for any additional compensation being requested that would fully compensate the Contractor for all costs of acceleration of the related Work needed to overcome the associated Delay, if any; and

10. a written statement from the Contractor that the proposed adjustment is the entire adjustment of the Contract Price(s) and/or of the Contract Time(s).

F. The Engineer shall review the Contractor's COR within 14 Days after receipt of the cost proposal and supporting documents, and render its determination in writing, unless the time is modified in the Special Provisions, Work, and Contract Time. If the Engineer requires a longer period for its determination, it will provide written notice to the Contractor within the initial 14-Day period. If the Engineer does not issue a determination within the initial or extended period, the request shall be deemed rejected and the provisions of Article 3.11. Disputes shall apply.

G. The value of any Work covered by a PCO, Change Order, DCO, or any request for an increase or decrease in the Contract Price(s) shall be determined in one of the following ways:

1. Where the Work involved is covered by unit prices contained in the Contract Documents, by application of unit prices to the quantities of the items involved; or

2. By mutual acceptance of a lump sum, which shall follow the basic pricing rules set forth under Article 3.07.02. Cost of Extra Work and include an allowance for overhead and profit in accordance with Article 3.07.02.G. Contractor's Fee; unless otherwise approved by the Engineer; or

3. On the basis of the cost of Work (determined as provided in Articles 3.07.02. Cost of Extra Work and in 3.07.04. Special Services) plus a Contractor's fee for overhead and profit (determined as provided in

Article 3.07.02. Cost of Extra Work). For this payment basis, the Engineer will direct the Contractor to proceed on a Time-and-Materials basis and may also establish a Not-to-Exceed (NTE) budget for the change.

3.07.02. Cost of Extra Work

A. The term "cost of extra Work" means the sum of all direct costs necessarily incurred and paid by the Contractor or estimated to be incurred and paid by the Contractor for labor, Materials, and Equipment in the proper performance of Work, plus a markup for overhead and profit as defined in this Article. Except as otherwise may be agreed to in writing by the District, such costs shall be in amounts no higher than those prevailing in the locality of the Project.

B. Labor: The direct cost of labor used in performing Work by the Contractor, a Subcontractor, or by other forces will be the sum of the following:

1. The actual or estimated wages paid plus any employer payments to or on behalf of workers for fringe benefits, including health and welfare, pension, vacation, and similar purposes.

2. There shall be added to the actual or estimated wages as defined above a percentage set forth in the latest "Labor Surcharge and Equipment Rental Rates" in use by the California State Department of Transportation, which is in effect on the date upon which the Work is accomplished. This percentage shall constitute full compensation for all payments imposed by State and Federal laws, including, but not limited to, workers' compensation insurance and Social Security payments.

3. The amount paid or estimated to be paid for subsistence and travel required by collective bargaining agreements.

4. For Equipment operators, payment for the actual or estimated cost of labor and subsistence or travel allowance shall be made at the rates paid, or estimated to be paid, by the Contractor to other workers operating similar Equipment already on the Work, or in the absence of such labor, established by collective bargaining agreements for the type of workers and location of the extra Work, whether or not the operator is actually covered by such an agreement. A labor surcharge shall be added to the cost of labor described herein in accordance with the provisions in this Article, which surcharge shall constitute full compensation for payments imposed by State and Federal laws, and all other payments made to on behalf of workers other than actual or estimated wages.

C. Materials: The direct cost of Materials used or to be used in performing Work shall be the actual or estimated cost to the purchaser, including sales tax, whether the Contractor or a Subcontractor, from the Supplier thereof, except as the following are applicable:

1. Trade discounts available to the purchaser shall be credited to the District notwithstanding that such discounts may not have been taken by the Contractor.

2. For Materials secured other than by a direct purchase and direct billing to the purchaser, the cost shall be deemed to be the price paid, or estimated to be paid, to the actual Supplier as determined by the Engineer. Markup, except for actual or estimated costs incurred in the handling of such Materials, shall not be allowed.

3. Payment for Materials from sources owned wholly or in part by the purchaser shall not exceed the price paid, or estimated to be paid, by the purchaser for similar Materials from said sources on extra Work items or the current wholesale price for such Materials delivered to the worksite, whichever price is lower.

4. The Contractor is responsible for and shall not be compensated for any increases in Material costs beyond those included in its Contract Price(s), including, but not limited to, sudden market changes or unexpected Material price increases.

5. If, in the opinion of the Engineer, the estimated or actual cost of Materials is excessive or the Contractor does not furnish satisfactory evidence of the cost of such Material, then the cost shall be deemed to be the lowest current wholesale price for the quantity concerned delivered to the worksite, less any trade discount. The District reserves the right to furnish Material for the extra Work; no Claim shall be made by the Contractor for costs and profit on such Material.

D. Equipment: The Contractor shall be paid for the use of Equipment at the rental rate listed for such Equipment specified in the current edition of the Department of Transportation publication entitled, *Labor Surcharge and Equipment Rental Rates*, which is in effect on the date upon which the Work is accomplished. Such rental rates shall be used to compute payments for Equipment whether the Equipment is under the Contractor's control through direct ownership, leasing, renting, or under another method of acquisition. The rental rate to be applied for use of each item of Equipment shall be the rate resulting in the least total cost to the District for the total period of use. If it is deemed necessary by the Contractor to use Equipment not listed in the foregoing publication, an equitable rental rate for the Equipment will be established by the Engineer. The Contractor shall furnish cost data, which might assist the Engineer in establishing the rental rate.

1. The rental rates paid, or estimated to be paid, as above provided shall include the cost of fuel, oil, lubrication supplies, small tools, necessary attachments, repairs, and maintenance of all kinds; depreciation, storage, insurance, and all incidentals, unless the Equipment is idle due to a Delay. Operators of Equipment will be separately paid for as provided in paragraph 4 of Article 3.07.02.B. Labor.

2. All Equipment shall be in good working condition and suitable for the purpose for which the Equipment is to be used.

3. Before construction Equipment is used on the extra Work, the Contractor shall plainly stencil or stamp an identifying number thereon at a conspicuous location and shall furnish to the Engineer, in duplicate, a description of the Equipment and its identifying number.

4. Unless otherwise specified, manufacturer ratings and manufacturer-approved modifications shall be used to classify Equipment to determine applicable rental rates. Equipment that has no direct power unit shall be powered by a unit of at least the minimum rating recommended by the manufacturer.

5. Individual pieces of Equipment or tools having a replacement value of $500 or less, whether or not consumed by use, shall be considered to be small tools; no payment shall be made.

6. Compensation for idle time of Equipment shall include the ownership costs only, not including operating costs, in accordance with the following:

   a. The Equipment rental rate shall be based on the delay factor in the edition of the Department of Transportation's publication entitled, *Labor Surcharge and Equipment Rental Rates*, in effect on the date the Work is accomplished.

   b. Daily number of payable hours equals the normal working hours during the delay, not to exceed eight (8) hours per Day or 40 hours per week.

   c. Delay Days exclude nonworking Days.

   d. Markups are not added.

E. Owner-Operated Equipment: When owner-operated Equipment is used, or anticipated to be used, to perform Work and is to be paid for as extra Work, the Contractor shall be paid for the Equipment and for the operator as follows:

1. Payment for the Equipment shall be made in accordance with the provisions in Contractor's Article 3.07.02.D. Equipment.

2. Payment for the cost of labor and subsistence or travel allowance shall be made at the rates paid, or estimated to be paid, by the Contractor to other workers operating similar Equipment already on the Project, or, in the absence of such other workers, at the rates for such labor established by collective bargaining agreement for the type of worker and location of the Work, whether or not the owner-operator is actually covered by such an agreement. A labor surcharge shall be added to the cost of labor

described herein in accordance with the provisions in paragraph 2 of Article 3.07.02.B. Labor.

3. Markup for Equipment rental and labor as provided in Article 3.07.02.G. Contractor's Fee shall be added to the direct cost of Equipment rental and labor, computed as provided herein.

F. Equipment Time: The rental time to be paid, or estimated to be paid, for Equipment on the Work shall be the time the Equipment is in productive operation on the Work being performed and shall include the time required to move the Equipment to the new location and return it to the original location or to another location, requiring no more time than that required to return it to its original location. Moving time shall not be paid if the Equipment is used on Work other than the extra Work. Loading and transporting costs shall be allowed, in lieu of moving time, when the Equipment is moved by means other than by its own power. No payment shall be made for loading and transporting costs when the Equipment is used at the site of the extra Work on other than the extra Work. The following shall be used in computing the rental time of Equipment on the Work:

1. When hourly rates are listed, any part of an hour less than 30 minutes of operation shall be considered to be a half hour of operation, and any part of an hour in excess of 30 minutes will be considered one (1) hour of operation.

2. When daily rates are listed, operation for any part of a day less than four (4) hours shall be considered to be a half Day of operation.

3. Rental time will not be allowed while Equipment is inoperative due to breakdowns or due to Contractor-caused Delays.

G. Contractor's Fee

a. Work ordered on the basis of Time and Materials or forward-priced lump sum will be paid for at the estimated or actual and necessary cost as determined by the Engineer, plus allowances for overhead and profit; said allowances shall constitute the Contractor's Fee. For extra Work involving a combination of increases and decreases in the Work, the estimated or actual and necessary cost will be the arithmetic sum of the additive and deductive costs.

b. To the total of the direct costs computed as provided above, there will be added a markup for overhead and profit as specified below. The markup shall constitute full compensation for all direct and indirect overhead costs and profit, which shall be deemed to include all items of expense not specifically listed above as direct costs. No separate allowance or itemization for overhead costs shall be allowed. The following list, though not intended to be comprehensive, indicates the types of costs that are

included in the markup for overhead and profit for all Change Orders, including Time-and-Material Work:

i. Field and home office personnel, including, but not limited to, principals, project managers, superintendents, supervisory foremen, estimators, project engineers, detailers, draftspersons, schedulers, consultants, watchpersons, payroll clerks, administrative assistants, and secretaries.

ii. All field and home office expenses, including, but not limited to, field trailers, parking, storage sheds, office equipment and supplies, telephone service at the Site, long-distance telephone calls, fax machines, computers and software, Internet and e-mail services, temporary utilities, sanitary facilities and services, janitorial services, small tools and Equipment with a cost under $500 each, portable scaffolding, blocking, shores, appliances, job vehicles, security and fencing, conformance to all regulatory requirements, including compliance with safety regulations, safety programs and meetings, cartage, warranties, record documents, and all related maintenance costs.

iii. Administrative functions, including, but not limited to, reviewing, coordinating, distributing, processing, posting, recording, estimating, negotiating, scheduling, schedule updating and revising, expediting, surveying, engineering, drawing, detailing, revising shop Drawings, preparing record Drawings, carting, cleaning, protecting the Work, and other incidental Work related to the Change Order.

iv. All other costs and taxes required to be paid, but not included under direct costs as defined in this Article.

c. The allowance for overhead and profit shall be made in accordance with the following schedule:

Element of the Work	**Overhead and Profit Allowance**
Labor	33 percent
Materials	15 percent
Equipment	15 percent

d. Subcontractor Markup: Labor, Materials, and Equipment may be furnished by the Contractor or by a Subcontractor on behalf of the Contractor. When all or any part of the extra Work is performed by a Subcontractor, the allowance specified in the above subparagraph “c” shall only be applied to the labor, Material, and Equipment costs of the Subcontractors to which the Contractor may add no more than five (5) percent of the Subcontractor’s total cost for the extra Work. In no case shall the sum of the individual markups applied to a Change Order

exceed ten (10) percent regardless of the number of Subcontractor tiers involved in performing the Work.

e. Bond and Insurance: Only the actual cost of bond and insurance premiums required because of the Change Order, with no markup for overhead and profit, will be allowed.

3.07.03. Time-and-Materials Work

A. If an NTE budget is established by the Engineer for Time-and-Material Work, the Contractor shall notify the Engineer when the cumulative costs incurred by the Contractor for Time-and-Material Work equal 80 percent of the preestablished budget. The Contractor may not be compensated for such Work that exceeds the NTE budget if the Contractor fails to provide the required notice before exceeding 80 percent of the established budget.

B. If Work being performed on a Time-and-Material basis is expected to take more than one (1) month, the Engineer may, in its sole discretion, issue an allowance Change Order to allow timely payment to the Contractor for undisputed Work performed. The dollar value of the Change Order shall be an allowance amount equal to or greater than the NTE. Any amount remaining after all Time-and-Materials sheets are priced shall revert to the District.

C. Cost of Work Documentation: For Time-and-Material Work, the Contractor shall furnish the Engineer extra work reports on a daily basis covering the direct costs of labor and Materials and charges for Equipment whether furnished by the Contractor, Subcontractor, or by other forces. The District shall provide the extra daily work report forms to the Contractor. The Contractor or an authorized agent shall sign each daily extra work report. The daily extra work report shall provide names and classifications of workers and hours worked; size, type, and identification number of Equipment; and the hours operated. Copies of certified payrolls and statements of fringe benefits shall substantiate labor charges. Valid copies of vendor invoices shall substantiate Material charges.

D. The Engineer shall make any necessary adjustments. When these reports are agreed upon and signed by both parties, they shall become the basis of payment for the undisputed Work performed but shall not preclude subsequent adjustment based on a later audit.

E. The Contractor shall inform the Engineer when extra Work will begin so that the District inspector can concur with the daily extra work reports. Failure to conform to these requirements may impact the Contractor's ability to receive proper compensation.

F. The Contractor shall price and submit to the Engineer in both electronic format and in hard copy a native Microsoft Excel-based cost summary of the daily extra work reports on no less than a weekly basis. This summary report shall total all costs incurred to date and compare them to the NTE amount with a percent-spent-to-date amount prominently displayed. The Contractor shall be fully

responsible for tracking the costs and for notifying the Engineer when the costs exceed 80 percent of the NTE value. The summary report shall not be considered a substitute for the notice required in this Section.

3.07.04. Special Services

A. Special services are defined as that Work characterized by extraordinary complexity, sophistication, or innovations, or a combination of the foregoing attributes that are unique to the construction industry. The following may be considered by the Engineer in reviewing or approving estimates for payment for special services:

1. When the Engineer and the Contractor, by agreement, determine that a special service is required that cannot be performed by the forces of the Contractor or by those of any of its Subcontractors, the special service shall be performed by an entity especially skilled in the Work to be performed. After validation of invoices and determination of market values by the Engineer, invoices for special services based upon the current fair market value thereof may be accepted without complete itemization of labor, Materials, and Equipment rental costs if backup provided is acceptable to the Engineer.

2. When the Contractor is required to perform Work necessitating special fabrication or machining process in a fabrication or a machine shop facility away from the job site, charges for that portion of the Work performed at the off-site facility may, by agreement, be accepted as a special service, and accordingly, invoices for the Work may be accepted without detailed itemization at the Engineer's discretion.

B. All invoices for special services shall be adjusted by deducting all trade discounts offered or available, whether the discounts were taken or not. In lieu of the allowances for overhead and profit on labor, Materials, and Equipment specified herein, a single allowance of ten (10) percent will be added to invoices for special services.

3.07.05. Compensation for Time Extensions

A. Adjustments in compensation for adjustments in Contract Time(s) shall be allowed only for causes in Article 3.08.01. Change in Contract Time(s), General, paragraphs "E.1." through "E.5." computed in accordance with Article 3.07.02. Cost of Extra Work. No adjustments in compensation shall be allowed when District-caused Delays to a Controlling Item of Work and Contractor-caused Delays to a Controlling Item of Work occur concurrently or for causes stated in Article 3.08. Change in Contract Time(s).

3.08. Change in Contract Time(s)

3.08.01. General

A. The Contract Time(s) for the Contract is specified in the Special Provisions. The Contract Time(s) shall only be changed or adjusted by a fully executed Change Order or by a DCO.

B. Notice and Substantiation: Any request for a change in the Contract Time(s) shall comply with the notice and substantiation requirements shown in Article 3.07. Change in Contract Price(s). No request for an adjustment in the Contract Time(s) will be valid if not submitted in accordance with the requirements of this Article.

C. The Contract Time(s) shall only be extended when a Delay occurs that impacts a Controlling Item of Work as shown in the most recently accepted Detailed Progress Schedule. Time extensions shall be allowed only if the cause is beyond the control and without the fault or negligence of the Contractor. Time extensions may also be allowed when District-caused delays to a Controlling Item of Work and Contractor-caused Delays to a Controlling Item of Work occur concurrently. The Contractor shall be notified if the Engineer determines that a time extension is not justified.

D. Types of Delays are defined below:

1. Compensable Delay: An Excusable Delay for which the Contractor is entitled to receive additional compensation for delay-related costs if a) the delay was caused by the District or within its control or responsibility; b) the Delay results in additional costs incurred by the Contractor; and c) the Contractor has not assumed the risk of the Delay.

2. Concurrent Delay: Two or more independent causes of Delay to the Contractor's performance of Work that meet all of the following criteria: a) the Delays occur at the same time during all or a portion of the delay period being considered; b) the Delays directly prevent the Contractor from performing a Controlling Item of Work; c) each Delay would have delayed the Contractor's performance of a Controlling Item of Work even in the absence of any of the other Delays;

3. Excusable Delay: A Delay to the completion of a specified Contract Time(s) that is due to causes that are unforeseeable and beyond the control and responsibility of the Contractor for which a time extension may be granted.

4. Inexcusable Delay: A Delay to the completion of a specified Contract Time(s) that was reasonably foreseeable or within the control and responsibility of the Contractor for which no compensation or time extension will be granted.

5. Non-compensable Delay: An Excusable Delay for which the Contractor may be entitled to an extension of time without additional compensation for delay-related costs.

E. The Contract Time(s) shall be extended in an amount equal to time lost due to Excusable Delays if a request is made thereof as provided in this Article. An extension in Contract Time(s) shall only be granted for Days on which the Contractor is prevented from proceeding with at least 75 percent of the normal labor and Equipment force actually engaged on the Work by occurrences or conditions resulting immediately therefrom that impact a Controlling Item of Work as determined by the Engineer. Causes of such Delays shall include:

1. changes;

2. failure of the District to furnish access, right of way, completed facilities of related projects, Drawings, Material, Equipment, or services for which the District is responsible;

3. survey error by the District;

4. suspension of Work pursuant to Article 5.06. Temporary Suspension of Work, paragraph C;

5. differing site conditions;

6. occurrences of a severe and unusual nature, including, but not limited to, acts of God, wars, riots, insurrections, fires, and excusable inclement weather. An “act of God” is defined as an earthquake, flood, cloudburst, cyclone, or other cataclysmic phenomena of nature beyond the power of the Contractor to foresee or to make preparation for in defense against, but does not include ordinary inclement weather; and

7. act of the public enemy, act of another governmental entity, act of a public utility or other third party outside the control of the District, epidemic, quarantine restriction, freight embargo, strike, or labor dispute. A delay to a Subcontractor or Supplier due to the above circumstances will be taken into consideration for extensions to the time of completion.

3.08.02. Inclement Weather

A. Inclement weather is any weather condition, the duration of which varies in excess of the average conditions expected, that is unusual for the particular time and place where the Work is to be performed or that could not have been reasonably anticipated by the Contractor as provided for in the Special Provisions.

B. The Contract Time(s) shall only be extended for Days in excess of the number of Days of inclement weather where the Contractor is prevented by inclement weather, or by conditions resulting immediately therefrom, from proceeding with

at least 75 percent of the normal labor and Equipment force engaged on Controlling Items of Work as shown on the current, updated, and accepted Detailed Progress Schedule.

C. Should the Contractor prepare to begin Work at the regular starting time at the beginning of any regular work shift on any Day on which inclement weather, or the conditions resulting from the weather, prevents Work from beginning at the usual starting time and the crew is dismissed as a result thereof, the Contractor shall be entitled to a one (1)-Day extension, whether or not conditions change thereafter during that Day and the major portion of the Day could be considered suitable for such construction operations.

D. The Contractor shall include a calendar in all of its Progress Schedules that includes nonworking Days for the number of inclement weather Days specified in the Special Provisions. This calendar shall be used for all weather-sensitive Work.

E. No extension in the Contract Time(s) due to inclement weather shall be considered until after the number of Days of inclement weather Days specified in the Special Provisions has been reached. No reduction in Contract Time(s) shall be made if the number of Days of inclement weather is not reached.

F. The Contractor shall not be entitled to additional compensation for Delays caused by inclement weather.

3.09. Differing Conditions

A. If any Work involves digging trenches or other excavations below the surface, the Contractor shall promptly, and before the following conditions are disturbed, notify the District in writing of any:

1. Material that the Contractor believes may be a Regulated Material that is required to be removed to a Class I, Class II, or Class III disposal site in accordance with provisions of existing law;

2. subsurface or latent physical conditions at the site differing from those indicated in this Contract (Type I Differing Site Condition); and

3. unknown physical conditions at the site of any unusual nature, different materially from those ordinarily encountered, and generally recognized as inherent in Work of the character provided for in the Contract (Type II Differing Site Condition).

B. The Contractor’s written notice shall inform the District as to how such conditions affect its Work and shall recommend methods to overcome such conditions.

C. Differing Conditions shall not include:

1. all that is indicated or reasonably interpreted from the Contract Documents or reference documents;

2. all that could be seen on the Project site;

3. conditions that are materially similar to or characteristically the same as those indicated or described in the Contract Documents or reference documents; and

4. conditions where the location of a building component is in the proximity where indicated in or reasonably interpreted from the Contract Documents or reference documents.

D. The District will promptly investigate the condition. If it finds that the conditions do materially so differ or do involve Regulated Material and cause a decrease or increase in the Contractor's cost of, or the time required for, performance of any part of the Work, the District may issue a Change Order or a DCO under the procedures described in this Contract. For Regulated Material, the District reserves the right to use other forces for exploratory work to identify and determine the extent of such material and for removing Regulated Material from such areas.

E. In the event that a dispute arises between the District and the Contractor on whether the conditions materially differ or on the Contractor's cost of, or time required for, performance of any part of the Work, the Contractor shall not be excused from any scheduled completion date provided for by this Contract but shall proceed with all Work to be performed under the Contract. The Contractor shall retain any and all rights provided either by this Contract or by law that pertain to the resolution of disputes and protests between the contracting parties.

F. The Contractor shall be responsible for the safety and protection of the affected area of the Work for the duration of the District's investigation of potential differing conditions.

3.10. Cost Reduction Incentive

A. The Contractor may submit to the Engineer, in writing, proposals for modifying the Drawings, Specifications, or other requirements of the Contract for the sole purpose of reducing the total cost of construction (known as value engineering change proposals) as provided for in State Specifications Section 4-1.07B wherein the words "State" and "Department" shall mean the District.

3.11. Disputes

A. Claim: A written demand by the Contractor for an adjustment in the Contract Price(s) or in the Contract Time(s), or both, that is submitted in accordance with the requirements of the Contract Documents. Within the context of this Contract, a Claim is associated with a dispute as described in Articles 3.11. Disputes through 3.13. Dispute Review Board.

B. It is the intention of this Article that disputes between parties arising under and by virtue of the Contract be brought to the attention of the Engineer at the earliest possible time in order that matters may be resolved, if possible, or other appropriate action promptly taken. Disputes are divided into four categories: (i) protest, (ii) notice, (iii) potential Claim, and (iv) Claim. During the course of the Project and up to receiving the proposed final estimate, the Contractor must submit a Contract dispute in the form of a written notice, protest, potential Claim, or Claim to the Engineer.

C. Any disputes from Subcontractors or Suppliers that the Contractor passes through to the District for review and consideration shall be certified in the same manner the Contractor would certify its own disputes.

3.11.01. Protest

A. If the Contractor considers any Work demanded to be outside of the requirements of the Contract, or considers any records or ruling or act or omission of the Engineer to be unfair, the Contractor shall immediately, upon such Work being demanded or such record or ruling being made, ask in writing for written instructions or decisions, whereupon the Contractor shall proceed without delay to perform the Work or to conform to the record or ruling and, within seven (7) Days after date of receipt of the written instructions or decisions, shall file a written protest with the Engineer stating clearly in detail the basis of the protest. Except for such protests as are made of record in the manner herein specified and within the time limit stated, the records, rulings, instructions, decisions, and acts or omissions of the Engineer shall be final and conclusive. Instructions and decisions of the Engineer contained in letters transmitting Drawings to the Contractor shall be considered as written instructions and decisions subject to protest as herein provided.

3.11.02. Notice of Potential Claims

A. The Contractor is not entitled to additional compensation for any cause unless the Contractor submits to the District a written Notice of Potential Claim as hereinafter specified.

B. The written Notice of Potential Claim must set forth the reasons for which the Contractor believes additional compensation and/or adjustments in the specified Contract Time(s) will or may be due, the nature of the costs and/or time involved, and, insofar as possible, the amount of the potential Claim. This notice as above required must have been submitted to the District before the Contractor performs the Work giving rise to the potential Claim for additional compensation and/or time, if based on an act or failure to act by the District, or in all other cases, within seven (7) Days after the happening of the event, thing, or occurrence giving rise to the potential Claim.

C. The Notice of Potential Claim shall be certified as required in Article 3.12. Claims.

D. Compliance with the foregoing shall not be a prerequisite to any Claim that is based on differences in measurement or errors of computations as to Contract quantities.

3.12. Claims

A. Claims by the Contractor must be submitted to the Engineer before the date of final payment. The Claim shall relate directly to the circumstances addressed in the Notice of Potential Claim and may not raise new issues or circumstances that were not identified in the Notice of Potential Claim. Claims shall be in writing, shall specify the basis for each Claim, shall refer to the applicable provision or provisions of the Contract, and shall show the method of computation and the actual amount claimed. The Claim shall include documents necessary to substantiate the Claim and to establish liability, causation, and damages. All other factual data, including documentation of actual costs pertaining to that Claim, shall be submitted. Each issue contained in a Claim must include documentation, including background, chronology, Contractor's position, supporting documentation of merit, supporting documentation of damages, schedules (if appropriate), and productivity exhibits (if appropriate). The Claim shall clearly state that it is a Claim being submitted under this Article. Failure to submit a written Claim within the 30-Day period waives any right to recover compensation or to an extension in the Contract Time(s) due to the issues referenced in the Notice of Potential Claim. In addition to the foregoing, to substantiate any Claim, the Contractor shall provide the information required by Article 3.07. Change in Contract Price(s).

B. Pricing of Claims shall be consistent and compliant with the requirements herein for adjustments in the Contract Price(s) and adjustments in the Contract Time(s).

C. Claims must be certified using the following language:

I,_____, BEING THE _____ (MUST BE AN OFFICER) OF_____ (CONTRACTOR), DECLARE UNDER PENALTY OF PERJURY UNDER THE LAWS OF THE STATE OF CALIFORNIA, AND DO PERSONALLY CERTIFY AND ATTEST THAT: I HAVE THOROUGHLY REVIEWED THE ATTACHED CLAIM FOR ADDITIONAL COMPENSATION AND/OR EXTENSION OF TIME FOR WORK PERFORMED BY THE CONTRACTOR AND/OR ANY SUBCONTRACTOR CLAIMS THAT ARE BEING PASSED THROUGH TO THE DISTRICT, AND KNOW ITS CONTENTS, AND SAID CLAIM IS TRUTHFUL AND ACCURATE; THAT THE AMOUNT REQUESTED ACCURATELY REFLECTS THE CONTRACT ADJUSTMENT FOR WHICH THE DISTRICT IS LIABLE; AND, FURTHER, THAT I HAVE REVIEWED AND AM FAMILIAR WITH BOTH CALIFORNIA PENAL CODE SECTION 72 AND CALIFORNIA GOVERNMENT CODE SECTION 12650, ET SEQ., PERTAINING TO FALSE CLAIMS, AND FURTHER KNOW AND UNDERSTAND THAT SUBMISSION OR CERTIFICATION OF A FALSE CLAIM MAY LEAD TO FINES, IMPRISONMENT, AND/OR OTHER SEVERE LEGAL CONSEQUENCES.

D. The District, or its authorized representatives, shall have access, upon reasonable notice during normal business hours, to Contractor and Subcontractor books, documents, and accounting records, including, but not limited to, Bid worksheets, Bids, Subcontractor Bids and proposals, estimates, cost accounting data, accounting records, payroll records, time sheets, canceled checks, profit and loss statements, balance sheets, Project correspondence, including, but not limited to, all correspondence between the Contractor and its sureties and Subcontractors/vendors, Project files, scheduling information, and other records of the Contractor and all Subcontractors directly or indirectly pertinent to the Work of the Project; original as well as changed and claimed extra Work to verify and evaluate the accuracy of cost and pricing data submitted with any Claim for which additional compensation has been requested or Notice of Potential Claim has been tendered. Such access shall include the right to examine and audit such records and make excerpts, transcriptions, and photocopies at the District's cost.

E. The parties agree that in the event the Contractor or any Subcontractor fails to comply with this Article, the Claim will not be considered by the District. The Contractor agrees to impose upon its Subcontractors by appropriate subcontract provisions the obligations of this Article of the Standard Provisions.

F. No Claim shall be considered where there has been a failure to comply with the requirements relative to protest and Notice of Potential Claim as written elsewhere in these Specifications.

G. The presentation of a Claim shall be an express condition precedent to the Contractor's recourse to (i) informal conference; (ii) nonbinding mediation; and (iii) judicial arbitration to resolve disputes on construction Claims of three hundred seventy-five thousand dollars ($375,000) or less or court action upon the Contract for Claims in excess of three hundred seventy-five thousand dollars ($375,000) in compliance with Public Contract Code Section 20104 et seq.

3.12.01. Claims Less Than Fifty Thousand Dollars

A. For Claims less than fifty thousand dollars ($50,000), the Engineer shall respond in writing to any written Claim within 45 Days of receipt of the Claim or may request in writing within 30 Days of receipt of the Claim any additional documentation supporting the Claim or relating to defenses or Claims the District may have against the Contractor.

B. If additional information is thereafter required, it shall be requested and provided pursuant to this Article upon mutual agreement of the Engineer and of the Contractor.

C. The Engineer's written response to the Claim, as further documented, shall be submitted to the Contractor within 15 Days after receipt of further documentation or within a period of time no greater than that taken by the Contractor in producing the additional information, whichever is greater.

3.12.02. Claims from Fifty Thousand Dollars to Three Hundred and Seventy-Five Thousand Dollars

A. For Claims greater than or equal to fifty thousand dollars ($50,000) and less than or equal to three hundred seventy-five thousand dollars ($375,000), the Engineer shall respond in writing to any written Claims within 60 Days of receipt of the Claim or may request in writing within 30 Days of receipt of the Claim any additional documentation supporting the Claim or relating to defenses or Claims the District may have against the Contractor.

B. If additional information is thereafter required, it shall be requested and provided pursuant to this Article upon mutual agreement of the Engineer and of the Contractor.

C. The Engineer's written response to the Claims, as further documented, shall be submitted to the Contractor within 30 Days after receipt of further documentation or within a period of time no greater than that taken by the Contractor in producing the additional information or requested documentation, whichever is greater.

3.12.03. Informal Conferences

A. If the Contractor disputes the Engineer's written response or if the Engineer fails to respond within the time prescribed, the Contractor may so notify the Engineer in writing either within 15 Days of receipt of the Engineer's response, or within 15 Days of the Engineer's failure to respond within the time prescribed respectively, and demand an informal conference to meet and confer for settlement of the issues in dispute. Upon such demand, the Engineer shall schedule a meet-and-confer conference within 30 Days for settlement of the dispute.

B. If, following the meet-and-confer conference, the Claim or any portion remains in dispute, the Contractor may file a Claim pursuant to California Government Code, Title 1, Division 3.6, Part 3, Chapter 1 commencing with Section 900 and Chapter 2 commencing with Section 910. For purposes of those provisions, the running of the period of time within which a Claim must be filed shall be tolled from the time the Contractor submits its written Claim until the time the Claim is denied, including any period of time utilized by the meet-and-confer process conference.

3.12.04. Civil Actions

A. The following procedures are established for all civil actions filed to resolve Claims:

1. Within 60 Days, but no earlier than 30 Days, following the filing or responsive pleadings, the court shall submit the matter to nonbinding mediation unless waived by mutual stipulation of both parties. The mediation process shall provide for the selection within 15 Days by both

parties of a disinterested third person as mediator, shall be commenced within 30 Days of the submittal, and shall be concluded within 15 Days from the commencement of the mediation unless a time requirement is extended upon a good-cause showing to the court.

2. If the matter remains in dispute, the parties agree to resolve their dispute by binding judicial arbitration pursuant to the Local Civil Rules of the County of Santa Clara Superior Court; notwithstanding, anything in such Local Civil Rules, the parties agree that the Civil Discovery Act of 1986 (Code of Civil Procedure, Title 3, Part 4, Chapter 3, Article 3 commencing with Section 2016 of Chapter 3 of Title 3 of Part 4 of Code of Civil Procedure) shall apply to any proceeding brought under this subdivision.

B. In addition to the Code of Civil Procedure, Part 3, Title 3, Chapter 2.5 commencing with Section 1141.10, (i) arbitrators shall, when possible, be experienced in construction law; and (ii) any party appealing an arbitration award who does not obtain a more favorable judgment shall, in addition to payment of costs and fees under that chapter, also pay the attorney's fees on appeal of the other party.

3.13. Dispute Review Board

A. When specified in the Special Provisions that a Dispute Review Board (DRB) process is required, the DRB process shall be in accordance with these Specification Provisions.

3.13.01. General

A. A DRB is to assist in and facilitate the avoidance and timely, impartial resolution of disputes.

B. All disputes referred to the DRB shall be subject to the dispute resolution process herein described as a condition precedent to initiating a subsequent dispute resolution process, such as arbitration or litigation, for that dispute.

C. Except as explicitly otherwise provided, all disputes that are actionable under the provisions of the prime Contract between the District and the Contractor may be referred to the DRB.

D. The DRB shall be utilized when dispute or potential Claim resolution at the Project level is unsuccessful. The DRB shall function until the Day of Acceptance of the Work by the District Board of Directors, at which time the work of the DRB will cease except for completion of unfinished dispute hearings and reports.

E. The Contractor shall include in all subcontracts that Subcontractors and Suppliers of any tier (i) agree to submit Subcontractor Claims to the Contractor in a proper form and in sufficient time to allow processing by the Contractor in conformance with the DRB resolution specifications; (ii) agree to be bound by the

terms of the DRB provisions to the extent applicable to Subcontractor Claims; (iii) agree that, to the extent a Subcontractor Claim is involved, completion of all steps required under these DRB Special Provisions shall be a condition precedent to pursuit by the Subcontractor of other remedies permitted by law, including without limitation of a lawsuit against the Contractor; and (iv) agree that the existence of a dispute resolution process for disputes involving Subcontractor Claims shall not be deemed to create any Claim, right, or cause of action by any Subcontractor or Supplier against the District.

F. The DRB reports shall not be binding on the District or on the Contractor and shall be admissible in subsequent dispute resolution proceedings.

G. Immediately after award of the Contract, the District and the Contractor shall meet and discuss and establish the qualifications upon which nominees for the DRB are to be evaluated and jointly select prospective nominees.

H. The District, the Contractor, and the DRB shall execute an agreement similar to the Three Party Agreement form included as an appendix to these Specifications. If there are any conflicts between the provisions of that agreement and these Specifications, the provisions of that agreement shall take precedence.

I. The District and the Contractor shall each bear their respective in-house costs and costs of providing those DRB-related services for which responsibility has been allocated herein. The cost of the DRB panelists shall be split evenly between the Contractor and the District in the manner as described in paragraph "J" in this Article.

J. The Contractor shall pay the full amount of any invoice or costs incurred from the DRB members in accordance with and as set forth in the DRB agreement and in these Specifications. The Contractor shall be reimbursed for 50 percent of these services utilizing the DRB Bid item, or Contract Change Order if no Bid item is specified.

3.13.02. DRB Qualifications

A. Board members shall be experienced in the interpretation of Contract Documents and the resolution of construction disputes and in the type of construction to be performed.

B. The following definitions apply for the purpose of setting forth experience and disclosure requirements.

1. Party directly involved: The District or the Contractor of this Project.

2. Contractor includes all joint-venture partners individually.

3. Party indirectly involved: The construction manager, designers, architects, engineers, or other professional service firms or consultants,

joint-venture partners, Subcontractors of any tier, and Suppliers on this Project.

4. Financial ties: Any ownership interest, loans, receivables, or payables.

C. Eligibility

1. Direct Employment

a. Current employees of any of the parties directly or indirectly involved are prohibited from serving as Board members.

b. Prospective Board members who were past employees of one of the parties directly involved must obtain permission from the other party prior to appointment.

c. Previous, direct employment by one of the parties indirectly involved must be disclosed.

2. Consulting Assignments

a. Individuals who are employed in a consulting capacity by any of the parties directly involved are prohibited from serving as Board members.

b. Prospective Board members who are currently employed as a consultant by one of the parties indirectly involved must obtain permission from the other party prior to appointment.

c. Previous employment as a consultant by any party directly or indirectly involved must be disclosed.

3. Financial Ties

a. Individuals with financial ties to any of the parties directly involved are prohibited from serving as Board members.

b. Current financial ties to any of the parties indirectly involved must be disclosed.

c. Previous financial ties with any party directly or indirectly involved must be disclosed.

4. Close Personal or Professional Relationships

a. Individuals with close personal or professional relationships with a key member of any party directly involved are prohibited from serving as Board members.

b. Such current relationships with a member of any party indirectly involved in the Contract must be disclosed.

c. All past personal or professional relationships with a key member of one of the parties directly or indirectly involved must be disclosed.

5. All past and current service as a Board member on projects where any of the parties directly or indirectly involved in this Contract were also involved must be disclosed.

6. No member shall have had substantial prior involvement in the Project in the judgment of the District and the Contractor.

7. Ongoing Responsibilities: While serving as a Board member on the DRB, no member shall participate in any discussion contemplating the creation of an agreement or making an agreement with any party directly or indirectly involved in the Contract regarding employment, or fee-based consulting services, or any other business arrangement after the Contract is completed.

3.13.03. Establishment of the DRB

A. The District and the Contractor shall jointly participate in the evaluation and selection of prospective nominees for the DRB.

B. The District and the Contractor shall provide to the DRB nominees a list of the construction manager, designers, architects, engineers, professional service firms, consultants, joint-venture partners, Subcontractors, and Suppliers involved or likely to be involved in the Project with a list of each party's key personnel.

C. DRB nominees shall provide the following, pursuant to the above requirements and in addition to the nominee's full name and contact information, to both parties:

1. Résumé showing construction experience qualifying the person as a DRB member.

2. Résumé showing past DRB participation, if any. List each DRB assignment separately, indicating the name and location of the Project, dates of DRB service, name of owner, name of contractor, Contract value, nominating party, if applicable, names of the other Board members, and the number of disputes heard.

3. Disclosure statement describing past, present, and anticipated relationships, including indirect relationships through the nominee's full-time employer, if any, to the Project, with all parties directly and indirectly involved in the Contract. Disclose close professional or personal relationships with key members of all of these parties.

4. Disclosure is a continuing obligation of all Board members throughout the life of the Contract.

D. The District and the Contractor shall then have three (3) weeks to solicit and receive information from prospective candidates, and another two (2) weeks to review and to jointly agree on the final selection of the three (3) members to serve on the DRB. In the event that all three (3) members were not selected from the initial pool of nominees, the process shall be repeated.

E. If the DRB Chair has not already been appointed as part of the selection process, as soon as is practicable, the Board members shall nominate the Chair and submit the nominee's résumé and request approval by the District and by the Contractor.

3.13.04. DRB Meetings

A. The DRB shall visit the Project site and meet with representatives of the parties at periodic intervals and at other times requested by the parties.

B. Each meeting shall consist of an informal discussion and a field observation of the Work in progress. The discussion and field observation shall be attended by personnel of the District and by the Contractor.

3.13.05. Dispute Resolution

A. Prior Good-Faith Negotiation

1. The District and the Contractor shall enter into good-faith negotiations to settle a dispute before referring the dispute to the DRB.

2. These good-faith negotiations shall be founded on the principle of full and timely disclosure of each party's position to the other party, including the exchange of pertinent supporting records, analyses, expert reports, and similar documentation, and shall proceed without delay following the inception of the dispute. Such good-faith negotiations may involve the solicitation and rendering of a DRB advisory opinion as described herein.

B. Dispute Referral

1. A dispute may be referred to the DRB by either the District or by the Contractor. The dispute referral shall be made in writing to the DRB Chair with a copy concurrently provided to the other Board members and to the other party.

2. If the Contract stipulates a precedent dispute resolution process prior to referral to the DRB and if one party fails to meet or adhere to the time requirements set forth under the Contract for this process, the other party may then refer the dispute to the DRB. In the event that the Contract does not specify a precedent process or specifies a precedent process

without time requirements, either party may refer the dispute to the DRB after passage of a reasonable period of time without progress toward a negotiated settlement; the DRB will determine if the dispute should be heard.

3. The dispute referral shall concisely define the nature and specifics of the dispute that are to be considered by the DRB and the scope of the recommendation requested.

4. The DRB Chair shall confer with the parties to establish a due date for delivering pre-hearing submittals, and a date, time, and location for convening the DRB hearing. Hearings shall be convened at the next periodic meeting, unless the parties agree to a shorter or longer period.

C. Pre-hearing Submittal

1. The District and the Contractor shall each prepare a pre-hearing submittal and transmit it to all three (3) members of the DRB and to the other party. The pre-hearing submittal, comprised of a position paper with such backup data as is referenced in the position paper, shall be tabbed, indexed, and the pages consecutively numbered.

2. Both position papers shall, at a minimum, contain the following:

   a. A joint statement of the dispute and the scope of the desired report placed in a prominent location. The language of this joint statement shall summarize in a few sentences the nature of the dispute. If the parties are unable to agree on the wording of the joint statement of dispute, each party's position paper shall contain both statements and identify the party authoring each statement.

   b. The basis and justification for the party's position with reference to Contract language and other supporting documents for each element of the dispute. To minimize duplication and repetitiveness, the parties may identify a common set of documents that will be referred to by both parties and submit it in a separate package.

   c. When the scope of the hearing includes quantum, the referring party shall include a schedule impact analysis and full cost details, calculated in accordance with methods set forth in the Contract. This requirement does not apply if the report is to be made for entitlement alone or for entitlement with guidelines for quantum.

3. The number of copies, distribution requirements, and time for submittal will be established by the DRB and communicated to the parties by the Chair.

D. DRB Hearings

1. The District will arrange for or will provide hearing facilities at or near the site.

2. Attendance

   a. The District and Contractor shall both limit attendance at the hearing to personnel directly involved in the dispute and participants in the good-faith negotiations that were conducted prior to submittal to the DRB except as noted below.

   b. Prior to the date established for the hearing, each party shall provide a list of proposed attendees to the DRB and to the other party. In the event of any disagreement, the DRB shall make the final determination as to who attends the hearing.

   c. Attorneys shall not participate in the hearing. Attorneys representing the parties are permitted to attend dispute hearings provided that prior permission is obtained from the other party.

   d. At DRB hearings regarding Claims by a Subcontractor, including pass-through Claims by a lower tier Subcontractor or Supplier against the Contractor that are actionable by the Contractor against the District, the Contractor shall require and ensure that each Subcontractor involved in the dispute has presented an authorized representative with actual knowledge of the facts underlying the Subcontractor Claims.

3. The conduct of the hearing shall be established by the DRB according to its operating procedures and be generally consistent with the following guidelines:

   a. The party who referred the dispute to the DRB shall present its position first, followed by the other party.

   b. Both parties shall be allowed successive rebuttals, assuring a full and adequate opportunity to present their position, and to rebut the opposing party's position, until, in the DRB's opinion, all aspects of the dispute have been fully and fairly covered.

   c. The DRB shall be fully prepared to, and may at any time, ask questions, request clarifications, or ask for additional data and/or for job records.

   d. Either party may request that the DRB direct a question to or request a clarification from the other party. The DRB shall determine at what point in the proceedings such requests may be

made and if they will be granted. In general, the DRB will not allow one party to be questioned directly by the other party.

e. In difficult or complex cases, additional hearings may be necessary to facilitate full consideration and understanding of the dispute.

f. The DRB, in its discretion, may allow introduction of arguments, exhibits, handouts, or documentary evidence that were not included in that party's pre-hearing position paper and that had not been previously submitted to the other party. In such cases, the other party will be granted time to review and prepare a rebuttal to the new material.

E. Failure to Prepare a Pre-hearing Submittal or Attend a DRB Hearing

1. In the event that either party fails to deliver a pre-hearing submittal by the date established by the DRB, the DRB shall, at its discretion, determine whether the hearing shall proceed as originally scheduled or whether additional time shall be provided and a new date established. On the final date and time established for the hearing, the DRB shall proceed with the hearing utilizing the information that has been submitted.

2. In the event that some or all of the representatives of either party fail to appear at the appointed time of a DRB hearing, the DRB shall proceed with the hearing. The hearing shall take place as if all party representatives were in attendance. The DRB shall consider all evidence brought before it and hear testimony from those party representatives who are present.

F. Use of Outside Experts

1. By the District or by the Contractor

a. A party intending to offer an outside expert's analysis at the hearing shall disclose such intention in writing to the other party and to the DRB no less than 30 Days prior to the due date for delivering the pre-hearing submittal. The expert's name and a general statement of the area of the dispute that will be covered by his/her testimony shall be included in the disclosure.

b. Upon receipt of the above disclosure, the other party shall have the opportunity to secure the services of an outside expert to address or respond to those issues that may be raised by the other party's outside expert. The disclosure requirements shall be the same as that specified above, except the time requirement is ten (10) Days.

c. The cost for securing outside expert services shall be borne by the party securing such services.

2. By the DRB

a. Prior to arranging for outside experts, the DRB shall obtain prior approval from the District and from the Contractor by providing:

1. A statement explaining why the expert assistance is needed.

2. An estimate of the cost of the expert assistance.

3. A disclosure statement in accordance with the requirements of Article 3.13.03. Establishment of the DRB herein using the criteria established in Article 3.13.02. DRB Qualifications.

4. A confidentiality statement, consistent with the DRB's agreement, executed by the proposed expert.

5. The Contractor and the District shall equally bear the cost of the services of the outside expert employed by the DRB.

G. DRB Report

1. The DRB's recommendations for resolution of a dispute will be formalized in a written report with a format as determined by the DRB and signed by all Board members. The report should consist of a concise description of the dispute, short statements of each party's position, findings as to the facts of the dispute, discussion and rationale for the recommendation(s), and the recommendation(s). The report shall be submitted concurrently to the parties as soon as possible after completion of the hearing as agreed by all parties.

2. If the DRB cannot arrive at a unanimous report, the Board shall prepare minority findings and recommendation(s), which, together with the majority findings and recommendation(s), shall comprise the DRB report. The report shall identify the issues of disagreement along with the reasons for disagreement.

3. Clarification

a. Either party may request clarification of a report within ten (10) Days following receipt of the report. Within a reasonable period of time, the DRB shall provide written clarification to both parties.

b. Requests for clarification shall be submitted in writing simultaneously to the DRB and to the other party.

c. Only one request for clarification per dispute from each party shall be allowed.

4. Reconsideration

a. Either party may request reconsideration of a report within ten (10) Days following receipt of the report when new information is obtained or developed that was not known at the time of the hearing, or when, in the party's opinion, the DRB misunderstood or failed to consider pertinent facts of the dispute. Within a reasonable period of time, the DRB shall provide written reconsideration to both parties.

b. Requests for reconsideration shall be submitted in writing simultaneously to the DRB and to the other party.

c. The Board will not entertain requests for reconsideration that amount to a renewal of a prior argument or an additional argument based on facts available at the time of the hearing.

d. Only one request for reconsideration per dispute from each party shall be allowed.

5. Acceptance

a. The District and the Contractor shall submit their written acceptance or rejection of the report concurrently to the other party and to the DRB within 14 Days of receipt of the report or following receipt of responses to requests for clarification or reconsideration.

b. Failure by either party to accept or reject within the specified period shall be construed as acceptance of the report by that party.

c. Acceptance by the District of a report on entitlement only, or on entitlement with guidelines for quantum, does not obligate the District to any particular quantum amount.

H. Advisory Opinions

1. An advisory opinion serves as a method for potentially avoiding a DRB hearing. It is not intended to replace the dispute resolution process specified herein but may be implemented as part of the good-faith negotiations conducted between the parties.

2. When mutually agreed to by the District and by the Contractor, the DRB may, at its discretion, provide an advisory opinion on any issue.

3.14 Escrow Bid Documents

A. When required by the Special Provisions, Escrow Bid Documents shall be prepared and submitted as specified herein.

3.14.01. Introduction

A. The Escrow Bid Documents shall include complete documentation of all backup information used in the preparation of the Contractor's Bid prices for this Project as described below. The Escrow Bid Documents of the successful Bidder will be held in escrow for the duration of the Contract or until all Claims are resolved, whichever is later.

B. The Escrow Bid Documents are, and shall always remain, the property of the Contractor, subject to joint review by the District and by the Contractor as provided herein.

C. The District stipulates and expressly acknowledges that the Escrow Bid Documents, as defined herein, constitute trade secrets.

1. This acknowledgement is based on the District's express understanding that the information contained in the Escrow Bid Documents is not known outside the Bidder's business, is known only to a limited extent and by a limited number of employees of the Bidder, is safeguarded while in the Bidder's possession, and is extremely valuable to the Bidder's competitors by virtue of its reflecting Bidder's construction strategies, assumptions, and intended means, methods, and techniques of construction.

2. The District acknowledges that the Bidder expended substantial sums of money in developing the information included in the Escrow Bid Documents and further acknowledges that it would be difficult for a competitor to replicate the information contained therein.

3. The District further acknowledges that the Escrow Bid Documents and the information contained therein are being provided to the District only because it is an express prerequisite to award of the Contract.

4. The District further acknowledges that the Escrow Bid Documents include a compilation of information used in the Bidder's business intended to give the Bidder an opportunity to obtain an advantage over competitors who do not know or do not use the contents of such information.

5. The District further agrees, to the fullest extent permitted by law, to safeguard the Escrow Bid Documents against disclosure and not provide as public records.

D. The successful Bidder agrees, as a condition of award of the Contract, that the Escrow Bid Documents constitute all of the information used in the preparation of its Bid for this Work and that no other Bid preparation information shall be considered in resolving disputes or Claims. The successful Bidder also agrees that nothing in the Escrow Bid Documents shall change or modify the terms or conditions of the Contract Documents.

3.14.02. Purpose

A. The Escrow Bid Documents will be used solely to assist in the settlement of disputes and Claims. They will not be used for pre-award evaluation of the Contractor's anticipated methods of construction nor to assess the Contractor's qualifications for performing the Work.

3.14.03. Format and Contents

A. The Bidders may submit the Escrow Bid Documents in their usual cost estimating format; a standard format is not required. However, sufficient detail shall be included to ensure that the Escrow Bid Documents enable complete understanding and proper interpretation of their content.

B. The Escrow Bid Documents shall clearly itemize and separate the estimated cost of performing each major activity for each Bid item contained in the Bid. Bid items should be separated into sub-items to present a detailed cost estimate. Crews, Equipment, estimated quantities, and the rate of production shall be detailed. Increments of cost shall include, but shall not be limited to, such items as direct labor, permanent Material, supplies, consumables, subcontracts, Equipment charges, and allocation of overhead and profit. Plant, Equipment, and indirect costs should be detailed. All costs included in the Bid prices must be specifically identified and the methods of application described.

C. The Escrow Bid Documents shall include all quantity takeoffs; calculations of rates of production and progress; copies of quotes from Subcontractors and Suppliers; and memoranda, narratives, and all other information used by the Bidder to arrive at the prices contained in its Bid.

3.14.04. Submittal

A. The Escrow Bid Documents shall be submitted by the three (3) apparent low Bidders in a sealed container separate from their proposal no later than 5 p.m. on the second business day following the Bid opening Day. Each container shall be clearly marked on the outside with the Bidder's name, date of submittal, Project name, and the words “Escrow Bid Documents.” Timely submission of these forms is considered material by the District.

B. The Escrow Bid Documents shall be accompanied by a separate certification, “Bid Form 10 – Escrow Bid Documents Certification of Completeness,” signed by an individual authorized by the Bidder to execute the bidding proposal and stating that the material in the Escrow Bid Documents constitutes all of the

documentary information used in preparation of this Bid, and that the Bidder's authorized individual has personally examined the contents of the Escrow Bid Documents container and has found that the documents in the container are complete.

C. The Escrow Bid Documents of the apparent successful Bidder will be opened and examined by an appointed member of the District in the presence of the Bidder before the Contract is awarded. The apparent successful Bidder and applicable Subcontractors as stated in paragraph "G" in this Article shall attend this examination.

D. This examination is to ensure that the Escrow Bid Documents are legible and complete. It will not include a review of, or constitute approval of, proposed construction methods, estimating assumptions, or interpretations of the Contract Documents. The examination will not alter any condition or term of the Contract. Should the examination indicate that any data is incomplete or missing, the Bidder shall supply the missing information within 24 hours or at such other time as is mutually agreeable.

E. The timely submittal of complete Escrow Bid Documents is an essential element of the bidding process and a prerequisite to Contract award. Failure to provide the necessary Escrow Bid Documents will be sufficient cause for the District to reject the Bid as nonresponsive.

F. If the Contract is not awarded to the apparent successful Bidder, the Escrow Bid Documents of the Bidder next to be considered for award shall be processed as described above. The Escrow Bid Documents of unsuccessful Bidders will be held in escrow until such time that they are returned unopened upon execution of the Contract by the successful Bidder.

G. If any Bidder's proposal is based upon subcontracting any part of the work, each Subcontractor whose total subcontract price exceeds the percentage of the total Bid price specified in the Special Provisions shall provide separate Escrow Bid Documents to be included with those of the Bidder. Such documents shall be opened and reviewed in the presence of the Subcontractor only in the same manner and at the same time as the review described above for the apparent successful Bidder.

H. It is the District's policy, in accordance with State law, that new Subcontractors are not accepted after award. However, if the Contractor wishes to lawfully change a Subcontractor or lawfully issue an additional subcontract for any portion of the Work after award and the District grants a specific exception to this policy, the District retains the right to require that the new Subcontractor submit Escrow Bid Documents before the new subcontract is approved.

3.14.05. Storage

A. Upon completion of the examination, receipt of the apparent successful Bidder's Escrow Bid Documents will be acknowledged in writing by the District. The

documents will be placed in escrow for the life of the Contract at an escrow firm within the greater Santa Clara County area chosen by the District. The District will pay for storage and maintenance of the Escrow Bid Documents.

3.14.06. Examination

A. The Escrow Bid Documents may be examined at any time deemed necessary by either the District or by the Contractor to assist in settling disputes and Claims.

B. An examination of the Escrow Bid Documents is subject to the following conditions:

1. As trade secrets, Escrow Bid Documents are proprietary and confidential.

2. The District and the Contractor (and any Subcontractor to the extent Escrow Bid Documents are required by a Subcontractor) shall each designate in writing to the other party seven (7) Days prior to any examination representatives who are authorized to examine the Escrow Bid Documents. With the consent of both the District and the Contractor, members of the DRB may participate in the examination of the Escrow Bid Documents. No other person shall have access to the Escrow Bid Documents.

3. Access to the Escrow Bid Documents may take place only in the presence of a duly designated representative of both the District and the Contractor. If the Contractor fails to designate a representative or fails to appear for joint examination on seven (7) Days' notice, then the District representative may examine the Escrow Bid Documents upon an additional three (3) Days' notice.

3.14.07. Final Deposition

A. The Escrow Bid Documents will be returned to the Contractor after the Work has been completed and accepted and after all Claims and disputes involving this Work have been settled. The Contractor will thereupon be required to waive, in writing, any right to lodge further Claims involving this Work.

3.15. Partnering

3.15.01. Partnering Relationship

A. The District encourages a partnering relationship with the Contractor to effectively complete the Contract to the benefit of both parties. The purpose of this relationship will be to maintain cooperative communication and to mutually resolve conflicts at the lowest possible management level.

3.15.02. Professionally Facilitated Project Partnering

A. To further the partnering relationship, Professionally Facilitated Project Partnering can be implemented by one of two methods:

1. The District requires Professionally Facilitated Project Partnering. The Contractor shall comply with the Special Provisions regarding this requirement.

2. The Contractor submits a written request for Professionally Facilitated Project Partnering. However, this method can only be implemented if the Engineer approves the request in writing.

B. Implementation of Professionally Facilitated Project Partnering

1. Scheduling the Professionally Facilitated Project Partnering workshops, selecting the Professional Partnering Facilitator and workshop site, and other administrative details shall be as agreed to by both parties.

2. Partnering workshops will be held on a quarterly basis during construction, or as needed, and as determined by the Engineer and by the Contractor. Both parties will determine workshop attendees, agenda, and duration. Persons required to be in attendance will be the Engineer and/or the Engineer's authorized agents and key Project personnel; the Contractor's authorized representative, on-site Project manager, and key Project supervision personnel of both the prime and principal Subcontractors and Suppliers; and other personnel as deemed necessary by the District and by the Contractor.

3. The Contractor shall secure the Professional Partnering Facilitator and the off-site meeting room. The District will pay in full for the services of a Professional Partnering Facilitator and for the off-site meeting room based on invoices priced without markup. Payment for these services shall be made utilizing the Professionally Facilitated Project Partnering Bid item or Contract Change Order if no Bid item is specified. All other costs associated with the partnering workshops will be borne separately by the party incurring the costs (e.g., wages and travel expenses); no additional payment shall be made.

C. The establishment of Professionally Facilitated Project Partnering will not change or modify the terms and conditions of the Contract and will not relieve either party of its legal requirements of the Contract.

3.16. Claims and Disputes per Public Contract Code Section 9204

A. Public Contract Code Section 9204 (PCC 9204) applies to all contracts entered into on or after January 1, 2017. PCC 9204 shall remain in effect only until January 1, 2020, and as of that date is repealed, unless a later enacted statute,

that is enacted before January 1, 2020, deletes or extends that date. The provisions of PCC 9204 are set forth below.

B. The Legislature has found and declared that it is in the best interests of the state and its citizens to ensure that all construction business performed on a public works project in the state that is complete and not in dispute is paid in full and in a timely manner. PCC 9204 shall apply to any claim by a contractor in connection with a public works project.

C. Prior to submitting a claim per PCC 9204, the Contractor shall comply with Article 3.11.01. Protest, Article 3.11.02 Notice of Potential Claims, 3.12. Claims, A. through F.

D. For purposes of PCC 9204, the following definitions apply:

1. "Claim" means a separate demand by a contractor sent by registered mail or certified mail with return receipt requested, for one or more of the following:

    a. A time extension, including, without limitation, for relief from damages or penalties for delay assessed by a public entity under a contract for a public works project.

    b. Payment by the public entity of money or damages arising from work done by, or on behalf of, the contractor pursuant to the contract for a public works project and payment for which is not otherwise expressly provided or to which the claimant is not otherwise entitled.

    c. Payment of an amount that is disputed by the public entity.

2. "Contractor" means any type of contractor within the meaning of Chapter 9 (commencing with Section 7000) of Division 3 of the Business and Professions Code who has entered into a direct contract with a public entity for a public works project.

3. "Public entity" means, without limitation, except as provided in subparagraph (b), a state agency, department, office, division, bureau, board, or commission, the California State University, the University of California, a city, including a charter city, county, including a charter county, city and county, including a charter city and county, district, special district, public authority, political subdivision, public corporation, or nonprofit transit corporation wholly owned by a public agency and formed to carry out the purposes of the public agency.

4. "Public works project" means the erection, construction, alteration, repair, or improvement of any public structure, building, road, or other public improvement of any kind.

5. "Subcontractor" means any type of contractor within the meaning of Chapter 9 (commencing with Section 7000) of Division 3 of the Business and Professions Code who either is in direct contract with a contractor or is a lower tier subcontractor.

E. 1. a. Upon receipt of a claim pursuant to PCC 9204, the District shall conduct a reasonable review of the claim and, within a period not to exceed 45 days, shall provide the Contractor a written statement identifying what portion of the claim is disputed and what portion is undisputed. Upon receipt of a claim, the District and Contractor may, by mutual agreement, extend the time period provided in this Article.

1.b. The Contractor shall furnish reasonable documentation to support the claim.

1.c. If the District needs approval from the Board to provide the Contractor a written statement identifying the disputed portion and the undisputed portion of the claim, and the Board does not meet within the 45 days or within the mutually agreed to extension of time following receipt of a claim sent by registered mail or certified mail, return receipt requested, the District shall have up to three days following the next Board meeting after the 45-day period, or extension, expires to provide the Contactor a written statement identifying the disputed portion and the undisputed portion.

1.d. Any payment due on an undisputed portion of the claim shall be processed and made within 60 days after the District issues its written statement. If the District fails to issue a written statement, paragraph 3. below shall apply.

2.a. If the Contractor disputes the District's written response, or if the District fails to respond to a claim issued pursuant to this Article within the time prescribed, the Contractor may demand in writing an informal conference to meet and confer for settlement of the issues in dispute. Upon receipt of a demand in writing sent by registered mail or certified mail, return receipt requested, the District shall schedule a meet and confer conference within 30 days for settlement of the dispute.

2.b. Within 10 business days following the conclusion of the meet and confer conference, if the claim or any portion of the claim remains in dispute, the District shall provide the Contractor a written statement identifying the portion of the claim that remains in dispute and the portion that is undisputed. Any payment due on an undisputed portion of the claim shall be processed and made within 60 days after the District issues its written statement. Any disputed portion of the claim, as identified by the Contractor in writing, shall be submitted to nonbinding mediation, with the District and the Contractor sharing the associated costs equally. The District and Contractor shall mutually agree to a mediator within ten (10) business days after the disputed portion of the claim has been identified in writing. If the parties cannot agree upon a mediator, each party shall

select a mediator and those mediators shall select a qualified neutral third party to mediate with regard to the disputed portion of the claim. Each party shall bear the fees and costs charged by its respective mediator in connection with the selection of the neutral mediator. If mediation is unsuccessful, the parts of the claim remaining in dispute shall be subject to applicable procedures outside this Article.

2.c. For purposes of this section, mediation includes any nonbinding process, including, but not limited to, neutral evaluation or a dispute review board, in which an independent third party assists the parties in dispute resolution through negotiation or by issuance of an evaluation. Any mediation utilized shall conform to the timeframes in this Article.

2.d. Unless otherwise agreed to by the District and the Contractor in writing, the mediation conducted pursuant to this Article shall excuse any further obligation under Public Contract Code Section 20104.4 (see Article 3.12.01. Claims Less Than Fifty Thousand Dollars through Article 3.12.04. Civil Actions) to mediate after litigation has been commenced.

2.e. This Article does not preclude the District from requiring arbitration of disputes under private arbitration or the Public Works Contract Arbitration Program, if mediation under this Article does not resolve the parties' dispute.

3. Failure by the District to respond to a claim from a Contractor within the time periods described in this Article shall result in the claim being deemed rejected in its entirety. A claim that is denied by reason of the District's failure to have responded to a claim, or its failure to otherwise meet the time requirements of this Article, shall not constitute an adverse finding with regard to the merits of the claim or the responsibility or qualifications of the Contractor.

4. Amounts not paid in a timely manner as required by this Article shall bear interest at 7 percent per annum.

5. If a Subcontractor or a lower tier Subcontractor lacks legal standing to assert a claim against the District because privity of contract does not exist, the Contractor may present to the District a claim on behalf of a Subcontractor or lower tier Subcontractor. A Subcontractor may request in writing, either on his or her own behalf or on behalf of a lower tier Subcontractor, that the Contractor present a claim for work which was performed by the Subcontractor or by a lower tier Subcontractor on behalf of the Subcontractor. The Subcontractor requesting that the claim be presented to the District shall furnish reasonable documentation to support the claim. Within 45 days of receipt of this written request, the Contractor shall notify the Subcontractor in writing as to whether the Contractor presented the claim to the District and, if the original

Contractor did not present the claim, provide the Subcontractor with a statement of the reasons for not having done so.

F. A waiver of the rights granted by PCC 9204 is void and contrary to public policy, provided, however, that (1) upon receipt of a claim, the parties may mutually agree to waive, in writing, mediation and proceed directly to the commencement of a civil action or binding arbitration, as applicable; and (2) a public entity may prescribe reasonable change order, claim, and dispute resolution procedures and requirements in addition to the provisions of PCC 9204, so long as the contractual provisions do not conflict with or otherwise impair the timeframes and procedures set forth in PCC 9204.

G. Nothing in PCC 9204 shall impose liability upon a public entity that makes loans or grants available through a competitive application process, for the failure of an awardee to meet its contractual obligations**.**

3.17. Choice of Law and Venue

A. The Parties agree that this Agreement is to be governed, construed and enforced in accordance with the laws of the State of California. The Parties also agree that the venue of any litigation arising out of or connected with this Agreement will lie exclusively in the state trial court or Federal District Court located in Santa Clara County in the State of California. The Parties consent to jurisdiction over their persons and over the subject matter of any such litigation in such courts, and consent to service of process issued by such courts.

SECTION 4. LEGAL REGULATIONS AND RESPONSIBILITY

4.01. Laws to be Observed

A. The Contractor shall remain informed of and in compliance with the latest version of applicable existing and future Federal, State, County, and Municipal laws, ordinances, rules, and regulations, including, but not limited to, those cited herein.

4.02. Equal Opportunity Requirements

A. The Santa Clara Valley Water District is an equal opportunity employer and requires its contractors to have and adhere to a policy of equal opportunity and nondiscrimination. In the performance of the Agreement, the Contractor will comply with all applicable Federal, State, Local Laws and Regulations, and will not discriminate against any Subcontractor, employee, or applicant for employment in the recruitment, hiring, employment, utilization, promotion, classification or reclassification, transfer, recruitment advertising, evaluation, treatment, demotion, layoff, termination, rates of pay or other forms of compensation, and selection for professional development training (including apprenticeship); or against any other person on the basis of sex (which includes pregnancy, childbirth, breastfeeding, and medical conditions related to pregnancy, childbirth, or breastfeeding); race, religion, color, national origin (including language-use restrictions); ancestry, religious creed (including religious dress and grooming practices); political affiliation, disability (mental and physical, including HIV or AIDS); medical condition (cancer and genetic characteristics) and genetic information; marital status, parental status, gender, age (40 and over); pregnancy, military, and veteran status; sexual orientation, gender identity, and gender expression; the exercise of family and medical care leave; the exercise of pregnancy disability leave; or the request, exercise, or need for reasonable accommodation.

B. The Contractor's policy must conform with applicable State and Federal guidelines, including the Federal Equal Opportunity Clause, "Section 60-1.4 of Title 41, Part 60 of the Code of Federal Regulations;" Title VII of the Civil Rights Act of 1964 as amended; the American's with Disabilities Act of 1990; the Rehabilitation Act of 1973 (Sections 503 and 504); the Age Discrimination Act of 1975 (42 U.S.C. Section 6101 et. seq.); California Fair Employment and Housing Act (Government Code Section 12900 et. seq.); and California Labor Code Sections 1101 and 1102.

C. Investigations of Claims

Contractor must designate a specific position within its organization to be responsible for assuring nondiscrimination and non-harassment as provided in this Agreement. Contractor must investigate all complaints directed to it by District. District will refer complaints in writing and Contractor will advise District in writing when such investigations are concluded. The scope of such investigations must include all appropriate officers, employees, and agents of Contractor as well as all consultants, subcontractors, Subconsultants, and

material suppliers of Contractor. In cases where such investigation results in a finding of discrimination, harassment, or hostile work environment, Contractor must take prompt, effective disciplinary action against the offender.

4.03. Employment of Labor

A. In the employment of labor in the performance of the Contract, the District desires that the Contractor and all Subcontractors give first consideration to residents of the District.

4.04. Prevailing Wages

A. The Work to be performed pursuant to this Contract is "public works" subject to the California Prevailing Wage Law, California Labor Code Section 1720, et seq. and the applicable implementing regulations (the Prevailing Wage Law) with which the Contractor must comply. The General Prevailing Wage Rates issued by the California Department of Industrial Relations may be adjusted by the State during the term of this Contract. Notwithstanding any other provisions of this Contract, the Contractor will not be entitled to any adjustment in compensation in the event there are adjustments to the General Prevailing Wage Rates.

1. In accordance with the Prevailing Wage Law, the Director of the Department of Industrial Relations has ascertained the general prevailing rate of wages and employer payments for health and welfare, pension, vacation, and similar purposes available to the particular craft, classification, or type of workers employed on the Work. These rates are set forth in the latest determination obtained from the Director, which is on file in the office of the Clerk of the Board of Directors and incorporated herein by reference the same as though set out in full. The rates are also available on the State of California Department of Industrial Relations website at http://www.dir.ca.gov.

2. The Contractor shall pay a penalty to the District of $200 for each Day, or portion thereof, for each worker paid less than the stipulated prevailing rate for any public Work done under the Contract by the Contractor or by any Subcontractor in violation of the provisions of the Prevailing Wage Law.

B. Each Contractor and Subcontractor shall keep an accurate payroll record, showing the name, address, Social Security number, work classification, straight time, and overtime hours worked each Day and week, and the actual per-diem wages paid to each journeyman, apprentice, worker, or other employee by him/her in connection with the public Work. The payroll records shall be certified and shall be available for inspection at all reasonable hours at the principal office of the Contractor in accordance with the Prevailing Wage Law.

1. The Contractor and each Subcontractor, pursuant to California Labor Code Section 1776, must submit certified weekly payroll(s) within ten (10) Days after the Owner's request for submission of certified weekly payroll

records. The certified payroll(s) must include the date of actual payment of wages for each worker employed on the Project and a breakdown of each payment, including all fringe benefits included in such wage for each worker.

2. In the event that the Contractor fails to comply with the ten (10)-Day submission deadline of California Labor Code Section 1776, the Contractor shall pay a penalty to the District of $100 for each calendar Day or portion thereof, for each worker, until the Contractor achieves compliance with Section 1776.

3. The Contractor shall inform the District of the location of the payroll records—including the street address, city, and county—and shall, within five (5) working Days, provide a notice of a change in location and address. The Contractor is responsible for compliance with payroll record requirements imposed by Section 1776 of the Labor Code.

C. The Contractor must submit certified weekly payroll(s) in support of the monthly request for payment as required herein. Certified weekly payroll(s) must be submitted within ten (10) calendar Days from the progress payment end date. Payroll(s) shall contain the full name, address, and Social Security number of each employee; his/her correct classification and rate of pay; daily and weekly number of hours worked; itemized deductions made; and actual wages paid. Payroll shall also indicate apprentices and ratio of apprentices to journeymen. The employee's address and Social Security number need only appear on the first payroll on which his/her name appears. The payroll(s) shall be accompanied by a Statement of Compliance signed by the employer or agent indicating that the payroll(s) is correct and complete and that the wage rates contained therein are not less than those required by the Contract. The Statement of Compliance shall be on forms furnished by the District or on any form with identical wording. The Contractor shall be responsible for the submission of copies of the payroll(s) of all Subcontractors, including sub-Subcontractors.

1. This project is subject to compliance monitoring and enforcement by the State of California Department of Industrial Relations. The Contractor and Subcontractors must furnish the records specified in Section 1776 directly to the Labor Commissioner in the following manner: monthly, in a format prescribed by the Labor Commissioner.

2. The District will take all actions reasonably necessary to enforce the prevailing wage requirements of this Contract, including retaining progress payment funds not supported by certified payroll(s).

3. Retentions for failure to submit satisfactory payroll(s) are in addition to all other retentions provided for in the Contract.

D. The Contractor and each Subcontractor shall preserve their respective payroll records for a period of four (4) years from the date of filing a Notice of Completion and Acceptance under the Contract.

1. The work of installing, assembling, repairing, or reconditioning—or other work of any nature on machinery, Equipment, or tools used in or upon the Work—is considered a part of the Work to be performed under the Contract; any laborers, workers, or mechanics working on such machinery, Equipment, or tools are subject to all of the requirements relating to labor set forth in the Contract.

2. The construction, erection, and operation of Material production, proportioning, or mixing plants from which Material is used wholly on the Contract or on contracts under the supervision of the District shall be considered a part of the Work to be performed under the Contract; any laborers, workers, or mechanics working on such plants shall be subject to all of the requirements relating to labor set forth in the Contract.

4.05. Hours of Labor

A. Eight (8) hours of labor constitutes a legal Day of work. The Contractor shall pay a penalty to the District of $25 for each worker employed in the execution of the Contract by the Contractor or by any Subcontractor for each Day during which such worker is required or permitted to labor more than eight (8) hours in violation of Labor Code Sections 1810 to 1815, inclusive.

4.06. Apprentices

A. The Contractor shall comply with Sections 1777.5, 1777.6, and 1777.7 of the Labor Code concerning the employment of apprentices by the Contractor or by any Subcontractor.

B. Section 1777.5 requires the Contractor or Subcontractor employing persons as defined in any apprenticeable occupation to apply for a certificate of approval to the joint apprenticeship committee that is nearest the site of the public works project and that administers the apprenticeship program in that trade. The certificate will also fix the ratio of apprentices to journeymen that will be used in the performance of the Contract. The ratio of work performed by apprentices to journeymen in such cases shall not be less than one (1) hour to five (5) hours, except when the committee finds that any one of the following conditions are met:

1. In the event unemployment for the previous three (3)-month period in the Project site area exceeds an average of 15 percent; or

2. In the event the number of apprentices in the area exceeds a ratio of one (1) to five (5); or

3. If there is a showing that the apprenticeable craft or trade is replacing at least one thirtieth of its journeymen annually through apprenticeship training either (i) on a statewide basis, or (ii) on a local basis; or

4. If assignment of an apprentice to any Work performed under a public works contract would create a condition that would jeopardize his/her life; or the life, safety, or property of fellow employees; or the public at large; or if the specific task to which the apprentice is to be assigned is of such a nature that training cannot be provided by a journeyman.

C. The Contractor is required to make contributions to funds established for the administration of apprenticeship programs if the Contractor employs registered apprentices or journeymen in any apprenticeable trade on such contracts and if other contractors on the public works site are making such contributions.

D. The Contractor and any Subcontractor shall comply with the requirements of Sections 1777.5 and 1777.6 in the employment of apprentices.

E. Information relative to apprenticeship standards, wage schedules, and other requirements may be obtained from the Director of Industrial Relations, ex officio the Administrator of Apprenticeship, San Francisco, CA, or from the Division of Apprenticeship Standards and its branch offices.

4.07. Permits and Licenses

A. The Contractor shall procure all permits and licenses, pay all charges and fees, and give all notices necessary and incident to the prosecution of the Work, except as provided in the Special Provisions.

4.08. Patents and Copyrights

A. The Contractor shall assume all costs, including any costs of defense arising from the use of any copyrighted composition, secret process, patented or unpatented invention, article, Equipment, device, or appliance manufactured, furnished, or used in the performance of the Contract, including their use by the District, unless otherwise specifically stipulated in the Specifications.

4.09. Interference With Fire Hydrants, Highways, and Fences

A. The Contractor shall conduct operations so as not to close or obstruct any portion of any highway, road, or street, or prevent in any way free access to fire hydrants until permits have been obtained thereof from the proper authorities. If any highway required to be kept open shall be rendered unsafe by the Contractor's operations, the Contractor shall make such repairs or provide such temporary guards as shall be acceptable to the authorities having jurisdiction and to the Engineer. Any highway or street maintenance or repair work required by local authorities in connection with necessary operations under the Contract shall be performed by the Contractor at the Contractor's own cost and expense. Fences subject to interference shall be maintained as effective barriers consistent with the original intent; upon approval of the Engineer, they may be moved or rearranged to facilitate prosecution of the Work until the Work is finished, after which they shall be restored to their original location in an equal or better condition than existed prior to rearrangement.

4.10. Preservation of Property

A. The Contractor shall exercise due care to avoid damage to existing improvements, utility facilities, and adjacent property, real and personal. The fact that any existing underground improvement or facility is not shown on the Drawings shall not relieve the Contractor of the responsibility to ascertain the existence of any underground improvement or facility that may be subject to damage by reason of the Contractor's operations.

B. Any damage to improvements or property—whether above or below ground, private or public, within or adjacent to the Project limits—arising from or in consequence of the performance of the Contract shall be promptly repaired by the Contractor.

C. If the Engineer requires such repair to be made prior to the execution or continued performance of any part of the Work included in this Contract, the Engineer will so notify the Contractor who shall delay or discontinue the performance of that part of the Work until the necessary repair has been made. Such delay shall be considered Inexcusable Delay; no extension of time for completion of the Contract will be allowed. The Contractor will be subject to Contract damages for any impact to the Contract Milestones resulting from its damage to property or from failure to make timely repairs.

D. When ordered by the Engineer to make any such repair, the Contractor shall start work thereon within four (4) hours and shall prosecute the same with diligence to completion. Upon failure of the Contractor to so comply with such order, or upon the Contractor's failure to make immediate emergency repairs reasonably determined by the Engineer to be necessary in the best interests of the public, the Engineer shall have authority to cause the repair to be made and to deduct the costs thereof from any money due, or which may become due, the Contractor.

E. In an emergency affecting the safety of life or property, including adjoining property, the Contractor shall act to prevent, to the extent possible, such threatened loss or injury whether instructed or not to do so by the Engineer.

4.11. Contractor's Responsibility for the Work

A. Until the Acceptance of the Work, the Contractor shall have the charge and care of the Work and of the Material to be used therein and shall bear the risk of injury, loss, or damage to any part thereof by the action of the elements or from any other cause, whether arising from the execution or from non-execution of the Work. The Material to be used in the Work include both those furnished by the District and those furnished by the Contractor, including Material for which the Contractor has received partial payment.

4.12. Indemnification

A. The Contractor shall defend, indemnify, and hold harmless the District and its Directors, officers, employees, and agents from liability, loss, suits, actions, or claims brought for or on account of violation of Laws, Ordinances, Rules, or Regulations, or injury, damage, or loss (including death) caused by acts or omissions of the Contractor, its employees, or its agents.

B. The Contractor shall defend, indemnify, and hold harmless the agencies/parties named in Article 14.16. Insurance, of the Special Provisions—including their officers, employees, and agents—from liability, loss, suits, actions, or claims brought for or on account of any violation of Laws, Ordinances, Rules, or Regulations, or injury, damage, or loss (including death) caused by acts or omissions of the Contractor, its employees, or its agents.

4.13. Contractor's Insurance

4.13.01. General

A. The insurance procured by the Contractor for the benefit of Santa Clara Valley Water District shall not be deemed to release or limit any liability of the Contractor. Damages recoverable by Santa Clara Valley Water District for any liability of the Contractor shall, in any event, not be limited by the amount of the required insurance coverage. Failure by the Contractor to maintain all required insurance at all times during the performance of this Contract and until acceptance by the District, shall, at the discretion of the District, result in temporary suspension of Work, or termination of control, or termination of the Contract as indicated herein, and shall not be a basis for a time extension. The Contractor's insurance shall be primary with respect to any other insurance that may be carried by Santa Clara Valley Water District.

B. The District has the right to require the Contractor to provide complete, certified copies of all required pertinent insurance policies, including endorsements affecting the coverage required by the Agreement.

C. The specific insurance requirements and coverages shall be in accordance with the Special Provisions.

4.13.02. Insurance on Work and Material

A. The Contractor shall secure and maintain such direct damage insurance against such perils as the Contractor may deem necessary to protect the Work called for in this Contract, including Work completed, Material in place or to be used in the performance of this Contract, and such other miscellaneous items as may be necessary to the performance of this Contract.

4.14. Payment of Taxes

A. Except as otherwise specifically provided in the Special Provisions, the Contract Price(s) shall include full compensation for all current and future taxes that the Contractor is required to pay, whether imposed by Federal, State, or Local government; no tax exemption certificate or any other document designed to exempt the Contractor from payment of tax will be furnished to the Contractor by the District.

4.15. Cooperation With Others

A. The District reserves the right to do other work on or near the Project. The Contractor shall cooperate with others and coordinate its Work with planned or ongoing work of the District or of other District contractors within or adjacent to the limits of the Contract Work. The Contractor shall conduct the Work so as to facilitate work by the District or by others and prevent delay, additional expense, or hindrance thereto, and allow for the satisfactory prosecution of the Work.

B. The Contractor shall request from, and exchange with others, Drawings, data, and information as necessary to ensure proper completion of the Project and of the work of others. The Contractor shall furnish to the Engineer copies of correspondence and Drawings exchanged with other contractors.

C. The Contractor shall complete the following activities as requested by the Engineer to assist in the coordination of Contract Work with work by others: attend planning meetings; review and comment on Project documents relative to coordination aspects; schedule Work to promote efficient installation of all improvements; move Material, Equipment, or vehicles to allow work by others to proceed; and other reasonable activities.

D. No additional payment shall be made or Claims considered for Delay due to the Contractor's failure to coordinate the Work or because of conflicts with other construction, including that of the District.

E. The Contractor agrees to reimburse the District for any payments made to other Contractors that were incurred as a result of the Contractor's Inexcusable Delays.

4.16. Property Rights in Material

A. Nothing in the Contract shall be construed as vesting in the Contractor any right of property in the Material used after they have been attached or affixed to the Work or after payment has been made for 90 percent of the value of Material delivered to the site of the Work, whether or not they have been so attached or affixed. All such Materials shall become the property of the District upon being so attached or affixed or upon payment of 90 percent of the value of Material delivered by the Contractor to the worksite and not used as provided herein.

4.17. Rights in Land and Improvements

A. Nothing in these Standards shall be construed as allowing the Contractor to make any arrangements with any person to permit occupancy or use of any land, structure, or building within the limits of the Contract for any purpose whatsoever, either with or without compensation, in conflict with any agreement between the District and any owner, former owner, or tenant of such land, structure, or building.

4.18. Title to Material Found on the Work

A. The title to all water and to the right to use all water; and all soil, stone, gravel, sand, minerals; and all other Material developed or obtained in the excavation or other operations by the Contractor, or by any Subcontractor, or by any of their employees, and the right to use or dispose of the same are hereby expressly reserved by the District; neither the Contractor, nor any Subcontractor, nor any of their employees shall have any right, title, or interest in, or to any part thereof; neither shall they, nor any of them, assert or make any claim thereto. The Contractor may be permitted to use in the Work, without charge, any such Material that meet the requirements of these Specifications.

4.19. Trespass

A. The Contractor shall be responsible for all damage or injury that may be caused on or to any property by trespass by the Contractor, any Subcontractor, or any of their employees in the course of their employment, whether the said trespass was committed with or without the consent or knowledge of the Contractor.

4.20. Subcontracting

A. The Contractor shall comply with the Subletting and Subcontracting Fair Practices Act commencing with Public Contract Code Section 4100. Violations shall subject the Contractor to penalties described therein.

B. For the purposes of consenting to substitution of a designated Subcontractor in accordance with Public Contract Code Section 4107, 4109, and 4110, the Administrative Hearing Officer will be in accordance with Article 3.02. Engineer.

C. The Engineer reserves the right to order the Contractor to terminate any subcontract if, in the Engineer's opinion, the Subcontractor fails to comply with the applicable requirements of this Contract.

D. Nothing herein contained shall create any contractual relation between any Subcontractor and the District or shall relieve the Contractor of any liability or obligation hereunder.

E. All contracts with Subcontractors and lower-tier Subcontractors and purchase agreements with Suppliers and lower-tier Suppliers shall provide that they are

freely assignable to the District or to the District's designee under the following conditions:

1. The District terminates the Contractor's control of the Work in accordance with Article 4.22. Termination of Control; and

2. The District directs such assignment.

4.21. Assignment of Antitrust Claims

A. Government Code Sections 4550 through 4554 pertaining to the assignment of antitrust claims are incorporated herein in full by this reference.

4.22. Termination of Control

A. The District may terminate the Contractor's control of the Work at any time upon a determination that the same is in the best interests of the District.

4.23. Termination of Contract

A. The District may terminate the Contract at any time upon a determination that the same is in the best interests of the District. Upon such termination, the rights, duties, and obligations of the parties shall be as stated in Section 8-1.14 of the 2010 State Specifications, wherein the words "Director" and "Engineer" shall mean the Engineer and the words "State" and "Department" shall mean District. Payment after termination of Contract shall be in accordance with the District's Standard and Special Provisions.

4.24. Contractor's Cost Data

A. The District or any of its duly authorized representatives shall, until the expiration of four (4) years after filing the Notice of Completion and Acceptance under this Contract or any subcontract under it, have access to and the right to examine any Contractor or Subcontractor payroll, records of personnel, invoices of Material, records of plant and Equipment costs, and any and all other directly pertinent books, documents, papers, and records of such Contractor or Subcontractors involving transactions related to the said Contract or subcontracts. In the event State or Federal funds are involved in financing the Project, the State or Federal Government shall have the same rights of inspection as the District.

4.25. Coordination With Utilities

A. In general, the location of existing utility facilities as shown on the Drawings is approximate. This information has been obtained from utility maps furnished by the various agencies involved; the District does not guarantee either the correctness of the locations or the extent of such locations.

B. California Government Code Section 4215 does not require public agencies to indicate the presence of service laterals or appurtenances whenever the presence of such utilities can be inferred from the presence of other visible facilities (e.g., buildings, meter boxes, junction boxes) on or adjacent to the construction site. Service laterals (e.g., house sanitary, water, electrical, gas, cable TV, storm or telephone cables, appurtenances) may not all be shown on the Drawings. No changes in the Contract Price(s) or the Contract Time(s) shall be made due to the presence of unidentified or incorrectly located service laterals or appurtenances. It shall be the responsibility of the Contractor to ascertain the exact location of the utility facilities.

C. Unless otherwise indicated on the Drawings or specified in the Specifications, the Contractor shall maintain in service all utilities, including house services, power, lighting, and telephone conduits, and any other surface or subsurface structure or facility of any nature that may be affected by the Work; provided, however, that the Contractor, for convenience, may arrange with the owner to temporarily disconnect house service lines or other facilities along the line of the Work. The cost of disconnecting and restoring such utilities shall be borne by the Contractor.

D. In the event that a main or trunk-line utility facility is encountered that interferes with the Work and that is neither shown on the Drawings nor specified in the Specifications, the Contractor shall immediately notify the District in writing. The District may have the appropriate utility company or public agency relocate the facility, or the District may direct the Contractor to relocate the facility in accordance with Article 3.06. Changes in the Work.

E. In the event that a main or trunk-line utility facility is encountered that interferes with the Work and that the Contractor believes is not shown on the Drawings or indicated in the Specifications with Reasonable Accuracy, the Contractor shall immediately notify the District in writing.

1. If the Engineer determines that the main or trunk-line utility facility was shown on the Drawings or was indicated in the Specifications with Reasonable Accuracy, the Contractor shall be solely responsible for relocation or removal; no additional time shall be granted nor additional payment made, for any additional Work required.

2. If the Engineer determines that the main or trunk-line utility facility was not shown on the Drawings or was not indicated in the Specifications with Reasonable Accuracy, the District may have the appropriate utility company or public agency relocate the facility, or the District may direct the Contractor to relocate the facility in accordance with Article 3.06. Changes in the Work.

F. When a delay in the completion of the Project is caused by the failure of the District or by the owner of a utility facility to provide for removal or relocation of existing main or trunk-line utility facilities that are not shown on the Drawings or that are not indicated in the Specifications or that are not shown on the Drawings or indicated in the Specifications with Reasonable Accuracy, the Contract

Time(s) shall be extended in accordance with Article 3.08. Change in Contract Time(s).

4.26. Asbestos-Related Work

A. The Contractor shall comply with California Business and Professions Code Section 7058.5, which states that no Contractor shall engage in asbestos-related work, as defined, unless certified by the Contractor's State License Board to do so.

B. The Contractor shall comply with California Labor Code Section 6501.5 relative to asbestos related work, the applicable provisions of the Code of Regulations, Title 8 General Industry Safety Orders, and BAAQMD Regulation 11 Rule 2.

SECTION 5. PROSECUTION AND PROGRESS OF WORK

5.01. Assignment

A. The performance of the Contract may not be assigned except upon consent of the Board of Directors. Consent shall not be given to any proposed assignment that would relieve the original Contractor or surety of its responsibilities set forth in the Contract.

B. The Contractor may assign moneys due in accordance with the Contract; such assignment shall be recognized by the District if given proper notice thereof, to the extent permitted by law. Assignment of moneys shall be subject to all proper setoffs in favor of the District and to all deductions provided for in the Contract. All money withheld, whether assigned or not, shall be controlled by the District.

5.02. Notice to Proceed

A. The Notice to Proceed (NTP) shall be issued by the Engineer within ten (10) Days after receipt of the signed Agreement and after approval by the District of the contract bonds and insurance documents. The NTP authorizes the Contractor to proceed with the Work and establishes the First Chargeable Day of the Contract.

5.03. Commencement of Work

A. The First Chargeable Day as specified in the NTP will be at least ten (10) Days after the date of said Notice.

B. The Contractor shall provide written notice to the Engineer, at least 2 working days in advance, of the date the Contractor intends to start work on site.

5.04. Professional Scheduler

A. All Detailed Progress Schedules shall be prepared and updated throughout the Contract Time(s) by a Schedule Professional who has, at a minimum, five (5) years of recent, verifiable experience in preparing, updating, and maintaining computerized Critical Path Method (CPM) construction schedules using Oracle Primavera, Microsoft Project, or similar scheduling software on at least two (2) completed construction projects of a similar size and degree of complexity as this Project.

B. Prior to the Contractor’s submission of the initial Detailed Progress Schedule, the Contractor shall submit and receive a favorable review of the résumé and professional references of the proposed Scheduler. The references shall be from at least two (2) project owners or construction managers familiar with the Scheduler's work on projects identified in the Scheduler’s résumé. The District reserves the right to reject the proposed Scheduler based on lack of qualifications as defined in this Article.

5.05. Progress Schedules

A. The Contractor is responsible for scheduling the sequence of its Work in all Progress Schedule(s) as described below.

5.05.01. Preliminary Progress Schedule

A. Within ten (10) Days of the First Chargeable Day of the Contract as specified in the NTP, the Contractor shall submit to the Engineer a Preliminary Progress Schedule. This schedule shall include all activities that are planned to occur within the first 45 Days of the Contract.

5.05.02. Baseline Progress Schedule

A. Within 30 Days of the First Chargeable Day of the Contract as specified in the NTP, the Contractor shall submit its initial Detailed Progress Schedule, which, if accepted, shall become the Baseline Progress Schedule for the Project. The submittal shall be in hard copy and native electronic format and shall fully conform to the numbered items below:

1. The schedule shall be prepared using Oracle Primavera, Microsoft Project or similar Precedence Diagramming Method (PDM) scheduling software.

2. The Baseline Progress Schedule shall be a Critical Path Method (CPM) schedule that is comprehensive, credible, well-constructed, and controlled. The schedule shall include input from its major Subcontractors and Suppliers and represent the complete scope of work. It shall represent the planned order of significant activities to complete the Work within the time allowed under this Contract. Any Detailed Progress Schedules shall be presented in sufficient detail such that sequence and interdependence of activities of the Project can be identified. The schedule shall include proper logic and adequate activity durations and show a logical critical path and Controlling Items of Work.

3. The schedule shall account for on-site and off-site activities, including, but not limited to, permits, mobilization, and submittals (prepare and submit, review and approve, revise and resubmit); fabrication and delivery, installation, construction, system shutdowns, testing and start-up; training of District personnel; deficiency list; closeout; and demobilization. The schedule shall include key Milestones; reviews by the District, regulatory agencies, and other third parties of the Work; construction and sequencing constraints as specified in these Specifications; construction Work by the District forces or other third parties that interface with the Work; District-managed activities, such as the District furnishing Equipment; removal or relocation of interfering utilities by third parties; delivery of operation and maintenance manuals; and adequate time for Work completion and closeout activities.

4. Activity calendars shall reflect the planning basis and any Contract restrictions. All non-work Days and work hours shall be explained for each calendar.

5. The schedule shall reflect any limitations on work hours required by the Contract and any permit restrictions and conditions that are required.

6. Each schedule activity shall include a unique ID number and description, pertinent predecessors and successors, start/finish dates, an assigned workday calendar, a duration, percent complete, calculated float and activity codes to group the Work into Work Breakdown Structure (WBS) categories, location, responsibility, trade, and other rational groupings to facilitate sorting and filtering of the schedule activities.

7. Activities making up the critical path for the entire Contract and the critical path for each specific designated portion of the Work shall be identified. The network diagram shall be organized to indicate a continuous flow of progress of activities from left to right.

8. Except for concrete curing, submittal review, Equipment fabrication and deliveries, schedule activities shall be no longer than 20 working days. Activities longer than 20 working Days shall be subdivided into sub elements of work.

9. The Contractor shall submit a tabular listing of the schedule along with the network diagram.

10. The use of float suppression techniques, such as preferential sequencing (arranging critical path through activities more susceptible to District-caused delay); special lead/lag logic restraints; zero-total or free-float constraints; extended activity times; or imposing constraint dates other than required by this Contract shall be cause for rejection of the schedule using such techniques. The use of Resource Leveling (or similar software features) for the purpose of artificially adjusting activity durations to consume float and influence the critical path shall also be cause for rejection.

11. The Engineer’s favorable review of the schedule shall not relieve the Contractor of errors and omissions in tasks, durations, or logic. No time extensions shall be granted because of errors or omissions on the schedule. It is the Contractor's responsibility to incorporate all necessary activities to cover the entire Work scope.

12. A favorably reviewed Baseline Progress Schedule is a condition precedent to payment.

B. Cost Loading

1. Work activities other than third-party and District-managed activities shall be cost loaded. No activity shall have a value greater than $50,000 except for activities representing major Equipment purchases or installation. Progress Schedules exhibiting front-loaded costs are unacceptable. The Contractor shall revise the Schedule of Values (SOV) pursuant to Article 6.01. Schedule of Values until accepted by the Engineer.

2. The Contractor shall create two (2) hierarchical schedule activity codes in the scheduling software: (i) Bid Item and (ii) SOV. Each code shall have line item name corresponding to the accepted Bid items and SOV titles. Costs shall progressively roll up from the activity level to the SOV level; SOV codes shall roll up to the Bid Item level.

3. Each cost-loaded schedule activity shall be assigned one of the SOV codes. An activity shall not contain work assigned to more than one SOV code. The SOV code will be used to summarize cost-loaded activity values to produce the required SOV submittal. Table 6-1, referenced in Article 6.01.02. Submittal, is an acceptable form for this submittal. The SOV submittal shall be produced from the Progress Schedule software.

4. The sum of the monetary values of the activities assigned to each SOV code shall be equal to the accepted amount of that SOV line item. The sum of all the cost-loaded activities in the latest accepted schedule update shall total the latest approved Contract amount.

C. Early Completion Schedule

1. The District is not required to accept an earlier (advanced) schedule (i.e., one that shows early completion date[s] but within the specified Contract Time[s]). Time(s) for completion of Work shall adhere to the Contract Time(s) specified in these Specifications unless earlier time(s) of completion is requested by the Contractor and agreed to by the District. Any such agreement shall be formalized by a Change Order or by a DCO.

2. If the Contractor submits any Baseline Progress Schedule or Detailed Progress Schedules showing any Contract Time(s) earlier than a corresponding, specified Contract Time(s) and that early completion date is not agreed to by both parties through a Change Order or through a DCO, the duration from such early completion date and from the specified Contract Time(s) is considered “float” and shall belong to the Project.

3. Accordingly, the Contractor in this situation is to show in the Baseline Progress Schedule or in the Detailed Progress Schedules a specific activity identified as Project Completion Float, which may be adjusted as that float is used or increased. The Contractor shall not be entitled to a

time extension due to any cause or reason that consumes Project Completion Float.

5.05.03. Revised Baseline Schedules

A. If the Contractor desires to make a change to the Baseline Progress Schedule after commencing construction, a revised Baseline Progress Schedule and associated narrative shall be submitted to the District at least 15 Days prior to any such change.

B. The narrative shall state the reasons for the change; any change to the Baseline Progress Schedule shall be discussed in the submittal to the District.

C. A revised Baseline Progress Schedule shall not become effective until accepted by the District.

5.05.04. Updates to the Detailed Progress Schedules

A. Any and all updates or revisions to the initial Detailed Progress Schedule shall conform to the same requirements as the Baseline Schedule in Article 5.05.02. Baseline Progress Schedule.

B. The Contractor shall submit an update of the prior month's Detailed Progress Schedule to the Engineer before the twenty-fifth Day of each month.

C. Each schedule update shall incorporate all current information, including progress. Actual start and finish dates shall be updated and shall match daily reports. Work completed shall be shown with actual start and finish dates for each activity. Work in progress shall be shown with the actual start date and the percentage of Work completed as of the last date of the previous month.

D. The Contractor shall also submit a narrative report that shall include a description of problem areas, state the reasons for any changes made to the schedule activities, current and anticipated delaying factors and their impact, and an explanation of corrective actions taken or proposed.

E. Progress status shall be evaluated on the basis of float on the critical path at the time of updating, with negative float indicating the Project is behind schedule and positive float indicating ahead-of-schedule status.

F. Acceptance of the Detailed Progress Schedule updates is a condition precedent to payment.

G. Recovery Schedules

1. At any time that construction progress lags behind any Baseline Progress Schedule or any updated/revised Detailed Progress Schedule accepted by the Engineer by either ten (10) working days or by five (5) percent of the remaining time to complete the Contract, whichever is less, the

Contractor shall prepare and submit a Recovery Schedule to the Engineer. This Recovery Schedule shall demonstrate how construction will be expedited and executed to achieve the contractual completion dates (either Milestone Completion or Project Completion dates).

2. Activity ID numbers shall be the same as in the most current and accepted and updated Detailed Progress Schedule. ID numbers of deleted activities shall not be reused on the Recovery Schedule. New ID numbers (not used in the most current and accepted Detailed Progress Schedule) shall be used for new activities.

3. A revised narrative describing the remaining Work as reflected in the Recovery Schedule shall be included and shall include a separate listing of all activities deleted, changed, or added with an explanation for each change.

4. Once favorably reviewed by the Engineer, the Recovery Schedule shall become the current, revised Detailed Progress Schedule against which future progress is to be measured.

5.05.05 Time Impact Analysis

A. If the Contractor foresees that an Excusable Delay, as defined, will impact a Controlling Item of Work, a written request for adjustment of the impacted Contract Time(s) and supporting data shall be promptly submitted to the Engineer in accordance with Article 3.08. Change in Contract Time(s). To substantiate the Contractor's request, the supporting data shall include a Time Impact Analysis (TIA) based on the updated and accepted Detailed Progress Schedule for the month preceding the Excusable Delay.

B. The TIA shall represent Excusable Delays as separate activities or as groups of activities. These activities shall be entered into the relevant part of the schedule update that was accepted just prior to the time the Excusable Delay occurred. In case of a deductive change reducing the quantity of Work, activities representing the deleted scope shall be dissolved or its estimated duration adjusted to reflect the reduction.

C. The Contractor shall submit a written report with the TIA describing the Excusable Delay by the occurrence and the impact of the event time computation on all affected activities.

D. Only changes or delays that affect or create Controlling Items of Work as defined by the schedule shall result in time adjustments. The Engineer shall determine if a request for time extension is warranted.

E. Total float or slack is defined as the amount of time between the early start date and the late start date, or the early finish date and the late finish date of any activity in the schedule. Total float or slack is not for the exclusive use or benefit

of either the District or the Contractor. It is an expiring resource available to either party on a first-come, first-served basis.

5.05.06. "Three-Week-Look-Ahead" Schedules

A. The Contractor shall provide Three-Week-Look-Ahead Schedules on a weekly basis and present them at the weekly progress meetings.

B. The Three-Week-Look-Ahead Schedules shall be prepared in the form of a bar chart breaking down activities into detailed subtasks on the Contractor's Detailed Progress Schedules. Subtasks shall identify related activities on the Detailed Progress Schedules and responsibility for completion of the sub task.

C. The Contractor shall notify the Engineer in writing of any deviation from the current Three-Week-Look-Ahead Schedule within 24 hours of identification of said deviation.

D. The Three-Week-Look-Ahead Schedules shall indicate inspections by the Engineer or by regulatory agencies and construction Work by the District forces or by other third parties that interface with the Work.

5.05.07. Payment

A. Contractor shall submit a Baseline Progress Schedule, detailed monthly Progress Schedule updates, and Recovery Schedules to the District. The schedules shall be favorably reviewed by the District before a pending payment request is approved.

B. Full compensation for furnishing, updating, revising, and submitting Detailed Progress Schedules and associated reports shall be considered as included in various Contract items of work; no additional payment shall be made.

C. Submittal and favorable review of Detailed Progress Schedules and their components that meet the requirements of Article 5.05. Progress Schedules in this Section is a condition precedent to making a payment request.

5.06. Temporary Suspension of Work

A. By written order to the Contractor, the Engineer may suspend the Work, wholly or in part, for an indefinite period or for such period as the Engineer may deem necessary, for any of the following reasons:

1. Weather conditions or other conditions that are unfavorable for the proper prosecution of the Work.

2. Failure of the Contractor to carry out orders given or to perform any provisions of the Contract.

3. For the convenience and benefit of the District.

B. Such suspension shall be effective upon receipt by the Contractor of the written order suspending the Work and shall be terminated upon receipt by the Contractor of the written order terminating the suspension.

C. If the Engineer orders a suspension of all or of a portion of the Work that is on a critical path, pursuant to A.1 or A.3 in this Article, this shall be cause for a time extension if it impacts Milestone completion.

5.07. Liquidated Damages

A. If the Work is not finished or completed by the Milestone dates in the Contract, it is agreed that damage shall be sustained by the District and that it is and shall be impracticable and extremely difficult to ascertain and determine actual damage that the District will sustain. It is agreed that the Contractor shall pay to the District the sum(s) set forth in the Special Provisions. Liquidated Damages shall be assessed separately and independently.

B. The Contractor agrees to pay Liquidated Damages herein provided for, and further agrees that the District may deduct the amount thereof from any moneys due, or that may become due, to the Contractor under the Contract. Imposition of Liquidated Damages shall not preclude the District from taking other action as deemed appropriate to ensure performance of the Contract and shall not relieve the Contractor of its responsibility to comply with these Specifications.

SECTION 6. MEASUREMENT AND PAYMENT

6.01. Schedule of Values

6.01.01. Preparation

A. The Contractor shall develop the Schedule of Values (SOV) in the Baseline Progress Schedule.

B. Progress payments shall not be made until the SOV has received a favorable review by the Engineer.

C. Each schedule activity representing a component of lump-sum Bid items shall include a directly proportional amount of the Contractor's overhead and profit. The Contractor's overhead and profit shall be completely distributed among all schedule activities. The Contractor shall provide additional cost documentation to the Engineer when requested so that values can be verified.

D. The Contractor shall list and maintain separately on the SOV and on any Detailed Progress Schedule all values for items of Equipment that will be submitted for on-site Material payment. These Material items shall not be "progressed" as a part of the physical progress assessment.

E. The Contractor shall prepare a Cash Flow Summary and a corresponding Cash Flow "S" Curve indicating the total dollar amount of Work planned for each month of the Project and shall equate the sum of monthly amounts to the Total Bid Price.

6.01.02. Submittal

A. The Contractor shall submit to the Engineer the detailed SOV that conforms to Table 6-1 as part of its Baseline Progress Schedule and Detailed Progress Schedule Update submittals.

B. The SOV submittals shall include a Cash Flow Summary and a Cash Flow "S" Curve.

6.01.03. Revision

A. All construction Change Order authorizations shall be added to updated and revised Detailed Progress Schedules as cost-loaded activities and shall be coded to appropriate SOV line items. Additional cost documentation shall be provided to the Engineer when requested.

B. The Contractor shall not change the final approved SOV without the approval of the Engineer. The SOV has a one-to-one direct relationship to the list of activities on the Contractor's Progress Schedule. Additions or deletions of activities on the Contractor's Detailed Progress Schedules shall require line item additions or deletions in the SOV. Any revision to the SOV shall be submitted with the monthly Detailed Progress Schedule updates.

6.02. Application for Payment

A. Applications for payment shall be based upon actual progress as measured on the accepted Detailed Progress Schedules and as in the SOV.

6.02.01. Preparation

A. Measurement of Quantities and Percent Complete

1. All Work, except Work based on Time and Materials, shall be paid for at the Contract Price(s) per unit of measurement and shall be measured by the Engineer in accordance with the English system of measurement. Unless otherwise specifically provided, the Engineer shall compute quantities by a method that, in the Engineer's opinion, is best suited to obtain an accurate determination. The weights of metalwork, pipe, and other metal parts to be paid for on the basis of weight shall be determined by the Engineer. The District will not provide scales for weighing Material. The Engineer shall determine the weight of each part or item in the most practicable manner and shall use for that purpose manufacturer weights, or in their absence, catalog weights or estimated weights, in that order; weights of nonmetallic coatings shall be excluded.

2. Progress payments shall be based on percent complete for each applicable cost-loaded schedule activity as determined by visual observation of the Project by the Contractor and by the Engineer on a monthly basis. The schedule activity shall be updated to reflect percent complete. The schedule shall roll up activities to an activity code for each SOV and for each Bid Item.

B. Inclusion of Material On-Site

1. Partial payments may be made by the District to the Contractor for Material and Equipment furnished and delivered to the Project site but not yet incorporated into the Work, at the District's sole discretion, and only if the Material and/or Equipment meet all of the following requirements:

a. Material and/or Equipment are fabricated and/or are manufactured goods or Equipment relatively unique to the Project.

b. The Contractor can transfer clear title to the District.

c. If the Contractor does not have Builder's Risk coverage, the Contractor shall, at no additional cost to the District, (i) insure the Material against theft, fire, loss, vandalism, and malicious mischief; (ii) name the District as additional insured; (iii) deliver this policy or certificate of this insurance to the District; and (iv) receive the District's acceptance of the policy or certificate of insurance. Insurance shall not be cancelable for at least 30 Days;

cancellation shall not be effective until certificate thereof is given to the District.

d. Submittals for the Material and/or Equipment have been favorably reviewed by the District.

e. The Material and/or Equipment have been delivered, identified as property of the District, and physically separated from other Material; protected, properly stored, and maintained at the site in accordance with manufacturer requirements.

2. Only the Contractor's actual cost for Material may be paid prior to inclusion in the Work. The Contractor's actual cost for the Material must be supported by Supplier invoices, proof of payment by the Contractor, and other supporting documentation warranting that the Contractor has received and owns the Material or Equipment free and clear of all liens, charges, security interests, and encumbrances.

3. Material delivered to the site fewer than 30 Days prior to their scheduled incorporation shall not qualify for partial payment consideration.

4. Temporary construction material (e.g. shoring) do not qualify for partial payment.

5. Final payment shall be made only for Material or Equipment incorporated into the Work. Upon Acceptance of the Work, all Material remaining for which advance payments had been made shall revert to the Contractor, unless otherwise agreed; partial payments made for these items shall be deducted from the final payment for the Work.

6. Payment for Material on-site does not relieve the Contractor of its obligations pursuant to the Contract.

6.02.02. Submittal of Application for Payment

A. On the 25th of each month, the Contractor shall prepare and submit the Application for Payment to the District. Each progress pay request is to include payment for Work completed up to and including the 25th of the month. The basis for partial payments of lump sum or other unit Contract items shall be determined by agreement between the Engineer and the Contractor.

B. Each Application for Payment shall be transmitted under the signature of the responsible authorized representative of the Contractor.

C. The Contractor's properly submitted Application for Payment request and request for final payment shall include the following substantiating data:

1. Cover letter identifying:

a. the Project name and Project number;

b. application number and date; and

c. a detailed list of enclosures.

2. Contractor monthly Progress Pay Estimate summary sheet.

   a. The pay request submitted by the Contractor shall contain a source document that provides backup information on how the estimate was prepared.

   b. A source document is defined as the basic document used to record or calculate quantities.

   c. The source document must contain the appropriate Contract Bid Item, the location of the installation, the necessary measurement and/or calculations, and the name of the person preparing the document.

3. Request for payment that meets the criteria listed in 6.02.01.B. Inclusion of Materials On-site.

   a. This form requires a description of each specific Material, quantity, value, and submittal review status substantiating evidence of purchase and cost and a completed affidavit.

4. Certified weekly payroll(s) for the pay estimate period in accordance with the Contract Prevailing Wage requirements.

5. Small/Micro Business Enterprise Utilization Report, if required.

6. Favorably reviewed Detailed Progress Schedule update with Cash Flow Summary and Cash Flow “S” Curve.

7. Daily Extra Work Report Form signed by both the District inspector and by the Contractor’s representative, if applicable.

8. Satisfactory evidence that the Engineer has approved the action taken to correct any Noncompliance Notices and a numbered copy of the noncompliance log.

9. Written acknowledgement by the Engineer that the as-built Drawings have been updated that month.

6.02.03. Review of Application for Payment

A. Upon receipt of a payment request, the District shall review the payment request for the purpose of determining that the payment request is a proper payment request. Any payment request determined not to be a proper payment request

suitable for payment shall be returned to the Contractor no later than seven (7) Days after receipt. A payment request returned pursuant to this paragraph shall be accompanied by a letter citing reasons why the payment request is not proper. The following are examples of an improper payment request:

1. The item of Work requested to be paid was not performed.

2. The Work being requested to be paid has already been paid in previous Progress Pay Estimates.

3. The Work performed and requested to be paid was not done in accordance with the Contract (noncompliance).

4. The quality of the finished product is unacceptable.

5. The source documentation is inaccurate.

6. The Daily Extra Work Reports are not properly filled out.

7. There is a failure to submit an approved SBE Utilization Report, if required.

8. There is a failure to submit any of the Substantiating Documentation in Article 6.02.02. Submittal of Application for Payment.

6.02.04. Payment

A. Payment for all items of Work at the unit or lump-sum price shall be considered as full compensation for furnishing all labor, Material, tools, Equipment, and incidentals necessary to complete the item of Work; no additional payment shall be made. Payment for items of Work called for in the Specifications or shown on the Drawings but that are not separately identified in the Proposal Form shall be compensated as part of the Bid price of one or more of the items that are listed; no additional payment shall be made.

B. Non-Waiver: No progress payment made to the Contractor or the Contractor's sureties shall constitute a waiver of the right to assess Liquidated Damages pursuant to the Contract Documents.

C. The District shall pay within 30 Days valid, undisputed amounts, less any retention, withholds required by law or allowed by this Contract.

D. If the District fails to make any progress payment within 30 Days after receipt of an undisputed and properly submitted payment request from the Contractor, the District shall pay interest to the Contractor equivalent to the legal rate set forth in the Code of Civil Procedure, Section 685.010, subdivision (a).

E. The number of Days available to the District to make a payment without incurring interest pursuant to this Section shall be reduced by the number of Days by which the District exceeds the seven (7)-day return requirement set forth in Article 6.02.03. Review of Application for Payment, paragraph A.

F. Unless otherwise indicated in the Special Provisions, the District shall retain five (5) percent of the estimated value of Work done and five (5) percent of the value of the Material so estimated to have been furnished and delivered and unused as aforesaid and shall pay to the Contractor, while carrying on the Work, the balance not retained as aforesaid after deducting there from all previous payments and all sums to be kept or retained under the provisions of the Contract. No estimate or payment shall be required to be made when, in the judgment of the Engineer, the Work is not proceeding in accordance with the provisions of the Contract, or when, in the Engineer's judgment, the total value of the Work done since the last estimate amounts to less than $1,000. No estimate or payment shall be considered to be acceptance of the Work. All progress estimates and payments shall be subject to correction in the final estimate.

G. Escrow in Lieu of Retention

1. At the request of the Contractor, the District shall permit the substitution of securities or certificates of deposit equivalent to the amount of any monies withheld by the District as above provided. The deposit shall, in that event, be with the District or with a State- or Federal-chartered bank in California as the escrow agent.

2. Alternatively, upon written request of the Contractor, the District shall make payments of the retention as it is earned directly to the escrow agent.

3. The Contractor shall bear the expense of the District and of the escrow agent in connection with the escrow deposit made.

4. Securities or certificates of deposit to be placed in escrow shall include those listed in Government Code Section 16430, bank or savings and loan certificates of deposit, interest-bearing demand deposit accounts, standby letters of credit, or any other security mutually agreed to by the Contractor and by the District. Unless otherwise permitted by the escrow agreement, securities or certificates of deposit to be placed in escrow shall be of a value at least equivalent to the amounts of retention to be paid to the Contractor pursuant to this Section.

5. When the District makes payment of retentions directly to the escrow agent, the Contractor may direct, subject to approval of the District, the investment of the payments into securities.

6. The Contractor shall enter into an escrow agreement satisfactory to the District; this agreement shall be substantially similar to that specified in Public Contract Code Section 22300.

7. The Contractor shall obtain the written consent of the surety to the agreement.

6.02.05. Withholding from Payments

A. The District may, at its option and at any time, withhold progress payment(s) or retain from any amounts due the Contractor sums sufficient to cover for one (1) or more of the following reasons:

1. Stop-Payment Notice Claims filed pursuant to the Civil and Labor Code.

2. Contractor has failed to comply with State law prompt payment requirements with regard to payments to Subcontractors.

3. Third-party claims have been filed or there is reasonable evidence indicating probable filing of these claims.

4. Liquidated Damages due or expected.

5. The Contract sum has been reduced by Change Orders.

6. Damage has occurred to the District or to another Contractor.

7. The Engineer determines that:

a. the Work cannot be completed for the unpaid balance of the Contract sum;

b. if any Contractor's Detailed Progress Schedule forecasts inexcusable late completion, or if the District determines that the Work will not be completed within the Contract Time(s), and that the current unpaid balance and retention will not be adequate to cover actual or Liquidated Damages for the anticipated Delay;

c. the Contractor persistently fails to perform the Work in accordance with the Contract Documents;

d. the Contractor fails to submit timely Change Order cost proposal breakdowns and documentation in accordance with the Contract Documents;

e. the Contractor fails to timely submit the Preliminary Progress Schedules, or Detailed Progress Schedules, or any updates or revisions to those submittals, and reports in accordance with the Contract Documents;

f. the Contractor fails to maintain detailed, timely, updated as-built documents or closeout items.

g. the Contractor fails to submit certified payroll records in accordance with the Contract Documents and prevailing wage requirements;

h. the Contractor has not submitted an approved SBE utilization report;

i. the Contractor fails to submit a proper payment request in accordance with the Contract Documents;

j. the Contractor fails to comply with the submittal requirements requiring rereview of the submittal;

k. the Contractor fails to submit a fully compliant Quality Control Plan;

l. there has been material noncompliance with the insurance requirements; or

m. the Contractor fails to comply with any other requirements of the Contract Documents.

6.03. Final Payment

A. As soon as practicable after completion of the Work, the Engineer shall prepare in writing and furnish to the Contractor the final estimate of the quantities of Work done and all payments due as part of the Contract; this estimate will show deductions for prior payments and any other amounts to be retained or withheld as part of the Contract. The amount determined due, less the amount retained and/or withheld, shall be paid.

B. The retained amount will not be due or payable until 35 Days after the filing of the Notice of Completion of Contract and Acceptance of Work, subject to any withholds required by law or by the Contract.

C. Prior to release of the retained amount, the Contractor shall furnish the District with a release of all Claims by the Contractor against the District arising by virtue of this Contract. The release of Claims may include disputed Contract Claims in stated amounts as the Contractor may specifically exclude from the operation of the release pursuant to acceptance of Final Payment.

Tesla Update 1 received 6/23/09 | Schedule of Values Detail - Chris Saldon | 07-Jul-09 13:19

Cost Account IDs	Activity ID	Activity Name	Original Duration	Start	Finish	Total Float	Budgeted Total Cost	Actual Total Cost	Cost % Complete
Total			609.5d	21-Oct-08 A	16-Dec-11	139.5d	$81,420,562.00	$15,995,442.65	19.61%
1.A.1.1			17.0d	10-Nov-08 A	10-Dec-08 A		$1,120,000.00	$1,120,000.00	100%
1.A.1.1	P101040130	30% DESIGN	15.0d	10-Nov-08 A	10-Dec-08 A		$1,120,000.00	$1,120,000.00	100%
1.A.1.2			30.0d	11-Dec-08 A	23-Feb-09 A		$2,140,000.00	$2,140,000.00	100%
1.A.1.2	P101040150	60% DESIGN	30.0d	11-Dec-08 A	23-Feb-09 A		$2,140,000.00	$2,140,000.00	100%
1.A.1.3			87.1d	11-Dec-08 A	28-May-09 A		$1,240,000.00	$878,500.00	70.85%
1.A.1.3	P101040160	SITE CIVIL DESIGN 90%	30.0d	11-Dec-08 A	23-Feb-09 A		$0.00	$0.00	0%
1.A.1.3	P101040190	ARCHITECTURAL 90%	30.0d	11-Dec-08 A	23-Feb-09 A		$0.00	$0.00	0%
1.A.1.3	P101040250	90% DESIGN	48.0d	24-Feb-09 A	28-May-09 A		$1,240,000.00	$878,500.00	70.85%
1.A.1.4			30.0d	10-Nov-08 A	19-Dec-08 A		$100,000.00	$82,190.23	82.19%
1.A.1.4	P101040100	ONSITE GEOTECHNICAL INVESTIG...	28.0d	10-Nov-08 A	19-Dec-08 A		$100,000.00	$82,190.23	82.19%
1.A.1.5			17.0d	10-Nov-08 A	28-Nov-08 A		$25,000.00	$25,000.00	100%
1.A.1.5	P101040110	POTHOLE RESULTS & SITE SURVE...	15.0d	10-Nov-08 A	28-Nov-08 A		$25,000.00	$25,000.00	100%
1.A.2.1			83.0d	01-Jun-09	26-Aug-09	253.0d	$2,824,000.00	$0.00	0%
1.A.2.1	2A01040100	100% DESIGN	35.0d	01-Jun-09	20-Jul-09	48.0d	$2,500,000.00	$0.00	0%
1.A.2.1	2A01040120	ADDRESS REVIEW COMMENTS & ...	5.0d	20-Aug-09	26-Aug-09	244.0d	$324,000.00	$0.00	0%
1.B.1.1			326.0d	21-Oct-08 A	30-Nov-09	9.0d	$2,217,000.00	$2,155,000.00	49.3%
1.B.1.1	SU02574100	SUBMIT STEEL PIPE & FABRICATE...	0.0d	21-Oct-08 A			$1,000.00	$1,000.00	0.05%
1.B.1.1	SU02574110	SUBMIT STEEL PIPE FABRICATION...	5.0d	03-Dec-08 A	17-Dec-08 A		$1,000.00	$972.00	97.2%
1.B.1.1	PR02574100	PROCURE 144" & 84" HEADERS (S....	115.0d	08-Nov-08 A	18-Jun-09	10.0d	$959,461.00	$932,598.09	97.2%
1.B.1.1	PR02574110	PROCURE 120" & 144" PIPE (S.D. - ...	149.0d	08-Nov-08 A	29-Sep-09	4.0d	$491,674.00	$477,907.13	97.2%
1.B.1.1	PR02574120	PROCURE INLET & OUTLET TIE-IN...	231.0d	08-Nov-08 A	30-Nov-09	9.0d	$296,578.00	$288,245.78	97.19%
1.B.1.1	PR02574130	PROCURE 48" BRANCH PIPING (S....	110.0d	08-Nov-08 A	18-Jun-09	38.0d	$467,287.00	$454,279.00	97.22%
1.B.1.10			0.0d	10-Nov-08 A	10-Nov-08 A		$2,594,444.00	$1,026,157.00	39.55%
1.B.1.10	P101040120	BONDS & INSURANCE	0.0d		10-Nov-08 A		$2,594,444.00	$1,026,157.00	39.55%
1.B.1.2			253.0d	03-Nov-08 A	30-Sep-09	8.5d	$757,077.00	$757,077.00	100%
1.B.1.2	SU15100100	SUBMIT 84" & 144" VALVES (S.D. - ...	5.0d	03-Nov-08 A	12-Nov-08 A		$1,000.00	$1,000.00	100%
1.B.1.2	PR15100100	PROCURE 84" VALVES (S.D. - REQ...	149.0d	08-Jan-09 A	29-Sep-09	4.0d	$251,773.00	$251,773.00	100%
1.B.1.2	PR15100110	PROCURE 144" VALVES (S.D. - RE...	185.0d	25-Nov-08 A	30-Sep-09	8.5d	$504,304.00	$504,304.00	100%
1.B.1.3			202.0d	10-Dec-08 A	15-Jan-10	0.6d	$1,102,273.00	$1,051,281.00	95.37%
1.B.1.3	SU15100110	SUBMIT DeZURIK VALVES (S.D. - R...	5.0d	10-Dec-08 A	15-Dec-08 A		$1,000.00	$1,000.00	100%
1.B.1.3	PR15100120	PROCURE 48" DeZURIK VALVES (S....	150.0d	02-Mar-09 A	15-Jan-10	-25.4d	$550,636.00	$525,306.74	95.4%
1.B.1.3	PR15100130	PROCURE 90",78", 66" & 60" DeZUR...	158.0d	02-Mar-09 A	21-Aug-09	100.5d	$550,637.00	$524,974.26	95.34%
1.B.1.4			265.0d	13-Mar-09 A	05-Apr-10	67.0d	$307,500.00	$0.00	0%
1.B.1.4	SU11288100	SUBMIT CO2 SYSTEM	10.0d	13-Mar-09 A	08-Oct-09	65.0d	$1,000.00	$0.00	0%
1.B.1.4	PR11288100	PROCURE CO2 SYSTEM	110.0d	26-Oct-09	05-Apr-10	65.0d	$306,500.00	$0.00	0%
1.B.1.5			102.0d	29-Sep-09	18-Feb-10	44.5d	$109,680.00	$0.00	0%
1.B.1.5	SU11241100	SUBMIT CHEMICAL TANKS	5.0d	29-Sep-09	06-Oct-09	44.5d	$1,000.00	$0.00	0%
1.B.1.5	PR11241100	PROCURE CHEMICAL TANKS	80.0d	21-Oct-09	18-Feb-10	44.5d	$108,680.00	$0.00	0%
1.B.1.6			244.0d	01-Jun-09	06-May-10	49.0d	$1,289,099.00	$184,500.00	14.31%
1.B.1.6	SU16260100	SUBMIT EMERGENCY GENERATO...	5.0d	01-Jun-09	05-Jun-09	47.0d	$1,000.00	$1,000.00	100%
1.B.1.6	PR16260100	PROCURE EMERGENCY GENERAT...	220.0d	23-Jun-09	06-May-10	47.0d	$1,288,099.00	$183,500.00	14.25%
1.B.1.7			269.0d	23-Dec-08 A	15-Jan-10	-27.4d	$75,605.00	$75,605.00	100%
1.B.1.7	SU13420100	SUBMIT 48-IN MAG METERS (S.D. - ...	5.0d	23-Dec-08 A	26-Dec-08 A		$1,000.00	$1,000.00	100%
1.B.1.7	PR13420100	PROCURE 48-IN MAG METERS (S.D...	200.0d	19-Jan-09 A	15-Jan-10	-25.4d	$74,605.00	$74,605.00	100%
1.B.1.8			117.0d	11-Sep-09	23-Feb-10	53.5d	$128,925.00	$0.00	0%
1.B.1.8	SU11240100	SUBMIT CHEMICAL METERING PU...	5.0d	11-Sep-09	18-Sep-09	53.5d	$1,000.00	$0.00	0%
1.B.1.8	PR11240100	PROCURE CHEMICAL METERING P...	95.0d	05-Oct-09	23-Feb-10	53.5d	$127,925.00	$0.00	0%
1.B.1.9			143.0d	06-Aug-09	23-Feb-10	53.5d	$15,750.00	$0.00	0%
1.B.1.9	SU11247100	SUBMIT CHEMICAL TRANSFER PU...	5.0d	06-Aug-09	13-Aug-09	53.5d	$1,000.00	$0.00	0%
1.B.1.9	PR11247100	PROCURE CHEMICAL TRANSFER P...	120.0d	28-Aug-09	23-Feb-10	53.5d	$14,750.00	$0.00	0%
1.B.2.1.1			357.5d	21-Apr-09 A	03-Nov-10	38.5d	$1,289,346.00	$99,175.00	7.81%
1.B.2.1.1	SW02900100	PLANT TREES & TEMP IRR. SYSTEM	15.0d	06-Oct-10	27-Oct-10	34.5d	$90,000.00	$0.00	0%
1.B.2.1.1	SW02900110	HYDROSEED	4.0d	27-Oct-10	03-Nov-10	34.5d	$16,000.00	$0.00	0%
1.B.2.1.1	SW02200110	PREP ROAD SUBGRADE	10.0d	20-Jul-10	03-Aug-10	34.5d	$155,000.00	$0.00	0%
1.B.2.1.1	SW02520100	CONSTRUCT ROADS TO TOP OF S...	15.0d	17-Aug-10	08-Sep-10	54.5d	$167,500.00	$0.00	0%
1.B.2.1.1	SW02770100	CURBS & GUTTERS	15.0d	03-Aug-10	24-Aug-10	54.5d	$87,446.00	$0.00	0%
1.B.2.1.1	SW02510110	PAVE ROADS	10.0d	31-Aug-10	15-Sep-10	68.5d	$161,331.75	$0.00	0%
1.B.2.1.1	SW01500120	RELOCATE DSL LINE (S.D. - REQUI...	15.0d	21-Apr-09 A	11-May-09 A		$14,900.00	$14,900.00	100%

Page 1 of 11 | TASK filter: Cost Account Only.

© Primavera Systems, Inc.

TABLE 6-1. SCHEDULE OF VALUES SAMPLE

THIS PAGE INTENTIONALLY LEFT BLANK

SECTION 7. SUBMITTAL MANAGEMENT

7.01. Submittal Requirements

A. This Article includes requirements and procedures for preparing and submitting submittals and other information required by the Contract Documents.

B. Drawings listed in the Specifications shall be supplemented by the Contractor with the submittals required throughout the Contract Documents for the prosecution of the Work and for approval of Equipment. Submittals may include shop detail Drawings, fabrication Drawings, falsework and formwork Drawings, pipe layouts, and similar classes of Drawings, calculations, specifications, product data, samples, manuals, spare parts, photographs, survey data, schedules, or similar items required to be submitted to the Engineer by the Contract Documents.

C. These submittals shall be favorably reviewed by the Engineer before any Work involving these submittals is performed. No change shall be made by the Contractor to any submittal after it has been favorably reviewed by the Engineer.

D. Submittals shall contain all required, detailed information at a reasonable scale with enough views to clearly show the Work to be done or the item to be furnished and shall be properly checked.

7.02. Master Submittal List

A. Within 30 Days of the First Chargeable Day of the Contract as specified in the NTP and monthly thereafter, the Contractor shall submit an electronic copy of the Master Submittal List to the Engineer. This list shall be in Microsoft Excel spreadsheet format and shall identify all originally planned submittals. The purpose of this list is to assist in planning for submittal creation and review and to provide a monthly update of submittal review status. Items on this list shall be sorted by Specifications Number and shall include, at a minimum, the following information:

1. Item number.

2. Reference Specification Section number and paragraph.

3. Description of submittal.

4. Type of submittal (e.g., Shop Drawing, catalog, sample, certificate, test data, manual, other).

5. Original preparer of the submittal to include preparer's name, firm name, telephone number, and email address.

6. Estimated date for submission to the Engineer by the Contractor. Dates shall be coordinated with the Contractor's Progress Schedules to ensure sufficient time is allowed for processing submittals and for procurement of

Material prior to the start of a construction activity. The Contractor shall include submittals as activities in the Detailed Progress Schedules.

7. Actual date sent by the Contractor to the District.

8. Actual date returned by the District to the Contractor.

9. Submittal status.

B. The Contractor shall identify in the master submittal list the submittals that may require long-lead times for manufacturing and/or for delivery and that must be submitted early to the Engineer for review.

7.03. Timing of Submittals

A. The Contractor shall make submittals promptly in accordance with the accepted Detailed Progress Schedules and in such sequence as to cause no Delay in the Work. The time allowed by the Contractor for submittal review shall also provide sufficient time for disapproval and resubmission.

B. The sequence of submission of submittals shall be such that all information is available to the Engineer for review of each submittal as it is received. The Contractor is responsible for furnishing submittals in sufficient time for approval action, including resubmittal, without delaying construction.

7.04. Submittal Format

A. One (1) electronic copy and five (5) paper copies of each submittal shall be submitted.

B. All submittals shall be clearly identified by reference to the Project name, Specification Section, Article, paragraph, Drawing number, or detail as applicable. Submittals shall be well organized, clear, and legible, and of sufficient size for clear presentation of the data. Data submitted shall describe the Materials, Equipment, or other items to be furnished, and where applicable, the system in sufficient detail to indicate full compliance with the requirements of these Contract Documents. Data shall consist of complete Materials and Equipment lists accompanied by catalog data sheets, cuts, performance curves, diagrams, or similar descriptive Materials. Materials and Equipment lists shall give, in each case, the name of the manufacturer, trade name, catalog reference, size, finish, and all other pertinent data.

C. All submittals shall be in the English language and per the customary Imperial System units of measure and weight (i.e., feet, inches, pounds, degrees in Fahrenheit, etc.). Metric units may be provided in addition to the customary Imperial System units of measure and weight.

D. All submittals and supporting data, catalogs, schedules, etc., shall be submitted as the instruments of the Contractor, who shall be responsible for their accuracy,

completeness, coordination, and conformance with the Contract Documents. These submittals may be prepared by the Contractor, Subcontractors, or Suppliers; the Contractor shall review and ascertain that submittals meet all of the requirements of the Contract Documents while conforming to structural, space, and access conditions at the point of installation prior to submission to the Engineer. Designation of Work "by others" if shown in submittals shall mean that the Work shall be the responsibility of the Contractor rather than of the Subcontractor or of the Supplier who prepared these submittals. The Contractor shall ensure that there is no conflict with other submittals. The Contractor shall ensure coordination of submittals among the related crafts and Subcontractors.

E. If the submittals show any deviations from the Contract requirements, the Contractor shall include with the submittal a separate written description of such deviations and the reasons therefore. If any deviations from the Contract requirements are not clearly noted and prominently identified on the submittal, the review of the submittal shall not constitute acceptance of such deviations.

F. The Contractor shall review all submittals before submitting them to the Engineer and shall certify on each transmittal letter and on each submittal that the submittal has been checked, is in compliance with the Contract Documents except as specifically noted, and that each deviation from the Contract Documents is specifically noted.

G. Submittals shall include the following:

1. A separate transmittal form shall be used for each specific item, class of Material, Equipment, and items specified in separate, discrete Specification Section or Article, for which a submittal is required. Submittal documents common to more than one (1) piece of Equipment shall be identified with all appropriate Equipment numbers. Submittals for various items shall be made with a single form when the items taken together constitute a manufacturer's package or are so functionally related that expediency indicates checking or reviewing the group or package as a whole. The Specification Section or Article to which the submittal is related shall be indicated on the transmittal form.

2. A sequential number in chronological order shall be assigned for each submittal and shall be noted on the transmittal form. Submittal numbers shall have the following format: XXX.Y, where XXX is the sequential number (001 to 999) assigned by the Contractor; and Y is the re-submittal number (0 to 9). For each item submitted, the Contractor shall include the applicable Specification number on the submittal and on the transmittal form.

3. A separate written description of deviations from the Contract Documents, if any.

4. The date of submission and the dates of any previous submissions.

5. The District's name and the Project title and number.

6. Contractor identification.

7. The names of the following (as applicable):

   a. Subcontractor

   b. Supplier

   c. Manufacturer

8. Identification of the product with the Specification Section or Article number, page, and paragraph(s).

9. Field dimensions clearly identified as such.

10. Relation to adjacent or critical features of the Work or Material.

11. Applicable standards (e.g., ASTM).

12. Identification of revisions on resubmittals.

7.05. Submittals to be Furnished by the Contractor

A. Shop Drawings

1. Shop Drawings include, but are not necessarily limited to, custom prepared data (e.g., fabrication on erection/installation [working] Drawings, scheduled information, setting diagrams, actual shop work manufacturing instructions, custom templates, special wiring diagrams, coordination Drawings, individual system or Equipment inspection and test reports), including performance curves and certifications, as applicable to the Work.

2. Submittal of shop Drawings by simply annotating copies of the Contract Drawings is subject to rejection.

B. Product Data

1. Product data as specified in the individual Section or Article, includes, but is not necessarily limited to, standard, prepared data for manufactured products (sometimes referred to as catalog data or "cuts"), such as the manufacturer's product specification and installation instructions, availability of colors and patterns, manufacturer's printed statements of compliance and applicability, roughing in diagrams and templates, product photographs, standard wiring diagrams, printed performance curves and operational range diagrams, production or quality control inspection and test reports and certifications, mill reports, product

operating and maintenance instructions, recommended spare parts listing, and printed product warranties, as applicable to the Work.

C. Samples

1. Samples specified in individual Sections or Articles, include, but are not necessarily limited to, physical examples of the Work, such as sections of manufactured or fabricated work, small cuts or containers of Material, complete units of repetitively used products, color/texture/pattern swatches and range sets, specimens of coordination of visual effects, graphic symbols and units of work to be used by the Engineer or by others for independent inspection and testing, as applicable to the Work.

D. Concrete Reinforcement Submittals

1. Submittals for concrete reinforcement shall not simply be annotated copies of the Contract Drawings. New scale Drawings shall be prepared showing plans, all vertical structure elevations, sections, and details as required to clearly delineate the reinforcing to be furnished and installed. Submittals shall show and tabulate reinforcement dimensions, sizes, grades, shapes, splices, laps, splice locations, dowel lengths, and all similar information needed for construction, Material takeoffs, and Engineer's review to determine compliance with the structural design. Submittals shall show reinforcement dimensioning and placement that reflect the Contractor's intended and approved concrete placement sequence.

E. Electrical and Instrumentation Equipment Submittals

1. Submittals as described herein shall be provided for all electrical and instrumentation Equipment and systems furnished as part of products and systems specified in these Specifications. These submittals shall include, but are not necessarily limited to, the following:

a. An Equipment list tabulating all components furnished, followed by the manufacturer's name, manufacturer's model number, and a cross-reference to its location on the submittals.

b. A complete conduit riser diagram and conduit schedule shall be prepared and submitted for the interconnection of all electrically powered Equipment. The riser diagram and conduit schedule shall detail conduit identification numbers as shown on the Drawings, as well as size, wires, and location. Where the riser diagram requires either more wires or larger conduits than detailed in the Drawings, the Contractor shall coordinate any required changes with the electrical Subcontractor, if any, before installation begins.

c. Interior and exterior panel elevation Drawings for all panels, consoles, and Equipment enclosures. The elevations shall be drawn to scale and shall detail all Equipment in or on the panel. Nameplates, conduit access locations, mounting provisions, panel construction details, manufacturer's model number, and panel color (or color samples) shall be included.

d. Drawings and descriptive data and brochures of each item of Equipment. Electrical characteristics and requirements, enclosure types, manufacturer, and model number shall be included. Sheets or Drawings showing more than the particular item under consideration shall have crossed out all but the description of the item for which the review is requested.

e. Schematics and connection diagrams. A manufacturer's standard connection diagram or schematic showing more than one (1) scheme of connection shall not be accepted unless it is clearly marked to show the intended, work specific connections; terminal numbers shall be included. A written operation theory shall be included for all complex control schemes.

2. For each instrument furnished with mechanical systems, submittals shall include an Instrumentation, Systems, and Automation Society (ISA) S20 Data Sheet and technical bulletins or brochures. The summary data sheets and the technical bulletins shall include, but shall not necessarily be limited to, the following:

a. tag numbers per the Process and Instrumentation Drawings;

b. the manufacturer's model or other ordering designation;

c. product (item) names used on the Drawings;

d. physical location where installed;

e. input output characteristics;

f. range, size, and graduations as required;

g. physical size with dimensions and mounting details;

h. quantity and quality requirements for electric power, air, and/or water supply;

i. Materials in contact with or otherwise exposed to the process;

j. certified calibration and/or calibration curves where applicable; and

k. Detailed Instrumentation, Systems, and Automation Society (ISA) loop wiring diagrams showing requirements for each instrument that is furnished under this Section. The diagram shall identify all device terminal points, as well as any intermediate terminal blocks. Power supplies, loop grounds, wire/cable number, etc., shall be detailed. Such loop wiring diagrams shall be prepared per ANSI/ISA S5.4. Optional items 1, 3, 4, 6, and 7 from paragraph 5.3 of S5.4 are also required. Note that the District loop numbering protocol used in these documents and required for submittals does not comply with ISA standards.

3. Submittal of motor data for acceptance shall include complete nameplate data in accordance with NEMA Standards and, in addition, the following information for motors typical of the units furnished:

a. Ambient temperature setting.

b. Service factor.

c. Efficiency at ½, ¾, and full load.

d. Power factor at ½, ¾, and full load.

e. Motor outline, dimensions, and weight.

f. Descriptive bulletins, including full description of insulation system.

g. Bearing design data.

h. Special features (i.e., space heaters, temperature detectors, etc.).

7.06. Submittal Review Procedures

A. Review of submittals has as its primary objective the completion of the Work in full conformance with the Contract Documents, unmarred by field corrections and within the construction time provided. In addition to this primary objective, submittal review as a secondary objective shall assist the Contractor in its procurement of Equipment that shall meet all requirements of the Contract Documents; shall fit the structures detailed on the Drawings; shall be completed with respect to piping, electrical, and control connections; shall have the proper functional characteristics; and shall become an integral part of a complete operating facility.

B. For submittals that require the Engineer's review, one (1) copy shall be returned to the Contractor within 20 Days after receipt. The Contractor shall make any necessary corrections and revisions to the returned submittals and shall resubmit the submittals within 20 Days after receipt. The Contractor is responsible for furnishing submittals in sufficient time for approval action, including re-submittal without delaying construction.

C. The Contractor shall be solely responsible for agreement and conformity of submittals with the Contract Drawings and with the Specifications. The review of submittals shall be for general conformance with the design concept and with the Contract Documents. It is expressly understood that the Engineer's review of the Contractor's submittals shall not relieve the Contractor of any responsibility for:

1. accuracy of dimensions and details;
2. coordinating the Work with all other associated Work and trades;
3. selecting fabrication processes;
4. techniques of assembly;
5. departing from details furnished by the Engineer;
6. its obligation to meet safety requirements;
7. its obligation to meet all other requirements of laws;
8. compliance with the Contract requirements; and
9. errors, including details, dimensions, and Material.

D. Favorable review of all submittals (returned "No Exceptions Noted" "In Receipt of" or "Make Corrections as Noted") shall apply in general design only and shall in no way relieve the Contractor of responsibility for errors or omissions contained therein. Favorable review shall not relieve the Contractor of its obligations to meet safety requirements and all other requirements of laws nor shall it constitute a Change Order authorization. Favorable review shall not constitute acceptance by the District of any responsibility for the accuracy, coordination, and completeness of the submittals or for the items of Equipment represented on the submittals, nor shall it constitute a Change Order authorization.

E. If the Contractor submits an incomplete or disorganized submittal, the submittal shall be considered "Rejected" and shall be returned to the Contractor without review. The Engineer may, at its sole discretion, elect to provide a list of, or mark the submittal indicating some or all of, the areas that are incomplete. A complete submittal shall contain sufficient data to demonstrate that items comply with the Contract Documents; shall meet the minimum requirements for submissions cited in the Technical Specifications; and shall include any necessary revisions required for Equipment other than the first named manufacturer. The Engineer's determination of whether a submittal is complete shall be final. The District reserves the right to return a submittal that requires coordination with another or other submittals not yet received by the District.

F. After review by the Engineer of each of the Contractor's submissions, the submittal shall be returned to the Contractor with actions defined as follows:

1. No Exceptions Noted: The favorable review of a submittal is subject to its compatibility with future submissions and with additional partial submissions for portions of the Work not covered in this submission. It does not constitute approval or deletion of specified or required items not shown in the partial submission. The Contractor may proceed with the Work shown in the submittal.

2. Make Corrections As Noted: Same as 1 except that minor corrections as noted shall be made by the Contractor. The Contractor may proceed with the Work, providing corrections have been made; resubmission is not required.

3. Revise and Resubmit: Rejected because of inconsistencies or errors that shall be resolved or corrected by the Contractor prior to subsequent resubmission. The Contractor may not proceed with the Work shown in the submittal.

4. Rejected: Submitted Material does not conform to Drawings and Specifications in major respects (i.e., wrong size, model, capacity, or Material). The Contractor may not proceed with the Work shown in the submittal.

5. In Receipt Of: Receipt of submittal is acknowledged by the Engineer.

G. Resubmittals shall be processed in the same manner as first submittals. On resubmittals, the Contractor shall direct specific attention, in writing on the letter of transmittal and on resubmitted shop Drawings by use of revision triangles or other similar methods, to revisions from previous submissions. Any such revisions that are not clearly identified shall be made at the risk of the Contractor. If any such revisions are installed, all portions thereof that do not fully conform to the Contract Documents shall be corrected by the Contractor at its expense and as required by the Engineer.

H. The favorable review of submittals (returned “No Exceptions Noted” or “Make Corrections as Noted”) shall be obtained from the Engineer prior to the fabrication, delivery, and construction of items requiring submittals.

I. All resubmittals shall be accompanied by a memorandum or letter from the Contractor that responds to each written review comment provided by the Engineer in the previous submittal. Each response shall describe the corrective action taken or reason for the Contractor’s actions.

J. The Contractor shall make a complete and acceptable submittal to the Engineer at least by the second submission. If a returned submittal is required to be resubmitted more than once due to the Contractor’s failure to comply with submittal requirements, the Contractor may be charged all costs associated with rereview of the submittal. The charges may be deducted from a progress payment due, or that will become due, to the Contractor and shall be based on

actual review hours recorded by the Engineer, District staff, and by the Engineer's consultants, multiplied by their actual, fully burdened labor rates.

7.07. Substitutions

A. Substitutions are considered changes to the Contract. If Materials, Equipment, item, means, method, technique, sequence, or procedure of construction is required by the Contract Documents, the Contractor may furnish or utilize a substitute item, means, method, sequence, technique, or procedure of construction acceptable to the Engineer, unless identified as a sole/single-source item. Substitutions shall be formally submitted as a Request for Substitution. The Contractor must submit sufficient information to allow the Engineer to determine whether the substitution proposed is equivalent to that indicated or as required by the Contract Documents.

B. The Engineer shall respond in writing to the Contractor within ten (10) Days indicating the time necessary to evaluate each proposed substitution.

C. The Engineer shall be the sole judge in this matter. In the event the Engineer rejects the proposed items, the Contractor shall submit the Specified Items.

D. No substation shall be ordered, installed, or utilized without the Engineer's prior written acceptance, which shall be evidenced by either a favorably reviewed Request for Substitution, Change Order, or by a DCO. The District may require the Contractor to furnish, at the Contractor's expense, a special performance guarantee with respect to any approved substitution.

E. The Engineer shall record time required by the Engineer, District staff, and by the Engineer's consultants to evaluate substitutions proposed by the Contractor and to make changes in the Contract Documents occasioned thereby. Regardless of whether or not the Engineer accepts a proposed substitution, the Contractor shall reimburse the District for the charges of the Engineer and for the Engineer's consultants for evaluating each proposed substitution.

F. Cost or time impacts to other items of Work that are caused by any Contractor-initiated Request for Substitution, whether anticipated or unforeseen, shall be the responsibility of the Contractor.

G. Request for Substitution: Submission of items that are proposed as equivalent to any other item, means, method, sequence, technique, or procedure of construction shall be evaluated in accordance with the provisions outlined below. Burden of proof as to the submitted items being equivalent to the items required by the Contract Documents is the responsibility of the Contractor.

1. All provisions and evaluation criteria under Article 7.08. "Or Equal" Items, paragraph E in this Article shall apply to the proposed substitutions.

2. No submission of proposed substitutions shall be accepted or considered by the Engineer prior to Contract award.

3. Other additional provisions and/or criteria as deemed necessary by the Engineer.

4. Substitution(s) of Specified Item(s) item, means, method, sequence, technique, or procedure of construction proposed by the Contractor may require modifications in the Project design, Project schedule, and/or in the construction sequencing. The Contractor shall identify all necessary Project modifications required for the substitution(s). Necessary Project modifications may include, but may not be limited to, electrical, instrumentation, structural, mechanical, architectural, testing, engineering costs, and other related modifications.

5. The Contractor shall be responsible for all costs associated with the substitution(s), including submittal reviews and any Project redesign and modification. Contractor refusal to accept any of these costs shall be just cause for disapproval of the substitution(s).

6. If the proposed items are accepted, 50 percent of all savings shall be credited to the District. Total cost savings shall be less any design costs required for substitution(s) implementation.

7.08. "Or Equal" Items

A. Specified Item: Materials, Equipment, product, thing, or service referenced in the Contract Documents that has been identified by one (1) or more specific brand, manufacturer, Supplier, company, catalog number, or trade name. Whenever such designations shall be deemed to be used for the purpose of facilitating the description of the Specified Item and shall be deemed to be followed by the words "Or Approved Equal," whether explicitly stated or not, unless specifically noted to the contrary, in these instances, the Contractor may presume the specific brands are the only product known to the District that meet the requirements of the Contract Documents; the Contractor may propose the provision of Materials or Equipment that are equal to the Specified Item.

B. Equal Item: Item as referenced in these Contract Documents are those that, to the Engineer's knowledge, meet the requirements of the Contract Documents and are considered equal to the Specified Items.

C. The Contractor shall submit sufficient data, Drawings, samples, literature, calculations, and all other information as requested by the District to demonstrate to the Engineer that the proposed items are equal to the Specified Items.

D. Failure of the Contractor to submit the proposed Equal Item for review in the manner and time described in this Article shall be sufficient cause for rejection by the Engineer of the proposed Equal Item.

E. The Engineer's evaluation of the submitted items proposed as being equivalent to the Specified Items is based on, but is not limited to, the following:

1. Performance.

2. Functionality and efficiency.

3. Durability.

4. Life cycle costs.

5. Ease and economy of maintenance and operation.

6. Construction and physical characteristics as compared to the Specified Items or as delineated in the Contract Documents.

7. Dimensional compatibility with the Material it combined to produce a unified design system.

8. Compatibility with products in use.

9. All aspects of finished appearance, including form, texture, and color, that may affect other design elements.

10. Impacts to Project design, construction schedule, or construction sequencing.

F. The Engineer shall be the sole judge in this matter. In the event the Engineer rejects the proposed items, the Contractor shall submit the Specified Items.

G. The Contractor shall submit to the Engineer, in accordance with Public Contract Code Section 3400, after Contract award, no later than 35 Days after the date of NTP, a proposal for replacing a specified item with an equal item. At the sole discretion of the Engineer, the District may give written consent to the submission of the proposed Equivalent Item after the expiration of a 35-day time limit.

7.09. Sole/Single Source

A. No substitution of designated Sole/Single Source items listed in the Contract Documents shall be allowed.

B. Wherever the District has made a finding and specified in the Contract Documents that a Sole//Single Source is required for one (1) or more of the listed reasons stated in the Public Contract Code Section 3400(c), the Material or Equipment specification shall list only one (1) manufacturer, catalog number, or trade name, followed by the designation “No Equal,” “No Others Acceptable,” “No Alternatives Allowed,” “No Other Manufacturers Accepted,” and/or similar language.

SECTION 8. SAFETY AND SECURITY MANAGEMENT

8.01. Public Safety

A. The Contractor shall be solely and completely responsible for conditions of the job site, including safety of all persons and property during the performance of the Work, except from the District's sole negligence or intentional misconduct. The Contractor's compliance with this requirement is not limited to normal working hours.

B. At all times, the Contractor shall provide for public safety and convenience. The Contractor's operations shall be conducted so as to offer the least possible obstruction and inconvenience to the public along with the greatest safety to the public. At no time shall the Contractor have more Work underway than can be prosecuted with proper regard to these considerations to the public.

C. At all times, the Contractor shall provide sufficient measures, such as, but not limited to, fences, barriers, barricades, railings, lights, signs, and any other warning devices and shall provide flagging and guards as are necessary to give adequate warning of any dangerous condition to the public and to reasonably and prudently provide for the greatest public safety and convenience. The Contractor shall comply with all reasonable requirements of the Engineer or public agency having jurisdiction in interpreting this subparagraph.

8.02. Accident Prevention

A. The Contractor is hereby informed that Work on this Project could be hazardous. The Contractor shall instruct all personnel working in potentially hazardous work areas of the potential dangers and shall provide safety Equipment and instruction as is necessary to prevent injury to personnel and damage to property. Special care shall be exercised relative to Work around high-voltage wires, high-pressure gas mains, high-pressure water pipelines, and other utilities. Temporary supports, as required by the utility company, shall be provided by the Contractor to protect utility facilities.

B. The Contractor shall strictly comply with all applicable City, County, and State Rules, Ordinances, Regulations, and Codes, including, but not limited to, CAL OSHA Labor Code Section 6300 et seq. and California Code of Regulations Title 8, Chapter 4. Nothing in these Specifications shall be construed to permit Work not conforming to governing Codes. When Contract Documents differ from governing Codes, the Contractor shall furnish and install the higher standards called for without additional charge. The Contractor shall also take, or cause to be taken, additional measures as may be necessary for the prevention of accidents.

C. The Contractor shall maintain an accurate record of, and shall report to the Engineer in writing, exposure data and all accidents resulting in death, traumatic injury, occupational disease, or damage to property, Material, supplies, or Equipment incident to Work performed under the Contract.

D. If the Engineer notifies the Contractor of any noncompliance with the foregoing provisions, the Contractor shall, after receipt of this notice, immediately take corrective action. If the Contractor fails or refuses to comply immediately, the matter may be referred to the proper authority. No part of the time lost due to any stop order issued by a proper authority shall be made the subject of a Claim for extension of time or for extra costs or damages by the Contractor.

E. Compliance by Subcontractors with the provisions of this Article shall be the responsibility of the Contractor.

8.03. Explosives and Stream Pollution

A. When the use of explosives is necessary for the prosecution of the Work, the Contractor shall not endanger life or property.

B. The Contractor must obtain and comply with permit(s) from all regulatory agencies for the storage and use of explosives.

C. The Contractor must obtain a permit from the California Department of Fish and Wildlife, if required, in advance of the use of underwater explosives. The Contractor shall comply with all applicable requirements of the Fish and Game Code relating to stream pollution, particularly Section 5650.

8.04. Fires

A. The Contractor must obtain and comply with the permit(s) from all regulatory agencies, including from the Bay Area Air Quality Management District (BAAQMD) if required, for fire-related activities.

8.05. Excavation Safety Plans

A. In accordance with Labor Code Section 6705, Miscellaneous safety Provisions, excavations five (5) feet or more in depth shall not begin until the Contractor has submitted, and the Engineer has returned indicating “In Receipt Of,” the Contractor’s detailed plan for worker protection from the hazards of caving ground during these excavations. The plan may be reviewed by the Engineer for completeness in accordance with Federal, State, and Local regulations. The Engineer shall not be responsible for reviewing the accuracy of assumptions, data and information used, and procedures contained in the plan, or for the adequacy thereof. The plan shall show the details of the design of shoring, bracing, sloping, or other provisions to be made for worker protection during the excavations. The plan shall not allow the use of shoring, sloping, or a protective system less effective than that required by the Construction safety Orders. If the plan varies from the shoring system standards established by the Construction safety Orders, the plan (including calculations) shall be prepared, signed, and stamped by a registered Civil or Structural Engineer and by a registered Geotechnical Engineer in the State of California.

B. These plans shall be accompanied by a copy of a Permit to Excavate that has been issued by the Division of Occupational safety and Health as required by Labor Code Section 6500 et seq.

C. This Article shall be applicable regardless of the Contract Price(s).

D. The Contractor's Engineer shall review the adequacy of the Contractor's work methods, Equipment, bracing, or scaffolding, or safety measures, in, on, or near the construction site.

8.06. Tunnel Construction Safety

A. The Contractor shall comply with all applicable requirements of Labor Code Section 7950 et seq. regarding tunnel safety.

B. The Contractor shall notify the California Division of Occupational Safety and Health and the Engineer before any initial construction may be started at any tunnels.

C. The Contractor shall schedule a pre-job safety conference with representatives of the Division, District, employer, and employees before Work begins as required by Labor Code Section 7955. This conference shall include the employer's review of the construction plan and any special Equipment, practices, and potential safety and health problems. The Engineer shall be notified of the time and place of the conference.

D. The District shall obtain the tunnel classification prepared by the Division of Occupational Safety and Health prior to the request for bids, whenever possible, and make it available to the Contractor. A notice of the classification and any special orders, rules, or regulations to be used in construction, remodeling, demolition, or operation of the tunnel or underground mine shall be prominently posted at the site by the Contractor.

8.07. Confined Space Program

A. The Contractor working in or supporting work in a confined space shall have a Confined Space Program.

B. The Contractor shall submit a copy of its confined space program document to the Engineer. The program document shall be in compliance with all requirements of California Code of Regulations Title 8, Sections 1950 – 1962, and other applicable confined space requirements. Entry into a confined space shall not occur until the Contractor has submitted, and the Engineer has returned, indicating "In Receipt of," the Contractor's Confined Space Program document.

C. The Contractor shall ensure that all of its employees and Subcontractors working in or supporting Work in a confined space have received all training mandated by

Cal/OSHA and meet any other Cal/OSHA requirements related to the Work. All entries into confined spaces shall be coordinated with the Engineer.

D. The Contractor shall provide confined-space rescue services for all Work performed in a permit-required confined space and for all entrants to a permit-required confined space regardless of the entrant's employer.

E. All employees of the Contractor or Subcontractor performing rescue services shall have received previous training, as applicable, in (i) atmospheric monitoring and ventilation; (ii) communication; (iii) emergency, self-rescue, and non-entry rescue operations; (iv) permit systems; (v) signs, symptoms, and consequences of exposure to contaminants; (vi) first aid and CPR; (vii) lockout/tagout; (viii) fall protection; (ix) electrical safety; and (x) respiratory protection.

F. The required training as described in Paragraph E above, shall be per established industry standards (i.e., the latest version of ANSI Z117.1, Safety Requirements for Confined Spaces, American National Standards Institute); and per Cal/OSHA regulations (i.e., California Code of Regulations, Title 8, Sections 1960[b] and 5157[k].) All rescue personnel shall also have practiced making permit space rescues at least once every 12 months by means of simulated rescue operations in which they remove dummies, mannequins, or actual persons from actual permit spaces or from representative permit spaces. Representative permit spaces shall, with respect to opening size, configuration, and accessibility, simulate the types of permit spaces from which rescue is to be performed. This training shall have taken place no more than 12 months before the Work to be performed on this Project begins.

G. Prior to the start of Work, the Contractor or any Subcontractor performing Rescue Services, shall submit to the District for review, a Rescue Training Certification (District Form FC 1767) included at the end of this Section, if/when it becomes necessary for District staff to enter a permit required confined space.

H. Prior to entry, the Contractor shall post the most current copy of its Rescue Training Certification form (without its attachments) at the worksite where rescue services are to be provided.

I. The Contractor shall submit an updated Rescue Training Certification form to the Engineer prior to the performance of each rescue service event. In addition, the Contractor shall submit an updated form to include any personnel not previously identified.

8.08. Temporary Facilities

A. Use construction hoists, elevators, scaffolds, stages, shoring, and similar temporary facilities of ample size and capacity to adequately support and move loads to which they will be subjected. Provide railings, kick plates, enclosures, safety devices, and controls required by law or regulation or for adequate protection of life and property.

B. Staging and falsework: Temporary support (e.g., formwork, falsework, or shoring) shall be designed and constructed in accordance with Construction Safety Orders, California Code of Regulations, Title 8, Sections 1541.1 and 1717. The falsework plan, shoring plan, and any required calculations shall be submitted, and the Engineer has returned indicating "In Receipt of," prior to commencement of any associated work on site.

C. Warning devices and barricades: Identify and guard hazardous areas and conditions by visual warning devices, and, where necessary, by physical barriers per Cal/OSHA requirements; by the latest version of the California Manual on Uniform Traffic Control Devices for Streets and Highways (MUTCD); and by State agency permit conditions.

D. Barricades: Place barriers at ends of excavations and along excavations to warn pedestrian and vehicle traffic of excavations. Provide barriers with flashing lights after dark. Keep barriers in place until excavations are entirely backfilled and fully compacted. Barricade excavations to prevent persons from entering excavation areas in streets, roadways, parking lots, or other public or private areas associated with the Project.

E. Temporary enclosures: When sandblasting, spray painting, spraying of insulation, fireproofing, or other activities inconveniencing or dangerous to property or to the health of employees, District staff, or the public are in progress, the area of activity shall be enclosed adequately to contain the dust, over spray, or other hazard. In the event that there are no permanent enclosures of the area or that enclosures are incomplete or inadequate, the Contractor shall provide suitable, temporary enclosures. The Contractor shall submit to the Engineer a temporary enclosure plan for protection of open bodies of water from contamination. Temporary enclosures shall not hinder or adversely affect treatment plant operations.

F. Above-grade protection: On multilevel structures, the Contractor shall provide safety protection that, as a minimum, shall meet the requirements of California Code of Regulations, Title 8 Industrial Relations.

G. Fences: Enclose Work site with fencing adequate to protect the Work as necessary against acts of theft, violence, and vandalism. When entire site or part thereof is to be permanently fenced, permanent fencing may be built to serve as both permanent and temporary protection of the Work site, provided that any damaged or defaced fencing is replaced prior to final acceptance.

8.09. Injury and Illness Prevention Program

A. Work shall not commence until the Contractor has submitted, and the Engineer has returned indicating "In Receipt of," the Contractor's Injury and Illness Prevention Program (IIPP). The IIPP shall comply with Cal/OSHA requirements California Code of Regulations, Title 8, Section 1509 (Construction), Section 3203 (General Industry), and other regulations as applicable. A copy of the

program shall be available at all times at the job site. The Contractor shall designate a Safety Officer who will monitor and enforce the IIPP.

8.10. Safety and Health Program for Hazardous Waste Operations

A. The Contractor shall comply with California Code of Regulations, Title 8, Section 5192 and shall develop and implement a written safety and health program and a site-specific safety and health plan for employees involved in Hazardous Waste operations. The program shall be designed to identify, evaluate, and control safety and health hazards and provide for emergency response for Hazardous Waste operations. In compliance with Title 8, Section 5192, the written safety and health program shall incorporate:

1. an organizational structure;
2. a comprehensive work plan;
3. a Site-Specific Safety and Health Plan;
4. a safety and health training program;
5. a medical surveillance program;
6. the Contractor's standard operating procedures for safety and health; and
7. any necessary interface between general program and site specific activities.

8.11. Site Safety and Health Supervisor

A. The Contractor shall provide a site safety and health supervisor who has the responsibility and authority to develop and implement the site-specific safety and health plan and to verify compliance in accordance with California Code of Regulations.

B. The site safety and health supervisor shall be a qualified and experienced safety and health professional whose sole duty is safety, health, environmental control, and monitoring and who shall be on-site during normal working periods and available 24 hours a day, seven (7) Days a week by telephone or by other approved means. Safety representatives from Subcontractors shall not be substituted for the Contractor's safety representative.

C. The site safety and health supervisor shall meet, at a minimum, the following qualifications: five (5) years of construction project safety management experience on similar projects with OSHA 30-hour certified construction training or certified safety professionals (CSP) with experience in construction-related projects. The safety officer or other competent person shall maintain current training certificates in first aid and in CPR.

8.12. Site-Specific Safety and Health Plan

A. The Contractor shall develop, implement, and verify compliance of a site-specific safety and health plan for Work on this Project.

B. The safety and health plan shall conform to the requirements of all local, state, and federal ordinances, rules, regulations, and guidelines concerning occupational health and safety issues. It shall also include protocol to be utilized in the event unexpected materials or substances are encountered.

C. The safety and health plan shall consist of procedures for the protection of the Contractor's personnel, including Subcontractors, District personnel, consultants, inspectors, and Supplier personnel working with Hazardous Material and the general public from Site-specific hazards.

D. The safety and health plan shall be prepared and signed by a certified industrial hygienist (CIH). The safety and health plan shall identify the site safety and health supervisor who is responsible for the implementation of the plan.

E. Should the types of activities and associated hazards change during the course of work, the Contractor's CIH shall amend the appropriate sections of the safety and health plan to reflect the changed site conditions. The revisions shall address the specific potential hazards to workers and to any others who will be involved in the construction that could result from exposure to the new hazard(s).

F. The Contractor shall keep a copy of the safety and health plan at the job site at all times and shall provide a copy to all personnel working on site. All Contractor personnel performing work on-site shall be required to read the safety and health plan and shall be required to sign an acknowledgment that he/she has obtained and read a copy of the safety and health plan. No worker shall be allowed to perform Work on the site until a copy of his/her signed acknowledgment has been submitted to the Engineer by the Contractor. At a minimum, the safety and health plan shall consist of the following items:

1. Project Organization: To include project manager, project site safety officer, superintendent, forepersons, Subcontractors, any team leaders, and other workers and shall address their roles and responsibilities.

2. Work Plan: Address anticipated Project activities and objectives of the site operations; identify performance tasks for the Project, methods, and activities for accomplishing these tasks, task hazard analysis for each task activity listed in the safety and health plan, personnel requirements, personnel training requirements, and medical monitoring requirements for site personnel.

3. Site Safety Meetings: Include the frequency of the meetings, who will conduct the meetings, time of day meetings will be held, general topics that will be covered at the meetings, and documentation protocol.

4. Employee Training Assignments: Discuss the training elements and the employees who received the training.

5. Review of the Site History for Overall Hazard Characteristics: Discuss physical and health hazards, site characterization, and known and potential exposures to Hazardous Material.

6. Site Control Program: At a minimum, specify the site work zones, site personnel training requirements for each class/type of worker, site protective clothing requirements, safe working practices, and site communication.

7. Personnel Medical Monitoring Requirements: Discuss requirements for each class/type of worker to be on-site and special condition hazards.

8. Personnel Protective Equipment Program: At a minimum, specify selection, personnel training requirements, Equipment storage requirements, Equipment maintenance and repair requirements, Equipment decontamination requirements, and Equipment limitations.

9. Engineering Controls: Specify additional engineering controls to be used for workplace safety, if any.

10. Monitoring: As applicable, at a minimum, specify monitoring methodology, frequency of monitoring, personnel training requirements to monitor, Equipment to be used, Equipment calibration methodology, and documentation protocol.

11. Material Handling: As applicable, specify machinery and Equipment to be used, tools to be used, containers to be used, and personnel training requirements for operators.

12. Decontamination: As applicable, specify procedures for decontamination area construction, personnel decontamination, Equipment decontamination, reinstate control, protective clothing debris control, and decontamination station personnel requirements.

13. Emergency Response Program: At a minimum, specify directions to the nearest medical facility, decontamination procedures for injured workers, and emergency Equipment available on-site.

14. Spill Contamination Contingency Program: Shall include provisions for gases, liquids, and solids.

15. Sanitation Facilities: Identify availability for workers and provisions for different sexes.

16. Illumination: If used during the Project, specify the condition requirements for use, type of illumination to be provided, and illumination locations on site.

17. Confined Space Entry: Discuss personnel protective Equipment, ventilation method and Equipment, illumination method and Equipment, atmosphere testing and Equipment, safety protocol, and documentation protocol.

18. Site Excavation: Discuss types of Equipment to be used, personnel training requirements, safety practices to be utilized, open excavation construction, and personnel entry safety.

19. Safety Inspections: Identify scope of inspections, frequency and time of inspections, personnel qualification of inspector, and communications protocol.

G. The Contractor shall comply with the safety and health plan. Noncompliance with the safety and health plan shall be grounds for temporary suspension of all Work. Suspension of Work for noncompliance shall not be grounds for additional time or compensation.

H. The safety and health plan may be revised and/or amended by the Contractor and the Contractor's CIH as necessary during Work progress and as specified in these Specifications. Revisions and/or amendments to the safety and health plan shall be considered incidental to this item of Work; no additional payment shall be made.

8.13. Safety and Health Plan Implementation

A. Providing for worker safety and personal protection is the Contractor's responsibility and shall be in accordance with the Contractor's safety and health plan. The Contractor is responsible for providing any and all training, monitoring, personal protective Equipment, protective clothing, devices, Equipment, and/or facilities necessary for ensuring worker safety as may be recommended and/or as specified in the Contractor's safety and health plan.

B. The Contractor is responsible for ensuring that its personnel understand and comply with all site health and safety requirements specified in the safety and health plan.

8.14. Submittals

A. This Article summarizes required safety-related submittals. This Article is not intended to be all inclusive. In addition, some submittal requirements specified below may not apply depending on the specific Work under this Contract. Contractor is solely responsible for identifying and submitting to the District and/or to appropriate authorities having jurisdiction all Submittals required by

applicable laws, rules, and regulations. The Contractor shall submit at a minimum the following items:

1. Injury Illness Prevention Program (IIPP): Shall be submitted and favorably reviewed by the Engineer prior to commencement of any Work on site. The District may review or comment on the IIPP. The District's review or comment on the IIPP does not in any way relieve the Contractor of (i) any responsibility or liability for the IIPP, and (ii) being solely, fully, and completely responsible for the safety of all persons and property at the job site.

2. Site-Specific Safety and Health Plan: Shall be submitted and favorably reviewed by the Engineer prior to commencement of any Work on site (if applicable). The District may review or comment on the safety and health plan. The District's review or comment on the plan does not in any way relieve the Contractor of (i) any responsibility or liability for the plan, and (ii) being solely, fully, and completely responsible for the safety of all persons and property at the job site.

3. Names and qualifications (résumés including education, training, experience, and certifications) for the designated site safety and health supervisor and other competent and qualified personnel to be used on the Project in support of job site safety requirements.

4. Completed Activity Hazard Analysis (AHA) or Job Hazard Analysis (JHA) submitted for all significant activities and tasks with a high-risk potential, describing the job steps, hazards associated with each job step, and the controls used to remove or minimize the associated hazards. No hazardous Work shall be allowed without an approved AHA or JHA.

5. Incident Investigation Reports: Submitted to the Engineer within 24 hours of the Project incident.

6. Project-Specific Hazardous Substances Communications Plan: Contractor shall prepare and submit plan and receive favorable review by the Engineer prior to commencement of sitework activities.

7. Safety Meeting Attendance Sheet ("Toolbox" meetings): Submitted to the Engineer within seven (7) working Days of the last working Day of the month.

8. Air Monitoring Results/Reports: Submitted to the Engineer on request (if applicable).

9. Monthly Field Project Report (including man-hours, incident/injury, and property damage reports): Submitted to the Engineer on a monthly basis within seven (7) Days of the last working Day of the month.

10. Heavy Equipment Inspection Forms: Submitted to the Engineer on request (if applicable).

11. Documentation for all Individuals Applicable to Regulatory Medical Surveillance Guidelines and HAZWOPER Training per Cal/OSHA Requirements: Submitted to the Engineer for review prior to beginning any Work associated with these requirements (if applicable).

12. Critical Lift Plans: Submitted to the Engineer on request (if applicable).

13. Crane Inspection Certifications: Submitted to the Engineer on request (if applicable).

14. Crane Operators Certification: Submitted to the Engineer on request (if applicable).

15. Applicable employee training and required medical approval documentation in compliance with Cal/OSHA standards.

16. Copies of detailed and documented quarterly crane inspections conducted by qualified individuals (if applicable).

17. Written crane inspections submitted to the Engineer on a daily basis.

8.15. Security Requirements at Job Site

A. The Contractor shall make adequate provision for the protection of the Work area against fire, weather, theft, and vandalism and for the protection of the public against exposure to injury. All costs arising from theft, fire, or vandalism of the construction Material and Equipment shall be borne by the Contractor.

B. During night hours, weekends, holidays, and during other times when no Work is performed at the site, the Contractor shall provide temporary closures or enlist services of security guards to protect temporary openings.

C. The Contractor shall not allow its staff to stay at the Project site outside of specified hours of Work.

8.16. General

A. The Contractor shall comply with the security requirements specified herein during the entire construction duration. These requirements are not to be construed to relieve the Contractor of its responsibility for the Work as specified in Article 4.11. Contractor's Responsibility for the Work.

B. The Contractor's personnel includes the Contractor's own staff, including, but not limited to, all tiers of Subcontractor staff, manufacturer representatives, technicians, delivery drivers, etc.

8.17. Identification and Badging

A. All Contractor personnel who enter the Project site are required to possess and carry a valid photographic identification. A current driver's license, or identification card issued by the California Department of Motor Vehicles or by other States, or a current passport is considered valid photographic identification. This identification shall be presented to District staff and security guards upon request. Contractor personnel without this identification shall be denied access to or shall be asked to leave the site.

B. The District shall provide Project-specific identification badges for use by Contractor personnel. The District shall issue a photographic identification badge to each person who works at the site for more than five (5) continuous Days and generic (nonphotographic), temporary badges for Contractor personnel who work on an occasional basis (less than five [5] continuous Days.)

C. The Contractor shall submit to the Engineer for approval a list of all Contractor personnel intended to work at the site for more than five (5) continuous Days. The list shall include the name, employer, and work phone number of each person. Upon approval by the Engineer, the Contractor shall complete a District furnished identification badge application for each eligible employee and make arrangements with the Engineer to have Contractor employee photographs taken at the District for the purpose of obtaining District-furnished photographic identification badges. Approved applications and valid photographic identifications shall be required before issuance of District photographic identification badges.

D. Planned, occasional site access. The Contractor shall plan in advance all occasional (less than five [5] continuous Days) site accesses. The Contractor shall notify the Engineer of the name and employer of the Contractor's personnel requiring occasional site access at least one (1) Day in advance of each occasional site access. After sign in, the District's security guard will issue a generic, temporary badge to the occasional visitor. The occasional visitor shall return his/her badge to the security guard upon leaving the site.

E. Emergency or unplanned site access. For emergency or unplanned access, as determined by the Contractor and approved by the Engineer and upon notification by the District's security guard, the Contractor designee shall verify to the District's security guard the identity of the Contractor personnel requiring emergency or unplanned site access. After sign in, the District's security guard will issue a generic, temporary badge to the emergency or unplanned visitor. The emergency or unplanned visitor shall return his/her badge to the security guard upon leaving the site.

F. The Contractor shall ensure that all Contractor personnel display their District issued photographic identification badge or generic, temporary badge in plain view at all times while on-site. Any Contractor personnel who does not display his/her photographic identification badge or generic, temporary badge while on-site shall be required to leave the site.

G. Lost or missing photographic identification badges shall be reported immediately to the Engineer; a generic, temporary badge shall be issued by the District's security guard. The District shall deduct $100 for each lost or missing photographic identification badge from the Contract amount.

H. Lost or missing generic, temporary badges shall be reported immediately to the Engineer; a generic, temporary badge shall be issued by the District's security guard. The District shall deduct $100 for each lost generic, temporary badge from the Contract amount.

I. The Contractor shall maintain a list of Contractor personnel in possession of a photographic identification badge. The Contractor shall record, at a minimum, the following information: employee name, employer, work phone number, badge issuance date, date when employee ceases working at the site, and date when badge was missing, lost, or returned to the District. The Contractor shall submit updated badge lists to the Engineer on or before the fifth Day of each month. The District may deduct from the Contract amount $200 for each badge list not submitted on time. Approved lists shall be the basis for determination of the deductions for photographic badges not returned within the allowed time limit.

J. The Contractor shall collect and return to the District photographic identification badges from all Contractor personnel within 30 Days from the date of their employment termination or when their assignment on-site is complete. If the Contractor fails to return the badges within 30 Days of the employee's termination or assignment completion, the District shall deduct $100 from the Contract amount for each photographic badge not returned on time.

K. At the completion of the Project, the Contractor shall return all District-issued photographic identification badges to the District. The District shall deduct $100 from the Contract amount for each photographic badge unreturned or returned after Project Completion.

8.18. Background Checks

A. The District reserves the right to request and receive this information as allowed by law and as required to complete a background check on any Contractor personnel who must enter the site.

B. The District reserves the right to deny access to the site to any person, as allowed by law.

8.19. Site Access Control

A. The District may maintain a security checkpoint at the gate(s) and facility(ies). The security checkpoint(s) may be staffed by a District security guard during normal working hours, and at other hours, on an as-needed basis. District roving guard(s) may also patrol the property.

B. Unless otherwise specifically required in these Specifications, the entire site perimeter, including all fences and gates, are to remain intact and functional throughout the construction period. Fences and gates that are accidentally breached by the Contractor shall be restored by the Contractor at no additional cost to the District by the end of the workday at the latest. Perimeter breaches shall be secured by the Contractor until the breaches have been closed to the satisfaction of the Engineer. For work requiring perimeter breaches, the Contractor shall work with the Engineer to arrange appropriate measures to secure the perimeter at the Contractor's cost. The Contractor shall promptly inform the District of any accidental perimeter breaches. No unauthorized entries shall be allowed in these breaches, including deliveries and Contractor personnel.

C. All vehicles entering the Project site are subject to search by District guards.

8.20. Mail and Postal Deliveries to the Project Site

A. Unless an exception is granted by the Engineer, the Contractor shall not have United States Postal Service, Federal Express, UPS, or similar mail and package deliveries addressed to any District facility. Under no circumstance shall mail/packages be delivered to the reception area of any District facility.

8.21. Productivity Lost for Noncompliance With Security Measures

A. Costs and delays incurred by the Contractor due to security measures (e.g., deliveries or personnel held at the gate without badges or identification, refusal of package deliveries, etc.) shall not be cause for additional Contract Time(s) or for additional compensation for the Contractor.

B. Failure to comply with these security measures may lead to Delay or to stop of the Work with no additional Contract Time(s) or additional compensation granted to the Contractor.

8.22. Payment

A. Full compensation for doing all Work and furnishing all Material required to comply with site safety and security requirements as specified in these Specifications shall be considered incidental and shall be included in other items of Work; no additional payment shall be made.

Santa Clara Valley Water District

Enter Company Name Here

RESCUE TRAINING CERTIFICATION

FC 1767 (01-31-14)

Contractor shall ensure that all its employees working in or supporting work in a confined space have received all training mandated by Cal-OSHA and meet other Cal-OSHA requirements related to such work.

All employees of the Contractor or subcontractor performing rescue services must have received previous training in **(1)** Atmospheric monitoring and ventilation; **(2)** Communication; **(3)** Emergency, self-rescue, and non-entry rescue operations; **(4)** Permit system; **(5)** Signs; **(6)** First aid and CPR; **(7)** Lockout/tagout; **(8)** Fall protection; **(9)** Electrical safety; and **(10)** Respirator protection.

Rescue services training must have been performed consistent with established industry standards (ANSI Z117.1, Safety Requirements for Confined Spaces, American National Standards Institute and Cal/OSHA regulations). All trained employees must have practiced making permit required confined space rescues at least once every twelve months by means of simulated rescue operations in which they remove dummies, mannequins, or actual persons from actual permit spaces or from representative permit spaces. "Representative permit spaces" must, with respect to opening size, configuration and accessibility, simulate the types of permit spaces from which a rescue could be performed. Such training shall have taken place no more than twelve months before the work to be performed on this Project begins.

With regard to employees of Contractor or any subcontractor performing rescue services, prior to the start of work, Contractor shall submit for review and acceptance by the District all of the following information in the spaces designated below: a certification with the respective employee's name, the name(s) of the trainers, the dates of training, the dates of all rescue practice sessions, and brief descriptions of the rescue practice sessions. Copies of all written materials provided during the training courses or rescue practice sessions shall be attached to this form. **Prior to entry, the Contractor shall post copies of such certifications (without their attachments) at the worksite where rescue services are to be provided.**

PREPARED BY _____ PHONE NO. _____ E-MAIL ADDRESS _____

	EMPLOYEE'S NAME	DATE OF LAST INCLUSIVE TRAINING (1, 2, 3, 4, 5, 6, 7, 8, 9, 10)	DATE OF LAST PRACTICE RESCUE SESSION (ANNUAL)	TRAINER NAME/COMPANY		DESCRIPTION OF THE RESCUE PRACTICE SESSION (BRIEF)	COPIES OF ALL WRITTEN MATERIAL PROVIDED DURING THE TRAINING COURSES OR RESCUE PRACTICE SESSIONS
1							☐ Yes ☐ No
2							☐ Yes ☐ No
3							☐ Yes ☐ No
4							☐ Yes ☐ No
5							☐ Yes ☐ No
6							☐ Yes ☐ No
7							☐ Yes ☐ No
8							☐ Yes ☐ No
9							☐ Yes ☐ No
10							☐ Yes ☐ No

I Certify that the information provided is true and correct:

SIGNATURE _____ PRINT NAME _____ TITLE _____

DATE PREPARED _____ COMPANY ADDRESS _____

THIS PAGE INTENTIONALLY LEFT BLANK

SECTION 9. QUALITY MANAGEMENT

9.01. General Quality Requirements

A. This Section includes quality control (QC) requirements and procedures for Materials, products, Equipment, and workmanship; inspection procedures and limitations; sampling and testing of Materials; and Contractor's quality assurance/quality control (QA/QC) program.

B. The Contractor shall provide and use Construction Equipment and plants capable of producing the quality and quantity of Work required. Construction Equipment shall be identified by readily visible numbers. If ordered, the Contractor shall remove unsatisfactory Construction Equipment and discontinue the operation of unsatisfactory plants.

9.02. District Quality and Environmental Policy Training

A. The following training requirements are minimum requirements. This training is required as part of the District's Quality and Environmental Management System (QEMS) and required for ISO certification. Additional training may be required in accordance with the Special Provisions for environmentally sensitive Projects.

B. The following applies to all Contractor and Subcontractor Project personnel:

1. The Contractor is hereby informed that all supervisory-level personnel must attend QEMS training before Work begins on the Project site. All other Contractor personnel must attend QEMS training within seven (7) Days of beginning Work on the Project site.

2. QEMS training will be administered by the District and will include one (1) 30-minute training session for all staff. It may be necessary to conduct training at the District's headquarters building. All personnel shall sign an acknowledgement that they have attended the subject training.

3. Upon completion of training, personnel will be provided with a QEMS training sticker to be placed on their hard hats. The District may require training on an annual basis.

9.03. Contractor's Quality Control Program

A. The Contractor's Quality Control (QC) program is the successful and systematic execution of a realistic plan to certify that required standards of quality design and construction are met and to preclude problems resulting from poor quality or lack of quality. In performing its QC function, the Contractor develops procedures to manage and control its Material, Equipment, personnel, and work so that the completed Work complies with the Contract requirements. The Contractor, in building to the quality standards in the Contract Documents, controls the quality of the Work.

B. The Contractor shall establish and execute a QC program for services that are procured by the Contractor. The program shall provide the Contractor with adequate measures for verification of and conformance to defined Contract requirements by the Contractor's personnel and lower-tier Subcontractors (including fabricators, Suppliers, and sub-contractors).

C. When required, as stated in the Special Provisions the Contractor shall submit to the Engineer a Project-specific QC plan. The QC plan shall contain a comprehensive account of the Contractor's QC procedures as applicable to this Work. Detailed requirements for this QC plan are delineated in the following paragraphs. The Engineer's review of the Contractor's QC plan shall not relieve the Contractor from any of its obligations for performing the Work. No Work shall start until the Contractor's QC plan has been favorably reviewed by the Engineer. No payments shall be made to the Contractor until the QC plan is favorably reviewed by the Engineer.

D. The QC Plan shall demonstrate that it has qualified QC personnel who meet or exceed the requirements of Special Provisions Article 20.04.02. Contractor's Quality Staffing Requirements. The QC plan shall identify the independent testing firms to be used in accordance with Article 9.09. Testing.

E. The Contractor's QC program shall ensure the achievement of adequate quality throughout all applicable areas of the Contract. The QC plan shall describe the program and include procedures, work instructions, and records. In addition, the Plan shall describe methods relating to areas that require special testing and procedures as noted in the Specifications.

F. Identification and Control of Items and Material: Procedures to ensure that items or Material that have been accepted at the site are properly used and installed shall be described in the QC plan. The procedures shall provide for proper identification and storage and prevent the use of incorrect or defective Material.

G. Inspection and Tests: The Contractor shall have written procedures and checklists defining a program for control of inspections performed; these procedures and checklists shall be described in the QC plan. Procedures shall include specific instructions for observing all Work in process and for comparing this Work with the Contract requirements (organized by Specification section), precluding the covering of deficient or rejected Work, halting or rejecting Work, and resolving differences between the Field QC Representative(s) and the production representative(s).

H. A complete matrix listing all operational, performance, and QC tests and inspections required in the Contract Documents: Each entry in the matrix shall include the Specification Section and paragraph; test/inspection description; procedure used; on/off-site; test frequency and acceptance criteria; and testing firm conducting each test. Below is a sample showing one (1) particular test:

Test and Inspection Plan Table

Spec Section	Test/Inspection Description	Procedure Used	On/Off site	Frequency	Acceptance Criteria	Conducted by	Documentation /Report	Notes
15453. 3.04.B	Hydraulic Pressure Test	15453. 3.04.B	On	After leak test, 2 hours	30 ft	John Smith	Hydro-test Report	

I. The QC plan shall identify all contractual hold/inspection points, as well as any Contractor-imposed hold/inspections points.

J. The QC plan shall include procedures to provide verification and control of all testing provided by the Contractor.

K. Supplier Quality Control (SQC): The QC plan shall include procedures to ensure that procured products and services conform to the requirements of the Specifications. This plan shall include periodic visits to the place of manufacture by the Contractor to perform QA activities. The District shall be notified of all such SQC visits a minimum of two (2) weeks in advance in case it elects to attend the visit. Requirements of these procedures shall be applied as appropriate to lower-tier Suppliers and/or to Subcontractors.

L. Deficient and Nonconforming Work and Corrective Action: The QC plan shall include procedures for handling deficiencies and non-conformances. Deficiencies and non-conformances are defined as documentation, Drawings, Material, Equipment, or Work not conforming to the contractually specified requirements or procedures. The procedures shall prevent non-conformances by identification, documentation, evaluation, separation, disposition, and corrective action to prevent recurrence. Conditions having adverse effects on quality shall be promptly identified and reported to the Contractor's senior-level management and to the Engineer. The cause of conditions adverse to quality shall be determined and documented and measures implemented to prevent recurrence. In addition, at a minimum, this procedure shall address:

1. Personnel responsible for identifying deficient and non-complying items within the Work.

2. The manner/process and the name of personnel by which deficient and noncompliant items are documented "in the field."

3. The personnel and process utilized for logging deficient and noncompliant work into a deficiency log at the end of each Day.

4. Tracking processes and documentation for deficient and noncompliant items.

5. Personnel responsible for achieving resolution of outstanding deficiencies.

6. Once resolved, the manner/process by which the resolutions are documented and by whom.

M. Special Processes and Personnel Qualifications

1. The QC plan shall include detailed procedures for the performance and control of special processes (e.g., welding, soldering, heat treating, cleaning, plating, nondestructive examination, etc.).

2. Personnel performing special process tasks shall have experience, training, and certifications commensurate with the scope, complexity, or nature of the activity. The Contractor shall submit personnel qualifications information to the Engineer before the start of Work on the Project.

N. The Contractor's QC staffing is subject to the Engineer's continued review. The Engineer, at its sole option and without cause, may direct the Contractor to remove and replace the Field QC Representative.

O. Audits: The Contractor's QC program shall provide for documented audits on a quarterly basis to verify that QC procedures are being fully implemented by the Contractor as well as by its Subcontractors and Suppliers. Audit records shall be submitted to the Engineer within five (5) business Days after an audit.

P. The Engineer may perform independent QA audits to verify that actions specified in the Contractor's QC plan have been implemented. No Engineer audit finding or report shall in any way relieve the Contractor from any requirements of this Contract.

9.04. Quality Coordination Meetings

A. The Contractor shall provide, at a minimum, five (5) working Days' advance notice and shall participate in the following three (3) QC coordination meetings. Minutes for each meeting shall be prepared by the Contractor's Field QC Manager and submitted to the Engineer. The meetings shall be mentioned in the Contractors daily inspection report with the minutes attached:

1. Pre-submittal Conference

a. Prior to the Contractor's submittal of the QC plan, the Field QC Manager, its Superintendent, and other relevant personnel shall convene a QC coordination conference with the Engineer to review and discuss the QC plan. During the conference, mutual understanding of the QC plan requirements should be developed.

2. Preparatory Meeting

a. Thirty (30) Days prior to beginning Work on each Definable Feature of Work (e.g., ceramic tile, fencing and gates, masonry, rough-in electrical, etc.), the Contractor's Field QC Manager, Superintendent, other Contractor QC personnel (as applicable), and the foreman responsible for the Definable Feature of Work

shall meet with the District Engineer. The meeting shall cover the following agenda, with minutes documented by the Contractor's Field QC Manager.

1) Review the Contract Plans and Specifications.

2) Review reference Codes and Standards.

3) Confirm that all required submittals have been approved.

4) Review relevant RFIs, field memos, and changes to the design of the Definable Feature of Work.

5) Review QC requirements for the Work, including inspection, testing, and acceptance and tolerance requirements.

6) Review critical installation procedures and quality compliance.

7) Examine Work area to assure that all required predecessor Work has been completed, that all required deficiencies have been corrected and approved, and that all documented, remaining deficiencies shall not impair the construction of the planned Definable Feature of Work.

8) Check availability of required resource and Equipment to perform the Work.

9) Review Activity Hazards to address safety precautions.

10) Determine commencement of the initial meeting.

3. Initial Meeting

a. One (1) workday before the beginning of construction of a Definable Feature of Work, the Contractor's Field QC Manager, Superintendent, other CQC personnel (as applicable), and the foreman responsible for the Definable Feature of Work shall meet with the Engineer. The meeting shall cover the following agenda, with Minutes documented by the Contractor's Field QC Manager.

1) Review minutes of the preparatory meeting.

2) Verify specified Material and Equipment is on-site.

3) Establish level of workmanship and verify that it meets minimum acceptable workmanship standards.

4) Compare with required samples and mockups as appropriate.

5) Verify adequacy of QC for the Work, including availability of test Equipment.

6) Resolve all differences.

7) Indicate exact location of initial phase in the minutes for future reference and comparison with follow-up phases.

8) Repeat the initial phase for each new crew to work on-site or any time accepted or specified quality standards are not met.

9.05. Documented Quality Control Records

A. The Contractor shall establish control methods of Contract Documents that describe how Drawings and Specifications are received and distributed to assure the correct issue of the document is being used. The methods shall also describe how as-built data are documented and furnished to the Engineer.

B. The Contractor shall maintain evidence of activities affecting quality, including operating logs, records of inspections and tests, audit reports, Material analyses, personnel qualification and certification records, procedures, and document review records.

C. Quality records shall be maintained in a manner that provides for timely retrieval, and traceability. Quality records shall be protected from deterioration, damage, and destruction.

D. The Contractor shall provide a list of QC records as specified in the Contract Documents that will be furnished to the Engineer at the completion of activities.

9.06. Inspection and Daily Reports

9.06.01. Inspection

A. The Contractor shall utilize qualified individuals to perform and document inspections and tests. At a minimum, “qualified” shall mean having performed similar QC functions on similar-type projects. Records of personnel experience, training, and qualifications shall be maintained and made available for review by the Engineer upon request.

B. The Engineer shall at all times have access to the Work during its construction and shall be furnished with every reasonable facility for ascertaining that the Material and the quality of performance are in accordance with the requirements and intentions of the Drawings and Specifications. All Work done shall be subject to the Engineer’s inspection as well as by external parties.

C. The day-to-day inspection performed by the various inspectors employed by the District shall not constitute approval or ratification of Work improperly done by the Contractor. The Engineer is the only person authorized to recommend acceptance of Work and Material.

D. The presence or absence of an inspector during performance of the Work shall not relieve the Contractor of any obligation to fulfill the Contract. It shall be the duty of the Contractor to see that all provisions are complied with in detail, irrespective of the inspection given the Work during its progress by the Engineer or by representatives of the Engineer. The District and the Engineer shall assume no responsibility for any plan or method suggested to the Contractor by the Engineer or by an inspector that is not specified or required. Any such suggestion shall be used at the risk and responsibility of the Contractor.

E. Inspection does not waive or alter the requirements or provisions of the Contract Documents. Inspection of the Work or receipt of payment shall not relieve the Contractor of its obligation to fulfill all conditions of the Contract; improper Work shall be subject to rejection.

F. No portion of any Work, installed Material, products, or Equipment shall be covered or concealed in any manner without first being inspected by the Engineer. Whenever the Contractor is ready to backfill, bury, cast in concrete, hide, or otherwise cover any Work under this Contract, the Contractor shall notify the Engineer not less than one (1) Work Day in advance to request inspection before beginning any such Work of covering. Failure of the Contractor to notify the Engineer at least one (1) Work Day in advance of any such inspections shall be reasonable cause for the Engineer to order a sufficient Delay in the Contractor's schedule to allow time for such inspection. If any Work, Material, products, or Equipment is covered prior to inspection or prior to the express approval of the Engineer, that Work, Material, products, or Equipment shall be uncovered at no additional cost to the District. All associated costs, including its impact on other portions of the Work, shall be borne by the Contractor.

G. The Contractor shall not conceal any part of the Work until record Drawing information has been taken and recorded by the Contractor.

H. Should it be considered necessary or advisable by the District at any time before acceptance of the entire Work to make an examination of Work already completed by removing or tearing out same, the Contractor shall, on request, promptly furnish all necessary facilities, labor, and Material. If such Work is found to be defective or nonconforming in any material respect due to the fault of the Contractor or of Subcontractors, the Contractor shall defray all of the expenses of this examination and of satisfactory reconstruction. If, however, the Work is found to meet the requirements of the Contract, an equitable adjustment shall be made in the Contract Price(s) to compensate the Contractor for the additional services involved in the examination and reconstruction, and if completion of the Work has been delayed thereby, the Contractor shall, in addition, be granted a suitable extension of time.

I. Work, Material, products, and Equipment not conforming to the Contract Documents shall be considered defective and shall be corrected or removed and replaced with conforming Work, Material, products, and Equipment at no additional cost to the District.

9.06.02. Daily Inspection Reports

A. The Contractor is required to submit a daily QC inspection report providing factual evidence that required QC activities and/or tests have been performed. These records shall include the Work of Subcontractors and Suppliers and shall be on a form acceptable by the Engineer. Reports shall be made available at the end of each work day or no later than prior to the beginning of the next work day. Such reports shall, at a minimum, include the following:

1. Item(s) inspected.

2. Quality characteristics in compliance.

3. Quality characteristics not in compliance.

4. Corrective/remedial actions taken.

5. Statement of certification.

6. Field QC Representative's signature.

7. Contractor/Subcontractor and its/their area of responsibility.

8. Test and/or control activities performed with results and references to Specification/Drawing requirements.

9. Test reports as attachments.

10. Contractor's completed QC checklists, where applicable.

11. Records of any SQC reports performed off-site as an attachment.

12. Any Noncompliance Notices (NCN) issued.

    a. An NCN shall be issued to document defective Work.

    b. Corrective Action Reports (CAR) shall be completed to close out an NCN. An NCN may not be closed until the CAR is accepted by the Engineer.

    c. A log of the NCN and the corresponding CAR shall be published at the end of each month.

13. A Contractor's verification statement stating that each daily report is a complete, true, and accurate account of that Day's construction activity.

a. These records in report form shall be prepared daily. The records shall be available in the field within 24 hours after the date covered by the report for review by the Engineer; all reports for that week shall be submitted weekly to the Engineer.

b. Reports need not be submitted for Days on which no Work is performed. At a minimum, one (1) report shall be prepared and submitted for every seven (7) Days of no Work and on the last Day of a no-Work period. All Days shall be accounted for throughout the life of the Contract. The first report following a Day of no Work shall be for that Day only.

c. Reports shall be signed and dated by the Contractor Field QC Manager. The report from the Contractor Field QC Manager shall include copies of reports prepared by all subordinate QC personnel.

9.07. Plant Inspection

A. Material and Equipment that become a part of the completed Work shall be subject to inspection at the place of production or manufacture, at the shipping point, or at the site of the Work. Material and Equipment requiring inspection at the place of production or manufacture shall be designated by the Engineer. Where plant inspection is so designated, the Engineer shall be given a 14-day advance notice of the start of manufacture or of production. For international locations and sites outside of the continental United States, a minimum notification of 30 working Days shall be provided. The Contractor's purchase orders for Material and Equipment, for which plant inspection has been designated by the Engineer, shall bear a suitable notation advising Suppliers and Subcontractors of inspection requirements.

B. If the required notification is not given, the District shall schedule the inspection at its convenience, and the activity to be witnessed shall not proceed until the Engineer arrives or until the District notifies the Contractor that it is choosing to waive its witness inspection requirement.

C. The Engineer or an authorized representative shall have free entry at all times to such parts of the plant as concerns the manufacture or production of Material and Equipment for the District. Adequate facilities shall be furnished free of charge to make the necessary inspection.

D. The Engineer may attend scheduled inspections of the off-site plant for Material, Equipment, or software to be incorporated into the Work. The District assumes no obligation to inspect Material or Equipment at the place of manufacture or production or at the shipping point. Unless otherwise noted in the Special Provisions, cost for District representatives to attend off-site inspections shall be borne by the District.

E. In the absence of the Engineer, the District may reject the processes completed to date and require the activity to be redone. Delays resulting from waiting on the witness inspection for the reasons given above shall be considered an Inexcusable Delay. Expenses incurred by Delays or repeat of the Work process shall be borne by the Contractor.

F. Should any inspection attended by the Engineer be delayed, the Contractor shall reimburse the District for the actual salary costs of District staff, consultants, and special inspection firms multiplied by their actual, fully burdened labor rates and shall reimburse the actual cost of other direct costs incurred due to the inspection Delay.

G. The Contractor shall provide safe passage and access for inspection of the Work in any area. Off-site storage areas and warehouse facilities are also subject to inspection.

H. Material, products, and Equipment that are specified to require testing and inspection at the point of origin shall receive and pass such testing and inspection prior to being shipped to the Project site.

9.08. Sampling of Material

A. The Contractor shall furnish samples of Material as specified and as requested by the Engineer at no additional cost to the District. Samples shall be obtained and tested whenever necessary to determine the quality of the Material and compliance with the Contract Documents.

B. The Contractor shall assist the Engineer, District staff, regulatory agency personnel, and third parties in collecting or providing samples.

C. The Contractor shall not use Material specified to be tested in the Work until such testing indicates satisfactory compliance with the Contract Documents.

9.09. Testing

A. Unless otherwise specified, the Contractor is responsible for completing all required testing at no additional cost to the District. All tests shall be performed by independent testing firms accredited by the appropriate authority.

B. The testing firm shall be staffed with experienced personnel, properly equipped, and fully qualified to perform the tests in accordance with the specified standards. The Contractor shall submit documentation demonstrating that the testing firm and its personnel are properly accredited by the appropriate authority.

C. The Engineer has the right to inspect Work performed by the independent testing firm. This may include inspection of the independent testing firm's internal QA records (e.g., QA manual, equipment calibrations, proficiency sample performance, etc.).

D. Testing shall be completed in accordance with the specified standards in effect on the date bids are due. Where no standard is specified, testing shall be completed in accordance with the applicable ASTM and/or the latest published edition of the *State of California Department of Transportation Standard Specifications and Standard Plans* and updates thereto.

E. The Contractor shall submit copies of all manufacturer test reports performed to satisfy the applicable Material standard specification or test standard (e.g., certified mill test reports). Reports shall identify the lot of Material represented by the test. The manufacturer test reports supplement the inspection, sampling, and testing provisions otherwise required by the Contract Documents.

F. Content of Test Reports: Inspection and test results shall be documented and evaluated to ensure that requirements have been satisfied. Individual test records shall contain the following information:

1. Date and time of test.
2. Item tested, item number, and item description.
3. Test designation.
4. Test work sheet, including location the sample was obtained.
5. Test results.
6. Acceptance or rejection.
7. Retest information, if applicable.
8. Control requirements.
9. Tester signature.

G. The Contractor shall immediately inform the Engineer of all test results.

H. Availability and Submittal of Test Reports: All test reports shall be made available to the District's representative for viewing within 24 hours and must be submitted to the Engineer within seven (7) Days after each test is completed, with the Contractor's weekly inspection reports. Each test report for each type of test shall be consecutively numbered. The Contractor shall maintain a copy of all test results on-site.

I. Control of Measuring and Test Equipment: Measuring and/or testing instruments shall be adequately maintained, calibrated, and adjusted to maintain accuracy within prescribed limits. Calibration shall be performed at specified periods against valid standards traceable to nationally recognized standards and documented.

9.10. District Quality Assurance

A. Quality assurance (QA) involves the activities of the District that are separate from, but in coordination and cooperation with, the Contractor to monitor that the level of quality set by the Contract Documents is achieved. Through periodic review, inspections, and tests, the District monitors that the Contractor's QC is working effectively and that the end product complies with the level of quality established by the Contract.

9.10.01 Testing by the District

A. The District may arrange for independent tests at its own cost. In such cases, the Contractor shall cooperate with the District's independent testing firm. This testing by the District shall not relieve the Contractor of its obligation to do the QC testing required under the Contract.

B. If independent testing indicates noncompliance with the Contract Documents, any retesting shall be charged to the Contractor.

C. Upon request, the Engineer will furnish the Contractor with copies of test results.

9.10.02 Defective Work

A. All Work not conforming to the Contract shall be considered defective and subject to rejection by the Engineer regardless of when or where the deficiency is detected. Unless otherwise permitted by the Engineer, rejected Work shall be remedied, removed, or replaced by the Contractor in a manner acceptable to the Engineer and at no additional cost to the District.

B. Noncompliance Notice (NCN): The Engineer may issue a NCN to the Contractor for any detected defective Work or a portion thereof.

C. The Contractor shall provide a written response within five (5) working days after receipt of the NCN. The Contractor's response shall detail either (i) reasons it believes that the Work was performed in accordance with the Contract Documents; or (ii) the corrective action it intends to take to correct the defective Work.

D. If the Contractor disputes issuance of the NCN, the Engineer shall respond after receipt of the dispute by either (i) withdrawing the NCN; or by (ii) directing the Contractor to correct the Work. If the Engineer directs the Contractor to correct the Work, the Contractor shall make such correction within five (5) working days after receipt of such direction from the Engineer or at such other time as may be agreed to with the Engineer.

E. If the Contractor fails to promptly comply with any order of the Engineer to correct the defective Work, the Engineer may terminate the Contractor's right to proceed with the affected Work and cause the defective Work to be removed and replaced at the Contractor's expense.

1. The District shall deduct from the Contractor's progress payment any cost it incurs in correcting the defective Work, including, but not limited to, rectifying the nonconforming Work, removing and storing salvageable Material and Equipment, discarding other Materials and Equipment, administrative costs, and all costs of repair or replacement of the Work of others.

2. If the District self-performs the remediation of the Contractor's nonconforming Work, the Contractor shall also be charged for the District's overhead markup.

3. If the current Contract unpaid balance and retention are insufficient to cover this amount, the Contractor shall reimburse the District.

9.11. Plumbing and Piping Quality

A. The Contractor shall consult with industry and manufacturer representatives for all piping Material being used in the Work. The purpose of this consultation is to ensure that the Contractor's personnel are fully trained and knowledgeable, possess written instructions on proper assembly, and have all recommended tools for quality Work. Consultation shall also include discussions between industry and manufacturer representatives and Contractor management and construction staff on the causes of past plumbing and piping failures and of problems and methods of avoidance. The Contractor shall provide training for its forces as required to produce consistent, high-quality Work without failed tests and warranty problems.

9.12. Control of Materials and Equipment

A. This Article includes general product requirements and requirements for delivery, storage, packing, loading, unloading, transportation, protection, and selection of Material and Equipment. Additional specific requirements for delivery, handling, protection, loading, and unloading may be specified within the Technical Specifications for Materials and Equipment.

B. The Contractor shall furnish Materials and Equipment as specified. Only new Material and Equipment conforming to the requirements of the Contract shall be incorporated in the Work.

9.12.01. Source of Material and Equipment

A. The Contractor shall furnish a list of sources of Material and Equipment to the Engineer in sufficient time to permit proper inspection and testing of Material and Equipment in advance of their use. Inspection and tests shall be made and reports rendered. It is understood that such inspections and tests shall not be considered a guarantee of acceptance of any Material or Equipment that may be delivered later for incorporation in the Work. Any Equipment or Materials that, after has in any way become non-compliant with the Contract, shall not be used in the Work.

B. At the option of the Engineer, the source of supply of each of the Material shall be approved before the delivery is started. All Material proposed for use may be inspected or tested at any time during their preparation and use. If it is determined that sources of supply that appeared satisfactory do not furnish a uniform product, or if the product from any source proves unacceptable at any time, the Contractor shall furnish approved Material from other sources.

9.12.02. Product Data and Samples

A. The Contractor shall furnish without charge such samples as may be required.

B. No Material or Equipment shall be delivered to the Work without prior approval of submittals by the Engineer.

C. The Contractor shall provide products by the same manufacturer when products are of similar nature, unless otherwise specified; provide identical products when products are required in quantity; and provide products with interchangeable parts whenever possible.

D. The Contractor shall require each Equipment manufacturer to have maintenance facilities meeting the following minimum requirements:

1. Minimum three (3) years' operational experience.

2. Located in the continental United States.

3. Equipment and tools capable of making repairs.

4. Staff qualified to make repairs.

5. Inventory of maintenance spare parts.

E. All Materials, products, and Equipment shall be new, of the specified quality, and free of defects. Where samples have been submitted, the Materials, products, and Equipment incorporated into the Work shall be equal to the samples that have been approved. Should Materials, products, and Equipment required by the Work not be specified or described on the Drawings, the Contractor shall provide Materials, products, and Equipment of high, generally accepted quality standards that are comparable to the Work and that meet the identifiable needs of the Work.

9.12.03. Transportation and Delivery

A. The Contractor shall:

1. Transport and handle items in accordance with manufacturer's instructions.

2. Schedule delivery to reduce long-term, on-site storage prior to installation and/or operation. Under no circumstances shall Equipment be delivered

to the site more than one (1) month prior to installation without written authorization from the Engineer.

3. Coordinate delivery with installation to ensure minimum holding time for items that are hazardous, flammable, easily damaged, or sensitive to deterioration.

4. Deliver products to the site in the manufacturer's original sealed containers or other packing systems, complete with Material Safety Data Sheets (MSDS) and instructions for handling, storing, unpacking, protecting, and installing.

B. The Contractor may store Material and Equipment only in those locations approved by the Engineer. The Contractor is responsible for maintaining and restoring any affected areas as required by the Engineer.

C. All items delivered to the site shall be unloaded and placed in a manner that shall not (i) impact the Contractor's normal construction operation or those of Subcontractors and other contractors; (ii) interfere with the flow of necessary traffic; and (iii) interfere with the District's normal operations and maintenance activities. In addition, the Contractor shall:

1. Provide necessary Equipment and personnel to receive, accept, and unload all items delivered to the site.

2. Promptly inspect the shipment to assure that products comply with requirements, quantities are correct, and items are undamaged. For items furnished by others (i.e., the District, other Contractors), perform inspection in the presence of the Engineer and shall notify the Engineer verbally and in writing of any problems.

9.12.04. Storage and Protection of Material

A. Store and protect products in accordance with the manufacturer's instructions with seals and labels intact and legible.

B. Material and Equipment shall be stored to ensure preservation of quality and fitness for the Work. They shall be placed under cover when necessary and shall be stored in a manner that will facilitate prompt inspection.

C. Loose granular Material shall be stored on solid, flat surfaces in a well-drained area. Mixing with foreign matter shall be prevented.

D. Cement, lime, and similar moisture-sensitive Material shall be stored under a roof and off the ground and shall be kept dry at all times. All structural, miscellaneous, and reinforcing steel shall be stored off the ground or to otherwise prevent accumulation of dirt or grease and in a position to prevent accumulation of standing water and to minimize rusting. Beams shall be stored with the webs vertical. Precast concrete shall be handled and stored in a manner to prevent

accumulation of dirt, standing water, staining, chipping, or cracking. Brick, block, and similar masonry products shall be handled and stored in a manner to reduce breakage, cracking, and spilling to a minimum.

E. Material and Equipment storage areas shall be suitably secured to protect Material and Equipment from damage or from theft.

F. Except as stated in the Contract Documents or as otherwise approved by the Engineer, locations and arrangements for storage sites for Material and Equipment shall be selected and maintained by the Contractor at the Contractor's expense. Full compensation for furnishing such storage sites as may be necessary or as required by the Contractor shall be considered as included in the Bid price; no additional payment shall be made.

G. The storage and handling of potential pollutants and Hazardous Material, including, but not necessarily limited to, gasoline, diesel, oils, paint, and solvents shall be in accordance with all Federal, State, and Local Laws and all other requirements. Temporary special storage enclosures, double-walled tanks, berms, or other protective facilities shall be provided as required by law. All Hazardous Material shall be stored and handled in strict accordance with the MSDS for each product. A copy of each MSDS shall be maintained at the Project site by the Contractor.

H. Any Equipment or Materials that, in the opinion of the Engineer, has become damaged as to be non-compliant with the Contract shall be promptly removed from the site of the Work. The Contractor shall receive no compensation for the Materials or Equipment removed or for removal costs.

9.12.05. Maintenance and Protection of Installed or Stored Equipment

A. All mechanical and electrical Equipment and instruments subject to moisture or corrosive damage by the atmosphere if stored outdoors (even though covered) shall be stored in a weather-tight building and provided with adequate ventilation, as required, to prevent damage. The Contractor shall maintain temperature and humidity within the range required by the Equipment or instrumentation manufacturer. The building may be a temporary structure on the site or elsewhere, must be painted in a neutral color, and must be no larger than required.

B. All Equipment shall be stored fully lubricated with oil, grease, and other lubricants unless otherwise instructed by the manufacturer.

C. Moving parts shall be rotated or otherwise maintained in accordance with the manufacturer's instructions. Upon installation, the Contractor shall periodically exercise the Equipment to ensure that it does not deteriorate from lack of use.

D. Lubricants shall be changed as frequently as required by the manufacturer between installation and acceptance. New lubricants shall be put into the Equipment at the time of acceptance.

E. The Contractor shall maintain a preventive maintenance record for all Material and Equipment installed but not yet accepted that requires preventive maintenance by the manufacturer. A monthly report of all maintenance performed shall be submitted to the Engineer to certify maintenance has been performed as recommended by the manufacturer.

F. The Contractor shall maintain and repair, as recommended by the manufacturer, any Equipment that has been installed but not yet accepted.

G. The Contractor shall clean exposed Material and Equipment just prior to turnover to the District.

H. Prior to the District's use or acceptance, the Contractor shall have the manufacturer inspect any Equipment valued at more than $2,500 and stored longer than three (3) months and certify that its condition has not been detrimentally affected. Such certification must affirm that the Equipment has not been adversely impacted and the Equipment shall be guaranteed as specified. If such a certification is not provided, the Equipment shall be determined to be defective and shall be replaced at the Contractor's expense. Certification does not relieve the Contractor from meeting all testing requirements.

9.13. District-Furnished Material

A. Material furnished by the District shall be available as designated in the Special Provisions. The Contractor shall load, unload, and haul such Materials to the site of the Work at the Contractor's expense. Once received by the Contractor, the Contractor is responsible for all Material furnished and shall pay any damages and storage charges.

9.14. Final Inspection of Work

A. The Engineer shall make the final inspection of the Work in accordance with Section 11. Contract Closeout. The Contractor is directed to Section 11. Contract Closeout regarding the requirements necessary to obtain final inspection by the Engineer.

THIS PAGE INTENTIONALLY LEFT BLANK

SECTION 10. ENVIRONMENTAL

10.01. Good Neighbor Requirements

A. The District is a public entity that takes seriously its responsibility to be a "Good Neighbor." Accordingly, the District seeks to perform its activities, including construction of its facilities, in a manner that takes into consideration the needs of the neighborhood and that is minimally disruptive.

B. The Contractor hereby acknowledges the critical importance of meeting the Contract requirements as set forth in these Specifications regarding "good neighbor requirements," which include, but are not limited to, public safety, working hours, noise pollution and vibration, air pollution, spillage and dust, traffic control, truck haul routes and parking restrictions, and storm water pollution.

C. The Contractor shall adhere to the above "good neighbor requirements" which relate to the lessening of the impact causes by the Work being performed under this Contract. The Contractor acknowledges that its responsibility to observe the restrictions of this Contract relating to the above requirements is significant, critical, and a material provision of this Contract. Any non-compliance with these requirements may be cause for the District to suspend Work.

10.02. Storm Water Pollution Prevention Plan

A. The Contractor shall prepare and submit to the District an electronic and hard copy Storm Water Pollution Prevention Plan (SWPPP) as required under the National Pollutant Discharge Elimination System (NPDES) General Permit for Storm Water Discharge Associated with Construction and Land Disturbance Activities Order No. 2009-009-SWQ, (as amended).

B. The SWPPP shall incorporate all appropriate storm water Best Management Practices (BMPs) and all risk-based requirements to comply with the NPDES General Permit. The BMP descriptions and the template for the SWPPP shall be in accordance with the current California Stormwater Quality Association (CASQA) Construction BMP Handbook/Portal, which can be purchased at http://www.cabmphandbooks.com.

C. The SWPPP shall be written, amended, certified, and stamped by a Qualified SWPPP Developer (QSD). The implementation of BMPs and all pollution control measures shall be overseen by a Qualified SWPPP Practitioner (QSP). The QSD and QSP shall be provided by the Contractor and shall meet the certification requirements as defined under Section VII of the NPDES General Permit.

D. The District shall make available the following: base maps for the Contractor's use in preparing the vicinity and site maps for the General Permit; a copy of preexisting site and site design information; and a copy of the completed Notice of Intent (NOI), if required.

E. Prior to the commencement of any Work at the site(s), the SWPPP shall be favorably reviewed by the Engineer. Review by the Engineer shall not relieve the Contractor of responsibility for the completeness of the SWPPP nor for the accuracy of assumptions, data, and information used and procedures contained in the Contractor's SWPPP or the adequacy thereof.

F. The SWPPP shall be revised and/or amended by the Contractor's QSD as necessary during the progress of Work to comply with Federal, State, and local regulations and the requirements of these Specifications. All revisions and amendments shall be submitted to the Engineer. Revisions and/or amendments to the SWPPP shall be considered incidental to this item of Work; no additional payment shall be made.

G. The Contractor's personnel supervising the earthwork, sitework, erosion control, and sedimentation control and inspecting erosion controls shall be required to read the SWPPP. A copy of the SWPPP shall be maintained at the construction site by the Contractor and shall be available at all times for review by all Contractors, by the District, or by regulatory agency personnel.

10.02.01. Storm Water BMPs

A. The SWPPP shall include appropriate BMPs, as required, to comply with the specified risk level for the Project.

B. The Contractor shall design, construct, operate, inspect, and maintain the BMPs in accordance with the NPDES General Permit and with the instructions provided in the current CASQA Construction BMP Handbook/Portal.

C. The BMPs shall include, but shall not be limited to, the following:

1. Erosion control.
2. Sediment control.
3. Run-on/runoff control.
4. Wind erosion control.
5. Tracking control.
6. Non-stormwater Management.
7. Waste Management and Materials Pollution Control
8. Project-specific Environmental BMPs as specified in the Contract.

10.02.02. Regulatory Fines

A. The Contractor is responsible for any penalties or fines imposed upon the District by the Regional Water Quality Control Board (RWQCB) or by other regulatory

bodies due to the Contractor's noncompliance with the requirements of the NPDES General Permit. The actual cost of such penalties or fines shall be subtracted from the amount due, or that may become due, the Contractor.

10.03. Water Pollution Discharges and Remedies

A. The Contractor shall remedy immediately any public nuisance or deficiency arising from, or in consequence of, the Contractor's failure to perform the Work specified under Article 10.02. Storm Water Pollution Prevention Plan and Article 19.02. Other Discharge Permits.

B. Upon the Contractor's failure to make appropriate and timely remedies as directed by the Engineer in the best interests of the public, the Engineer may employ private or public workforces and Equipment to perform the Work. The Contractor shall be charged all costs associated with such remedy including actual hours recorded by District staff, District consultants, and District services, multiplied by their actual, fully burdened labor rates. Such action(s) taken by the Engineer shall not preclude the Engineer from taking other appropriate actions and shall not relieve the Contractor of responsibility to comply with these Specifications.

10.04. Water Quality

A. The Contractor shall meet all applicable regulatory requirements to ensure that any discharges to surface waters will not cause violation to the State water quality standards or violation of regulatory permits issued by regulatory agencies.

B. The Contactor shall prevent water quality degradation of water bodies and/or of storm drains. Water quality is measured in terms of pollution substances, turbidity, dissolved oxygen, pH, and temperature.

C. Oily, greasy, or sediment-laden substances or other Materials that originate from the Contractor's operation shall not be allowed to enter, or be placed where they may later enter, any reservoir, river, creek, or stream.

D. The Contractor shall comply with the requirements of the following permits, where applicable, and as specified in the Special Provisions, Article 19.04. Water Pollution Discharges:

1. State Water Resources Control Board (SWRCB) and (NPDES), General Permit for Storm Water Discharges Associated with Construction and Land Disturbance Activities

2. U.S. Army Corps of Engineers CWA Section 404 Permit, and Regional Water Quality Control Board/State Water Resources Control Board CWA Section 401 Water Quality Certification. And/or Waste Discharge Permit.

3. Other individual RWQCB NPDES Permits.

4. Department of Fish and Wildlife 1603 Stream Bed Alteration Agreement.

E. The Contractor shall implement any additional water quality best management practices and mitigation measures described in these Specifications.

10.05. Burial Sites

A. The Contractor shall comply with all applicable laws and regulations pertaining to burial sites, including, but not limited to, Ordinance Code Section B6-18 of the County of Santa Clara and requirements of Public Resources Code Section 5097.98 and Health and Safety Code Section 7050.5. Upon discovering or unearthing any burial site as evidenced by human skeletal remains, the person making the discovery shall immediately stop work and notify the County Coroner. The Contractor shall also notify the Engineer. The Contractor shall immediately secure the site and protect any human remains from further disturbance.

B. Upon determination by the County Coroner that the remains are Native American, the Coroner may contact the California Native American Heritage Commission and the County Coordinator of Indian Affairs. No further excavation or disturbance within 30 feet of the site or of any nearby area reasonably suspected to overlie adjacent remains may be made except as authorized by the California Native American Heritage Commission and/or by the County Coordinator of Indian Affairs, and by the Engineer.

C. The Contractor is advised that if burials are encountered, it may be necessary to suspend Work on the Project to comply with the above requirements. Payment for a Delay of more than one (1) workday for each occurrence shall be made in accordance with Article 3.07. Change in Contract Price(s) and with Article 3.08. Change in Contract Time(s).

10.06. Cultural Resources (Archeological Discovery)

A. The Contractor is advised that if archeological artifacts are encountered, the Contractor will immediately notify the Engineer; it may be necessary to suspend Work on the Project to comply with this Article.

B. Work at the location of the find will halt immediately within 30 feet of the find. If an archaeologist is not present at the time of the discovery, the Engineer will contact an archaeologist for identification and evaluation pursuant to Public Resources Code Section 21083.2, California Code of Regulations Section 15126.4 (California Environmental Quality Act [CEQA] Guidelines) and to the mitigation measures of the Project CEQA document. If the archaeologist determines that the artifact is not significant, the Engineer will authorize the Contractor to resume construction.

C. If the archaeologist determines that the artifact is significant, the archaeologist will determine if the artifact can be avoided and, if so, will detail avoidance procedures. The Contractor will comply with these avoidance procedures.

D. If the artifact cannot be avoided, the archaeologist will develop an action plan that will include provisions to minimize impacts and, if required, a data recovery plan for recovery of artifacts in accordance with Public Resources Code Section 21083.2 and CEQA Guidelines Section 15126.4.

E. The Contractor shall delay Work until the action plan and, if required, the data recovery plan, are favorably reviewed by the Engineer. Once the action plan and the data recovery plan are favorably reviewed, the Contractor shall comply with the requirements of these plans.

10.07. Noise Pollution and Vibration

A. The Contractor shall be responsible for ensuring that noise produced by construction activities does not exceed the applicable local noise ordinance standards and is in compliance with the performance standards set forth in Section 18. Permits and Regulations of the Special Provisions.

B. At a minimum, the Contractor shall exercise precautionary measures listed below. Implementation of these measures shall in no way relieve the Contractor of the responsibility of compliance with the noise criteria.

1. Air compressors and internal combustion engines shall be in good operating condition that meet or exceed original factory specifications and shall be equipped with high grade mufflers, air inlet silencers (where appropriate), and noise suppressers.

2. All mobile or fixed noise-producing machinery and Equipment, including “package” Equipment (e.g., fans, cranes, arc welders, air compressors, electrical operators, etc.), shall be suitably housed, enclosed, shielded, and equipped with noise-control features or muffled to meet the noise limits specified in the Special Provisions.

3. All mobile or fixed noise-producing Equipment used by the Contractor that is regulated for noise output by Federal, State, or local law shall comply with this regulation while in use. This shall include vehicles licensed for use on public highways.

4. Electrically powered Equipment instead of pneumatic- or internal-combustion-powered Equipment shall be used where feasible.

5. The use of noise producing signals, including horns, whistles, alarms, and bells, shall be for safety warning and emergency purposes only.

6. No music system, including personal or vehicle radio, tape, CD players, or the like, shall be audible at the Project right-of-way line.

7. Trucks or other mobile Equipment shall not use engine decompression (“Jake Brakes”) for deceleration on grades where feasible.

C. The Contractor shall take all necessary precautions during its operations to limit peak particle velocities from vibratory compaction or percussion Equipment so that they do not become a public nuisance or result in property damage.

D. Any Equipment causing noncompliance with the noise or vibration criteria shall be removed from the job site as directed by the Engineer.

10.08. Air Pollution

A. The Contractor shall comply with all applicable requirements of the applicable air quality management or control district and California Air Resources Board regulations.

B. Idling of internal combustion engines shall be held to an absolute minimum. All vehicles with internal combustion engines shall be fitted with spark arrestors.

C. The Contractor shall not use any of the listed Materials banned by BAAQMD Regulation 8, Rule 15.

D. Serpentine Materials that have average asbestos content greater than five (5) percent as determined by an aggregate bulk sample analysis pursuant to Air Resources Board Test Method 435 or an alternate method approved by the Air Resources Board or BAAQMD (see also California Code of Regulations, Title 17, Section 93106) shall not be used for surfacing.

E. Except as provided by law, idling of heavy-duty diesel trucks with gross vehicular weight ratings of greater than 10,000 pounds shall be no more than five (5) minutes per California Code of Regulations, Title 13, Section 2485.

F. The Contractor shall implement any additional air quality best management practices and mitigation measures described in these Specifications.

10.09. Spillage and Dust Control

A. Care shall be taken to prevent spillage when hauling is done. Spillage resulting from hauling operations along or across any public-traveled way shall be removed immediately by the Contractor. The Contractor shall pay all expenses for removal of spillage.

B. The Contractor shall control dust nuisances originating from the Contractor's operations either inside or outside the right of way.

C. The Contractor shall provide all necessary precautionary measures to control dust and to prevent spillage on public-traveled ways. At a minimum, the Contractor shall provide the measures listed below and shall also implement additional dust control best management practices and mitigation measures described in these Specifications. Implementation of these measures shall in no way relieve the Contractor of the responsibility to comply with these Specifications.

1. Active maintenance areas, unpaved access roads, and staging areas shall be kept sufficiently moist and watered as necessary or shall be applied with nontoxic soil stabilizers to control dust generation.

2. Trucks hauling sediments and other loose Material shall be covered and shall maintain at least six (6) inches of freeboard.

3. Tailgates of trucks shall be sealed.

4. Trucks shall be brushed down before leaving the site.

5. Paved site access roads shall be swept using vacuum-powered street sweepers when visible soil Material is carried onto the roadway.

6. During high winds, the excavation and grading activity shall be watered or the activity suspended, if necessary, to control dust.

7. Inactive areas shall be sprayed with soil stabilizers or shall be seeded to avoid erosion or dust.

8. Exposed stockpiles shall be watered, enclosed, covered, or sprayed with soil stabilizers.

9. Traffic speeds within the Project right of way shall be limited to 15 mph. For off-site restriction, comply with local agency requirements.

10. Sandbags or other bank protections shall be installed to prevent silt runoff to roadways.

D. The Contractor shall immediately remedy any spillage and dust nuisance or deficiency arising from, or in consequence of, the Contractor's failure to perform the Work specified in these Specifications.

E. Upon the Contractor's failure to make timely remedies determined by the Engineer to be necessary and in the best interests of the public, the Engineer may employ private or public workforces and Equipment to perform the Work. The Contractor shall be charged all costs associated with such remedy including actual hours recorded by District staff, District consultants, and District services, multiplied by their actual, fully burdened labor rates. Such action(s) taken by the Engineer shall not preclude the District from taking other actions as deemed appropriate and shall not relieve the Contractor of responsibility to comply with these Specifications.

10.10. Traffic Control

A. Traffic control shall consist of all work and Materials necessary to maintain safe vehicular, pedestrian, and cyclist traffic during construction and to perform "best management practices" to mitigate high-peak and high-volume construction traffic, prevent idling and queuing, establish site access limitations and mitigation

measures, identify haul routes, and provide overall control of all construction traffic entering, exiting, and operating within the Project site.

B. All traffic control Work shall be performed in accordance with the requirements of the local agency having jurisdiction and California Department of Transportation requirements, if applicable. If required, the Contractor shall prepare a traffic control plan and submit said plan to the Engineer and to the appropriate agency having jurisdiction for favorable reviews in advance of the Work at the site.

C. The Contractor shall cooperate with the local agency having jurisdiction relative to handling traffic around the construction area. The Contractor shall make its own arrangements relative to keeping the Work area clear of parked vehicles to maintain sight visibility and access to adjacent properties. Existing road signs shall not be blocked at any time.

D. Truck traffic and haul routes shall be in compliance with local permits and ordinances. The Contractor shall obtain, at the Contractor’s expense, any required haul route permit from the local authority having jurisdiction for transporting to and from the Project site construction Material and the disposal of surplus Material.

E. The Contractor shall conduct its operations and schedule cleanups that cause the least possible obstruction and inconvenience to traffic, pedestrians, cyclists, and adjacent property owners.

F. Damage done by the Contractor during the course of its Work to adjacent city, town, county, or private property shall be repaired or replaced in kind and as directed by the Engineer.

G. Personal vehicles of the Contractor's employees and the Contractor's Equipment and vehicles shall not, at any time, be parked on the traveled way, shoulders, medians, or lanes that have not been approved for closure. When entering or leaving roadways carrying public traffic, the Contractor's Equipment, whether empty or loaded, shall in all cases yield to public traffic and shall travel in the direction of the traffic. Flaggers and traffic signs may be required to control this activity. No driveways or private roads shall be blocked. Safe access must be maintained for pedestrian traffic throughout the Work areas at all times.

H. Those parts of public streets, right of ways, and sidewalks that are allowed to be occupied by the Contractor shall be immediately vacated by the Contractor and returned to public use when the Contractor’s use thereof is no longer necessary for the construction Work.

I. The Contractor shall comply with and pay for all costs associated with Public Convenience Section 7-1.03; Public Safety Section 7-1.04; and Temporary Traffic Control Section 12 of the State Specifications; and Article 8.01. Public Safety, of these Standard Provisions Specifications. Nothing in these Specifications shall be construed as relieving the Contractor from its

responsibility as provided in Public Safety Section 7–1.04 of the State Specifications.

J. The Contractor shall coordinate with the appropriate local agencies having jurisdiction to receive their approval in the event any temporary lane closures on public streets are needed for the Contractor's operation. Any traffic signing and flaggers as approved by the local agencies for said lane closures shall be in place prior to closing the lane to traffic.

10.11. Regulated Material Management

A. Regulated Material includes, but shall not be limited to, Hazardous Material and Hazardous Waste.

B. The Contractor is responsible for and shall obtain all required permits and pay all fees and taxes for satisfying the requirements of any regulatory agency for the storage, monitoring, usage, transportation, safety, and reporting, or for any other requirements regarding the management of Regulated Material on and off the Project site(s).

C. The Contractor shall not allow Regulated Materials to spill on District property or on easements or on other public or private right of ways. Any spillage of Regulated Materials resulting from the Contractor’s operation shall be removed immediately by the Contractor at the Contractor’s expense.

D. The Contractor shall immediately notify the Engineer of any potentially Hazardous Materials or Hazardous Waste encountered at the worksite and shall take all necessary action to prevent exposure of personnel until all material is identified and proper action can be taken.

10.11.01. Storage of Regulated Material

A. Prior to the storage or use of any Regulated Materials, the Contractor shall submit to the Engineer a Regulated Materials Storage and Use Plan (Plan). The Plan shall include (i) an inventory of all Regulated Materials to be stored or used at the Project site that equals or exceeds any of the following separate material phases: 55 gallons liquid, 200 cubic feet of compressed gas, or 500 lbs. solid; (ii) the maximum quantity of Materials to be stored; (iii) purpose of the Materials; (iv) the MSDS for each Material; (v) a detailed description of how the Materials will be stored (including secondary containment where required by applicable regulatory agencies); (vi) a site plan drawn to scale; (vii) storage area maps drawn to scale; (viii) a detailed description of how the Materials will be monitored; (ix) a detailed description of how wastes from the Materials will be stored and/or disposed; and (x) a detailed description of the procedures to be followed in the event of an uncontrolled release of the Regulated Materials.

B. The Plan shall be submitted to the Engineer and favorably reviewed at least 30 days prior to the storage or use of any Regulated Materials. The Plan shall be updated and submitted to the Engineer by the Contractor upon the addition of

new Regulated Materials not listed previously or upon a 100 percent (or greater) increase in quantity of a Regulated Materials that is listed in the plan.

10.11.02. Regulated Material Discharges or Releases

A. The Contractor is responsible for all discarded or abandoned Material, including Regulated Materials and Hazardous Waste, generated as a result of the Contractor's operations unless specifically noted otherwise in these Specifications. The Contractor shall comply with Article 3.09. Differing Conditions.

B. In the event of a discharge or release of a Regulated Materials from the Contractor's operation, the Contractor is responsible for notifying the proper authorities, providing containment of the material, identifying the contaminants, investigating the extent of all contaminants, testing and removing contaminated materials, disposing of contaminated materials, and verifying the removal of all contaminated materials. These activities shall be performed to the satisfaction of the Engineer at the Contractor's cost. The Contractor shall perform any Work and provide any and all documentation required by the District and by all Federal, State, and local agencies. The Contractor shall provide to the Engineer copies of all correspondence and reports related to these activities. All Work performed to accomplish these activities shall be in accordance with Federal, State, and local regulations.

C. In the event of a discharge or release of Regulated Material, the Contractor shall notify the Engineer immediately. Immediate notifications may be verbal. The Contractor shall submit a detailed written report to the Engineer within 24 hours of the discharge or release. The written report shall include; a description of events leading to the discharge or release, action taken to prevent or control the discharge or release, a description of the discharge or release, the quantity of Material discharged or released, method used to determine the quantity discharged or released, type of Material discharged or released, MSDS for the Material(s) involved, a description of the area affected by the discharge or release, agencies notified and date and time of notification, and status of the cleanup. The report shall also include the proposed investigation, cleanup, and verification sampling activities.

D. All expenses incurred by the Contractor as a result of or to remedy the discharge or release of Regulated Materials shall be borne solely by the Contractor; no additional compensation shall be made. The Contractor shall be responsible for signing the Nonhazardous Waste Manifests and the Hazardous Waste Manifests and for paying the State Superfund fees, the generator's fees, and other costs of disposal of these wastes unless specifically stated otherwise in these Specifications. The Contractor shall be identified as the owner and generator of the wastes associated with unauthorized releases or discharges.

10.11.03. Hazardous Waste

A. The Contractor shall manage the Hazardous Waste generated from this operation in accordance with the Specifications below:

1. Labeling: The Contractor shall completely fill out and affix a “Hazardous Waste” label to each Hazardous Waste container for the Contractor’s operations. Each Hazardous Waste label shall contain, at a minimum, (i) the words “HAZARDOUS WASTE”; (ii) information on the generator (i.e., name, address, phone number); (iii) EPA identification number for the waste stream; (iv) EPA and/or California Waste Code; (v) waste accumulation starting date; (vi) identification and content of the waste; (vii) the physical state of the waste (i.e., solid or liquid); (viii) and the hazardous property (i.e., flammable, toxic, corrosive, reactive, etc.). If the primary container is placed inside a secondary container, then the Contractor shall also prepare and affix another Hazardous Waste label on the secondary container.

2. Secondary containment: The Contractor shall provide appropriate secondary containment for all storage areas for Hazardous Materials and Hazardous Waste. In the case of an installation with one (1) primary container, the secondary containment shall contain at least 110 percent of the volume of the primary container. In the case of an installation with multiple primary containers, the secondary containment shall contain 150 percent of the volume of the largest container or ten (10) percent of the aggregate internal volume of all primary containers in the storage facility, whichever amount is greater. If the storage facility or storage system is open to rainfall, then the secondary containment must be able to additionally accommodate the volume of a 24 hour rainfall as determined by a 25 year storm history.

3. Accumulation time limit: The Contractor shall properly haul and dispose of all Hazardous Waste within 90 Days from the accumulation starting date identified on each Hazardous Waste label or on the completion date of the Contract, whichever event comes first. The waste accumulation starting date for each waste stream begins when the first drop of the waste is placed in the container.

4. Hauling and disposal of waste: The Contractor shall be responsible for using appropriate Hazardous Waste haulers and disposing of all Hazardous Waste in accordance with Federal, State, and local regulations.

B. Waste Manifests: Prior to issuance of the Project Completion letter, the Contractor shall submit copies of all Hazardous Waste Manifests signed by disposal facilities and certificates of disposal to prove that the Contractor has legally disposed of such materials. The Contractor shall submit four (4) copies of each manifest.

10.12. Non-regulated Materials

A. Non-regulated Material is any substance that is not required by any Federal, State, or local regulations to have special management, storage, disposal, or handling practices.

B. Non-regulated Material may be disposed at State-permitted, non-hazardous waste landfills.

C. For non-regulated material to be reused or disposed of on-site or at a site other than a State-permitted landfill, the Contractor must obtain all required permits, agency approvals, and property owner agreements and pay all fees and taxes for all services and Materials required in conjunction with the management, transportation, disposal, and reuse of non-regulated materials.

10.12.01. Disposal at Other than State-Permitted Landfills

A. The Contractor shall enter into an agreement with the property owner prior to disposal of materials and submit a copy thereof to the Engineer conveying a written consent from the property owner receiving the materials providing:

1. a written authorization from the property owner to accept materials at duly noted quantities, types of materials (e.g., soils, debris, etc.), and the disposal property location address; and

2. a written release from the property owner fully absolving the Santa Clara Valley Water District from any and all responsibility and legal liability toward any damage to life and environment in connection with the disposal of the materials on the property.

B. Prior to the disposal of materials, the Contractor shall provide:

1. copies of all applicable regulatory agency permits, approvals, licenses, and environmental clearances;

2. site specific health and ecological risk assessment and/or compliance with applicable regulatory agency regulations or guidelines, including, but not limited to, the Environmental Screening Levels per the latest guidelines from the San Francisco Bay RWQCB;

3. copies of documentation of communication made by the Contractor with appropriate regulatory agencies on evaluation of regulatory requirements and regulatory agency approvals for disposal of materials; and

4. copies of laboratory testing reports for the materials to be disposed.

C. Within 15 Days after the disposal of materials at the property location, the Contractor shall submit an acknowledgement duly signed by the property owner certifying the date of receipt of the materials, including quantity and types of

materials received (e.g., soils, debris, etc.), to prove that the Contractor has disposed of the materials at the location designated in the agreement.

D. Waste Manifests: Prior to issuance of the Project Completion letter, the Contractor must submit copies of all Non-hazardous Waste Manifests signed by disposal facilities and certificates of disposal to prove that the Contractor has legally disposed of such materials. The Contractor shall submit four (4) copies of each manifest.

10.13. Imported Earthfill Material

A. The Contractor shall not import earthfill material that is contaminated with Regulated Materials.

B. If imported earthfill Material is, or is found to be, contaminated by Regulated Materials, the Contractor shall immediately remove the contaminated material and dispose of it in accordance with all applicable laws, ordinances, and regulations; conduct necessary sampling and monitoring to verify that all contaminated material has been removed; and verify to the satisfaction of the Engineer and/or to the appropriate regulatory agencies that any surrounding areas, materials, soils, or waters have not been impacted by the contaminated materials. The subsequent disposal of the contaminated material shall be the responsibility of the Contractor. No compensation shall be made to the Contractor by the District for removal, disposal, replacement, or chemical analysis, or for any other costs associated with the removal, disposal, and replacement of the contaminated material.

C. For each imported earthfill material to be used on the Project, the Contractor shall submit to the Engineer completed Imported Materials Certification Form; copies of this form are available from the Engineer. If the imported earthfill materials are to be obtained from more than one (1) source, the Contractor shall submit a separate form for each source of earthfill material. This form shall be submitted at least 30 Days prior to the delivery of the earthfill material to the construction site and shall receive favorable review prior to delivery.

D. The Engineer may obtain soil samples from the site and test them to monitor the Contractor's compliance with these Provisions.

10.14. Migratory Birds

A. The Contractor shall comply with all applicable Federal and State laws, rules, and regulations related to the protection of migratory birds, including, but not necessarily limited to, the Federal Migratory Bird Treaty Act (16 USC 703-712 50 CFR Part 21 and 50 CFR Part 10) and the California Department of Fish and Game Code Sections 2000, 3503, 3503.5, 3513, and 3800.

B. The Contractor shall carry out all activities in a manner consistent with the U.S. Fish and Wildlife Service's Migratory Bird Program. The Contractor shall not pursue, hunt, take, capture, kill, attempt to take, or possess any migratory bird

listed in 50 CFR 10.13, or any part, nest, or egg of any such bird. Active nests are those containing either an egg (or eggs) or young and/or nests used by birds of prey, regardless of the presence of eggs or of young. To determine the occupancy of nests, the Contractor shall rely upon the professional expertise of a Qualified Biologist. See Section 19. Environmental.

C. The Contractor shall coordinate several measures, including (i) awareness and training of the Contractor's personnel on which bird species are protected, their nesting seasons, and seasonal variability; (ii) surveys to determine the presence of nesting birds in the Project area; (iii) establishment, maintenance, and removal of protective buffer zones around nests; (iv) installation and maintenance of exclusion devices; (v) nest prevention activities; and (vi) monitoring to ensure the adequacy of the compliance measures.

10.14.01. Scope of Work

A. The Contractor shall be aware of migratory bird nesting seasons (generally from January 15 to August 31) and variability; provide training to all Contractor personnel on the Project; monitor the Project site; perform preventative and deterrence measures to prevent birds from nesting; preserve and protect pre-established protective buffer zones; perform surveys to determine the potential for protected species to be in the Project area; establish new protective buffer zones around un-prevented nests, as required; install and/or maintain exclusion devices, such as netting and/or wire mesh screens; monitor to assure the adequacy of the compliance measures; and perform any other Work as specified herein to comply with all applicable statutes.

B. The Qualified Biologist shall monitor regulatory compliance, train Contractor personnel, and coordinate with the Engineer in conformance with (i) this Article; (ii) the Project specific Mitigation Monitoring and Reporting Program (MMRP) requirements relating to this Article; and (iii) all applicable permit conditions. The Qualified Biologist shall:

1. Provide bird nesting awareness training for all personnel working on the Project, including all sub-contractors.

2. Monitor the Project site for nest starts and occurrences of active bird nests.

3. Document the location, status, and species of bird for each active nest.

4. Monitor the Work to ensure that protected birds are not disturbed in a manner that could result in noncompliance.

5. Establish protective buffer zones around active nests as specified herein.

6. Ensure protective buffer zones are maintained and nests are not disturbed. Advise when protective buffer zones are no longer needed and can be removed.

7. Monitor the maintenance and effectiveness of bird exclusion devices.

8. Provide recommendations concerning vegetation management, installation of additional exclusion devices, and maintenance of such devices to prevent bird nesting. Advise when exclusion devices are no longer needed and can be removed.

C. Within 14 Days of the First Chargeable Day, the District will release the site to the Contractor. Prior to the release, the Engineer and the Contractor shall assess the site to determine the presence of nesting birds and any existing protective buffer zones and exclusion devices within or near the construction areas. In no case shall the District maintain responsibility for the site for more than 14 Days after the First Chargeable Day. Upon release of the site, the Contractor assumes complete responsibility for the site, including Work site monitoring, existing protective buffer zones, and exclusion devices and shall perform all required Work as specified herein.

10.14.02. Migratory Bird Surveys

A. The Qualified Biologist shall perform migratory bird surveys prior to any Project related activity that could pose the potential to affect migratory birds.

B. The Contractor shall include activities for Qualified Biologist surveys on Project Schedules with assurance that the appropriate migratory bird surveys have been coordinated with the Qualified Biologist and will be performed in advance of activities.

10.14.03. Migratory Bird Monitoring

A. The Contractor is responsible for ongoing monitoring to ensure that migratory birds, their active nests, eggs, and young are not harmed in any way.

B. The Contractor and Qualified Biologist shall inspect all areas that may be affected by Project activities, including all vegetation, grounds, structures, and bridge(s), with sufficient frequency as needed to identify any new and partially built bird nests.

C. At the direction of the Engineer and the Qualified Biologist, the Contractor shall be responsible for the removal of any inactive or partially built bird nests with the exception of raptor nests. No birds, nests with eggs, or nests with hatchlings shall be disturbed, nor shall raptor nests be removed unless specified in the Special Provisions Article 19. Environmental.

10.14.04. Protective Buffer Zones

A. Existing protective buffer zones, if any, are shown on the Drawings or shall be communicated to the Contractor prior to the District releasing the site. In addition to District-established buffer zones, new protective buffer zones shall be required if a nest is established or discovered during the Contractor's activities. In the

event that an active nest is discovered in the Project area, or in adjacent areas considered to have the potential to be disturbed by the Contractor's activities, the Contractor shall notify the Engineer and establish a protective buffer zone around the nest. The exact location of the boundaries of protective buffer zones shall be established by the Qualified Biologist and approved by the Engineer. The Contractor shall install temporary fencing at the boundary of each new protective buffer zone except as otherwise directed by the Engineer. The fencing shall be Type ESA Temporary Fence per Caltrans Article 14-1.03. The Contractor shall attach signs labeled "Nesting Bird – Access Prohibited" at least every 50 feet along the fencing. The Contractor shall exclude Project activities to preserve and protect all protective buffer zones, including existing ones, at all times.

B. In the event that an active nest is discovered by the Qualified Biologist, the Biologist shall immediately notify both the Contractor and the Engineer of the active nest and of the applicable protective buffer zone.

C. The Qualified Biologist shall inspect all active nesting-bird protective buffer zones(s) on at least a weekly basis until such time as the nest is no longer active as confirmed by the Qualified Biologist. Once a nest is no longer active, the protective buffer zone shall be removed.

D. The Contractor shall be responsible for any added costs or schedule Delays as a result of the establishment of new nests or of new protective buffer zones due to the Contractor's failure to perform bird exclusion responsibilities.

E. The Contractor shall monitor protective buffer zone operations during the Project. Requirements for the protection of active nests may vary depending on the location and the species involved. The following are general guidelines to be followed by the Contractor when an active nest is encountered:

1. Stop any activities that may harm the nest.

2. Contact the Engineer immediately.

3. Only the Qualified Biologist should approach the nest and only if necessary.

4. The Contractor shall inform personnel of the presence of an active nest and take steps, described above, to avoid disturbing it.

5. Until inspected by the Engineer or Qualified Biologist, a 20-foot-radius protective buffer zone shall be established around the nest of any non-raptor, ground nesting bird, and a 50-foot-radius protective buffer zone around nests established in shrubs, trees, on structures, on Equipment, etc., except for raptor nests. Furthermore, the protective buffer zone shall be 250 feet for nesting raptors (including hawks), owls and burrowing owls, falcons, eagles, herons, and egrets. The Qualified Biologist may recommend, for approval by the Engineer, modification of these zones.

6. Refer to Section 19. Environmental for additional specific buffer zone requirements.

10.14.05. Exclusion Devices

A. The Contractor shall install nesting exclusion devices to prevent potential establishment or occurrence of a nest in the Project area during Project activities. The Contractor shall maintain all nesting exclusions devices, including existing ones, throughout the nesting season or until completion of Work in an area makes the devices unnecessary. The Contractor shall be responsible for the maintenance, repair, or replacement of exclusion devices until all of the Work is complete. The Contractor shall remove and dispose of all exclusion devices, including those installed by the District, when Work in the area is complete.

B. Bird exclusion devices shall be installed during the non-nesting season (generally September 1 through January 14). The Contractor shall obtain favorable review from the Engineer when installing bird exclusion devices during the nesting season (generally January 15 through August 31). At a minimum, all exclusion devices shall be inspected daily by the Contractor and weekly by the Qualified Biologist to ensure integrity of the devices and to prohibit birds from nesting without causing them harm.

10.14.06. Nest Prevention

A. The Contractor is hereby notified that all areas to be cleared of vegetation may be suitable nesting habitat for migratory birds. The Contractor shall perform all necessary clearing prior to the nesting season if at all possible. If clearing must occur during the nesting season, the Contractor shall obtain prior approval from the Engineer. If vegetation must be cut and maintained to prevent birds from nesting, it must be cut to less than six (6) inches in height and removed.

B. The Contractor shall inspect and monitor bare areas and gravel areas prior to commencement of the nesting season and as frequently as necessary thereafter and provide deterrence measures if necessary to prevent ground-nesting birds, such as killdeer, from establishing a nest.

C. Removal of vegetation (trees, shrubs, grasses, and herbaceous plants) shall be limited to areas shown on the Drawings designated for vegetation removal unless approval is obtained from the Engineer to remove vegetation from additional areas. No vegetation shall be trimmed back unnecessarily, including trees and/or shrubs growing near the right of way that overhang onto the worksite. Such overhanging foliage shall be protected and tied back if necessary. Landscaped areas and irrigation systems outside of the construction areas shall be preserved and protected from damage by the Contractor’s activities.

D. Pre-established Vegetation Management Areas: Some areas of vegetation removal, clearing, and eradication may be established and cleared by the District prior to the First Chargeable Day. In these areas, the Contractor shall be responsible for the continued clearing and eradication of all re-sprouts.

10.14.07. Submittals

A. Submit a résumé of qualifications of the Qualified Biologist for the Engineer's favorable review. The Qualified Biologist's qualifications must meet the minimum requirements as specified for the Qualified Biologist listed in Section 19. Environmental. The résumé shall be submitted and must be favorably reviewed by the Engineer prior to any Work.

B. Submit migratory bird survey reports to the Engineer within two (2) Days upon completion of the survey and at least two (2) Days prior to commencement of Project related activities.

C. Submit the Qualified Biologists' training materials for favorable review by the Engineer, prior to presenting bird nesting awareness training to personnel.

D. Submit to the Engineer no later than 15th Day of each month a monthly report prepared and signed by the Qualified Biologist that documents the activities of the Contractor, including, at a minimum, the status of awareness trainings provided, the installation, maintenance, or removal of any bird exclusion devices or protective buffer zones and their locations and monitoring results, and report the current status of previously documented bird nests.

E. When requested by the Engineer, maintain and submit a log of weekly documentation (including photo-documentation) of the time, date, condition of the nests, and any nest-prevention actions taken during inspections.

F. Submit to the Engineer product data for nesting exclusion devices, fencing for protective buffer zones, and any shop Drawings as deemed appropriate by the Engineer.

G. If the Contractor wishes to modify the dimensions of any protective buffer zone or modify any bird exclusion device, a written proposal of such modification must be submitted and favorably reviewed by the Engineer. The submittal must contain the Qualified Biologist's written justification for the proposed modification and shall include a description of the anticipated effects on the active nest and on nesting birds.

10.15. Other Wildlife and Fish Species

A. The Contractor shall comply with all regulatory and permit requirements pertaining to other wildlife and fish species as identified in Section 19. Environmental.

10.16. Sensitive Plants and Vegetation

A. The Contractor shall comply with all regulatory and permit requirements pertaining to sensitive or listed plants and vegetation communities as identified in Section 19. Environmental.

10.17. Proper Pruning Techniques for Woody Vegetation Removal

A. An International Society of Arboriculture (ISA) Certified Arborist or Tree Worker is to be present at all times during pruning. Contractor shall comply with the following:

1. All pruning shall be in accordance with the most current editions of the Best Management Practices for Pruning (International Society of Arboriculture) and the American National Standard for Tree Care Operations (ANSI booklet Z133.1) and Pruning (ANSI booklet A300).

2. Pruning for clearance: Selectively remove only branches required for passage and movement of construction equipment.

3. Remove stubbed branches at the point of origin, outside the bark branch ridge.

4. No more than 25% of live foliage shall be removed from any tree at any one time (or in a given year).

5. Branch removal or reduction cuts (thinning cuts) are to be employed rather than heading cuts. Trees shall not be topped or headed back.

6. All cuts shall be distal to the branch bark ridge or, if present, the branch collar. The cuts shall be close to but shall not injure the branch collar. All final cuts shall be in one plane, with no torn bark.

7. Pruning cuts larger than 4 inches in diameter, except for dead or stubbed branches, shall be avoided.

8. Pruning operations shall be conducted in a manner that does not damage surrounding understory plants, if present.

THIS PAGE INTENTIONALLY LEFT BLANK

SECTION 11. CONTRACT CLOSEOUT

11.01. Project Completion and Acceptance

11.01.01. Use Before Acceptance

A. The District has the right to utilize or to place into service any item of Equipment or other usable portion of the Work before Acceptance of the entire Project. The District's exercise of said right shall hereinafter be referred to as Use Before Acceptance.

B. Where Use Before Acceptance is identified in the Contract Documents, it shall be considered part of the Work; no additional compensation or payment shall be made.

C. Should the District desire Use Before Acceptance that has not been identified in the Contract Documents, the Engineer shall notify the Contractor in writing, identifying the specific portion or portions of the Work proposed for Use Before Acceptance.

D. The Contractor shall provide written notice within ten (10) Days after a request for Use Before Acceptance by the District stating whether the proposed portions of Work are suitable for Use Before Acceptance and if there are any associated costs, constraints, or other impacts.

E. Until Use Before Acceptance, the Contractor is responsible for all care and maintenance of all items or portions of the Work.

F. Unless the Engineer requires the Contractor to execute a Use Before Acceptance Guaranty as provided in Article 11.02.03. Use Before Acceptance Guarantee, upon the District's issuance of written notice of Use Before Acceptance, the District accepts responsibility for the protection and maintenance of all such items or portions of the Work described in the written notice, with the exception of any injury or damage resulting from the Contractor's actions or from negligence.

G. If, by reason of the District's unidentified Use Before Acceptance, the premium for the Contractor's bodily injury and property damage insurance is increased, the District shall reimburse the Contractor for the additional amount necessarily incurred, allocable to the area and the period of the District's use up to the date of Acceptance of the Work.

H. The District's Use Before Acceptance does not constitute Acceptance of the Work, or of any portion of the Work, by the District, nor does it relieve the Contractor of responsibility for correcting defective and/or deficient Work or Material found at any time before Acceptance of the Work or during the guarantee period after the District's Acceptance. Notwithstanding any Use Before Acceptance, the Contractor retains full responsibility for fulfilling all of the requirements of the Contract Documents.

11.01.02. Contractor's Responsibility to Manage Incomplete and Deficient Work

A. The Contractor is responsible for identifying and managing incomplete and deficient Work. Incomplete and deficient Work includes, but is not limited to, noncompliance items, rework items, and nonconforming tests; deficiencies relating to inspections by the building official; administrative requirements; and items of Work not complete per the Contract.

B. The preliminary final and final inspections shall not be conducted until:

1. the entire Work of the Milestone/Project is complete;

2. cleaning has occurred pursuant to Standard Provisions Article 11.04. Final Cleaning and to Special Provisions Article 22.06. Final Cleaning; and

3. deficient Work identified in all outstanding noncompliance notices and/or deficiency lists has been corrected.

C. For each Milestone Completion, the Contractor must include activities for conducting the preliminary final inspection, completion of deficiency list, and final inspection in the Contractor's Detailed Progress Schedules.

D. The District may withhold the estimated cost of the incomplete and deficient Work and consequences thereof until it is completed in accordance with the requirements of the Contract Documents.

11.01.03. Milestone Completion Preliminary Final Inspection

A. When the Contractor believes the Work of a Milestone or Project is complete, including final cleaning of the Work area associated with the Milestone, the Contractor shall submit to the Engineer a written certification that the Work of the Milestone is complete and shall request a preliminary final inspection of the work of the Milestone by the District.

B. Prior to requesting the inspection, the Contractor shall furnish the following Milestone Completion Certification to District:

"To the best of my knowledge, all Work of Milestone (#) has been completed, inspected, and tested and is in full compliance with the requirements of the Contract."

Certified by Contractor: _____ *Date:* _____
(Signature)

C. Within seven (7) Days of receipt of the Contractor's certification that all Work of a Milestone/Project is complete, the Engineer shall conduct a preliminary final inspection with the Contractor.

D. If the Engineer determines that, based on the results of the preliminary final inspection, the incomplete/deficient Work identified is greater in substance and/or volume than can be appropriately declared on a Deficiency List, then the Work is not complete enough to complete the preliminary final inspection. The Contractor shall be so notified in writing. The Contractor must complete the Work and reinitiate procedures for another preliminary final inspection. Any costs to the District for more than two (2) preliminary inspections may be charged to the Contractor.

E. If the results of the preliminary final inspection are satisfactory to the Engineer, a Deficiency List shall be prepared and issued to the Contractor. Neither the District's preparation of the Deficiency List, nor any omission from the Deficiency List of items of incomplete and/or deficient Work relieves the Contractor from completing all the Work required by the Contract.

11.01.04. Milestone Completion Final Inspection

A. Prior to requesting the milestone completion final inspection, the Contractor shall furnish the following milestone completion certification to the District:

"The work of Milestone (#) has been completed, inspected, and tested and is in full compliance with the requirements of the Contract. All Deficiency List items identified during the Preliminary Final Inspection have been completed."

Certified by Contractor: _____ *Date:* _____
(Signature)

B. Upon delivery of this certification to the Engineer and if the Engineer agrees with the Contractor's certification, a final inspection shall occur within ten (10) Days of the Contractor's delivery of the milestone completion certification.

C. If the Engineer determines the Work is deficient, the Contractor shall again be furnished with a Deficiency List identifying the observed deficiencies in the Work. After all deficiencies have been corrected, the Contractor must initiate procedures for another final inspection. If more than two (2) final inspections are required, any costs to the District for additional final inspections may be charged to the Contractor.

D. After Acceptance of the Contractor's milestone completion certification following the final inspection, the Engineer shall issue a milestone completion letter to the Contractor. This letter will establish the date of the completion of the milestone. The assessment of Liquidated Damages, if applicable, shall cease accruing as of the date of the milestone completion.

E. The Contractor's Detailed Progress Schedules must include activities for final inspection of milestones.

11.01.05. Project Completion

A. The Contractor shall certify that the entire Work of the Project is complete. Completion of the Project includes submission to and acceptance by the District of all milestone completion submittals. Article 22.05. Submission Closeout Items, describes in greater detail the submittal requirements for Contract Closeout.

B. Prior to the Engineer issuing the Project completion letter, the Contractor shall furnish the following Project completion certification to the District. This certification is in addition to any intermediate Milestone completion certifications:

"*The entire Work of the Project has been completed, inspected, and tested and is in full compliance with the requirements of the Contract Documents. All Deficiency List items have been completed. All Deficiency List items have been completed. All items on the rework list have been completed. All Closeout Documents required by Article 22.05. Submission of Closeout Items, have been submitted to and accepted by the Engineer."*

Certified by Contractor: _____ *Date:* _____
(Signature)

C. The Contractor's certification shall also include the completion of all Deficiency List Work and the correction of all rework.

D. After acceptance of the Contractor's final certification, the Engineer shall issue a Project completion letter to the Contractor. This letter shall establish the date of the completion of Project. The assessment of Liquidated Damages, if any, shall cease accruing as of the date of Project completion.

11.01.06. Acceptance of Work

A. After issuing the Project Completion letter, the Engineer shall recommend that the District Board of Directors formally accept the Work.

B. Acceptance of Work shall be made by the District Board of Directors and only after the Engineer has recommended acceptance.

C. After the Board of Director's formal Acceptance of Work, the Clerk of the Board shall record a Notice of Completion of Contract and Acceptance of Work.

D. The District's Acceptance of Work establishes conformity with the Contract except for Delays in completion, latent defects, fraud, or such gross errors as amount to fraud, willful misconduct, or gross negligence, and are subject to any guarantee and warranty, express or implied. Determinations by the Engineer that the Work is complete or Acceptance of Work by the Board of Directors does not bar any action by the District against the Contractor pursuant to Article 11.02. Guarantee and Guaranty Bond.

11.02. Guarantee and Guaranty Bond

11.02.01. Guarantee

A. The guarantee period for any item of Equipment or usable portion of the Work that the District utilizes or places into service shall commence on the date of the Notice of Completion of Contract and Acceptance of Work.

B. The Contractor hereby agrees to make, at its own expense, all repairs or replacements necessitated by defects in Material or workmanship supplied or constructed under the terms of this Contract and to pay for any damage to other Work resulting from such defects that becomes evident within a minimum of three (3) years after the date of Notice of Completion of Contract and Acceptance of Work or within such period of time as may be prescribed by law. The Contractor further assumes responsibility for a similar guarantee for all Work and Materials provided by Subcontractors or by manufacturers of packaged Equipment components. The Contractor also agrees to indemnify, defend, and hold the District harmless from liability of any kind arising from damage due to said defects.

C. The Contractor-furnished Guarantee and Guaranty Bond specified herein shall be in addition to any Equipment, workmanship or Material warranties specified elsewhere in the Contract or as provided by the manufacturer. The Contractor shall provide copies of all warranties required of the Specifications in addition to the Guarantee and Guaranty Bond.

D. The Contractor shall execute and submit to the Engineer a completed guaranty form for the Work in the format provided below.

E. The Contractor shall, upon receipt of notice in writing from the District, promptly make all repairs arising out of defective Materials, workmanship, or Equipment. If the Contractor has failed to make the repairs with due diligence within ten (10) Days after giving this notice to the Contractor, the District is hereby authorized to make such repairs. In case of emergency, where, in the opinion of the District, Delay could cause serious loss or damage, repairs may be made without notice sent to the Contractor. The Contractor and its Surety shall be liable for any expense in connection with repairs performed by the District or by its agents.

F. Prior to the expiration of the guaranty period, the District reserves the right to hold a meeting and require the attendance of the Contractor and relevant Subcontractors and Suppliers at no cost to the District. The purpose of the meeting is to review guaranties, bonds, and maintenance requirements and to determine the required repair or replacement of defective items.

G. For the purpose of this Article, Acceptance of the Work or a portion of the Work by the District shall not extinguish any covenant or Agreement on the part of the Contractor to be performed or fulfilled under this Contract that has not, in fact, been performed or fulfilled at the time of such acceptance. All covenants and

agreements shall continue to be binding on the Contractor until they have been fulfilled.

11.02.02. Guaranty Bond

A. The Contractor shall furnish a written guaranty bond in the format provided below prior to issuance of the Project Completion letter. The guaranty bond shall be executed by both the Contractor and the surety (who must be an admitted surety in accordance with California Code of Civil Procedure Section 995.670). This guaranty bond shall be for a period of three (3) years after the date of Notice of Completion of Contract and Acceptance of Work and shall cover all Work.

B. The amount of the guaranty bond shall be no less than 15 percent of the total Contract Price(s).

SANTA CLARA VALLEY WATER DISTRICT

GUARANTY FORM

Guarantee for

(Project Name and Project Number)

City, State

We hereby guarantee the Project commonly known as _____ has been completed in accordance with the requirements of the Contract Documents and further agree that the Work to be free of defects in workmanship, Materials, and Equipment and to remain free of such defects for a period of three (3) years from the date of Acceptance of Work by the District's Board of Directors.

We agree that if any defects in Materials, workmanship, or Equipment become evident, we shall, within ten (10) Days after written notice of such defects, commence to repair or replace the same together with any other Work that may be damaged or displaced in so doing.

In the event of our failure to comply with the above-mentioned conditions within a reasonable time after being notified, or should the emergencies of the case require repairs or replacements to be made before we can be notified or respond to notification, we do hereby authorize the Santa Clara Valley Water District to proceed to have the defect repaired and made good at our expense; we shall pay the cost therefor upon demand.

The Guaranty provided herein shall not be in lieu of, but shall be in addition to, any warranties or other obligations otherwise imposed by the Contract Documents and by law.

Contractor: _____

Signature: _____

Title: _____

Date: _____

SANTA CLARA VALLEY WATER DISTRICT

GUARANTY BOND

BE IT KNOWN BY THESE PRESENTS: That

WHEREAS, the Santa Clara Valley Water District, State of California, has awarded to _____ (hereinafter designated as "Principal") a Contract for _____; and

WHEREAS, said Principal is required under the terms of said Contract to furnish a Guaranty Bond for the faithful performance of said Contract's Guaranty.

NOW, THEREFORE, we, the Principal and

_____ as Surety, are held and firmly bound unto the Santa Clara Valley Water District (hereinafter called "District") in the sum of

_____

Dollars ($_____) lawful money of the United States, for the payment of which sum well and truly to be made, we bind ourselves, our heirs, executors, administrators and successors, jointly and severally, firmly by these presents.

THE CONDITION OF THIS OBLIGATION IS SUCH that if the above Principal, or heirs, executors, administrators, successors, or assigns shall in all things stand to and abide by, and well and truly keep and perform the covenants, conditions and agreements in the said Contract and any alteration thereof made as therein provided, to be kept and performed at the time and in the manner therein specified, and in all respects according to their true intent and meaning, and shall indemnify and save harmless the District, its officers, agents, and employees, as therein stipulated, then this obligation shall become null and void; otherwise it shall be and remain in full force and effect.

And the said Surety, for value received hereby stipulates and agrees that no change, extension of time, alteration, or addition to the terms of the Contract or to the Work to be performed thereunder or to the Specifications accompanying the same shall in any way affect its obligation on this bond, and does hereby waive notice of any such change, extension of time, alteration, or addition to the terms of the Contract or to the Work or to the Specifications.

In the event suit is brought upon this bond by the District and judgment is recovered, Surety shall pay all costs incurred by the District in such suit, including a reasonable attorney's fee to be fixed by the Court.

IN WITNESS WHEREOF two identical counterparts of this instrument, each of which shall for all purposes be deemed an original thereof, have been duly executed by the Principal and Surety above named, on the _____ Day of _____, 2_____.

_____ (Seal) _____ (Seal)
_____ (Seal) _____ (Seal)
_____ (Seal) _____ (Seal)

Principal *Surety*

Address: _____
_____

NOTE: Signature of those executing for Surety must be properly acknowledged.

11.02.03. Use Before Acceptance Guarantee

A. For Equipment or components of Equipment or other usable portions of the Work utilized or placed into service for the District's benefit during the progress of the Work and prior to Acceptance of Work, the Contractor shall submit the guarantee/warranty certificate below on the Contractor's letterhead.

(Contractor's Letterhead)

USE BEFORE ACCEPTANCE GUARANTY

FOR

EQUIPMENT OR OTHER USABLE PORTION OF THE WORK INSTALLED BY CONTRACTOR

AND

USED BY DISTRICT BEFORE ACCEPTANCE OF WORK

We (Name of Contractor), agree to maintain and repair as recommended by the manufacturer the following described Equipment (system) or other usable portion of the Work that has been utilized or placed into service by the personnel of the District prior to Acceptance of Work. The Guaranty provided herein shall not be in lieu of, but shall be in addition to, any warranties, performance bond, payment bond, or other obligations otherwise imposed by the Contract Documents and by law.

Owner: Santa Clara Valley Water District

Description of Equipment or other portion of the Work: _____(Include manufacturer name, model number, serial number, and such other information as needed to positively identify the Equipment/system or portion of Work.)

Location of Equipment: _____

Installed under: (Contract Number and Contract Title)

Date Installed:_____

Date of first utilization or placement into service by the District:_____

This guaranty/warranty is effective upon date shown herein under, and shall remain effective until the District's Acceptance of Work.

Name of Contractor:_____

By: _____

Address: _____

Phone: _____

License No. _____

Date: _____

11.03. Submission of Closeout Items

11.03.01. As-Built Drawings

A. At completion of construction and prior to issuance of the Project Completion letter by the District, the Contractor shall deliver the following documents to the Engineer in the following form:

1. One original set of As-Built Drawings.

2. Field Test Records (two [2] copies): Unless required to be submitted elsewhere in the Specifications, field test records shall be submitted as a closeout item bound into three ring vinyl binders with clear plastic spine label pockets with all pages numbered. A complete, neat, word processed table of contents for each binder with page numbers for each entry must be provided.

3. Field survey record documentation.

B. Accompany the closeout document submittal with a transmittal letter in duplicate containing the following:

1. Date.

2. Santa Clara Valley Water District Project name and Project number.

3. Contractor's name and address.

4. Title and number of each document.

5. Certification that each document as submitted is complete and accurate.

6. Signature of Contractor.

11.03.02. Closeout Documents

A. At completion of construction and prior to the issuance of the Project Completion Letter by the District, the Contractor shall deliver the following closeout documents to the Engineer:

1. Evidence of compliance with and approval of Contractor obtained permits and associated inspections of authorities issuing the permits.

2. Copies of all special guarantees, warranties, and bonds.

3. Evidence of release of all liens and stop-payment notices.

4. Release of Claims in accordance with Article 6.03. Final Payment.

5. Records indicating the District's receipt and acceptance of all tools, spare parts, and extra Material as specified in these Specifications.

6. Records indicating the District's receipt and acceptance of all O&M manuals as specified in these Specifications.

7. Any and all administrative paperwork required for closeout.

11.03.03. Keys

A. The Contractor shall turn over all keys to new and existing facilities to the Engineer. This includes keys that were loaned (if any) to Contractor staff by the District for use during the construction period. The Contractor shall provide a written description or schedule describing which keys correspond to which doors, gates, or other feature.

11.04. Final Cleaning

11.04.01. Scope and Schedule for Final Cleaning

A. Final cleaning is separate Work from cleaning done throughout the Project to maintain the Project site in a safe and presentable condition. Final cleaning shall be a comprehensive cleanup of all new and existing facilities affected by the Work prior to and finished within 30 Days of the District's approval for continuous use and occupancy. Final cleaning may be performed separately by structure or area at different time periods only if approved by the Engineer.

B. Completion of this Work shall be planned and scheduled to accommodate the operational requirements of this District facility.

11.04.02. Final Cleanup

A. Before final inspection, the Contractor shall clean the premises and, unless otherwise specified, remove from the worksite and areas adjacent to the worksite, all building Material, rubbish, debris, unused Material, concrete forms, falsework, temporary structures, and other Material and Equipment used during the construction. All parts of the Work shall be left in a neat and presentable condition to the satisfaction of the Engineer.

11.04.03. Structures

A. Structures shall have the interiors and exterior surfaces cleaned by a professional industrial janitorial service fully knowledgeable in proper and effective cleaning methods.

B. The structures shall be thoroughly cleaned and shall include, but shall not be limited to, the following cleaning activities:

1. Paint, glazing compounds, and other Material shall be removed from glazing and skylights. Glazing and skylights shall be washed and

polished on both sides. Care shall be exercised so that the glazing is not scratched or damaged.

2. Interior surfaces, including walls, ceilings, light fixtures, doors, jambs, sills, piping, ducts, Equipment, electrical panels and conduits, handrails, guardrails, gratings, pipe trenches, drains, and miscellaneous fixtures shall be cleaned. Stains, spots, dirt, and dust shall be removed.

3. Temporary floor protections shall be removed; floors shall be vacuumed and washed; floors other than concrete shall be waxed and buffed.

4. Door and window hardware shall be cleaned and polished after all traces of stains, dirt, paints, and blemishes are removed.

5. Casework and plastic laminate surfaces shall be cleaned and polished.

6. Marks, stains, fingerprints, soil, and blemishes shall be removed from painted, decorated, or stained interior surfaces.

7. Spots, soil, paint, grout, plaster, concrete, and similar substances shall be removed from tile and the tile shall be washed.

8. Exterior walls, doors, and louvers shall be washed.

9. All interior and exterior signage shall be cleaned.

C. All concrete decks and floors shall be swept and washed. Stains, including oil stains, metal rust, and weld splatter shall be removed. Spills of construction Materials, including paint, concrete, grout, adhesives, insulating Materials, chemicals, and similar Materials shall be removed and the underlying surfaces cleaned.

11.04.04. Streets, Roadways, Concrete Slabs, Sidewalks, and Paved Areas

A. Streets, roadways, concrete slabs, sidewalks, and paved areas shall be cleaned and pressure washed so that they are free of debris, soil, and paint or construction Material spills. Painted construction markings on concrete and pavement shall be removed.

B. All access roads and maintenance roads shall be graded, removing wheel tracks and smoothing up such roads, and restored to their specified condition, or if none specified, to the condition then existing prior to the start of construction.

11.04.05. Storm Drainage Facilities

A. All gutters, V ditches, swales, storm drain pipe inlets, catch basins, drop inlets, and manholes shall be cleaned of soil, vegetation, and debris.

11.04.06. Unpaved Areas

A. Unpaved areas between new facilities and between new and existing facilities shall be cleaned of all debris and construction Material. These areas shall be graded or raked to a smooth uniform surface without leaving holes, depressions, or tire tracks.

THIS PAGE INTENTIONALLY LEFT BLANK

SPECIAL PROVISIONS

THIS PAGE INTENTIONALLY LEFT BLANK

SPECIAL PROVISIONS

SECTION 12. WORK AND CONTRACT TIME(S)

12.01. Summary of Work

A. The Work to be completed under this Contract shall consist of furnishing all tools, equipment, materials, supplies, and manufactured articles and furnishing all labor, transportation and services, including fuel, power, water, and essential communications, and performing all work, or other operations required to construct the Lower Calera Creek Flood Protection Project, all within the City of Milpitas, as illustrated on the Plans and detailed in these Specifications. The project is being constructed to increase channel flood capacity and improve the ecology of the creek system. Any quantities provided in Article 12.01. Summary of Work, are approximate. The Work includes, but is not limited to the following:

1. Compliance with NPDES General Permit, including Storm Water Pollution Prevention Plan preparation, installation, and monitoring of BMP's;

2. Compliance with the project regulatory permits including the Lake or Streambed Alteration Agreement (CDFW), the Waste Discharge Requirements (SFBRWQCB), US Army Corps of Engineers permits, the State Water Resources (NPDES General Permit), and local and municipal permits;

3. Construction site reviews and site conditions monitoring;

4. Develop Contractor's quality control program and implement quality control for the project;

5. Development of a Site-Specific Work Plan for Santa Clara Valley Transportation Authority (VTA) / Bay Area Rapid Transit (BART) and adherence to the approved permit conditions;

6. Conduct noise and vibration monitoring generated from construction activities;

7. Develop a traffic control plan and, upon approval by the City of Milpitas, implement traffic control for the project;

8. Clearing and grubbing within the project limits including removal of trees, and other site vegetation (including existing wetland and riparian species);

9. Demolition of existing driveway access, sidewalk, curb & gutter, sacked concrete, channel concrete lining, concrete floodwalls, concrete foundations, rock riprap protection, utility lines, chain link fence, and other miscellaneous items shown on the Drawings;

10. Design and implement control of water; including proper diversion of upstream drainage and channel flows, diversion of downstream tidal flows, maintaining a dry foundation excavation, and proper handling and disposal of groundwater flows that are required during construction;

11. Design and install a shoring or lateral restraint system for the existing north concrete U-frame wall and other locations shown in the Drawings;

12. Excavation, testing, and disposal of surplus levee and channel materials;

13. Levee construction, including excavation, raising, testing, and placement of materials;

14. Installation of asphalt concrete surface trails, aggregate base maintenance roads and maintenance access, resurfacing of existing aggregate base maintenance roads;

15. Installation of rock riprap slope protection at bridge transitions, and storm drain outfalls;

16. Replacement of existing sidewalk, driveway, curb and gutter in accordance with the City of Milpitas standard details;

17. Construct cast-in-place reinforced concrete retaining walls at maintenance road ramps;

18. Construct cast-in-place reinforced concrete U-frame walls and floodwalls;

19. Install surface texturing to concrete floodwalls and headwalls with decorative patterns as shown on the Drawings;

20. Construct new headwalls at the VTA/BART railroad, North Milpitas Boulevard, and Arizona Avenue bridge locations;

21. Perform potholing as shown on the Drawings for protection of existing utilities within and immediately adjacent to the project limits;

22. Install storm drain pipes, catch basins, outfall, check valves, flap gates and modify existing storm drain outfalls to conform to the new floodwalls and earthen slopes;

23. Install chain link fence and maintenance road gates;

24. Furnish and install a new flood gate;

25. Furnish and install hydroseed and erosion control blanket as shown on the Drawings;

26. Relocation of the existing Comcast communication cables at North Milpitas Boulevard to a below ground facility as shown on the Drawings;

27. Protect existing residential fences during construction of and associated elements of the floodwalls and levees included in the Drawings;

28. Install wetland and landscape plantings, followed by implementation of the three-year plant establishment maintenance period;

29. Perform other miscellaneous construction work and items necessary to complete the work included in the Drawings and Specifications.

12.02. Drawings

A. The drawings entitled “Map and Construction Plan for Lower Calera Creek Flood Protection Project” accompanying these Specifications are made a part thereof.

12.03. Contract Time(s)

A. The Contractor shall complete all Work required under this Contract before the expiration of 1,720 Days from the first chargeable Day of the Contract. The first chargeable Day of the Contract shall be defined in the NTP issued by the District.

B. The Contractor is advised that dry conditions may not exist and that flow in various watercourses encountered in this Project may occur. In no case shall any extension of time be granted if the basis of a Claim is water flowing in a watercourse. No extension of time shall be given because of rain, or because of results of rain, except set forth in these Specifications.

C. Work shall include the following Milestones:

1. Milestone 1: Complete all civil, special structures, planting and all work within the new channel (property line to property line) shown in the Drawings and provided in these Specifications by December 31, 2022.

   a. Milestone 1a: Complete all civil, special structures, planting and all work within the new channel (property line to property line) shown between N. Milpitas Boulevard (E-line Sta 18+50) and the upstream limits of the Project (E-line Sta 41+30) at the end of the first year of construction or December 31, 2021.

   b. Milestone 1b: Complete all remaining civil, special structures, planting and all work within the new channel (property line to property line) shown between N. Milpitas Boulevard (E-line Sta 18+50) and the downstream limits of the Project (E-line Sta 13+00) at the end of the second year of construction or December 31, 2022.

2. Milestone 2: Complete the three-year planting establishment and maintenance period set forth in Section 32, Establishment Maintenance of these Specifications.

D. Milestone Completion

1. The Contractor shall complete Milestone 1 before the expiration of 620 Days from the first chargeable Day of the Contract.

2. The Contractor shall complete Milestone 2 before the expiration of 1,720 Days from the first chargeable Day of the Contract (Project Completion).

E. See Special Provisions Article 12.05. Liquidated Damages, regarding assessments.

12.04. Inclement Weather

A. The time allowance for completion of Work is based upon the inclusion of regular work days for inclement weather, which, pursuant to Standard Provisions Article 3.08.02. Inclement Weather, may be excusable. The Contractor shall determine the average number of weather delays, on a monthly basis, and include them in their Baseline Progress Schedule (Article 5.05.02.) and/or any other updates or reviews to the Baselines Progress Schedule. Inclement weather shall be determined from the U.S. Weather Bureau records for the proceeding three-year period found at http://www.ncdc.noaa.gov/cdo-web/search and the weather prediction software at https://www.ncdc.noaa.gov/data-access/model-data/model-datasets/numerical-weather-prediction. The Contractor shall create a weather calendar in the scheduling software where the weather calendar would have less workdays to reflect the 3-year average of normal inclement weather.

B. The Contractor shall comply with Standard Provisions Article 3.08.02. Inclement Weather.

12.05. Liquidated Damages

A. In accordance with Standard Provisions Article 5.07. Liquidated Damages, the District may assess as Liquidated Damages the following amounts:

1. $5,000 per Day for failure to complete all work of Milestone 1 and 2 on or before the Days required. This includes properly and adequately demobilizing the site to the Engineer's satisfaction at the conclusion of each milestone.

2. $1,000 per Day, per each item, per occurrence, for failure to submit each of the immediate submittals as listed within the time limits allowed.

3. $500 per Day for Contractor's failure to comply with the City of Milpitas requirements for traffic control.

4. $1,000 per Day for failure to submit the Preliminary Progress Schedules, any Detailed Progress Schedules, or master submittal list within the time limits allowed.

5. $2,000 per day beyond October 15 of each calendar year for failure to properly and adequately winterize the site in accordance with the approved SWPPP and to the Engineer's satisfaction.

6. $50 for each truck from the Contractor found to be idling or queuing at the access points or in the surrounding neighborhood without prior approval by the Engineer, except for cases identified under Article 18.07.01. Truck Traffic and Hauling, of these Specifications.

7. $50 for each truck from the Contractor that arrives at the project site before 7:00 a.m.

12.06. Bonus

A. No special requirements.

12.07. Changes

A. No special requirements.

THIS PAGE INTENTIONALLY LEFT BLANK

SECTION 13. GENERAL REQUIREMENTS

13.01. Abbreviations and Acronyms

A. In addition to the abbreviations provided under Section 1 of the Standard Provisions, the following abbreviations and acronyms shall apply for this Project:

ASCA	American Society of Consulting Arborists
BART	Bay Area Rapid Transit
CDFW	California Department of Fish and Wildlife
CO	Contract Change Order
CPM	Critical Path Method
CSI	Construction Specifications Institute
DCM	Design Change Memorandum
FEMA	Federal Emergency Management Agency
HOAs	Home Owners Associations
ICBO	International Conference of Building Officials
OSHA	Occupational Safety and Health Act
PCO	Potential Change Order
RFI	Request for Information
SFPUC	San Francisco Public Utilities Commission
TSMM	Temporary Survey Monitoring Monument
UPRR	Union Pacific Railroad
USACOE	US Army Corps of Engineers
VTA	Santa Clara Valley Transportation Authority

13.02. Definition of Key Terms

A. No special key terms.

13.03. Site Investigation

A. The Contractor shall not be entitled to any adjustment in the Contract Price(s) or in Contract Time(s) if the existence of the condition that caused the alleged impact:

1. could have been reasonably discovered or revealed as a result of examination, investigation, exploration, test, or study of the site and of contiguous areas required by the Contract Documents to be conducted by or for the Contractor prior to commencing the Work; or

2. could have been inferred from the presence of other visible features, such as boulders, buildings, meters, and junction boxes on or adjacent to the site.

13.04. District-Furnished Reports

A. An electronic version of these reports are available on the District's Construction Administration webpage: https://www.valleywater.org/construction.

13.04.01. Geotechnical Reports

A. The design-level geotechnical investigation reports are:

1. "Draft Geotechnical Report — Lower Berryessa Creek Project: Calera and Tularcitos Creek Reaches," by Lowney Associates dated June 16, 2005.

2. "Design Level Addendum — Lower Calera Creek Geotechnical Investigation Report," by TRC dated December 29, 2010.

3. "Geotechnical Design Report — Lower Calera Creek Flood Protection Project," by Cal Engineering & Geology dated January 23, 2019.

4. "Groundwater Monitoring Well Memo – Lower Calera Creek Flood Protection Project" by Cal Engineering & Geology dated January 22, 2019.

B. Reference is made to Standard Provisions Article 2.05. Examination of Drawings, Specifications, and Site of Work.

C. The Contractor shall be aware that the geotechnical reports indicate the presence of water at various locations along the Project alignment. At locations shown on the plans, groundwater monitoring wells were installed to monitor the depth to groundwater and is presented in the memo by Cal Engineering & Geology dated January 22, 2019.

D. These reports are for reference only, and, as such, are expressly deemed not to be a part of the Contract Documents. Any reliance on data contained within such reports is at the Bidder's own risk.

13.04.02. Environmental Reports

A. The environmental reports are:

1. "Phase I Environmental Site Assessment - Lower Berryessa Creek Project: Calera and Tularcitos Creek Reaches," by Lowney Associates dated October 5, 2005.

2. "Lower Berryessa Creek Project Planning Study Report," dated November 2009.

3. "Lower Berryessa Creek Program Final Environmental Impact Report," dated December 2011.

4. "Arborist Report – Calera Creek @ Jacklin Court, Milpitas CA," dated May 28, 2020.

B. The Contractor is advised that these documents are for the Contractor's information only.

13.04.03. Hazardous Material Investigation Reports

A. The following site assessment reports are available:

1. "Phase I Environmental Site Assessment—Lower Berryessa Creek Project, Calera Creek and Tularcitos Creek reaches"—dated October 2005

2. "Phase 1 Hazardous Substance Liability Assessment – 1125 N. Milpitas Boulevard, Milpitas, CA" —dated September 2016

3. "Soil and Ground Water Quality Evaluation" —dated August 2014

4. "Asbestos and Lead Testing for Demolition, Lower Calera Creek" – dated September 30, 2020

5. "Phase II Hazardous Substance Liability Assessment – Lower Calera Creek Flood Protection Project" – dated July 31, 2019

6. "Phase II HSLA Soil and Groundwater Report– Lower Calera Creek Flood Protection Project" – dated March 22, 2018

B. The Contractor shall be responsible for reviewing the investigation and findings and for evaluating the need for, and for providing for, any safety measures it deems necessary. Any such measures shall be considered incidental to the Work; no additional payment shall be made, therefore.

13.04.04. Cultural Resources Report

A. The District has conducted archeological survey and record searches within the project limits. This information is presented in the Lower Berryessa Creek Environmental Impact Report, "Lower Berryessa Creek Program Final Environmental Impact Report"—dated December 2011 and "Lower Berryessa Creek and Lower Calera Creek Flood Protection Project, Milpitas, Santa Clara County, California Cultural Resources Survey Report" – dated April 2015. The Contractor shall refer to Article 18.09. Discovery of Archeological Artifacts and Human Remains.

B. The Contractor shall be responsible for reviewing the investigation and findings, and for evaluating the need for, and for providing for, any measures he/she deems necessary. Any such measures shall be considered as included in the contract prices paid for the various items of work involved and no additional time or compensation will be allowed therefor.

13.04.05. As-Built Documents

A. The as-built and reference drawings are:

1. "Map and General Plan for Calera Creek: From Berryessa Creek to 155 Feet Upstream of Route 680"—dated September 1973.

2. “Improvement Plans Calera Creek – Milpitas Blvd. to Confluence with Berryessa Creek”—dated January 19773.

3. Sheet C7-C13 from “Abel Street Overhead, 2-361”—dated March 75.

4. “Tract 6017 Improvement Plans: Greenbrae Unit No. 1, 2-407”—dated February 1977

5. “Improvement Plans Hanson Court, 2-511”—dated October 1979

6. “Improvement Plans Tract 8027, 2-704”—dated April 1987

7. “Improvement Plans Tracts 8028 & 8029, 2-705”—dated April 1987

8. “Grading & Utility Plan and Right of Way Map for Tract 8027, 2-540” --- dated May 1981

9. “Map and Construction Plan for Calera Creek Floodwalls and Access Bridge at Union Pacific Railroad”—dated May 2001

10. “City of Milpitas Land Development Basemap”

11. “Water Transmission Lines: Curtner Estates Unit No. 1 Tract 2545”—dated May 1960

12. PG&E Distribution Map – dated September 2017

13. Sheet 14-15 from “54-in Sanitary Sewer Project 6044 North Milpitas Boulevard” –dated May 1989.

14. Sheet C3.1 from “Milpitas Self Storage Grading Plan” – dated March 2016.

15. Sheet 4 from “Milpitas Self Storage Public Water Main Relocation Plan” – dated October 2017.

16. “Improvement Plans Calera Creek Milpitas Blvd to Confluence with Berryessa Creek, 2-470” – dated January 1977.

B. The as-built or record documents referenced represent the District’s knowledge of the existing facilities relevant to the planned Work areas for the Project. The as-built or record documents are for reference only; the District does not guarantee their completeness or correctness. The District makes no representation, either expressed or implied, that the conditions indicated in the Drawings, documents, or records are representative of those existing at the Site, or that different conditions may not occur or Material other than that indicated or in proportions different from those indicated may not be encountered.

C. Requirements for the Contractor to field-verify existing conditions are as specified in the Contract Documents.

D. Other subsequent, undocumented improvements may also be present and would not be reflected in the as-built or record documents. Contractor's overall understanding shall be based on the Drawings and on a reasonable understanding of the facilities from a general field inspection.

E. CAD files of the Drawings and Specifications will not be provided to the Contractor. The Contractor may request PDF copies of Drawings. If the Contractor uses the Drawings for any other purpose except as-builts for the Project, all title block information and authors of the Drawings shall be removed.

13.05. Contractor's Engineering and Design

A. The Contractor shall provide engineering and design of the following work components:

1. Shoring and excavation plan, including drawings and calculations by a registered professional engineer in the State of California. Contractor's attention is directed to Article 24.11. Shoring, of these Specifications;

2. Dewatering Plan, for creek and/or tidal water diversion and groundwater dewatering during foundation excavation, including drawings and calculations by a registered professional engineer in the State of California. Contractor's attention is directed to Article 23.05. Control of Water, of these Specifications.

B. See Technical Provisions for additional information.

13.05.01. Seismic Design Criteria

A. Seismic loads and seismic design parameters shall be in accordance with Building Codes, District, FEMA requirements, these Specifications and the Drawings.

B. Design requirements: Design in accordance with the current edition of the California Building Code (CBC) or with applicable, site-specific seismic criteria herein, whichever is more stringent.

13.05.02. Wind Design Criteria

A. Per building codes.

13.05.03. Hydraulic Design Criteria

A. Hydraulic design criteria used shall be in accordance with the U.S. Army Corps of Engineers and the Federal Emergency Management Agency's (FEMA) criteria for 100-year event, or the event that has a one percent chance of occurring in any given year.

B. Tidal information about the San Francisco Bay shall be obtained from NOAA (https://tidesandcurrents.noaa.gov/tide_predictions.html?gid=1393).

C. Design Requirements: Design in accordance with the requirements shown in the Technical Provisions and on the Drawings.

D. Design criteria shall be in accordance with the District, Army Corps of Engineers, and FEMA requirements.

13.05.04. Truck Loading

A. All pre-cast products and traffic support elements used shall be designed for H20-44 truck loading.

SECTION 14. SPECIAL REQUIREMENTS

14.01. Engineer

A. The Designated Engineer of the District shall be the District's representative who assumes all duties and responsibility and has all rights and authority as assigned in the Contract Documents in connection with completion of the work in accordance with the Contract Documents.

B. The Designated Engineer is the Deputy Operating Officer of Watersheds Design and Construction Division.

14.02. Project Signs

A. The Contractor shall install and maintain District-furnished Project identification signs at the locations shown on the Drawings and in accordance with the notes and details thereon and as specified in these Specifications.

B. The signs shall be clearly visible to the public. The bottom edge of the sign shall be as shown on the Drawings. All hardware, posts, and fasteners shall be furnished and installed by the Contractor.

C. The signs are to be picked up at the District warehouse located at:

5905 Winfield Boulevard
San Jose, CA 95123
(408) 630-3800

D. Arrangements to pick up the signs shall be made by contacting the District warehouse at least two (2) working days in advance of the date of when the signs are to be picked up.

E. The Contractor shall be responsible for transporting the signs to the job site and for ascertaining all information, dimensions, connections, and appurtenances required to provide satisfactory installation of the signs.

F. The signs shall be installed prior to the start of construction and shall be maintained until Project Completion. Signs and supports shall be maintained in a neat, clean condition; and damages to structures, framings, or signs repaired until Project Completion. Remove or paint over graffiti and repair signs. Signs shall be straightened whenever they are not plumb.

G. Upon completion and acceptance of the Project by the District, the Contractor shall remove the signs and framing and return them to the District warehouse at 5905 Winfield Blvd. San Jose, CA 95123. Arrangement to return the signs shall be made by contacting Winfield Warehouse at (408) 265-2607, extension 3800, at least two (2) working days in advance of the date of when the signs are to be returned. The Contractor shall restore the sign-removal areas, backfill holes with soil and/or repair previous pavement saw cuts in kind, and clean the surrounding areas.

H. Sign Installation

1. Project signs furnished by the District will be approximately four (4) feet wide and up to eight (8) feet high.

2. Sign support structure shall be two (2) 4-inch x 4-inch (surfaced four [4] sides) pressure-treated-wood post supports (grade No. 2 or better, straight, with no loose knots), one on each side of the sign. Fasten posts to District-furnished signboard with 4-inch-long minimum deck screws through posts, 8 inches on center. Top edges of each post shall have a 0.5-inch chamfer all around. Two-thirds of the height of each sign board shall be fitted into a nominal 0.75-inch-deep dado (verify in field) centered on each support post.

3. Mounting hardware shall be galvanized steel, concealed or recessed fasteners.

4. Posts shall be painted with exterior quality paint, white semi-gloss, as specified in the Drawings.

5. Finishes and paints shall be adequate to withstand continuous exterior weathering for four (4) years without fading or damage to the appearance.

6. Sign support posts shall be installed plumb with a minimum of three (3) feet of burial in 12-inch-minimum diameter holes backfilled with concrete. The bottom of sign board shall be approximately 12 to 18 inches above grade as directed by Engineer. The top of the concrete shall be sloped away from posts all around.

7. Pull boxes for Project flyers shall be installed on the Project sign as directed by the Engineer. Pull-box flyers will be maintained by the District.

14.02.01. Payment

A. Full compensation for doing all Work necessary to pick up and install the District furnished signs shall be included in the lump sum price bid for MOBILZATION AND DEMOBILIZATION, Bid Item No. 7, if authorized by the District.

14.03. Office Facilities

14.03.01. Engineer's Office

A. The Contractor shall provide and maintain office facilities as described for the exclusive use of the Engineer and of representatives of the Engineer. The location and condition of the office facilities shall be as approved by the Engineer. The Contractor shall furnish weekly janitorial services in connection with the office for the duration of the Work.

B. Office facilities and furniture shall be clean and in good condition, consistent with common professional offices, and shall be approved by the Engineer.

C. The Contractor shall provide a broadband Internet service connection for the exclusive use of the District's Engineer and of authorized representatives.

1. Broadband Internet Service

a. Broadband connection shall meet the definition of the U.S. Federal Commission as any connection to the Internet with a minimum download speed of 150 Mbps and minimum upload speed of 50 Mbps or faster in at least one (1) direction.

b. The broadband connection shall consist of any of the following technologies:

(1) Wireless, which is typically made up of on-the-ground, antenna-to-antenna systems, commonly called "fix-wireless" systems. At least three (3) access points shall be provided for wireless internet.

(2) Satellite, which is provided by direct broadcast satellite (DBS) companies focusing only on Internet connections.

c. The service connection shall include all necessary software and hardware, such as Ethernet cards and modems, and will be compatible with latest supported Microsoft Windows 10 Professional operating system.

D. The building or trailer shall be specifically designed for office facilities including the conference table and chairs (for up to ten people) and shall not be less than 12 feet x 60 feet in the plan, with side walls not less than 8 feet high. The Contractor shall perform temporary site grading for installation of the Engineer and Contractor's office trailers, if necessary.

E. The Contractor shall furnish and install one (1) table or counter for use in viewing Drawings; four (4) desks with a top dimension of not less than 4 feet x 2.5 feet each; four (4) swivel chairs; one (1) wall-mounted, underwriter-laboratory-approved fire extinguisher 10# (ABC type); one (1) 16-unit first aid kit (the contents replenished as used); and one (1) two-drawer legal-size file cabinet. Adequate heat, light, electricity, and ventilation, including air conditioning, hot and cold drinking water, broadband Internet services, and toilet facilities shall be provided.

F. The office trailer shall have four offices plus unisex bathroom. There shall be at least one operable, screened window per office room. All windows shall be fitted with mini-blinds. Each trailer room shall be adequately lighted, heated, ventilated, and air conditioned. HVAC equipment shall be capable of maintaining a 70-degree F temperature within each trailer. At least 6 air changes per hour

shall be provided in all rooms except the toilet room, which shall have 10 air changes per hour.

G. Provide fluorescent type lights inside suitable for office use. At least 70-foot candles of initial uniform lighting at desk level shall be provided in all rooms except the toilet room, which may have 30 foot-candles. Provide a weatherproof outside light fixture near each entrance door.

H. The Contractor shall provide a unisex toilet facility, with water connections, and a holding tank drain and waste system for the toilet room. The toilet room shall contain a flush-type water closet, a lavatory sink with hot and cold water, a mirror, an electric 5-gallon water heater, toilet and paper towel dispensers, and a waste receptacle. The Contractor shall maintain and replenish the supply of toilet paper and paper towels during the duration of the work. The Contractor shall pump the holding tank empty whenever it is 75% full during the work and keep it adequately charged with chemicals.

I. The Contractor shall clean the Engineer's office on a regular basis, at least weekly, for the duration of the work.

J. The Contractor shall furnish the following new equipment which will be transferred over to the District at the completion of the project:

1. For field access to ProjectWise system, the Contractor shall provide for the exclusive use of the Engineer throughout the duration of the work, a total of two, for the use of the construction staff, 256 GB Apple iPad Air 10.5" (WiFi + Cellular) with Logitech Slim Combo with Detachable Keyboard case or equal, within 21 days of the notice to proceed. Contractor shall provide and pay for monthly cellular access (14 GB/mo. min.) on any network for the specified duration of the project.

K. Besides the aforementioned items, the following equipment and furnishings shall be provided and installed by the Contractor for the exclusive use of the Engineer throughout the duration of the work. These items shall be provided at the same time that the Engineer's office is provided. The Contractor shall be responsible for all maintenance, repair, and technical support required for the supplied equipment. The Contractor shall retain ownership of these equipment and furnishings after Final Completion.

1. Bottled drinking water "cooler" with hot and cold water, small refrigerator, microwave oven, coffee machine, and paper cup dispenser. Provide five 5-gallon water bottles and 400 paper cups each month for the duration of the work.

2. 1 (one) 48-inch by 72-inch and 1 (one) 36-inch by 48-inch dry erase presentation white boards (mounted properly within the trailer's inner walls, to the Engineer's satisfaction)

3. A color printer, scan and copy machine capable of the following:

    a. At minimum, able to copy 30 ppm for black copies and 10 ppm for color copies.

    b. Up to 11” x 17” paper size capability.

    c. Document feeder—minimum 25 sheet capacity.

    d. Scanning capability into a pdf format, which allows wireless transmission capability.

    e. Ability to serve as a network printer, with capability to print wirelessly from all computers that are connected to the broadband system.

4. Three waste receptacles.

5. One garment rack with top storage shelf, umbrella holder, and space for a minimum of 6 clothes hangers.

6. Three LED desk lamps that can be table mounted, each with adjustable arm for changing fixture location and angle.

L. All Contractor-furnished equipment for the Engineer’s office shall be new.

M. The office shall be fully operational within 15 days from the Notice to Begin Work. For any days, if the office does not have the specified items and/or items not in working condition, the District will deduct the prorated amount from the progress payments and no less than $100 per day.

N. Contractor shall request and obtain a street address for trailer from City of Milpitas.

O. Contractor shall assume installation of green screen fencing around the trailer area, if the City of Milpitas requires, at any time until Project Completion. If required, Contractor shall install such fencing at own cost and paid for under the lump sum price bid for MOBILZATION AND DEMOBILIZATION, Bid Item No. 7, if authorized by the District.

14.03.02. Contractor’s Office

A. The Contractor shall provide and maintain at the project site a suitable trailer office for Contractor’s use. In addition, the Contractor’s office shall provide and maintain a District office (trailer) adjacent to the Contractor’s trailer. Location and condition of the office facilities shall be approved by the Engineer. At this office shall be kept project copies of the Contract Documents, project progress records, all progress schedules, submittals, and other relevant documents, which shall be accessible to the Engineer and to other District employees during normal working hours.

14.03.03. Removal and Disposal

A. Office facilities, furnishings, and/or Equipment specified in this Special Provisions Article 14.03. Office Facilities, shall be furnished, installed, and in operating condition prior to performing any other Contract Work under the Contract.

B. Prior to issuance of the Project Completion letter by the District, the Contractor shall remove and dispose of its temporary facilities, Material, and Equipment and restore the site to its original or better condition.

14.03.04. Payment

A. Full compensation for doing all Work necessary to provide office facilities, including operating and maintenance costs as specified herein, shall be included in the lump sum price bid for MOBILIZATION AND DEMOBILIZATION, Bid Item No. 7, if authorized by the District.

14.04. Use of District Facilities

A. No special requirements.

14.05. Temporary Utilities

A. Temporary Electrical Power: All electrical power for the Contractor's construction operations, offices (both Engineer's and Contractor's), storage spaces, lighting, testing, heating, cooling, ventilating, and security and to support other temporary utilities and facilities described herein shall be provided and paid for by the Contractor. The Contractor shall arrange with the Local electrical utility, at no additional cost to the District, the provision and removal of adequate, temporary electrical service and/or the provision of a temporary electrical generator. The location of the temporary electrical service Equipment will be subject to the approval of the Engineer.

B. Temporary Lighting: The Contractor shall provide temporary lighting in all Work areas sufficient to maintain a lighting level during working hours not less than the lighting level required by California OSHA standards. As permanent lighting facilities are completed, these may be used in lieu of temporary facilities, provided, however, that bulbs, lamps, or tubes of such facilities used by the Contractor are replaced immediately prior to final Acceptance of the work. All temporary exterior lighting shall be shielded and directed downward and toward the project site to minimize its effects on the neighbors.

C. Temporary Heating, Cooling, and Ventilation: The Contractor shall provide means for heating, cooling, and ventilating all Work areas as may be required to protect the Work from damage by freezing, high temperatures, and weather or to provide a safe environment for workers. Unvented, direct-fired heaters shall not be used in areas where freshly placed concrete will be exposed to the combustion gases until at least two (2) hours after the concrete has attained its initial set.

D. Temporary Water: The Contractor shall (i) pay for and construct facilities necessary to furnish potable water for human consumption and non-potable water for use during construction; (ii) provide backflow-prevention devices properly sized for use on the metered, potable water connection; and (c) post ample signs throughout the Work area warning of the usage of non-potable water if non-potable water is being used.

E. Temporary Sanitary Facilities: Sanitary facilities for the Contractor and all Subcontractors shall be provided by the Contractor. Sanitary facilities shall be of reasonable capacity, properly maintained throughout the construction period, and obscured from public view wherever possible. At least one (1) toilet shall be provided for every 20 workers.

F. Solid and Liquid Waste Disposal: The Contractor shall provide a sufficient number of waste receptacles, dumpsters, and bins to contain all solid and liquid waste generated from construction operations. Existing waste receptacles owned by the District shall not be used by the Contractor. Waste receptacles shall be emptied weekly at a minimum and more frequently when full.

G. Temporary Fire Protection: The Contractor shall provide portable, UL-rated, 20#, Class-A fire extinguishers at temporary Contractor, Engineer, and similar office spaces. In all other areas of construction operations, provide UL-rated, 20# or larger, Class-ABC, dry-chemical extinguishers or a combination of NFPA-recommended classes for the exposure. Comply with NFPA 10 and 241 for classification, extinguishing agent, and size required by location and class of fire exposure. Comply with the Uniform Fire Code and Cal/OSHA regulations for the number of fire extinguishers.

H. Temporary Propane Service: If required for construction operations and temporary facilities, the Contractor shall arrange with a Local propane vendor, at the Contractor's own cost, to provide adequate, temporary propane service. The Contractor shall also obtain and pay for all required permits and fees from authorities having jurisdiction. The Contractor shall pay all charges from the utility or vendor, including charges associated with the removal of the service at the end of the Work. The location of the temporary propane service Equipment shall be mutually agreeable to the Contractor and to the Engineer. The Contractor shall provide all gas distribution system piping, regulators, and other incidentals necessary for safe service. Comply with NFPA 54, 55, and 58 as applicable to this Work.

I. Temporary Compressed Air: The Contractor shall provide compressors for compressed air for construction operations as required. Use of existing or new plant air compressor systems for construction operations is prohibited.

J. The temporary utilities in this Article shall be furnished, installed and in operating conditions prior to performing any other contract work under the Contract and shall be removed and disposed of within 30 days upon completion and acceptance of the Project by the District.

14.05.01. Payment

A. Full compensation for doing all Work necessary to provide temporary utilities shall be included in the lump sum price bid for MOBILIZATION AND DEMOBILIZATION, Bid Item No. 7, if authorized by the District.

14.06. Staging Area

A. Except for the staging area shown in the Drawings, the Contractor is responsible for identifying and securing additional staging areas with the approval of the Engineer. The Contractor shall be fully responsible with any associated costs for use of the staging areas and shall fully abide with any restrictions prescribed by the property owner for use of the staging areas, including any pertinent local, regulatory, or utility permit restrictions. The Contractor shall abide with the specific restrictions set forth for staging areas as described in the regulatory permits for the Project.

B. Unless prior approvals are obtained from both the property owner and the District, the Contractor shall use any staging area only for the benefit of the Project.

C. Staging areas that are not already paved or covered with compacted aggregate base and that are used for parking vehicles and trailers; or for workshops, maintenance areas, Equipment, piping, formwork, rebar; or for storing masonry on pallets and metal product storage shall be graded, as required, and surfaced with a minimum of three (3) inches of compacted, aggregate-base rock over a high-modulus, woven, soil-separation geotextile. Areas storing aggregate base or other rock products shall also be placed on this same geotextile. The objective is to maintain separation between native and construction Material. Areas storing soils and sand are not required to be surfaced with aggregate-base course.

D. Aggregate base shall be removed from all staging areas prior to Project Completion; surfaces shall be regraded to their original grades or to matching surrounding conditions as directed by the Engineer.

E. Any soils contaminated with petroleum product or other Hazardous Material by the Contractor shall be removed by the Contractor and disposed of in accordance with Federal, State, and Local laws.

F. The Contractor is responsible for weed control in staging and Material storage areas.

G. Contractor shall restore staging areas to original condition or better, with the final approval of the property owner. Any impacts as a result of the Contractor's use of the staging areas shall be fully mitigated for by the Contractor. Costs associated with implementation of the mitigation shall be solely borne by the Contractor.

H. The Contractor's attention is directed to the Final Lake or Streambed Alteration Agreement (CDFW) in Appendix C, Measure 2.12: "Staging and storage areas for vehicles, equipment, and any other materials shall be located outside of the stream channels and banks. Stationary equipment such as motors, pumps, generators, compressors, and welders, located within or adjacent to the stream channels shall be positioned over drip-pans. Any equipment or vehicles driven and/or operated within or adjacent to the stream channels shall be checked and maintained daily, to prevent leaks of materials that if introduced to water could be deleterious to aquatic life. Vehicles shall be moved a minimum of 65 feet away from any stream channels prior to refueling and lubrication."

14.06.01. Payment

A. Full compensation for doing all Work necessary to provide staging areas as specified herein shall be included in the lump sum price bid for MOBILIZATION AND DEMOBILIZATION, Bid Item No. 7, if authorized by the District.

14.07. District-Furnished Material and Equipment

A. The District will furnish the following materials to the Contractor. The Contractor shall install the District-furnished Material at the locations shown on the Drawings.

- Two (2) Project signs
- Nursery container plants for the floodplain depression zone planting; other plants including landscape plants at N. Milpitas Blvd location shall be furnished by the Contractor.

B. The Contractor's attention is directed to Special Provisions Article 14.02. Project Signs, regarding arrangements to pick up the Project signs.

C. The Contractor shall be responsible for the transportation of District-furnished Material to the job site and to ascertain all information, dimensions, connections, and appurtenances required to provide for satisfactory installation of all District-furnished Material.

14.07.01. Assignment of Contract for District-Procured Material

A. No special requirements.

14.08. Salvaged Material and Equipment

A. Materials designated to be recycled/salvaged by the Contractor shall be in accordance with Article 19.06. Solid Materials Management, of these Specifications. All materials to be salvaged by the Contractor will be handled and

removed with care and reused in accordance with these Specifications and as shown on the Drawings. The following items shall be salvaged:

- A wooden post and warning signs on Hanson Court.
- A warning paddle on Hanson Court.
- Six signs (6) fastened on chain-link gate on Arizona Avenue.

B. The Contractor shall provide all Equipment and labor necessary to load, deliver, and unload the salvaged Material. All salvaged materials shall be reinstalled in the locations shown on the Drawings.

C. The Contractor shall notify the Engineer at least five (5) working days prior to commencing any clearing and grubbing operations. All trees not designated for salvage by the Engineer shall be the Contractor's responsibility to remove from site and recycle/salvage/dispose of in accordance with Article 19.06. Solid Materials Management, and Article 23.02. Clearing and Grubbing, of these Specifications.

14.09. Tools and Spare Parts

A. No special requirements.

14.10. Operation and Maintenance Documents

A. Contractor shall provide warranty information, operation and maintenance documentation from the manufacturer for the following parts:

1. Check valves and flap gates
2. Flood gate
3. Plant irrigation equipment

B. Operation and maintenance documents shall be submitted and approved by the Engineer before the completion of Milestone 1.

14.11. Maintenance of Record Documents

A. The Contractor shall maintain at the site the following record documents:

1. As-Built Drawings (full size).

2. Specifications and Addenda.

3. Favorably reviewed submittals, including shop Drawings, product data, samples, calculations, and other submittals.

4. PCOs, Change Orders, DCMs, field orders, and other Contract modifications.

5. Field and shop testing records.

6. Survey records.

7. Correspondence.

8. Approved samples.

9. Approved SWPPP, including monitoring reports and daily activities.

B. The Contractor shall provide files and racks for orderly storage of the documents; maintain the documents in clean, dry, legible condition, and make all documents and samples available during regular business hours for inspection and reproduction by the Engineer.

C. The Contractor shall keep the record documents current with construction in progress. Completed construction Work shall not be permanently concealed until required information has been recorded on the As-Built Drawings.

14.11.01. As-Built Drawings

A. The Contractor shall refer to the guidelines for as-built mark-ups. An electronic version of the guidelines are available on the District's Construction Administration webpage: https://www.valleywater.org/construction.

B. The Contractor is required to keep on-site and available for inspection at any time an accurately marked, legible, up-to-date set of Contract Drawings (as-built Drawings) for the Work installed. The Contractor shall record as the Work progresses changes to the original Contract Drawings, including, but not limited to, the following items:

1. Field changes or adjustments in the final location or in the final dimensions or details of the Work.

2. Changes resulting from RFIs, Change Orders, DCMs, and other Contract modifications.

3. Locations of underground and above-ground utilities and appurtenances referenced to permanent, accessible features of the Work.

4. Details not included in the original Contract Drawings but incorporated into the Work, referenced to approved shop Drawings, product data, samples, calculations, or other submittals.

5. Location of items embedded or concealed from view (e.g., conduits, cables, junction boxes, piping, etc.).

C. Changes shall be clearly described on the Drawings by note as required.

D. All entries shall be dated. The as-built Drawings shall be kept in a safe place and protected from damage by weather and manhandling. As-built Drawings shall be stored apart from documents used for performing the Work and shall be kept in a

dry, legible condition and in good order. Do not use as-built Drawings for construction at the job site.

E. Changed Work or conditions of the Work covered up or concealed by the Contractor in advance of recordation on the as-built Drawings shall be uncovered to allow accurate recordation of the change then re-covered all at the Contractor's expense.

F. Changes shall be marked directly on the Contract Drawings. If there is insufficient space on a Drawing to mark up the change, the Contractor shall draw additional sketches to completely show the change and shall attach the sketches to the Drawing.

G. The Engineer has the right to review the Contractor's as-built Drawings at any time to ascertain that they are being kept up to date and that they show sufficient detail. Should the Contractor's as-built Drawings not be up to date or should they lack necessary detail per the as-built guidelines, the Engineer may withhold five (5) percent from each monthly progress payment until the Drawings are deemed acceptable by the Engineer. Such review by the Engineer shall not relieve the Contractor of its responsibility for keeping the as-built Drawings current and complete.

H. The construction as-built Drawings shall be stamped "As-Built" and shall be, at completion of construction, signed and dated by the Contractor and submitted as required in Article 11.03.01. As-Built Drawings, except as modified herein. The Contractor shall provide two (2) additional full-sized hardcopies of the "As-built" documents for the City of Milpitas. A total of three (3) full-sized hardcopies of the "As-builts", one (1) for the District and two (2) for the City of Milpitas, shall be required.

14.12. Emergency Work

A. The Contractor shall have personnel available on call for emergency Work connected with those improvements, tie-ins, and modifications being completed as part of this Work. Contractor on-call personnel shall be able to be on-site within two (2) hours of verbal notice, 24 hours a day, seven (7) days a week. Telephone numbers for these individuals shall be provided to the Engineer and shall be kept current.

14.13. Dispute Review Board

A. A Dispute Review Board (DRB) process is not required but may be requested by the Contractor. Contractor's attention is directed to Standard Provisions Article 3.13. Dispute Review Board.

14.14. Escrow Bid Documents

A. The Contractor shall prepare and submit to the Engineer the Escrow Bid Documents in accordance with Article 3.14. Escrow Bid Documents.

B. Each Subcontractor whose total subcontract price exceeds 1.5 percent of the total price proposed by the Bidder shall provide separate Escrow Bid Documents to be included with those of the Bidder.

14.15. Professionally Facilitated Project Partnering

A. Professionally Facilitated Project Partnering (PFPP) is not required.

14.16. Insurance

A. Without limiting the Contractor's indemnification of, or liability to, the District, the Contractor shall provide and maintain at its own expense during the term of this Contract or as may be further required herein the following insurance coverages and provisions.

1. The Contractor shall provide its insurance broker(s)/agent(s) with a copy of these requirements and warrants that these requirements have been reviewed by the Contractor’s insurance agent(s) and/or broker(s) who have been instructed by the Contractor to procure the insurance coverage required herein.

2. In addition to certificates, the Contractor shall furnish the District with copies of original endorsements affecting coverage required herein. The certificates and endorsements shall be signed by a person authorized by the insurer to bind coverage on its behalf. All endorsements and certificates are to be received and approved by the District before the Contract commences. In the event of a Claim or dispute, the District has the right to require the Contractor's insurer to provide complete, certified copies of all required, and pertinent insurance policies, including endorsements affecting the coverages required herein.

B. The Contractor shall, at its sole cost and expense, procure and maintain during the entire period of this Contract through Acceptance of the Work by the District’s Board of Directors the following insurance coverage(s).

14.16.01. Required Coverages

A. Commercial general/business liability insurance with coverage as indicated.

1. **$5,000,000** per occurrence/**$5,000,000** aggregate limits for bodily injury and property damage.

2. **$5,000,000** products/completed operations hazard aggregate to be maintained for at least three (3) years following acceptance of the Work by the District.

3. General liability insurance shall include the following:

   a. Coverage at least as broad as found in standard ISO Form CG 00 01.

   b. Be written on standard ISO forms, or inspected by the District Risk Manager.

   c. All Declaration pages and list of endorsements (General Contractor only).

   d. Premises and operations.

   e. Contractual liability expressly including liability assumed under this Contract.

   f. For work near the BART/VTA railroad, a railroad protective policy with coverage of **$2,000,000** per occurrence/**$6,000,000** annual aggregate shall be provided.

   g. Owners and contractors' protective liability.

   h. Severability of interest.

   i. Explosion, collapse, and underground hazards, (X,C, and U).

   j. Broad form property damage liability with completed operations.

   k. If the standard ISO form wording for "Other Insurance" or other comparable wording is not contained in the Consultant's liability insurance policy, an endorsement shall be provided that states the insurance will be the primary insurance and that any insurance or self-insurance maintained by the District, its Directors, officers, employees, agents, or volunteers will be in excess of the Consultant's insurance and will not contribute to it.

   l. Contain no restrictive exclusions (such as but not limited to CG 21 53, CG 21 44, or CG 22 94).

   m. Use of independent contractors.

B. Business auto liability insurance with coverage as indicated.

   1. $**5,000,000** combined single limit for bodily injury, including death, and property damage per occurrence, covering all owned, non-owned, and hired vehicles.

C. Builders' risk (course of construction) insurance.

1. Covering all risks of loss less policy exclusions for an amount equal to the completed value of the Project with no coinsurance penalty provisions. Builder's Risk policy shall name Santa Clara Valley Water District as the loss payee.

D. Workers' compensation and employer's liability insurance.

1. Statutory California workers' compensation coverage covering all Work to be performed for the District.

2. Employer liability coverage for not less than **$1,000,000** per occurrence for bodily injury or disease.

E. Surety bonds

1. The Contractor shall provide the following surety bonds:

a. A Bid bond as specified in the Notice to Bidders.
b. A performance bond as required by the Notice to Bidders.
c. A payment bond as required by the Notice to Bidders.

F. Environmental Pollution Liability: In the event that Hazardous, contaminated Material is discovered during the course of the Work and the Contractor or its Subcontractor is required to perform abatement or disposal of such Material, then the Contractor or its Subcontractor who performs abatement of Hazardous or contaminated Material removal shall maintain in force, throughout the term of this Contract, the Contractor's pollution liability insurance with limits not less than $1,000,000 for each occurrence combined single limit (true occurrence form), including coverages for on-site or off-site third-party claims for bodily injury and property damage.

14.16.02. General Requirements

A. Additional Insured Endorsement(s): The Contractor shall provide an additional insured endorsement for commercial general/business liability, railroad protective liability, and business automobile liability coverage naming the Santa Clara Valley Water District, its Directors, officers, employees, and agents, individually and collectively, as additional insured and shall provide coverage for acts, omissions, etc. arising out of the named insureds' activities and Work. Endorsements shall use ISO CG 20 38 for on-going operations, as well as ISO CG 20 37 for completed operations or endorsements at least as broad. The following shall also be added to the additional insured endorsement:

1. City of Milpitas and it's officers, officials, employees, agents, and authorized volunteers

2. Santa Clara Valley Transportation Authority (VTA)

3. Bay Area Rapid Transit (BART)

4. Union Pacific Railroad (UPRR)

5. Milpitas Materials Company

6. North Milpitas Self-Storage

7. PG&E

8. Comcast Cable

B. Primacy Clause: The Contractor's insurance shall be primary and non-contributary with respect to any other insurance that may be carried by the District and City of Milpitas, its officer, agents, and employees; the District's coverage shall not be called upon to contribute to or share in the loss.

C. Cancellation Clause Revision: The Certificate of insurance shall provide a 30-day notice of cancellation (10-day notice for nonpayment of premium). **NOTE**: The standard wording in the ISO certificate of insurance is <u>not</u> acceptable. The following words shall be crossed out or deleted from the standard cancellation clause: ". . . endeavor to . . ." AND ". . . ; failure to mail such notice shall impose no obligation or liability of any kind upon the company, its agents, or its representatives."

D. Acceptability of Insurers: All coverages shall be issued by companies admitted to conduct business in the State of California that hold a current policyholder's alphabetic and financial size category rating of not less than A-V according to the current *Best's Key Rating Guide* or to a company of equal financial stability that is approved by the District's risk management administrator.

E. Self-Insured Retentions or Deductibles: Any deductible or self-insured retention shall be declared to and approved by the District. At the option of the District, either (i) the insurer shall reduce or eliminate such deductibles or self-insured retentions as respects the District, its officers, officials, employees, and volunteers; or (ii) the Contractor shall provide a financial guarantee satisfactory to the entity guaranteeing payment of losses and related investigations, claim administration, and defense expenses.

F. Subcontractors: The Contractor shall require each of its Subcontractors of any tier to carry the aforementioned coverages, or the Contractor may insure Subcontractors under its own policies.

G. Amount of Liability Not Limited to Amount of Insurance: The insurance procured by the Contractor for the benefit of the District shall not be deemed to release or limit any liability of the Contractor. Damages recoverable by the District for any liability of the Contractor shall, in any event, not be limited by the amount of the required insurance coverage.

H. Coverage to be Occurrence Based: All coverage shall be occurrence-based coverage. Claims-made coverage is not allowed.

I. Waiver of Subrogation: The Contractor agrees to waive subrogation against the District, the Santa Clara Valley Transportation Authority, and the City of Milpitas and its officers, officials, and employees, to the extent that any loss suffered by the Contractor is covered by any commercial general liability policy, business automobile liability policy, workers' compensation policy, or builders' risk policy described in Article 14.16.01. Required Coverages. The Contractor agrees to advise its broker/agent/insurer about this provision and obtain any endorsements, if needed, necessary to ensure the insurer agrees.

J. Noncompliance: The District reserves the right to withhold payments to the Contractor in the event of Material noncompliance with the insurance requirements outlined above.

K. The Contractor shall mail or deliver the certificates and endorsements on ACCORD Form 25-S to:

Contract Administrator
Santa Clara Valley Water District
5750 Almaden Expressway
San Jose, CA 95118

L. IMPORTANT: The certificate of insurance shall include the name of the Project and the name of the District contact person or unit for the contract.

M. For any questions, the Contractor's insurance broker is advised to call the District Risk Management Administrator at (408) 630-2213.

THIS PAGE INTENTIONALLY LEFT BLANK

SECTION 15. GENERAL COORDINATION

15.01. Meeting Requirements

A. This Article includes requirements for scheduling, attending, and conducting Project meetings for the purpose of addressing issues related to the Work and for reviewing and coordinating progress of the Work. Project meetings include the preconstruction meeting, progress meetings, coordination meetings, and special meetings as specified herein.

B. Qualifications of meeting participants: Representatives of firms and organizations participating in each meeting shall be qualified and authorized to act on behalf of the firm or organization they represent.

15.01.01. Preconstruction Meeting

A. The purpose of the preconstruction meeting is to review the Project, designate responsible personnel, and inform the Contractor of the District's Contract administrative procedures, correspondence communication protocol, and other special requirements of the Contract. The Contractor shall come prepared to discuss its staffing, how it will successfully perform the Work, and discuss its plan for temporary utilities, safe Work environment, environmental compliance, emergency response, and any tie-ins, outages, or shutdowns. The Contractor shall also be prepared to review and discuss the Contractor's markup breakdown, Change Order pricing structure, the Standards to be used on the Project, and what the Contractor shall provide as backup for Change Orders or for extra Work pricing.

B. The Engineer will arrange the preconstruction meeting and will notify the Contractor regarding the meeting time, date, and place. The meeting shall be attended by the Contractor and its Superintendent and all representatives of Subcontractors or suppliers whom the Contractor may desire to invite or whom the District may request with the intent being a full understanding of the issues discussed by all parties. The Engineer shall prepare the agenda, preside at the meeting, and record meeting minutes.

15.01.02. Progress Meetings

A. The Engineer shall conduct progress meetings on a regular weekday and at a time mutually agreed to by the Contractor and by the Engineer. The purpose of the progress meetings is to review construction progress; submittal status; Potential Change Order, Change Order, and DCM status; construction safety issues and concerns; conflicts; environmental compliance; public/neighborhood issues; progress payments; and any other subject as deemed appropriate.

B. The Contractor shall allow for one (1) meeting a week.

C. Subject to the Engineer's approval, the frequency of the progress meetings may be reduced at the beginning and at the end of the construction period.

D. The Contractor's superintendent, suppliers, and Subcontractors shall attend the meetings as required. Third parties, such as agency representatives and utilities, may be invited by the Engineer to attend as deemed appropriate.

E. Typical agenda. Typical agenda items can include:

1. Review and approval of previous meeting minutes.

2. Review of progress since the previous meeting.

3. Contractor's Progress Schedules, including Look-Ahead Schedules.

   a. Review of off-site fabrication and delivery schedules.

   b. Problems that may affect the Contractor's schedule performance.

   c. Corrective measures to recover from forecasted Delays whether Excusable or Inexcusable. Precipitation forecasts shall be considered when planning construction activities. Construction activities shall cease and all necessary erosion control measures shall be implemented prior to the onset of substantial precipitation defined as 0.5 inch or more within a 24-hour period. Construction activities that are halted due to precipitation may resume

   d. precipitation ceases and the National Weather Service 72-hour weather forecast indicates a 20% or less chance of precipitation. Weather forecasts shall be documented upon request by CDFW.

   e. Updates and/or revisions to the Contractor's Detailed Progress Schedules.

4. Interface with operations.

5. Safety and security.

6. Review of submittals schedule.

7. Status of RFIs.

8. Field observations, problems, and conflicts.

9. Status of QC inspections and corrections.

10. Environmental issues.

11. Housekeeping.

12. Status of submittal review.

13. Status of PCOs.

14. Status of COs.

15. Other business.

16. A review of the monthly billing once per month.

15.01.03. Coordination and Special Meetings

A. The Engineer shall conduct other coordination and special meetings in addition to progress meetings when appropriate. The purpose of these meetings is to discuss and coordinate shutdowns, outages, utility tie-ins, and any other special issues as deemed necessary.

B. The Contractor shall schedule meetings with manufacturers and installers of major units of construction that require coordination between Subcontractors. Major units of construction that require pre-installation meetings include:

1. Articulated Concrete Block
2. Shoring or lateral restraint system for existing U-frame wall
3. Flood gate
4. Comcast Cable utility relocation
5. Plant installation
6. Plant establishment

C. Date, time, and location for coordination and special meetings shall be as mutually agreed to by the Engineer and by the Contractor. The Contractor shall ensure attendance of appropriate Contractor staff, Subcontractors, and suppliers.

D. Participation by teleconferencing is acceptable when approved by Engineer.

15.02. Integration and Coordination with District Operations

15.02.01. Overview of Existing Systems and Facilities

A. The following is a cursory overview of typical processes, functions, and work within the Lower Calera Creek Channel. Not all items listed are shown on the Drawings.

1. Storm Water Conveyance 24 hours per day, every day of the year.

2. Storm water outfall into the channel 24 hours per day, every day of the year.

3. Operation and Maintenance of Public and Private Streets.

4. Access to adjacent properties.

5. Channel maintenance upstream and downstream of the Project by District staff before/after storm events as necessary.

6. Maintain fencing to separate private properties from channel.

15.02.02. Requirements of an Operational Facility or System

A. The Lower Calera Creek Channel is the regular conveyance of storm water for a large drainage basin within the Santa Clara Valley. Water conveyance for this facility must continue at all times, 24 hours a day, every day of the year until Project Completion. Facilities or conditions required to keep the existing channel operational include, but are not limited to, the following:

1. Channel storm water runoff conveyance, tidal water, high groundwater, and perennial water from upstream sources. See Article 23.05. Control of Water, of these Specifications.

2. All storm water runoff entering the channel through storm drain outfalls, overland conveyance or other means shall be accommodated 24 hours per day, every day of the year per Article 23.05. Control of Water, of these Specifications.

3. Public and private street traffic and pedestrian access shall be maintained per Article 18.06. Traffic Control, of these Specifications.

4. Access to properties owned by others shall be accommodated per Article 16.06. Access to Properties Owned by Others, of these Specifications'

B. Cooperate with District, conduct the work, and provide temporary facilities and accesses required to maintain channel access before, during, and after storm events.

C. The Milpitas Materials Company concrete plant must stay operational throughout the entire duration of the Project. Its business hours are Monday-Saturday from 6 a.m. to 6 p.m. The Contractor shall notify Milpitas Materials Company at least 48 hours in advance of any work affecting their operation.

15.03. Coordination of Work Activities

15.03.01. Work by Others

A. The Contractor shall coordinate its Work with the planned or ongoing Work of the District or of other District Contractors within or adjacent to the limits of the Contract Work in accordance with Article 4.15. Cooperation with Others. No additional payment shall be made or Claims considered for Delay caused due to the Contractor's failure to coordinate the Work.

B. The Contractor shall complete the following activities as requested by the Engineer to assist in the coordination of Contract Work with Work by others: attend planning meetings; review and comment on Project documents relative to coordination aspects; schedule Work to promote efficient installation of all improvements; move Equipment, Material, or vehicles to allow Work by others to proceed; and other reasonable activities.

15.03.02. Coordination with Others

A. Contractor shall notify Milpitas Police Department at (408) 586-2400 and Fire Department at (408) 586-2800 5 days and 48 hours, respectively, prior to beginning of work each construction season.

B. Comcast overhead communication line relocation at Hanson Court. Contractor shall coordinate with Leonardo Manrara at (408) 482-5073 or Benjamin Lopez (669) 216-0022.

C. VTA inspectors are required for construction of the VTA/BART headwall. Contractor personnel working on these items will also need background checks through www.iproveit.com. Contractor shall contact VTA permitting staff Mark Knollmueller (408-321-5891) and Paul Garrett (408-321-5776) 48 hours prior to starting work on these items. If there is no answer, contact the permitting staff's main line at (408) 321-5856.

D. Contractor shall complete a Site-Specific Work Plan (SSWP) for activities near BART tracks. Contractor shall coordinate with Gary Anderson at (510) 464-6676. A template for the SSWP can be found in Appendix C. The Contractor shall adhere to the following and include these in the SSWP:

1. Equipment with the potential to tip over and foul the track shall either point away from the tracks or be oriented parallel to the tracks.

2. Construction activities shall not be within 10 feet of BART's operating envelope.

15.04. Construction Survey

A. This Article establishes the minimum requirements for construction surveying. The Contractor shall hire a qualified independent surveying firm to conduct the construction surveys. All field/construction surveys shall be performed under the direction of a Licensed Land Surveyor, or Civil Engineer authorized to practice land surveying in California, per Article 5, Section 8773 of the California Business and Professions Code. The Contractor shall submit for review and approval the resume of qualifications of the independent surveying firm and the supervising Licensed Land Surveyor, or Civil Engineer.

B. The Contractor shall notify the District in writing a minimum of 5 working days before starting operations that require construction staking related work. The

District will establish survey control points and reference points as shown on the Drawings for required field layout.

C. The Contractor shall be solely responsible for the measurements and layout of the Project from the given line and grade stakes, slope stakes, and offset stakes. Any questions regarding interpretation of project layout shall be resolved by the Engineer.

D. The Contractor's independent surveying firm will provide all construction staking services including, but not limited to:

1. Establishment and maintain all Project construction survey field control points, baselines and reference points as required for construction layout survey. Survey control points shall not be set or checked using GPS equipment.

2. Contractor's Engineer shall verify locations of survey control points prior to starting any work on the Project site. Any discrepancies (horizontal and vertical) between the Contractor's surveyor's measurements and the Drawings shall be brought to the Engineer's attention immediately. The Engineer shall be allowed a minimum of 5 working days to determine a solution to mitigate or resolve the discrepancy.

3. Set reference points (RP's) with elevations to key alignment stations: Begin Project, Beginning of Curves (BC's), end of Curves (EC's), Point of Intersections (PI's), Equation Stations (Eq. Sta.), Grade Breaks, beginning and end points of vertical curves (VPC & VPT), and End Project.

4. Set intermediate stakes at fifty (50) foot intervals along tangents and twenty-five (25)-foot intervals along curves.

5. Set slope stakes to determine location of intersection of design grade and original ground at fifty (50) foot intervals along tangents and twenty-five (25) foot intervals along curves.

6. Slope stakes for slopes at 2:1 or steeper shall be provided. Slopes shall not be constructed relying solely on construction equipment mounted GPS.

7. Line and grade stake for facilities such as utilities, structures, ramps, walls, maintenances road and transitions. Structures shall not be staked using GPS equipment.

8. Right of way stakes for reference location shall be set at maximum 50' intervals for the length of the project. At locations where there are abrupt changes to the right of way lines, at abrupt angle changes to the right of way lines or at locations where the right of way no longer follows a straight or curve alignment, the Contractor's surveyor shall also be

required to install stakes at less than 50-foot interval locations at the direction and satisfaction of the Engineer, at the Contractor's expense.

E. At the Engineer's request, survey stakes, reference points, and benchmarks destroyed or removed by the Contractor shall be replaced by the Contractor at his/her expense.

F. The Contractor shall assure that the Contractor's surveyor surveys all points of connection to existing structures or underground utilities prior of beginning the installation of new structures or facilities to confirm the actual locations and grades. Significant deviations shall be reported in writing to the Engineer prior to proceeding with the installation of new facilities. The Engineer shall be allowed a minimum of 5 working days to determine a solution to mitigate or resolved any uncovered discrepancy.

G. Finish grade surface elevations not conforming to following tolerances shall be reported to the Engineer and corrected by the Contractor to the Engineer's satisfaction, at the Contractor's expense:

Surface	Tolerances (feet)
Channel bottom	+0.0 to 0.1
Subgrade for channel bottom protection	+0.0 to 0.2
Channel side slopes	+0.0 to 0.1
Concrete floodwalls	+0.0 to 0.05
Top of Levee	+0.0 to 0.05
Top of Levee Cross Section	+0.0 to 0.05

H. Measurement of Quantities for Excavation and Placement:

1. Measurement of quantities for payment under Article 24.01. Channel Excavation. Topsoil and Channel Embankment, pre-construction and post-construction surveys shall be conducted as follows: The Contractor's surveyor shall conduct the surveys and calculate the quantities for payment as stipulated in these Specifications. No adjustment will be made to the cross sections for quantity calculations to account for clearing and grubbing or stripping.

2. The measurements shall be performed as each construction work area is completed. The work shall include the number of survey move-ins necessary to accommodate the Contractor's operations and construction staging.

3. Pre-construction surveys shall be done and completed 5 working days prior to any excavation and embankment work. The Contractor may choose to work within specific reaches first. Prior to issuance of any payment for the excavation and embankment quantities, whether on

reach-by-reach basis or for the whole project, post-construction surveys shall be completed and provided by the Contractor to the District.

4. The pre-construction and post-construction surveys shall be done at 50-foot intervals for the entire excavation limit. The Contractor shall provide additional cross sections at the beginnings and ends of excavations, access ramps, and channel bank transitions at the locations shown in Drawings and as directed by the Engineer. The cross sections shall include grade breaks, tops and bottoms of banks from right of way to right of way. The locations and elevations of the centerline and water level of the creek, utilities and improvements are not required to be included in the surveys. The total excavation volume shall be computed in cubic yards by the average end area method utilizing all the pre-construction and post-construction cross sections, excluding the volume associated with topsoil salvaging per Article 24.01.01.06. Measurement, and structural excavation per Article 24.04.06. Measurement. The Contractor will be paid according to the actual channel excavation determined by this method. If the post construction survey is performed after installation of the new maintenance road and/or erosion control blankets, the Engineer will make adjustment to the survey data to account for these features.

5. The Contractor shall submit to the District all surveyed points for quantity surveys in ASCII format in hard copy and electronic format; plots of the cross sections in AutoCAD format in hard copy and electronic format; and a hard copy of the quantity calculations to the Engineer for review and approval. In the event that there are any discrepancies found during this review; the Contractor shall be responsible for reconciling said differences to the satisfaction of the Engineer prior to excavation and embankment work, at Contractor's expense and no additional cost to the District.

I. The Contractor shall not remove or disturb survey monuments and permanent markers unless the Contractor has recorded and referenced the locations of survey monuments and permanent markers that are anticipated to be disturbed or removed as approved by the Engineer. The Contractor shall be responsible for the restoration or replacement of survey monuments and permanent markers to the satisfaction of the Engineer, and for causing a Corner Record to be filed with the County of Santa Clara by a Licensed Land Surveyor, or Civil Engineer authorized to practice land surveying in California, per Article 5, Section 8773 of the California Business and Professions Code.

J. The relocation and protection of survey monuments shall be in accordance with Article 16.03.01. Survey Monuments, of these Specifications.

15.05. Public Notification

A. The Engineer is responsible for all written and oral communication with the public and with neighbors. The Contractor shall provide the Engineer with its planned start and finish dates for major construction operations three (3) weeks in

advance of their occurrence to allow the District time to notify neighbors. The Contractor shall include in the submittals major Milestones, descriptions of the Work activities, and the start and end date(s) of each activity.

B. The Progress Schedule Submittals shall include, but shall not be limited to, the following activities:

1. Creek dewatering
2. Traffic Control
3. Shoring installation
4. Concrete pouring
5. Clearing and grubbing
6. Pedestrian access closures
7. Material deliveries and haul-off
8. Demolition of existing structures, facilities, and improvements
9. Plant installation
10. Plant establishment activities
11. Utility relocation, utility shutdowns, etc.

C. The Engineer shall provide the above information two (2) weeks in advance as well as 24-hour notices to all property owners and tenants adjacent to the Project site and to others potentially impacted by the construction activities. If, for any reason, any construction activity is anticipated to be delayed for more than one (1) week than that shown in the above submittals, the Contractor shall notify the Engineer immediately; submit the revised planned start and finish dates; and explain the causes for the Delay. The Delay notice shall be given to the Engineer no later than one (1) week prior to performing the activity.

D. All payments for coordinating the Work and for providing submittals as specified shall be considered incidental and shall be included in the other items of Work; no additional payment shall be made.

THIS PAGE INTENTIONALLY LEFT BLANK

SECTION 16. WORK CONSTRAINTS AND SITE RESTRICTIONS

16.01. General Work Constraints

A. All work within the project limits, as shown in the Drawings, from property line to property line, downstream of North Milpitas Boulevard up to the VTA/BART tracks, shall only be implemented from June 15 to October 15 of each calendar year per regulatory permit conditions provided in Appendix C.

B. All work within the project limits, as shown in the Drawings, from property line to property line, upstream of North Milpitas Boulevard up to the drop structure, shall only be implemented from May 1 to October 15 of each calendar year per regulatory permit conditions provided in Appendix C.

16.02. Utilities

A. The Contractor's attention is directed to Standard Provisions Article 4.10. Preservation of Property, and Article 4.25. Coordination with Utilities.

B. Various existing utilities, both above and below ground, may be encountered during construction. The Contractor shall perform all Work in such a manner so as to avoid damage to existing utilities. The Contractor is responsible for any damage due to failure to exercise due care.

C. The Contractor shall notify underground service alert (U.S.A.) a minimum of five (5) working Days prior to the start of excavation or demolition in accordance with California Government Code requirements. The Contractor is responsible for coordinating the U.S.A. notification according to the Contractor's schedule; any delay due to utility markings through the U.S.A. process is the responsibility of the Contractor. All U.S.A. markings from the project shall be completely removed at the end of construction.

D. The Contractor shall not interrupt the service function or disturb the support of any utility without authority from the utility owner or an order from the Engineer. All valves, switches, vaults, and meters shall be maintained and readily accessible for emergency shutoff.

E. For trenching operations, the Contractor shall support all existing utilities within the trench excavation as required to avoid damage to the existing utilities. Any other nearby parallel or crossing pipelines or utilities uncovered during the trench operation shall be protected from damage during excavation by using hand tools to expose them. The Contractor shall comply with Cal-OSHA and OSHA requirements for trenching and shoring work.

16.02.01. Utility Coordination

A. The Contractor is responsible for coordination of Work near utilities and for the protection of the utility during construction.

B. The telephone numbers of owners of known utilities that may be encountered are:

Comcast (Francisco Manrara)	(408) 482-5073
Comcast hotline	(800) 934-6489
City of Milpitas	(408) 586-2600
PG&E Gas	(800) 743-5000
PG&E Electric (General)	(800) 743-5000
PG&E Electric (Ca Huynh)	(408) 299-1040
U.S.A.	(800) 227-2600
VTA (Permit Staff Main Line)	(408) 321-5856
BART (Gary Anderson)	(510) 464-6676
Chevron	(925) 753-2000 (925) 842-1000

C. It is the Contractor's responsibility to confirm and/or update all contact information.

D. The District and the owners of utilities or their authorized agents reserve the right to enter upon the right of way at all times for the purpose of operations and maintenance of their facilities or for making necessary connections or repairs to their properties. The Contractor shall cooperate with the District and with the affected utilities engaged in such Work to avoid any unnecessary Delay or hindrance to such Work.

E. Contractor shall be responsible for maintaining storm drain and sanitary sewer system flows without interruption.

F. The Contractor shall perform a video inspection of the City of Milpitas owned storm drain, water and sewer utilities that cross or end at Lower Calera Creek. Video inspections will be required prior to construction activities and after construction is completed.

16.02.02. Protection of Existing Utilities

A. The Contractor is responsible for doing all Work and furnishing all Materials required for protecting in place or restoring all existing above- and below-ground utilities disturbed or damaged during construction to a condition equal to or better than that existing prior to construction.

B. The Contractor shall protect all utilities that may be impacted by the Work shown in the Drawings, including, but not limited to:

1. Chevron gas line near VTA/BART railroad

2. PG&E gas line near Hanson Court

3. Portions of storm drain systems that will not be demolished

4. PG&E overhead electric transmission lines near North Milpitas Boulevard

5. Overhead communication line(s) that will not be relocated

6. All other underground utility lines shown in the Drawings that will not be relocated.

C. All exposed utilities shall be supported firmly and uniformly conforming to the utility requirements. No utilities shall be left exposed for a period exceeding eight (8) hours unless approved by the utility and by the Engineer. Unless otherwise shown on the Drawings, all utilities shall be backfilled with at least 12 inches of select imported backfill around the utility.

D. It is imperative that any proposed construction work not impair the safety of the PG&E overhead power lines and Chevron gas transmission lines on the site. This not only includes any immediate safety risk to the pipelines during construction, but also the long-term public safety with respect to this critical piece of infrastructure. PG&E and Chevron require adequate access at all times to patrol, survey, excavate, inspect, test, and otherwise maintain the facilities on a continuous basis in accordance with PG&E Utility Standard TD-4490S "Gas Pipeline Rights-of-Way Management" and the Code of Federal Regulations Title 49 Section 192 mandated by the United States Department of Transportation and adopted by the State of California Public Utilities Commission in General Order 112E. The following requirements shall be met by the Contractor through the course of Work:

1. Standby Inspection: A Gas Transmission Standby Inspector must be present during any demolition or construction activity within 10 feet of the gas pipeline(s). This includes all grading, trenching, gas line depth verifications (potholes), asphalt or concrete demolition/removal, removal of trees, signs, light poles, etc. This inspection can be coordinated through the Underground Service Alert (USA) service at 811 or 1-800-227-2600. A minimum notice of 48 hours is required.

E. All utility pole and guy anchors shall be protected, and, where the walls of a trench are within five (5) feet of a pole or anchor, lateral support to the pole shall be provided by the Contractor.

F. The Contractor shall immediately notify the utility owner and the Engineer if any existing utilities have sustained damage prior to excavation or if the Contractor disturbs or damages the existing utility during the excavation. The Contractor shall bear the cost of repair or replacement of any utility damaged as a result of construction operation.

G. In no case shall any service (e.g., gas, water, electricity, telephone, internet, etc.) be interrupted. If it is impractical to support the utility across trench excavations, the Contractor may remove the services, provided a temporary bypass has been installed and is operational prior to the removal, and is approved by the utility owner.

H. The Contractor shall arrange a field meeting with the City of Milpitas public works inspector prior to any excavation or removal of a City utility. The contact information of the public works inspector will be located in the encroachment permit.

I. Utility boxes owned by the City of Milpitas shall be adjusted to grade.

16.02.03. Utility Installation/Relocation by Others

A. The utility owner shall inspect any of their underground utilities, as necessary within the limits of the Work or within temporary construction easements. The Contractor shall coordinate its activities and shall fully cooperate with the utility owner so as not to hinder or interrupt the assigned task of said personnel.

B. Contractor's attention is directed to Article 16.02.04.01 for the existing Comcast overhead communication line near E-line Station 17+30. Once the Contractor installs the utility conduits as shown in the Drawings, Comcast will install the new communication cables and will also demolish the existing overhead communication cables. Contractor shall coordinate their activities with Comcast for the duration of the work, including schedule of work, and shall fully cooperate with the respective utilities so as not to hinder or interrupt the assigned task of said personnel. Contractor shall maintain 24 hour/7 days a week access for the duration of the project to allow Comcast to perform relocation on its existing utility lines. Contractor shall contact the Comcast point of contact listed in Article 16.02.01.B. to coordinate the relocation work activities, as specified in these Specifications and as shown on the Drawings.

16.02.04. Utility Relocations

16.02.04.01. E-Line Station 17+30± Comcast Cable Line Relocation

A. The Contractor is responsible for coordination and scheduling for the installation of the new below ground facility in order to relocate the existing overhead Comcast Communication line as shown in the Drawings. In general, the construction and coordination are expected to be the following:

1. Contractor shall, in coordination with Comcast, trench and install new casing beneath Milpitas Blvd as shown on the Drawings.

2. Contractor shall call Comcast representative listed in Article 16.02.01.B. to schedule inspection of conduit installation 5 days in advance of conduit installation. Contractor shall meet Comcast installation and inspection requirements.

3. Contractor shall call Comcast hotline to schedule delivery of two (2) utility pull boxes, provide the equipment to unload the utility pull boxes when utility pull boxes arrive at the site and in coordination with Comcast, install new utility pull boxes.

4. Contractor shall coordinate with Comcast for the installation and testing of new communication line in the new below ground facility.

5. Contractor shall be responsible for all backfill, compaction, testing, paving, and coordination for inspection by City of Milpitas for the trench backfill over the new Comcast facility.

6. Upon acceptance of new communication line installation by Comcast, Contractor shall coordinate, including communication and scheduling, with Comcast for removal of the existing overhead communication line between the limits of removal shown on the Drawings.

16.02.05. Pothole—Bid Item No. 2

16.02.05.01. Scope of Work

A. Pothole shall consist of all labor and materials necessary to pothole as shown on the Drawings, as specified herein, and as directed by the Engineer.

B. Contractor shall field mark, notify USA North, and pothole as necessary to determine the exact locations of pipes and storm drain tie-in locations shown on the Drawings and in critical locations, including City of Milpitas storm, sewer, and water pipelines, prior to construction. The Contractor shall perform a minimum of two potholes for each underground pipeline to obtain plan and profile of each pertinent pipe and provide this information to the Engineer prior to implementing construction within 100 feet of each pipe location.

C. The Contractor shall verify the exact location of all indicated or field marked utilities and shall make a sufficient number of exploratory excavations (a minimum of two potholes for each pipeline) of all utilities that may interfere with the Work in advance of the construction and submitted in accordance with Article 16.02.05.02 Submittals. The Contractor shall promptly notify the Engineer when such exploratory excavations show the utility location as shown on the Drawings to be in error. Unless otherwise specified in these Specifications, all expenses for performance of the exploratory excavations (including hand-digging, potholing, trenching, etc.) shall be paid for by the Contractor in accordance with Article 16.02.05.03 Payment.

16.02.05.02. Submittals

A. Potholes shall be performed by the Contractor for each utility shown in the Drawings and storm drain outfalls. After the pothole operation is completed, the Contractor shall submit a report within 10 working days of Work that may interfere with the utility to the District and to the City of Milpitas. The report shall include the following data:

1. Identification number consistent with this scope and marked in the field.

2. Mark-up Site Plan showing northing and easting locations for all potholes with label used in the field.

3. Date of pothole.

4. Utility type uncovered (water, electricity, sewer).

5. Utility size (outside diameter).

6. Material of utility (PVC, CIP, DIP, ACP, etc.).

7. Depth from surface to top of utility and actual elevation of the top of the utility.

8. Utility owner, if known.

B. Contractor shall prepare a separate report for potholes of City of Milpitas storm drain, water and sewer utilities.

16.02.05.03. Payment

A. Full compensation for furnishing all labor, materials, tools, equipment, coordination and incidentals and for doing all work involving potholing of existing utilities, and other exploratory excavations, as shown on the Drawings, as specified in these Specifications, and as directed by the Engineer, shall be included in the unit bid price per each for POTHOLE, Bid Item No. 2, if authorized by the District.

16.03. Protection of Existing Improvements

A. The Contractor's attention is directed to Standard Provisions Article 4.10. Preservation of Property.

B. Contractor shall protect as much of the existing sidewalk/planter combination at N. Milpitas Boulevard and Arizona Avenue access points as possible. Unless noted otherwise on the Drawings, any damaged sidewalk/planter combinations shall be restored in kind in accordance with City of Milpitas standard details by the Contractor.

16.03.01. Survey Monuments

A. No survey monuments, permanent markers for the District right of way, or District survey control points shall be removed or disturbed until the Engineer has recorded the locations thereof and a permit for such removal has been received from the agency having jurisdiction. When the construction Work has been completed, the Contractor shall replace the monuments accurately in the locations as referenced by the Engineer.

B. If any marker or monument is destroyed by the Contractor without prior written approval of the Engineer, the Contractor shall be responsible for the accurate

replacement of the marker or monument (i) by a land surveyor licensed by the State of California; (ii) in accordance with the California Business and Professions Code Chapter 15 Land Surveyors, Section 8771; and (iii) at no expense to the District.

16.04. Monitoring Surveys—Bid Item No. 3

16.04.01. Preconstruction Survey Within the Project Limits

A. After the Contract has been awarded and before commencement of the Work, the Contractor shall conduct a thorough examination of the Work areas within the Project limits only after notification and coordination with the Engineer.

B. The Contractor shall inspect the condition of all areas that may have potential impacts, including, but not limited to, existing improvements, levees, ramps, buildings, landscape planting, architectural finishes, the size of structural cracking or settlement, the rate of leakage, and any other conditions deemed appropriate. The presence of the Engineer shall in no way relieve the Contractor of the responsibility for completely and accurately documenting all existing conditions.

C. Records of all observations shall be prepared by the Contractor; every copy of all documents shall be signed by the authorized representative of the Contractor and provided to the Engineer. Photographs and videos with dates shall be made by the Contractor and included in the record of observations. One (1) signed copy of every document, photograph, and video will be kept on file in the office of the Engineer.

D. The above records, photographs, and videos are intended for use as evidence in ascertaining the extent of any damage that may occur as a result of the Contractor's operations during the prosecution of the Work.

E. Structural surveys, if required, shall be conducted by a licensed civil or structural engineer.

16.04.02. Surveys of Properties in the Vicinity of the Work

A. The Contractor is advised that there are residential or commercial properties in the immediate vicinity of the Work. The Contractor is responsible to protect those properties from damage. Any damage to the adjacent properties shall be addressed in accordance with Standard Provisions Article 4.10. Preservation of Property.

B. The Contractor shall perform structural surveys (one pre-construction survey and one post-construction survey) on all properties provided in Table 16.04-1 below to be surveyed. Structural surveys shall consist of all structural survey Work necessary to establish and document the existing structural condition of the properties adjacent to the construction Project before and after construction.

TABLE 16.04-1
Structural Surveys

Address
230 Berrendo Drive
64 Sudbury Drive
1125 N. Milpitas Blvd.

C. The District has obtained right of entries to perform the structural surveys of the properties listed in Table 16.04-1 above and will provide contact information for the building owners upon award of the contract.

D. The Contractor shall employ a licensed civil or structural engineer registered in the State of California to conduct the structural surveys and to prepare reports documenting the survey results. The Contractor shall submit to the Engineer a copy of the preconstruction survey reports prior to the commencement of field Work and a copy of the post-construction survey reports one (1) month prior to the issuance of the Project Completion letter by the Engineer.

E. Scope of Work:

1. Preconstruction Survey

a. Prior to the start of construction, the Contractor shall survey and document the existing condition of the structures and grounds of each of the residential or commercial properties as shown on the Drawings. The Contractor shall submit inspection reports to the Engineer with photographs, including videotaping with verbal description, of the existing condition for each property being inspected. All photographs submitted in the inspection reports shall be mounted on 8½ X 11-inch sheets. The Contractor shall coordinate and notify each property owner by phone or by mail at least 72 hours in advance of its visit to perform these surveys.

b. The Contractor shall perform a pre-construction video inspection of the City of Milpitas owned storm drain, water and sewer utilities that cross or end at Lower Calera Creek. The Contractor shall coordinate the video inspection with the City of Milpitas public works inspector contact listed on the encroachment permit.

c. Prior to the start of construction, the Contractor shall survey the existing northern U-frame channel wall along the Milpitas Materials Company property line. The survey shall include points along the face of the wall at the top and bottom of the wall at least every ten feet to be used as a basis for deflection monitoring throughout construction.

2. Post-Construction Survey

a. Post-construction Work shall consist of the survey Work necessary to document the condition of the existing structures and grounds of each of the residential or commercial properties included in the preconstruction survey after the construction has been completed. The Contractor shall submit inspection reports to the Engineer with photographs, including videotaping with verbal description, of the existing condition for each property being inspected. All photographs submitted in the inspection reports shall be mounted on 8 ½ X 11-inch sheets. The Contractor shall coordinate and notify each property owner by phone or by mail at least 72 hours in advance of its visit to perform these surveys.

b. The Contractor shall perform a post-construction video inspection of the City of Milpitas owned storm drain, water and sewer utilities that cross or end at Lower Calera Creek. The Contractor shall coordinate the video inspection with the City of Milpitas public works inspector contact listed on the encroachment permit.

16.04.03. Payment

A. Full compensation for furnishing all labor, materials, tools, equipment, coordination and incidentals and for doing all work involved in complying with all requirements under Article 16.04. Monitoring Surveys, as shown on the Drawings, as specified in these Specifications, and as directed by the Engineer, shall be included in the lump sum price bid for MONITORING SURVEYS, Bid Item No. 3, if authorized by the District.

B. If the Contractor elects to perform additional photographic surveys or video surveys of existing facilities other than those facilities listed in this Article 16.04. Monitoring Surveys, of these Specifications, without prior approval from the Engineer said work shall be at Contractor's own expense and at no additional costs to the District.

16.05. Rights of Way

A. Work will take place adjacent to public streets, adjacent to VTA/BART railroads, and rights of way in the City of Milpitas. In the performance of the work, the Contractor shall comply with the ordinances, regulations, and all other requirements of the authorities governing work in public streets and rights of way.

B. Prior to working in City of Milpitas right-of-way, the contractor shall obtain a City Encroachment Permit and provide copies of their Liability Insurance documents naming the City of Milpitas and its officers as additional insured. Contractor shall also provide a Faithful Performance Bond naming the City of Milpitas as a co-obligee or dual obligee for the full value of the Project. This includes providing any associated fees and conditions for approval, such as traffic control plans, hauling route information, and inspections.

C. Prior to working within the VTA/BART right-of-way or nearby (within 10 feet of the edge of the BART tracks), the contractor shall meet the VTA/BART permit conditions. Permit conditions include the development and approval by VTA/BART of a Site-Specific Work Plan (SSWP), submit and approval of the Certificate of Insurance and Protective Railroad Liability Insurance, and perform background security checks of field staff. If the work has a potential to foul the BART tracks, then BART will implement the following provisions:

1. Any activities that has the potential to foul the BART tracks will be restricted to non-revenue hours.

2. Non-revenue hours are as follows (please note, times are approximate and need BART's concurrence for actuals)

   a. Monday thru Friday – non-revenue starts at midnight and ends at 5 a.m.

   b. Friday night to Saturday morning – non-revenue starts at midnight and ends at 5:45 a.m.

   c. Saturday night to Sunday morning – non-revenue starts at midnight and ends at 8:00 a.m.

3. The contractor is encouraged to stage the work in such a fashion to prevent fouling the tracks. Examples would be as follows: 1) Position the crane so that all lifts, the boom is facing away from the BART tracks; 2) Install crane swing stops so that the boom will never face the BART tracks; 3) Install barriers so that any mobile equipment cannot accidently hit the BART operating fence and potentially foul the BART tracks.

4. BART may require a BART flagger on site where it is possible to foul the BART tracks. Contractor shall assume that a BART flagger will be required and will also be responsible for any flagger expense.

16.05.01. District-Furnished Right of Way

A. The District has provided all rights of way as shown on the Drawings. The Contractor has full use of this right of way except for the limitations specified in these Specifications and as noted on the Drawings.

B. Unless otherwise shown on the Drawings, all fences, sheds, plants, trees, shrubs, lawns, irrigation systems, retaining walls, curbs, gutters, sidewalks and pavements or any other appurtenances and facilities shall be protected. If damaged during construction, the Contractor shall repair or replace them in kind to the satisfaction of the Engineer at no cost to the District.

16.05.02. Contractor-Furnished Right of Way

A. Any additional rights of way desired by the Contractor for its convenience shall be acquired by the Contractor at no expense or obligation to the District. The Contractor shall provide the Engineer with copies of any agreements between the Contractor and property owners regarding disposal of excess Materials generated by the Contractor's activities, storage of Materials, or any use of property in conjunction with this Project. The agreement shall state that the agreement is solely between the Contractor and the property owner and that the District is not a party to the agreement and not responsible for compliance with any conditions stated in the agreement.

16.05.03. Temporary Construction Easements

A. The District has obtained temporary construction easement agreements with its respective property owners, listed in the following table, along the limits of work for use during construction of this Project. The Contractor shall be fully aware of the conditions stipulated in the agreements that may govern his/her operation in these temporary construction easements and shall conduct construction operation accordingly.

Owner	APN	Location/Description
One Hanson LLC	022-31-020	1 Hanson Court (North Milpitas Self-Storage)
City of Milpitas	022-31-000	Hanson Court (Driveway)

B. Copies of the TCE agreements are included in Appendix E for reference.

C. The Contractor shall comply with the conditions stipulated in the City of Milpitas Encroachment Permit for work in the City's right-of-way.

D. The Contractor shall comply with the City of Milpitas BMPs while working in City of Milpitas right-of-way. The BMPs can be found in Article 19.01.02.E.

E. Access to the temporary construction easement areas will only be permitted from the existing District rights of way or public streets. Entry to or egress from the temporary construction easement areas outside the existing District rights of way or public streets will not be allowed.

F. The Contractor shall notify the Engineer with an advance written notice at least 5 working days before any entry on the property. The Contractor shall include all TCEs as part of their preconstruction survey. Refer to Article 16.04.01. Preconstruction Survey Within the Project Limits, for surveys within project limits.

G. The temporary construction easement and shall continue in full force and effect until the completion of construction of the Project at which time the temporary construction easement shall terminate.

H. Should the actual use of the temporary construction easement extend beyond the prescribed period of time, the Contractor shall notify the Engineer in writing 20 working days prior to the expiration of the temporary construction easement. The Contractor shall bear all costs incurred by the District for extension of the temporary construction easement.

I. When use of the temporary construction easement is no longer required, the Contractor shall clean all debris and leave the property in a neat, clean, and presentable condition, and notify the owner that the work is complete.

J. Full compensation for conforming to the requirements of this Article and to the conditions stipulated in the temporary construction easement agreement between the District and the property owners shall be considered as included in the various contract in terms of work and no additional compensation will be allowed therefore.

16.06. Access to Properties Owned by Others

A. The Contractor shall conduct the construction operations in a manner that cause as little inconvenience as possible to adjacent property owners.

B. Convenient access to driveways, houses, buildings, and businesses along the Work shall be maintained in operational condition; temporary approaches to crossings or to intersecting streets shall be provided and kept in good condition.

C. When construction operation is directly within the driveway area, temporary access shall be provided. The existing access shall not be closed until the temporary replacement access is usable. Once construction is completed, access shall be restored to a condition equal to or better than the existing condition prior to the Contractor's operation.

D. The Contractor shall comply with California Vehicle Code Sections 22500 Prohibited Stopping Standing or Parking and 22500.1 Additional Prohibited Stopping Standing or Parking Fire Lane regarding stopping, parking, or leaving any vehicle in front of a public or private driveway.

16.07. Access to the Job Site

A. The Project location is shown on a map included in the Drawings. The Contractor may use the existing roads to access and perform the Work subject to the restrictions specified herein.

B. It is the Contractor's responsibility to obtain any and all permits that may be required from all applicable regulatory agencies to move Materials and Equipment to the job site, dispose of excess Material created by the Contractor's operation, and for traffic control to, from, and on the Project sites.

C. If, at any time, the Contractor wishes for his/her convenience to cross right of way not provided by the District to get to the construction site, the Contractor

shall obtain permission from the property owner in accordance with the provisions of Article 16.06. Access to Properties Owned by Others.

D. The project location and access points (AP) are shown on the Drawings. Access points for construction, other than the access points shown on the Drawings, must be approved by the Engineer.

E. The Contractor's attention is directed to the access point to the Project site off Arizona Avenue. Due to heavy pedestrian use of the sidewalk and roadways during student drop off and pick up times from Milpitas High School, additional traffic control may be required. The bell schedule for Milpitas High School can be found at the following link: https://mhs.musd.org/about-mhs/bell-schedule.

F. Construction traffic is not permitted on Jacklin Court per City of Milpitas.

16.08. Access Roads Within the Job Site

A. The Contractor shall maintain access roads to all staging, office trailer, storage areas, and to other areas to which frequent access is required. The Contractor shall maintain access to all other existing facilities on the site, including access for delivery of Materials and for maintenance and operation.

B. The Contractor is responsible for damages to buried utilities resulting from loads imposed on temporary roads constructed by the Contractor or other access routes used by the Contractor.

C. The Contractor shall maintain on-site access roads free of mud. Under no circumstance shall vehicles leaving the site track mud or dirt off the site onto public rights of way.

D. Contractor shall not use maintenance access roads for construction storage.

16.09. District Use of Facilities/Premises Within the Work Area

A. The District reserves the right to access and use the following premises during performance of the Work to conduct operations and maintenance of District facilities.

B. The Contractor shall coordinate all construction operations with the District to avoid conflict and to facilitate the District's use of the premises.

C. Unless otherwise altered by the Work, the Contractor shall restore the premises to preexisting condition, and shall immediately repair any damages to the premises caused by the Contractor's operations.

D. The Contractor shall maintain adequate channel cross section at all times to pass system discharges and possible rain events.

16.10. Headwall Footing Excavation Constraints Near VTA/BART

A. Structural excavation for the new headwall shall not extend further than 10 feet horizontally from the edge of the VTA/BART railroad tracks.

B. The Contractor shall develop a Site-Specific Work Plan for the headwall construction operations and submit to BART for their review and approval. The Contractor's attention is directed to Article 16.05. Rights of Way, for additional permit conditions for work near the VTA/BART tracks.

16.11. Work Period Restrictions

A. For any portions of work that are subject to work period restrictions under the Lake and Streambed Alteration Agreement (CDFW), Contractor shall completely prepare the site for winterization by October 15th. Winterization activities include, but are not limited to, hydroseeding and installation of erosion control fabric (both temporary, if necessary, and permanent), installing silt fence and straw waddles, and demobilization of equipment from the work area.

B. All winterization of graded/disturbed areas (both temporary and permanent) within the restricted portions of work shall be in place and completed by the Contractor before or on October 15.

C. Any fines incurred for not meeting the work period restrictions will be borne by the Contractor.

D. The Contractor's attention is directed to Article 16.01. General Work Constraints, for portions of work that are subject to work period restrictions.

SECTION 17. SAFETY AND SECURITY

17.01. Safety

A. Contractor's attention is directed to Standard Provisions Section 8 for Safety and Security Management where applicable.

B. When working on District or City of Milpitas property, the Contractor shall erect 6-foot high temporary chain link fences with green screen and install warning signs around any trenches being worked on. Contractor shall not leave any trenches open outside the working hours indicated in these Specifications; Contractor shall fully cover and secure the trenches in a manner that public access to the trenches is prevented.

C. For work within public streets, the length of trench remaining unbackfilled shall not exceed 100 feet. For work outside of public streets, the length of unbackfilled trench shall not exceed twice the actual daily production rate of completely installed and backfilled pipe, unless approved in writing by the Engineer. For the first 3 days of pipe laying operation, the actual daily production rate shall be assumed to be 100 feet of completely installed and backfilled pipe. The actual daily production rate for succeeding days shall be determined by the daily average of pipe completely installed and backfilled during the 3 preceding working days as determined by the Engineer. The Contractor shall conform to these Specifications and the State Specifications for backfill, or placement of a steel plate all open trenches within the roadways at the end of each working day. In the event that a main or trunk line utility facility is encountered which interferes with the work, the Contractor shall immediately notify the District in writing. If the Engineer determines that the main or trunk line utility facility was not shown on the Drawings or indicated in the Specifications within reasonable accuracy, the District will either have the appropriate utility company or public agency relocate the facility, or the District will direct the Contractor to relocate the facility in accordance with Article 3.06. Changes in the Work.

D. For the duration of construction, Contractor shall at Contractor's own cost clean up trash thrown into the project area and repair any vandalized and damaged temporary or permanent fence within 24 hours.

E. Homeless Encampments

1. If the Contractor determines that homeless encampments are present at the project site, the District will coordinate with the City of Milpitas and local law enforcement on the vacation of the homeless encampments, as well as the illegal inhabitants therein. The site will not be released to the Contractor until vacation of the homeless encampments is accomplished. Once the site is released to the Contractor, the Contractor shall be responsible for securing the site and preventing homeless encampments from developing throughout the duration of the construction operations. The Contractor's efforts and time involved in securing the site to prevent homeless encampments from developing shall not be a cause for

extension of the construction schedule or a basis for increasing the cost of the project for this item.

17.01.01. Temporary Facilities

A. Fences: Contractor shall develop their own plan and install temporary construction fencing consisting of 6-feet tall chain link fence with green privacy screen around any construction areas where the public may be affected and to protect the Work against acts of theft, violence, trespassing, and vandalism. When the entire site or part thereof is to be permanently fenced, permanent fencing may be built to serve as both permanent and temporary protection of the Work site, provided that any damaged or defaced fencing is replaced prior to final acceptance. All payments for temporary construction fencing shall be considered incidental and shall be included in other items of Work; no additional payments shall be made.

17.02. Safety and Health Program

A. No Special Requirements. Refer to Standard Provisions Article 8.10. Safety and Health Program for Hazardous Waste Operations.

17.03. Security Requirements at Job Site

17.03.01. General

A. No Special Requirements. Refer to Standard Provisions Article 8.15. Security Requirements at the Job Site.

17.03.02. Identification and Badging

A. Not Required for this Project.

17.03.03. Background Checks

A. The contractor’s attention is directed to Standard Provisions Article 8.18. Background Checks.

B. Background checks shall be required as part of the permitted work near the VTA/BART railroad tracks.

17.03.04. Site Access Control

A. Not Required for this Project.

17.03.05. Mail and Postal Deliveries to the Project Site

A. Mail and postal delivery restrictions are not applicable to this Project.

17.04. Payment

A. Full compensation for furnishing all labor, materials, tools, equipment and incidentals, background checks, for maintaining site safety and security and for doing all work involving installation, maintenance, and removal of temporary chain link fence with green privacy screen, as shown on the Drawings, as specified in these Specifications, and as directed by the Engineer, shall be included in the lump sum price bid for MOBILIZATION AND DEMOBILIZATION, Bid Item No. 7, if authorized by the District.

THIS PAGE INTENTIONALLY LEFT BLANK

SECTION 18. PERMITS AND REGULATIONS

18.01. Permits and Agreements

18.01.01. District-Obtained Permits

A. The District has obtained permits for work on this Project from the following agencies having jurisdiction:

1. NPDES General Construction Permit (see Standard Provisions Section 10 Environmental).

2. U.S. Army Corps of Engineers CWA Section 404 Permit 28440S.

3. Conditional Water Quality Certification, CIWQS Place No. 768945 (MB), and CIWQS Regulatory Measure No. 397588 from the Regional Water Quality Control Board.

4. Amended 1602 Lake or Streambed Alteration Agreement 1600-2013-0159-R3 from the California Department of Fish and Wildlife.

   a. Contractor shall keep a copy of this Lake or Streambed Alteration Agreement readily available at the project site at all times per Administration Measure 1.1 of the Amended Lake and Streambed Alteration Agreement.

5. Construction Access Permit (CAP) from the Santa Clara Valley Transportation Authority/Bay Area Rapid Transit

   a. Contractor will need to provide their Certificate of Insurance and Railroad Protective Liability information and a Site-Specific Work Plan for work near the VTA/BART railroad tracks as a condition of this permit. See Article 16.05. Rights of Way, for other permit conditions.

B. Copies of the permits are attached to these Specifications as Appendix C and made a part hereto.

C. The Contractor shall refer to other Articles in the Specifications for requirements to comply with the above permits.

D. It is the Contractor's responsibility to become familiar with the requirements and conditions of these permits and regulations. Contractor and his subcontractors shall comply with all requirements and conditions of the above regulations and permits, including water quality testing. The cost of any fines, penalties, or reparations for failure of Contractor to comply with the requirements and conditions of said regulations and permits shall be the responsibility of the Contractor, no such costs will be to the District and Contractor shall indemnify

District and its Consultants from any legal actions against Contractor due to non-compliance.

18.01.02. Contractor-Obtained Permits

A. In addition to the permits listed in the Standard Provisions, the Contractor shall obtain all permits listed below:

1. City of Milpitas Encroachment Permit

2. Haul Route Permit from City of Milpitas

3. Well Destruction Permit(s) from the District's Wells and Water Measurement Unit. Refer to Article 23.03.03. Well Abandon and Removal.

B. Contractor shall be responsible for obtaining and paying all fees and incidentals required for an encroachment permit and haul route permit from the City of Milpitas.

C. Contractor shall submit a copy of each contractor-obtained permit to the Engineer.

D. Contractor shall coordinate public works inspections for work within City of Milpitas right of way or City owned facilities. The City's public works inspector shall be notified a minimum of 48 hours prior to any work within the City's right of way or City owned facilities. Contact information for the public works inspector will be provided in the encroachment permit. Inspection hours are from 7 a.m. to 4 p.m. weekdays.

E. Contractor shall notify Milpitas Police and Fire Departments 5 days and 48 hours, respectively, prior to beginning of work each construction season.

18.01.03. Operation Regulations

A. Contractor shall be required to comply with all permit conditions, whether obtained by the District or the Contractor.

B. Contractor shall be required to provide a biological survey prior to the initiation of the following activities:

1. Vegetation removal including cutting or pruning of any trees or other vegetation on site; and

2. Installing control of water facilities.

C. Cutting or pruning of any trees on site shall be performed by an ISA-certified arborist currently licensed in the State of California. The Contractor shall be responsible for complying with all relevant conditions of said permits.

18.02. Hours of Work

A. Unless noted otherwise, no Work, including Material hauling to/from the site and Equipment movement, shall be performed during the Days and hours restricted by and set forth in this Article.

B. No Work shall take place between 7:00 p.m. and 7:00 a.m. on weekdays and City of Milpitas holidays (New Year's Day, Martin Luther King's Birthday, Lincoln's birthday, President's Day, Memorial Day, Independence Day, Labor Day, Veteran's Day, Thanksgiving Day, Friday after Thanksgiving Day, Christmas Eve, and Christmas Day). The Contractor's attention is directed to Section 27 for Traffic and Parking Requirements for additional restrictions.

C. Unless approved in writing by the Engineer, no Work shall be performed on Saturdays or Sundays or on any holiday listed herein. Requests for weekend or holiday work shall be made at least four weeks in advance.

D. Observed District holidays include New Year's Day, Martin Luther King's Birthday, President's Day, Cesar Chavez Day, Memorial Day, Independence Day, Labor Day, Indigenous People's Day, Veteran's Day, Thanksgiving Day, Friday after Thanksgiving, and Christmas Day. If any of the above holidays should fall on a Sunday, the following Monday shall also be considered a holiday. If a holiday should fall on a Saturday, the previous Friday shall also be considered a holiday.

E. For additional restrictions to Work refer to Article 16.01. General Work Constraints.

18.03. Noise Pollution and Vibration Monitoring – Bid Item No. 4

18.03.01. Noise

A. All construction activities and construction related operations, including delivery of construction materials, supplies, or improvements on or to a construction site, shall be restricted to the hours between 7 a.m. and 7 p.m. on weekdays. No construction work shall be performed on City of Milpitas holidays.

1. Contractor shall keep construction activities under surveillance and control to minimize environmental damage by noise and comply with the provisions of the State of California rules. Ensure that construction machinery is properly equipped with mufflers. The Contractor shall limit haul truck or other vehicle's speed on roads adjacent to residences and on unpaved roadways, limit construction hours in conformance with City of Milpitas noise ordinances and notifying the Engineer about type and schedule of construction.

B. Noise Control Plan: The Contractor shall develop and implement a noise control plan that describes the procedure for predicting construction noise levels prior to performing construction activities and the noise-reduction measures to meet City

of Milpitas noise limitations. The plan shall be prepared by an acoustical engineer and shall include the following components:

1. A description of the City of Milpitas noise abatement ordinance and the anticipated construction activities

2. Noise-reduction measures shall include these District BMPs

    a. Ensure equipment and trucks utilize the best available noise control techniques which would include, but not be limited to, improved mufflers, equipment redesign, intake silencers, ducts, engine enclosures, and acoustically attenuating shields or shrouds;

    b. Ensure that impact tools (e.g. jack hammers, pavement breakers, and rock drills) used for construction be hydraulically or electrically powered wherever possible to avoid noise associated with compressed air exhaust from pneumatically powered tools. Where use of pneumatic tools unavoidable, an exhaust muffler on the compressed air exhaust shall be used. External jackets on the tools themselves shall be used where feasible. Quieter procedures shall be used, such as drills rather than impact equipment, whenever feasible.

    c. Stationary noise sources due to construction equipment shall be located as far from adjacent receptors as possible, and that they be muffled and enclosed within temporary sheds. Insulation barriers and other measures shall be incorporated to the extent feasible.

3. An inventory of Construction Equipment and associated noise levels, including:

    a. Equipment manufacturer and model
    b. Horsepower rating of the Equipment
    c. Equipment noise-emission limit
    d. Estimated noise level at 25 feet
    e. Estimated date of first use on-site
    f. Estimated date of last use on-site
    g. Expected use (i.e., daytime or evening)

4. Noise-level calculations: Perform calculations to predict construction noise at property lines during daytime and evening periods. If greater than the limits specified, noise-reduction measures will need to be included.

5. A sketch of the construction site indicating the following:

    a. Contract name, Contractor's name, date, scale, legend and symbols, North arrow

6. Construction Equipment locations

7. All noise receptor locations near the construction site

    a. Locations and types of noise-reduction measures that may be required to demonstrate compliance with the noise limits specified in the Specifications

8. A description of noise-reduction measures, including the Materials, Equipment, and methods

9. Calculations for noise barrier performance design predictions and recalculations of noise levels at property lines

10. Any Drawings, sketches, Materials data, and suitable calculations

18.03.02. Noise Monitoring

A. Monitoring shall be performed by the Contractor using a type 1 sound-level meter, as specified by the latest ANSI standards, measuring a dynamic range of 40-120 dBA. Noise levels shall be A-weighted with a minimum sampling rate of 64 samples per second (fast). Root mean square (RMS) sound pressure levels (SPLs) shall be expressed by the descriptors L (max) and L_{eq} (h). Microphones shall be equipped with windscreens and shall be positioned as designated by the Engineer. Monitoring shall be performed for a duration of at least 60 minutes during each Work operation. Additional spot readings shall be taken as directed by the Engineer to assure noise levels during Work operations are within the allowable limits. Noise monitoring Equipment shall be calibrated before each Work shift. The noise monitor shall print data to a serial printer to provide immediate on-site results. The Contractor shall keep a copy of all documentation and submit one (1) copy to the Engineer on a daily basis.

18.03.03. Vibration Monitoring

A. This Work shall consist of vibration monitoring as a means of protecting the properties listed in Table 18.03-1 from excess vibration during certain construction activities.

B. The Contractor’s compliance with this Section does not relieve the Contractor of full responsibility for damage caused by the Contractor’s operations.

TABLE 18.03-1
Building/Feature Movement, Crack, and
Vibration Monitoring Minimum Monitoring Locations

Address	No. of Locations	APN
Adjacent to maintenance access ramp Sta 14+00 FW-21 Line on Valley Water easement	1	022-31-020
Adjacent to sales building at Milpitas Materials Company	1	022-02-014
E-Line Sta 19+50 North Side of Creek of Valley Water right of way	1	028-18-001
E-Line Sta 33+50 North Side of Creek of Valley Water right of way	1	028-18-001

C. With the exception of the Milpitas Materials Company location, vibration monitoring and recording shall be performed within 200 feet of the indicated locations during the course of all significant impact Work as determined by the Engineer. At a minimum, all structural removal, shoring installation, demolition, earthwork, pile driving, and pile-driving-related activities shall be considered as significant impact Work and shall be monitored as provided herein.

D. For placement of the vibration monitoring device at the Milpitas Materials Company location, the Contractor shall coordinate with the property owner, Mr. Val Fisher at (408) 262-0656, for the location of the vibration monitoring device. Prior to placement of the vibration monitoring device, the Contractor shall provide at least 48-hour notice to the property owner that the vibration monitoring device will be placed in the agreed upon location. Prior to removal of the vibration monitoring device, the Contractor shall provide at least 48-hour notice to the property owner. The District has obtained a permission to enter to perform the vibration monitoring and has provided a copy in Appendix E, Temporary Construction Easement.

E. The first vibration monitoring prior to the start of construction activity shall establish the baseline for all subsequent recordings. The baseline recordings shall consist of uninterrupted recordings for a period of not less than 24 hours at the above listed locations. The Contractor shall have the Equipment in place and functioning properly within 200 feet of the affected property prior to any significant impact Work. No significant impact Work activity occurring within this zone shall occur unless monitoring Equipment is functioning properly. The Equipment shall be set up in a manner such that an immediate warning is given when resultant peak particle velocity equal to or exceeding 0.2 inches per second is produced.

F. Monitoring Equipment shall be stationed within three (3) feet of the exterior of designated buildings on the side facing the Contractor's Work site. For buildings with frontage exceeding 200 feet, at least two (2) monitors shall be utilized at that location.

G. Prior to performing any vibration monitoring, including the baseline vibration monitoring and during significant impact Work, the Contractor shall submit to the Engineer a written plan detailing the procedures for vibration monitoring. Such details shall include:

1. The name of the firm providing the vibration monitoring services;

2. Description of the instrumentation and Equipment to be used;

3. Methods for mounting the instrumentation to the ground;

4. Data collection analysis procedure;

5. Number of vibration monitors to be utilized at each facility specified herein;

6. Means and methods of providing a warning when particle velocity equals or exceeds specified limits;

7. Name of the responsible person designated by the Contractor;

8. A contingency plan for alternative construction methods when particle velocity equals or exceeds specified limits.

H. Once the vibration monitoring plan has been favorably reviewed by the Engineer, the vibration monitoring Equipment shall be furnished and installed by the Contractor at the facilities designated herein when significant Work occurs within 200 feet of the indicated facilities. The 200 feet shall be measured from the source of the vibration, such as the column nearest to the actual demolition Work, the location of the Equipment, the pile location, or from the point of probable impact of any fallen structural elements, Materials, Equipment, bridge elements, shoring, or debris.

I. The vibration monitoring Equipment shall be capable of continuous operation with instant monitoring results and shall conform to the following requirements:

1. The velocity sensing transducers shall be capable of measuring velocities on the three (3) perpendicular axes (i.e., V_x, V_y, and V_z) simultaneously.

2. Frequency response of the velocity transducers and data acquisition Equipment shall cover the range from less than 5 Hz to more than 100 Hz. Sensitivity of the velocity transducers shall range below 0.001 inch per second to more than 2.000 inches per second.

3. Velocity transducers shall be field calibrated prior to use.

4. The data acquisition Equipment shall be capable of simultaneously recording individual velocity transducers in digital format, time-domain data (i.e., time vs. particle velocity) for each transducer.

J. The vibration shall be monitored continuously by the responsible person designated by the Contractor while significant impact Work is in progress. The vibration monitoring Equipment at each location shall operate continuously.

K. The vibration monitoring data shall be recorded contemporaneously and plotted continuously in ink on a graph by the data acquisition Equipment. The graph shall conform to the following:

1. Each graph shall show time-domain wave traces (particle velocity vs. time) for each transducer.

2. The graph shall have the same vertical and horizontal axis scale.

3. The resultant particle velocity shall be plotted on the graph instantaneously.

L. The Equipment shall be set up in a manner such that an immediate warning is given when the resultant peak particle velocity is equal to or greater than 2 inches per second. The peak particle velocity shall be derived from the component particle velocity Vx, Vy, and Vz and shall be equal to the square root of the sum of $Vx^2+Vy^2+Vz^2$.

M. The warning emitted by the vibration monitoring Equipment shall be instantaneously transmitted to the responsible person designated by the Contractor by means of warning lights, audible sounds, or electronic transmission. The responsible person shall have the authority to stop the Work causing the vibration.

N. When the peak particle velocity reading on monitoring Equipment equals or exceeds 0.2 inches per second, Work shall immediately cease and the Contractor shall implement the approved contingency plan to reduce and maintain the monitoring Equipment reading below 0.2 inches per second before resuming Work. The Contractor shall immediately notify the Engineer each time the vibration equals or exceeds 0.2 inches per second.

O. After the completion of the baseline vibration monitoring and vibration monitoring during significant impact Work at each of the facilities designated herein, the Contractor shall submit to the Engineer a daily report documenting the results of the vibration monitoring; each building or facility shall have a separate report. The reports shall be signed by an engineer who is registered as a civil engineer in the State of California and who is experienced and has expertise in the field of vibration monitoring. The report shall include the following:

1. Project identification, location, and Project name as shown on the Project plans

2. Location of monitoring Equipment, including address of monitored building or facility

3. Location of vibration source (i.e., pile-driving Equipment)

P. The District will retain an amount equal to 25 percent of the estimated value of the Work performed during the estimate period in which the Contractor fails to submit the vibration monitoring reports conforming to the requirements of this Section, as determined by the Engineer.

Q. The Contractor's vibration-monitoring personnel, which include those persons, firms, or entities providing vibration monitoring, recording, documentation, and the production of the reports, shall have the qualifications specified herein. These personnel may be on the staff of the Contractor. However, they shall not be employed nor compensated by Subcontractors or by persons or entities hired by Subcontractors who provide other services or Material for the Project. The Contractor's vibration-monitoring personnel shall be subject to the review of the Engineer.

R. The Contractor's vibration-monitoring personnel shall include a qualified vibration instrumentation engineer who is a registered professional engineer in the State of California and who has at least four (4) years of experience in installing and using vibration-monitoring instrumentation and in interpreting instrumentation data. The vibration instrumentation engineer shall:

1. be on-site and supervise the initial installation of each vibration-monitoring instrument;

2. supervise interpretations of vibration-monitoring data; and

3. review the Contractor's vibration and monitoring personnel

S. The Contractor shall obtain written permission from each property owner prior to entering the property for the purpose of performing the Work specified in this Section. The Contractor shall provide to the Engineer a copy of all such permissions or refusals by property owners.

18.03.04. Payment

A. Full compensation for furnishing all labor, Materials, tools, Equipment, and incidentals and for doing all Work involving vibration monitoring as specified in these Specifications and as directed by the Engineer shall be included in the unit price bid per each location for NOISE POLLUTION AND VIBRATION MONITORING, for Bid Item No. 4, if authorized by the District.

18.04. Air Pollution

A. No burning will be allowed on this Project.

B. All construction equipment shall be maintained and properly tuned in accordance with manufacturer's specifications. All equipment shall be checked and determined to be in running in proper condition prior to operations.

C. All construction equipment shall be maintained and properly tuned in accordance with manufacturer's specifications. All equipment shall be checked and determined to be in running in proper condition prior to operations.

D. All construction equipment, diesel trucks, and generators shall be equipped with Best Available Control Technology for emissions reductions of nitrogen oxides (NOx) and particulate matter (PM).

E. The contractor shall develop an emissions reduction plan that demonstrates the off-road equipment of more than 50 horsepower to be used during construction shall achieve a program-wide fleet average 20% NO_x reduction., and 45% PM reduction compared to the most recent CARB fleet average. Acceptable options for reducing emissions include late model engines, low-emissions diesel products, alternative fuels, engine retrofit technology, after-treatment products, add-on devices, such as particulate filters, and/or options as such become available.

18.05. Spillage and Dust

A. Specified dust controls shall be implemented such that visible dust plumes are retained within the property lines. Dust controls include watering and other measures, such as preventing trackout, paving unpaved roads, covering or treating stockpiles, etc., with the extent of controls varying with the size of the Project.

B. The Contractor shall perform regular street sweeping of local streets to remove cumulated dust and spillages resulting from Contractor's operations.

C. Winds breaks (e.g., tress, fences) shall be installed on the windward side(s) of actively disturbed areas of construction. Winds breaks should have a maximum of 50 percent air porosity.

D. Methods used to prevent mud from being tracked out of work sites onto roadways shall be implemented include installing a layer of geotextile mat, followed by a 4-inch thick layer of 1 to 3-inch diameter gravel on unsurfaced access roads.

18.05.01. Spillage and Dust Nuisance

A. Contractor shall immediately remedy any spillage and dust nuisance or deficiency arising from, or in consequence of Contractor's failure to perform the work specified under this Article.

B. Vegetation in disturbed areas shall be replanted as soon as horticulturally appropriate. For example, plant material may not be ready as soon as the job is done (e.g., willow cuttings have to be collected during winter dormancy). If planting of the required vegetation is not horticulturally feasible, an acceptable temporary measure shall be installed.

C. Upon the Contractor's failure to make timely remedies determined by the Engineer to be necessary and in the best interests of the public, the Engineer may employ private or public work forces and equipment to perform the work. The actual cost of employing such forces and equipment shall be doubled and then subtracted from the monies due, or that may become due, the Contractor. Such action(s) taken by the Engineer shall not preclude the District from taking other actions as deemed appropriate, and shall not relieve the Contractor of responsibility to comply with these Specifications.

D. Contractor shall post a publicly visible sign with the telephone number of a contact at SCVWD for dust complaints. The sign shall also include the contact number of the Bay Area Air Quality Management District.

18.06. Traffic Control

A. Fences, barriers, lights, flagging, guards, and signs will be installed as determined appropriate by the public agency having jurisdiction, to give adequate warning to the public of the construction and of any dangerous condition to be encountered as a result thereof. The Contractor shall prepare a traffic control plan to be signed and stamped by a professional civil engineer registered in the State of California.

B. The Contractor's attention is directed to the access point to the Project site off Arizona Avenue. Due to heavy pedestrian use of the sidewalk and roadways during student drop off and pick up times from Milpitas High School, additional traffic control may be required. The bell schedule for Milpitas High School can be found at the following link: https://mhs.musd.org/about-mhs/bell-schedule.

C. The traffic control plan shall address all items of work shown on the Drawings that will require traffic control measures. Additional traffic control changes, modifications, or additions by the governing agencies shall be provided without additional cost to the District.

D. Traffic control Work shall include, but shall not be limited to, removing and replacing traffic control systems; fencing, railing, barricades, and crash cushions; channelizers; AC pavement; driveways, curbs, gutters, and sidewalk and pavement markings; construction area signs necessary for traffic staging on public streets adjacent to or

near the Project area; and any other miscellaneous Work necessary to complete the traffic control as specified in these Specifications and as directed by the Engineer.

E. If any component in the traffic control system is displaced or ceases to operate or function as specified during the progress of the Work, the Contractor shall immediately repair the component to its original condition or replace the component and shall restore the component to its original location.

F. No stockpiling of Materials or parking of Equipment will be allowed on streets and sidewalks.

G. All construction signs shall be placed in the field, shall be visible to drivers, and shall not be covered or blocked by trees or by other fixed objects.

H. The Contractor shall verify any sprinkler system conflicts before installing construction area signs in planting strips. The Contractor shall replace landscaping upon removal of construction area signs, if needed, and as directed by the Engineer.

I. The Contractor shall ensure levels of operation acceptable to the Engineer, as well as perform inspections of traffic control zones on a daily basis.

J. The Contractor shall conduct his/her operations and schedule cleanups to cause the least possible obstruction and inconvenience to traffic, pedestrians, cyclists, and adjacent property owners. All streets and sidewalk areas shall be swept clean in accordance with these Specifications.

K. The Contractor shall cooperate with the City of Milpitas and any other local authority having jurisdiction relative to handling traffic around the construction area. The Contractor shall make his/her own arrangements relative to keeping the working area clear of parked vehicles to maintain sight visibility and access to adjacent properties. Existing road signs shall not be blocked at any time.

L. Damage done by the Contractor during the course of his/her work to adjacent city, county, or private property shall be repaired or replaced in kind and as directed by the Engineer.

M. Personal vehicles of the Contractor's employees, and the Contractor's equipment and vehicles shall not be parked on the traveled way, shoulders, medians, or lanes which have not been approved for closure, at any time. When entering or leaving roadways carrying public traffic, the Contractor's equipment, whether empty or loaded, shall in all cases yield to public traffic and shall travel in the direction of the traffic. Flaggers and traffic signs may be required to control this activity. No driveways or private roads shall be blocked. Safe access shall be maintained for pedestrian traffic throughout the work areas at all times.

N. Those parts of public streets, rights of way, and sidewalks that are occupied by the Contractor shall be immediately vacated by him/her and returned to public use when his/her use thereof is no longer necessary for the construction work.

O. During delivery and export of construction materials and equipment, the Contractor shall provide traffic flaggers and signs along the access route as directed by the Engineer.

18.07.01. Truck Traffic and Hauling

A. The Contractor shall obtain, at Contractor's expense, a "Haul Route Permit" from the City of Milpitas for transporting to and from the project site construction materials and disposal of surplus materials over the City of Milpitas streets. The Contractor shall submit a copy of the approved haul route plan to the Engineer.

B. Truck traffic and haul routes shall be in compliance with local permits and ordinances and as further specified herein. The Contractor shall comply with all City, County, and State rules, ordinances, regulations, and codes regarding truck routes prior to utilizing city streets for truck traffic and delivery. Contractor shall refer to the City of Milpitas website for approved Truck Route Map: http://www.ci.milpitas.ca.gov/residents/transportation.

C. The Contractor shall not perform any loading or unloading activities or any other related operations outside the project limits, or outside the hours of work as defined in these Specifications, including Article 18.02. Hours of Work, of these Specifications.

D. Hauling hours are strictly limited to the provisions listed in the City of Milpitas hauling permit.

E. All hauling and delivery truck schedules shall be submitted to the Engineer for review within 72 hours prior to occurrence.

F. The Contractor shall post information signs for truck drivers at approved locations indicating truck traffic hour restrictions. Sign shall be readily visible. Violators shall be warned or barred from the site.

G. If excessive dust is generated by truck traffic at project site, Engineer will require Contractor to limit truck speed limit to 5 mph.

18.07.02. Truck Arriving Early, Truck Idling, and Queuing

A. The District actively seeks to avoid or minimize unnecessary disturbance of the neighborhood from construction activities. Accordingly, all deliveries shall be coordinated to ensure that no delivery vehicles arrive at the site before 8 a.m. during weekdays, and no deliveries during weekends unless otherwise approved in writing by the Engineer, to prevent disruption of the neighborhood.

B. No idling or queuing shall take place on any residential street in the surrounding neighborhood except for reasons noted below:

1. Idling when the vehicle shall remain motionless due to an official traffic control device, traffic control signal, or at the direction of a peace officer or traffic conditions over which the driver has no control.

2. Idling when being forced to remain motionless due to adverse weather conditions or due to mechanical difficulties over which the driver has no control.

3. Idling to verify that the vehicle is in safe operating condition as required by Law.

4. Idling at the site entrance for security checks or for searches by District guards.

5. Idling as allowed by local, State, and Federal laws.

C. The Contractor shall control truck traffic such that, at any given time, only 2 trucks shall be permitted on residential streets, unless otherwise approved in writing by the Engineer.

D. The Contractor's attention is directed to the Special Provisions Article 12.05. Liquidated Damages, assessment for violating the arrival time or idling/queuing requirements.

18.08. Parking

A. Trucks and Contractor personnel vehicle parking and access shall be in compliance with local permits and ordinances and as further specified herein.

B. All construction equipment and construction vehicles arriving at the site shall park within the project site or as indicated in the Drawings or as directed by the Engineer. Worker personnel vehicles are allowed to park on neighborhood streets in those areas that allow street parking within close proximity of the site. Worker personnel vehicles shall not block existing driveways or other driveway access at any time. Workers shall enter the project site as soon as they arrive to the site.

C. Workers shall not arrive onto the site no more than 30 minutes prior to the start of work nor remain on the site 30 minutes after the end of work. The Contractor's access gates shall remain locked during the hours when construction is not allowed, except for the 30-minute period preceding and following the hours of construction. The Contractor shall ensure his/her locks for the access gates will be in tandem with District locks. The Contractor's attention is directed to Article 18.02. Hours of Work.

D. No trucks or Contractor personnel vehicles shall park in the areas outside of the Project site as specified herein unless approved in writing by the Engineer. The Contractor's construction equipment is prohibited from parking or queuing on neighborhood streets.

E. The Contractor shall not perform any loading or unloading activities or any construction related operations outside or adjacent to the project limits unless approved in writing by the Engineer.

18.09. Discovery of Archeological Artifacts and Human Remains

A. No known archeological sites were discovered on the site. If, however, burials or archeological artifacts are encountered during construction, the Contractor shall halt work immediately within 30 feet of the find. A "no work" zone shall be established utilizing appropriate flagging to delineate the boundary of this zone. The Contractor shall secure and protect the zone from vandalism. The Contractor's attention is directed Article 10.05. Burial Sites, and Article 10.06. Cultural Resources (Archeological Discovery), of these Specifications, for additional requirements.

B. If cultural resources are encountered during project implementation, the contractor shall immediately cease all work activities in the area (within approximately 30 feet) of the discovery. Prehistoric archaeological materials might include obsidian and chert flaked-stone tools (e.g. projectile points, knives, scrapers) or toolmaking debris; culturally darkened soil ("midden") containing heat-affected rocks, artifacts, or shellfish remains; and stone milling equipment (e.g., mortars, pestles, handstones, or milling slabs); and battered stone tools, such as hammerstones and pitted stones. Historic-period materials might include stone, concrete, or adobe footings and walls; filled wells or privies; and deposits of metal, glass, and/or ceramic refuse. After cessation of excavation the applicant shall immediately contact the Engineer in writing. The contractor shall not resume work until the Engineer provides written authorization.

C. Any accidental discovery of cultural resources during construction will be evaluated by the District.

D. If human remains are encountered unexpectedly during construction excavation and grading activities, no further disturbance shall occur until the County Coroner has made the necessary findings as to origin and disposition pursuant to PRC Section 5097.98. If the remains are determined to be of Native American descent, the coroner has 24 hours to notify the Native American Heritage Commission (NAHC). The NAHC will then identify the person(s) thought to be the Most Likely Descendent of the deceased Native American, who will help determine what course of action should be taken in dealing with the remains.

18.10. Aesthetic Requirements

A. Aesthetic requirements for the floodwall have been included in the individual items of work as specified in these Specifications and as shown on the Drawings.

18.11. Recreation

A. No special requirements.

18.12. Utilities and Service System

A. The Contractor's attention is directed to Article 16.02. Utilities, of these Specifications.

18.13. Payment

A. Unless noted otherwise, full compensation for Work involved in complying with all requirements under Special Provisions Section 18 Permits and Regulations shall be considered incidental and included in the Contract Price(s) paid for the various items of Work involved; no additional time shall be allowed or payment made.

SECTION 19. ENVIRONMENTAL

19.01. Compliance with NPDES General Permit—Bid Item No. 1

A. The Contractor shall prepare and submit two location specific Storm Water Pollution Prevention Plan (SWPPP) as required under NPDES General Permit. The SWPPP shall be in accordance with Section XIV SWPPP Requirements of the NPDES General Permit. Reference is made to Standard Provisions Article 10.02. Storm Water Pollution Prevention Plan.

1. One SWPPP shall be developed for all work along Lower Calera Creek E-line Sta 13+00 to Sta 41+30.

2. A second SWPPP shall be developed for the asphalt paved trail work along Lower Berryessa Creek AC1-line Sta 10+00 to 39+52, AC2-line Sta 10+00 to 13+98, AC3-line Sta 10+00 to 16+43.

3. Each location specific SWPPP shall be separate documents and shall follow the requirements of Article 19.01.01 SWPPP.

B. The Contractor shall not violate any discharge prohibition contained in the latest California Regional Water Quality Control Board San Francisco Bay Basin Water Quality Control Plan (Basin Plan, dated December 31, 2011, or later).

C. All discharges are prohibited except for the storm water and non-storm water discharges specifically authorized by the NPDES General Permit.

D. Among the discharges prohibited by the NPDES General Permit include:

1. Non-storm-water discharges such as improper dumping or leakage;

2. All discharges which contain a hazardous substance in excess of reportable quantities established in 40 C.F.R. §§ 117.3 and 302.4;

3. Any debris from construction site; and

4. Other discharges as identified in the NPDES General Permit.

5. If groundwater is encountered during construction, then the groundwater testing and discharges into the creek shall be performed to meet the water quality objectives of the San Francisco Regional Water Quality Control Board or as specified in Section 19 of these Specifications. Testing shall be performed at ten locations for the Project. The selection of testing locations shall be coordinated with the Engineer.

E. Certain non-storm water discharges may be authorized such as fire hydrant flushing, irrigation and vegetative erosion control measures, pipe flushing and testing, water to control dust, uncontaminated groundwater from dewatering, providing all the conditions are met as noted in the general NPDES permit.

F. The Contractor shall comply with the Risk Level 2 requirements of the NPDES General Permit.

19.01.01. SWPPP

A. The District will electronically file all Permit Registration Documents in the State Water Board's Storm Water Multi-Application and Tracking System (SMARTS) website. The Contractor shall provide a copy of each SWPPP and Risk Assessments as defined under Attachment C of the NPDES General Permit, to the District per Article 20.01.07. Immediate Submittals.

B. A copy of the final SWPPP, SWPPP amendments, and visual monitoring inspection logs shall be maintained at the construction site by the Contractor and shall be available at all times for review by all Contractors, by the District, or by regulatory agency personnel.

C. The Contractor's attention is directed to the Final Lake or Streambed Alteration Agreement (CDFW) in Appendix C, Measure 2.5: "Erosion control measures shall be utilized throughout all phases of the project where sediment runoff from exposed slopes threatens to enter any stream channels. At no time shall silt laden runoff be allowed to enter any stream channels. To protect exposed soils from erosion during discharges, erosion control blankets, mats, or geotextiles shall be placed over the erodible surfaces. Any erosion control materials used within the stream channels during discharges shall be removed immediately upon completion of water discharges. No erosion control materials shall contain any plastic or monofilament netting."

19.01.02. Storm Water BMPs

A. Storm water BMPs shall be in accordance with the latest CASQA Construction BMP Handbook/Portal, which is available at www.cabmphandbooks.com.

B. It is the Contractor's responsibility to determine all BMPs that are required for the construction of the Project, and to include those that are applicable in the Contractor prepared SWPPP and Erosion Control Plan.

C. The Contractor shall design, construct, operate, inspect, and maintain the BMPs in accordance with the NPDES General Permit and the guideline provided in the CASQA Construction BMP Handbook/Portal.

D. The BMPs shall include but not be limited to:

1. Erosion Control BMPs

2. Sediment Control BMPs

3. Run-on Run-Off Control BMPs

4. Wind Erosion Control BMPs

5. Tracking Control BMPs

6. Non-Storm Water Management BMPs

7. Waste Management and Materials Pollution Control BMPs

8. District BMPs

   a. Contractor shall limit impacts from staging and stockpiling materials:

      (1) To protect on-site vegetation and water quality, staging areas should occur on access roads, surface streets, or other disturbed areas that are already compacted and only support ruderal vegetation. Similarly, all equipment and materials (e.g., road rock and project spoil) will be contained within the existing service roads, paved roads, or other pre-determined staging areas.

      (2) Building materials and other project-related materials, including chemicals and sediment, will not be stockpiled or stored where they could spill into water bodies or storm drains.

      (3) No runoff from the staging areas may be allowed to enter water ways, including the creek channel or storm drains, without being subjected to adequate filtration (e.g., vegetated buffer, swale, hay wattles or bales, silt screens).

      (4) The discharge of decant water to water ways from any on-site temporary sediment stockpile or storage areas is prohibited.

      (5) During the wet season, no stockpiled soils will remain exposed, unless surrounded by properly installed and maintained silt fencing or other means of erosion control. During the dry season; exposed, dry stockpiles will be watered, enclosed, covered, or sprayed with non-toxic soil stabilizers.

   b. Contractor shall stabilize construction entrances and exits. Measures will be implemented to minimize soil from being tracked onto streets near work sites:

      (1) Methods used to prevent mud from being tracked out of work sites onto roadways include installing a layer of geotextile mat, followed by a 4-inch thick layer of 1 to 3-inch diameter gravel on unsurfaced access roads.

(2) Access will be provided as close to the work area as possible, using existing ramps where available and planning work site access so as to minimize disturbance to the water body bed and banks, and the surrounding land uses.

c. Contractor shall limit impact of concrete near waterways. Concrete that has not been cured is alkaline and can increase the pH of the water; fresh concrete will be isolated until it no longer poses a threat to water quality using the following appropriate measures:

(1) Wet sacked concrete will be excluded from the wetted channel for a period of four weeks after installation. During that time, the wet sacked concrete will be kept moist (such as covering with wet carpet) and runoff from the wet sacked concrete will not be allowed to enter a live stream.

(2) Poured concrete will be excluded from the wetted channel for a period of four weeks after it is poured. During that time, the poured concrete will be kept moist, and runoff from the wet concrete will not be allowed to enter a live stream. Commercial sealants (e.g., Deep Seal, Elasto-Deck Reservoir Grade) may be applied to the poured concrete surface where difficulty in excluding water flow for a long period may occur. If a sealant is used, water will be excluded from the site until the sealant is dry.

(3) Dry sacked concrete will not be used in any channel.

(4) An area outside of the channel and floodplain will be designated to clean out concrete transit vehicles.

d. Contractor shall prevent scour downstream of sediment removal. After sediment removal, the channel will be graded so that the transition between the existing channel both upstream and downstream of the work area is smooth, and continuous between the maintained and non-maintained areas, and does not present a sudden vertical transition (wall of sediment) or other blockage that could erode once flows are restored to the channel.

e. Contractor shall maintain clean conditions at work sites.

(1) The work site, areas adjacent to the work site, and access roads will be maintained in an orderly condition, free and clear from debris and discarded materials on a daily basis. Debris may include unused or discarded construction materials, lunch wrappers, cigarette butts, etc. Personnel will not sweep, grade, or flush surplus materials, rubbish, debris, or dust into storm drains or waterways.

(2) For activities that last more than one day, materials or equipment left on the site overnight will be stored as inconspicuously as possible, and will be neatly arranged. Any materials and equipment left on the site overnight will be stored to avoid erosion, leaks, or other potential impacts to water quality.

(3) Upon completion of work, all building materials, debris, unused materials, concrete forms, and other construction-related materials will be removed from the work site. Prevent litter from escaping by covering loads that are being transported to and from site.

f. Contractor shall prevent water pollution.

(1) Oily, greasy, or sediment laden substances or other material that originate from the project operations and may degrade the quality of surface water or adversely affect aquatic life, fish, or wildlife will not be allowed to enter, or be placed where they may later enter, any waterway.

(2) For projects that disturb over one acre of soil, the District will comply with the Construction General Permit (Order 2009-009-DWQ). All project must comply with the Municipal Regional Stormwater Permit Provision C.6. Construction Site Control.

g. Contractor shall prevent stormwater pollution. To prevent stormwater pollution, the applicable measures from the following list will be implemented:

(1) Soils exposed due to project activities will be seeded and stabilized using hydroseeding, straw placement, mulching, and/or erosion control fabric. These measures will be implemented such that the site is stabilized and water quality protected prior to significant rainfall. In creeks, the channel bed and areas below the Ordinary High Water Mark are exempt from this BMP.

(2) The preference for erosion control fabrics will be to consist of natural fibers; however, steeper slopes and areas that are highly erodible may require more structured erosion control methods. No non-porous fabric will be used as part of a permanent erosion control approach. Plastic sheeting may be used to temporarily protect a slope from runoff, but only if there are no indications that special-status species would be impacted by the application.

(3) Erosion control measures will be installed according to manufacturer's specifications.

(4) To prevent stormwater pollution, the appropriate measures from, but not limited to, the following list will be implemented:

(a) Silt Fences

(b) Straw Bale Barriers

(c) Brush or Rock Filters

(d) Storm Drain Inlet Protection

(e) Sediment Traps or Sediment Basins

(f) Erosion Control Blankets and/or Mats

(g) Soil Stabilization (i.e., tackified straw with seed, jute or geotextile blankets, etc.)

(h) Straw mulch.

(5) All temporary construction-related erosion control methods, including all products containing plastic or monofilament materials, shall be removed at the completion of the project (e.g. silt fences).

(6) Surface barrier applications installed as a method of animal conflict management, such as chain link fencing, woven geotextiles, and other similar materials, will be installed no longer than 300 feet, with at least an equal amount of open area prior to another linear installation.

E. Construction BMPs within Milpitas Right of Way:

1. Construction grading and erosion control plans shall contain BMPs designed to prevent stormwater pollution during construction. These BMPs must be site-specific and seasonally- and phase-appropriate covering the following six categories:

a. Erosion control
b. Run-on and run-off control
c. Sediment control
d. Active treatment systems (as necessary)
e. Good site management
f. Non stormwater management Sediment Control BMPs

2. Designers are referred to the following MRP-approved guidance documents for the specific design requirements of appropriate construction BMPs:

   a. California BMP Handbook, Construction, California Association of Stormwater Agencies, January 2003.

   b. Caltrans Stormwater Quality Handbooks, Construction Site Best Management Practices Manual, March 2003, and addenda.

   c. California Regional Water Quality Board, San Francisco Bay Region, Erosion and Sediment Control Field Manual, 2002. Wind Erosion Control BMPs

19.01.03. Risk Level 1 Requirements

A. No special requirements.

19.01.04. Risk Level 2 Requirements

A. The Contractor shall comply with the latest permit conditions, including but not limited to all **Risk Level 2** requirements as outlined below in accordance with the NPDES General Permit.

1. Effluent Standards

   a. Narrative

   b. Numeric Effluent Standard:

      (1) (pH (tested twice daily): NAL of 6.5 to 8.5 and no deviation greater than 0.5 compared to ambient levels.

      (2) (Turbidity (tested twice daily): NAL of 250 NTU, no incremental increase of 5 NTUs if background is less than 50 NTU, and no incremental increase by 10% if background is greater than or equal to 50 NTUs.

      (3) Dissolved oxygen (tested twice daily): minimum of 5.0 mg/L or no change if background is less than 5.0 mg/L.

      (4) Temperature (tested twice daily): No increase of more than 5 degrees Fahrenheit compared to natural temperatures.

      (5) Floating, suspended, or deposited macroscopic particulate matter or foam (daily visual observation): No alteration of apparent color beyond present natural background levels or visible floating, suspended, or deposited oil or other products of petroleum origin.

2. Good Site Management “Housekeeping”
3. Non-Storm Water Management
4. Erosion Control
    a. No erosion control materials shall contain any plastic or monofilament netting.
5. Sediment Control
6. Run-on and Runoff Controls
7. Inspection, Maintenance and Repair
8. Rain Event Action Plan
9. Risk Level 2—Monitoring and Reporting Requirements
    a. Construction Site Monitoring Program Requirements
    b. Objectives
    c. Risk Level 2—Visual Monitoring (Inspection) Requirements for Qualifying Rain Events
    d. Risk Level 2—Water Quality Sampling and Analysis
    e. Risk Level 2—Storm Water Discharge Water Quality Sampling Locations
    f. Risk Level 2—Visual Observation and Sample Collection
    g. Risk Level 2—Storm Water Sample Collection and Handling Instructions
    h. Risk Level 2—Monitoring Methods
    i. Risk Level 2—Analytical Method
    j. Risk Level 2—Non-Storm Water Discharge Monitoring Requirements
    k. Risk Level 2—Non-Visible Pollutant Monitoring Requirements
    l. Risk Level 2—Watershed Monitoring Option
    m. Risk Level 2—Particle Size Analysis for Project Risk Justification

n. Risk Level 2—Records

(1) Submit monthly to the Engineer records of inspections and finding.

(2) Inspection records shall available for onsite review by Regional Water Quality Control Board and District.

o. Risk Level 2—NAL Exceedance Report

10. Annual Reporting Requirements:

a. The Contractor shall comply with the Annual Reporting Requirements per Section XVI of the NPDES General Permit. The Contractor shall prepare and submit The Annual Report to the District by July 15 of each year. The Annual Report shall be submitted to and shall have been favorably received by the Engineer. The District will electronically file the Annual Report in SMARTS. The first Annual Report submittal year is 2021. An Annual Report in a given calendar year is not required when the Engineer determines in the final inspection that the work has been completed before September of that year.

B. The Contractor's attention is directed to the Final Lake or Streambed Alteration Agreement (CDFW) in Appendix C, Measure 2.2: "Precipitation forecasts shall be considered when planning construction activities. Construction activities shall cease and all necessary erosion control measures shall be implemented prior to the onset of substantial precipitation defined as 0.5 inch or more within a 24-hour period. Construction activities that are halted due to precipitation may resume when precipitation ceases and the National Weather Service 72-hour weather forecast indicates a 20% or less chance of precipitation. Weather forecasts shall be documented upon request by CDFW."

19.01.05. Payment

A. Full compensation for doing all Work necessary to comply with the NPDES General Permit, including the preparation and implementation of the SWPPP; all Materials, labor, Equipment, service, supervision, documentation, and submittals shall be included in the lump sum price bid for compliance with COMPLIANCE WITH NPDES GENERAL PERMIT, Bid Item No. 1, if authorized by the District.

19.02. Other Discharge Permits

A. In addition to the requirements outlined in the NPDES permit, the Contractor shall also follow the water quality monitoring procedures in Appendix C, Section 6 of the Dewatering Plan approved by the RWQCB dated June 10, 2014.

19.03. BMP Action Plan

A. No Special Requirements.

19.04. Water Pollution Discharges

A. The Contractor shall implement dewatering of the creek in accordance with the Dewatering Plan approved by the RWQCB dated June 10, 2014. The Contractor's attention is directed to the Water Quality Certification from the San Francisco Bay Regional Water Quality Control Board in Appendix C, Condition 9: "The District shall implement dewatering and rewatering activities for each creek reach as described in the Dewatering Plan. Any changes to the Dewatering Plan must receive Regional Water Board Executive Officer approval before the changes are implemented."

1. The Contractor's attention is directed to the Water Quality Certification from the San Francisco Bay Regional Water Quality Control Board in Appendix C, Condition 18: "Groundwater or accumulated storm water removed during dewatering of excavations shall not be discharged directly to waters of the State without meeting the following conditions: Any groundwater or accumulated storm water released to waters of the State shall not result in changes in turbidity of the receiving waters that cause nuisance or adversely affect beneficial uses. Increases from normal background light penetration or turbidity relatable to the discharge shall not be greater than 10 percent in areas where natural turbidity is greater than 50 NTU. Any groundwater discharged to waters of the State shall have a pH in the range of 6.5 to 8.5."

B. The Contractor's attention is directed to the Water Quality Certification from the San Francisco Bay Regional Water Quality Control Board in Appendix C, Condition 7: "Concrete used in the Project shall be allowed to completely cure (a minimum of 28-days) or be treated with a CDFW-approved sealant before it comes into contact with flowing water."

C. The Contractor's attention is directed to the Water Quality Certification from the San Francisco Bay Regional Water Quality Control Board in Appendix C, Condition 4: "No equipment shall be operated in stream channels or other waters where there is flowing or standing water. No fueling, cleaning, or maintenance of vehicles or equipment shall take place within any areas where an accidental discharge to waters of the State may occur."

19.05. Regulated Material Management

A. The Contractor's attention is directed to Article 10.11. Regulated Material Management, in the Standard Provisions of these Specifications.

19.05.01. Asbestos Management

A. No Special Requirements.

19.05.02. Lead Management

A. No Special Requirements.

19.06. Solid Materials Management

19.06.01. Definitions

A. Certified Facility: A reuse, recycling, composting, or Materials recovery facility meeting the required Diversion percentages set forth in this Specification, which the Engineer (i) has determined can accept diverted Material; (ii) has obtained all applicable Federal, State, and Local permits; and (iii) is in full compliance with all applicable regulations for reuse, recycling, composting, and/or Materials recovery.

B. Construction Waste: Building and site improvement Materials and other solid waste resulting from construction, remodeling, renovation, or repair operations. Construction waste does not include any of the above specified Material/solid waste that contains contaminated or hazardous substances. Construction waste does not include excavated soil or groundwater.

C. Demolition Waste: Building and site improvement Materials resulting from demolition or selective demolition operations. Demolition waste does not include any of the above specified Material/solid waste that contains contaminated or hazardous substances.

D. Disposal: Removal off site of demolition and construction waste and subsequent sale, recycling, reuse, or deposit in a landfill or an incinerator acceptable to authorities having jurisdiction.

E. Divert/Diversion: Use of Materials for any lawful purpose other than disposal in a landfill or in a transformation facility.

F. Post-Consumer Recycled Content: The percentage of a new product that contains Materials that were recycled from product that was used by the end consumer and then collected for recycling.

G. Recycle: Recovery of demolition or construction waste for subsequent processing in preparation for use in some other form.

H. Salvage: Recovery of demolition or construction waste and subsequent sale or reuse in the same form in another facility.

I. Transformation Facility: A facility whose function is to convert, combust, or otherwise process solid waste by incineration, pyrolysis, destructive distillation, or gasification or to chemically or biologically process solid waste for the purpose of volume reduction, synthetic fuel production, or energy recovery. A composting facility is not a transformation facility.

19.06.02. Construction and Demolition Waste Management

A. The Contractor shall prepare and implement a Solid Materials Management Plan that results in a minimum end-of-project rate of recycle/salvage of 50 percent by weight of total construction and demolition waste generated by the work. Construction and demolition waste shall consist of the following materials: asphalt, concrete, masonry, wood/lumber, soil, and metals.

B. The Contractor's attention is directed to the Final Lake or Streambed Alteration Agreement (CDFW) in Appendix C, Measure 2.13: "Debris, soil, silt, bark, rubbish, slash, sawdust, creosote-treated wood, raw cement/concrete or washings thereof, asphalt, paint, or other coating material, oil, or other petroleum products, or any other substances which could be hazardous to aquatic life, resulting from project-related activities, shall be prevented from contaminating the soil and/or entering the waters of the State. Any of these materials, placed within or where they may enter a stream or lake, by Permittee or any party working under contract, or with the permission of the Permittee, shall be removed immediately. All chemicals stored in staging areas shall be stored in secondary containment with no less than 110% capacity. Proper storage and security shall be implemented to ensure that chemicals are not spilled or vandalized."

C. The Contractor shall submit a Solid Materials Management Plan identifying procedures to be used for management of construction and demolition waste generated by the work, including the facilities to be used for both disposal and recycling/salvaging and the estimated quantities and percentages (by weight) of construction demolition waste disposed and recycled/salvaged categorized by waste type. For each facility listed in the waste management and recycling plan, the Contractor shall provide facility name and address and facility owner name and contact information. This submittal shall be approved by the Engineer prior to commencement of any work on the project site. The Contractor is directed to the City of San Jose's Construction and Demolition Deposit (CDD) Program: https://www.sanjoseca.gov/your-government/environment/recycling-garbage/construction-demolition-debris for local construction and demolition waste recycling service provider listings. Additional recycling resources are available at www.calrecycle.ca.gov/condemo.

D. Annually on the 25th of January, the Contractor shall complete and submit a Solid Materials Management Report Form which documents materials recycled/salvaged and disposed and demonstrates compliance with the requirements specified herein, facilities utilized, and weights of construction and demolition waste generated by the Project, as well as attach receipts that verify materials and quantities disposed and recycled/salvaged. The Form and receipts shall be included as a part of the Contractor's monthly progress pay request. This Form is included in Appendix F. The Contractor shall also complete and submit the Form with the request for final payment.

E. Full compensation for completing the Solid Materials Management Plan and for completing the Solid Materials Management Report Form shall be considered as

included in the contract price for various items of work involved and no additional compensation will be allowed therefore.

19.06.03. Post-Consumer Recycled Content (PCRC) Requirements

A. At the conclusion of the Project, the Contractor shall list Materials furnished/installed that contains PCRC and document the percent content for each Material item listed. This information shall be included in the solid Material management report form specified in Article 19.06. Solid Materials Management.

B. Full compensation for documenting the above specified information in the solid material management report form shall be considered as included in the Contract Price(s) for various items of Work involved; no additional payment shall be made.

19.07. Migratory Birds – Bid Item No. 5

A. The Contractor shall refer to Standard Provisions Article 10.14. Migratory Birds, for additional requirements.

19.07.01. Regulatory Requirements

A. The District will have monitored and controlled the site, including management of vegetation, installing and maintaining protective buffer zones and exclusion devices, as necessary, until the issuance of the Notice to Begin Work, at which time the site will be released to the Contractor. Once the District officially releases the site to the Contractor, the Contractor shall assume complete responsibility for the site, including vegetation management, existing protective buffer zones and exclusion devices, and shall perform all required work as specified herein. Any presence of bird nests at the project site upon release of the site to the Contractor shall be the Contractor's responsibility to mitigate and control, and Contractor shall not use the presence of bird nests within the whole project site, upon site release, as cause for time and/or cost delay claims.

B. Contractor shall also perform bird surveys after the site has been released if there is a hiatus of 15 days or more in construction activities and install exclusion devices that are approved by the Engineer, as necessary, to avoid potential delays to the project related activities.

C. The Contractor shall notify the Engineer in writing at least 15 days and no more than 30 days in advance of initiation of project-related activities, such as movement of equipment, materials stockpiling, bridge work, clearing, grubbing, excavation, establishment of site access, etc.

19.07.02. Qualified Biologist

A. The Contractor shall employ a biologist meeting the qualifications of a Qualified Biologist as listed in Article 19.07.02. Qualified Biologist, paragraphs B and C, to supervise all biological resource Work for the Project. The qualified biologist shall be approved in advance of biologist work by CDFW based on CDFW's

review of resume provided by the Contractor. At any time during the Contract, the District reserves the right to request a replacement biologist due to nonperformance or for reasons outlined in Standard Provisions Article 3.04. Character of Workers.

B. The Contractor's Qualified Biologist shall have the training, experience and qualifications to perform the migratory bird compliance describe in the Article and to supervise all migratory bird-related activities under Article 19.07. Migratory Birds. The Contractor's Qualified Biologist shall possess educational and professional training in ornithology, habitat assessment, nesting bird abatement, and migratory bird regulations; and shall be familiar with the species of birds and bird resources likely to be encountered on the Project. The Contractor's Qualified Biologist shall have experience to implement protocols, perform nesting bird abatement, collect and organize ornithological data and be capable of making appropriate decisions in the field.

C. In addition to the duties listed in Article 10.14.01.B., to become a CDFW-Approved Qualified Biologist the Contractor's Qualified Biologist shall have the following qualifications:

1. Refer to Appendix B for the qualifications of Contractor Biologist.

2. A minimum of five years of academic training and professional experience in biological sciences and related resource management activities with a minimum of two years conducting surveys for nesting birds and wester pond turtles.

19.07.03. General Nesting Seasons

A. The Contractor shall refer to Article 10.14.01. Scope of Work. The Contractor's attention is directed to the Final Lake or Streambed Alteration Agreement (CDFW) in Appendix C, Measure 2.7: "If construction, grading, or other project-related improvements are scheduled during the nesting season of protected raptors and migratory birds January 15 to September 1, a focused survey for active nests of such birds shall be conducted by a qualified biologist within fourteen days prior to the beginning of project-related activities. The results of the survey shall be submitted to the Engineer and approved prior to the start of project activities. If a lapse in project-related work of fifteen days or longer occurs, another focused survey shall be required before project work can be reinitiated." Annual variation in climatic conditions can alter these periods by several weeks and active nests shall be protected year-round with the buffer zones prescribed in Article 19.07.04. Protective Buffer Zones.

19.07.04. Protective Buffer Zones

A. The Contractor's attention is directed to the Final Lake or Streambed Alteration Agreement (CDFW) in Appendix C, Measure 2.8: "A minimum 50-foot radius protective buffer zone shall be established around active nests except for raptors, herons, and egrets. A minimum 300-foot radius protective buffer zone shall be

established around active nests for hawks, owls, herons, and egrets. All protective buffer zones shall be maintained, and no entrance shall be allowed into protective buffer zones, until the nest becomes inactive. If monitoring shows that disturbance of actively nesting birds is occurring, buffer widths shall be increased until monitoring shows that disturbance is no longer occurring. If this is not possible, work shall cease in the area until young have fledged and the nest is no longer active."

19.07.05. Exclusion Devices

A. The Contractor shall submit a Nesting Bird Abatement Plan prior to the installation of any bird exclusionary measures. The Plan must include specifications for all proposed exclusionary materials and all proposed locations of installation. The Plan must be approved by the Engineer prior to the installation of any exclusionary measures.

B. The Contractor shall refer to Article 10.14.05. Exclusion Devices.

19.07.06. Nest Prevention

A. Cutting and removing vegetation in channels during the rainy season from October 15 through May 1 and as specified in the Project-specific permit conditions (Appendix C) shall be as specified in the Special Provisions and be limited to hand tools, unless approved otherwise by the Engineer.

B. The Contractor shall refer to Article 10.14.06. Nest Prevention.

C. Wetlands: Vegetation management in wetlands shall conform to the terms and conditions of all applicable permits (e.g., Section 404 permit, Section 401 Water Quality Certification, Streambed Alteration Agreement, etc.).

19.07.07. Submittals

A. The Contractor shall refer to Article 10.14.07. Submittals, and Article 19.07.02. Qualified Biologist.

B. Submit nesting bird survey reports to the Engineer within two days upon completion of the survey and at least two days prior to commencement of the project-related activities. Reports shall be submitted to the Engineer to facilitate their review and submittal to CDFW. All reports must be received by the CDFW prior to the start of work activities. If a lapse in project-related work of 15 days or longer occurs, another nesting bird survey shall occur. Bird nest surveys shall be completed no more than 14 days prior to construction date.

19.07.08. Payment

A. Full compensation for providing all labor and Material for doing all Work necessary to prevent bird nesting, including providing a Qualified Biologist for migratory bird monitoring and surveying; providing biological sensitivity and bird

nesting awareness training to all Contractor personnel; establishing, installing, maintaining, reconfiguring, removing, and inspecting protective buffer zones and/or exclusion devices; and performing all other Work as specified in this Article shall be included in the lump sum price bid for MIGRATORY BIRDS, Bid Item No. 5, if authorized by the District.

19.08. Other Wildlife and Fish Species

A. In addition to the Migratory Bird Requirements, above, the Contractor shall comply with all regulatory and permit requirements pertaining to other wildlife and fish species with the potential to occur within the project area.

B. The sensitive species that could be present along the project site include, but not limited to: western pond turtle (*Actinemys marmorata*) and nesting migratory birds. The Contractor Biologist shall survey for sensitive plants and animal species in the project vicinity.

C. The Contractor's attention is directed to the Final Lake or Streambed Alteration Agreement (CDFW) in Appendix C, Measure 2.9: "Prior to and within 48 hours of the planned start of project activities, a focused survey for western pond turtle shall be conducted by a qualified biologist (approved Contractor Biologist) to determine if they are in the area." If a western pond turtle is observed, no project activities shall begin and the Contractor shall inform the Engineer immediately. The Engineer will facilitate the CDFW notification and after consultation with CDFW will inform the Contractor how to proceed. Additional measures such as installing exclusionary fencing and daily inspections by a Qualified Biologist would likely be implemented, but their specifics must first be approved by CDFW.

D. If a western pond turtle is observed at any time during the project, work shall be suspended and the Engineer should be notified immediately. The Engineer will facilitate the CDFW notification and after consultation with CDFW will inform the Contractor how to proceed. Additional measures such as installing exclusionary fencing and daily inspections by a Qualified Biologist would likely be implemented, but their specifics must first be approved by CDFW. The Contractor's attention is directed to the Final Lake or Streambed Alteration Agreement (CDFW) in Appendix C, Measure 2.10: "If western pond turtles are found, they shall be excluded from entering the project site. CDFW-approved exclusion fencing shall be installed around those areas or where equipment may be stockpiled. The lower edge of the fence shall be buried at least four (4) inches to prevent burrowing animals from tunneling under the fence."

E. The Contractor's attention is directed to the Final Lake or Streambed Alteration Agreement (CDFW) in Appendix C, Measure 2.11: "If western pond turtles are found, after installation of the fence barrier, the biological monitor (or qualified biologist) shall conduct daily inspections of the project work area, and staging area prior to the commencement of construction activities. If the biological monitor or qualified biologist determines that sensitive species are not within the work area, equipment or materials may be moved onto the work site and project

activities may commence under the direct observation of the biological monitor or qualified biologist."

19.09. Sensitive Plants and Vegetation

A. All roots encountered during project excavations or earthwork must be cleanly cut, trimmed, and covered as soon as possible. The Contractor's attention is directed to the Water Quality Certification from the San Francisco Bay Regional Water Quality Board in Appendix C, Condition 2: "Disturbance or removal of vegetation shall be minimized. The site shall be stabilized through incorporation of appropriate BMP's, including the successful reestablishment of native vegetation, to enhance wildlife habitat values, and to prevent and control erosion and sedimentation."

19.10. Proper Pruning Techniques for Woody Vegetation Removal

A. No special requirements.

19.11. Plant Pathogen Management

A. No special requirements.

19.12. Payment

A. Unless noted otherwise, full compensation for Work involved in complying with all requirements under Special Provisions Section 19 Environmental shall be considered incidental and included in the Contract Price(s) paid for the various items of Work involved; no additional time or payment shall be made.

THIS PAGE INTENTIONALLY LEFT BLANK

SECTION 20. SUBMITTAL AND QUALITY REQUIREMENTS

20.01. Additional Submittal Requirements

A. This Article includes any additional submittal requirements. Also, see Standard Provisions Section 7 Submittal Management.

B. The District utilizes ProjectWise to manage construction projects, track change orders, and review submittals. The Contractor shall utilize the District's ProjectWise (Web-Based Construction Document Management) system for submittals, requests for information, and contract change orders. Refer to Article 20.01.01. Summary, for all requirements.

20.01.01. Summary

A. The Contractor, and its subcontractors and suppliers shall utilize ProjectWise for submission of all data and documents throughout the duration of the Contract, unless specified otherwise in the Contract Documents. The term “Copy” or “Copies” shall refer to electronic copies unless a hard copy is specified. Where a hard copy is specified, both electronic and paper versions shall be submitted:

1. ProjectWise is a web-based construction management application hosted by Bentley Systems, Inc. ProjectWise is a registered trademark of Bentley Systems, Inc.

2. ProjectWise is paid for by the District.

3. ProjectWise will be made available to all Contractor's personnel, subcontractor personnel and suppliers working under the Contract.

4. ProjectWise shall be the primary means of project information submission and management.

B. Related Sections:

1. Article 7.01. Submittal Requirements.

C. The Engineer will establish the Contractor's access to ProjectWise by allowing access and assigning user profiles to accepted Contractor personnel. User profiles will define levels of access into the system and determine assigned function-based authorizations and user privileges to enter and access information in ProjectWise. Subcontractors and suppliers will be given access to ProjectWise by and through the Contractor. Entry of information exchanged and transferred between the Contractor and its subcontractors and suppliers on ProjectWise shall be the responsibility of the Contractor.

D. Within five (5) work days after receiving the Notice to Begin Work, the Contractor shall submit:

1. List of Contractor's personnel responsible for ProjectWise administration, as well as that for the Contractor's subcontractors and suppliers.

2. Include descriptions of key personnel's roles and responsibilities for this project. Contractor shall also identify its organization's administrator on the list.

E. Data entered in a collaborative mode (entered with the intent to share as determined by permissions and workflows within the ProjectWise system) by the Engineer and the Contractor will be jointly owned.

F. The Contractor is responsible for managing, tracking, and documenting the Work to comply with the requirements of the Contract Documents. The District's acceptance via automated system notifications or audit logs extends only to the face value of the submitted documentation and does not constitute validation of the Contractor's submitted information.

20.01.02. Computer and Connectivity Requirements

A. The Contractor shall use computer hardware and software that meets the requirements of ProjectWise system as recommended by Bentley Systems, Inc. and as described herein to access and utilize ProjectWise. As recommendations are modified by ProjectWise, the Contractor shall upgrade its system(s) to meet or exceed the recommendations. Upgrading of the Contractor's computer systems shall not be justification for a cost or time modification to the Contract.

B. The Contractor shall ensure that connectivity to the ProjectWise system is accomplished through DSL, cable, T-1 or wireless communications systems. The minimum bandwidth requirement for using the system is 128 kb/s. It is recommended that a faster connection be used when uploading pictures and files into the system.

C. ProjectWise currently supports Mozilla's Firefox v3.0-3.6, Apple's Safari v3.0-5.0, and Microsoft's Internet Explorer v7.0-8.0 web browsers for accessing the application.

D. ProjectWise is a web-based environment and therefore, subject to the inherent speed and connectivity limitations of the Internet. The Contractor is responsible for its own connectivity to the Internet. ProjectWise response time is dependent on the Contractor's equipment, including processor speed, Internet access speed, etc. and current traffic on the Internet. The District will not be liable for any delays associated from the usage of ProjectWise including, but not limited to: slow response time, down time periods, connectivity problems, or loss of information. The Contractor shall ensure connectivity to the ProjectWise system (whether at the home office or job site). Under no circumstances will usage of ProjectWise be grounds for a time extension or cost adjustment to the Contract.

20.01.03. Contractor Responsibility

A. Contractor shall be responsible for scanning or otherwise converting to electronic format all project submittals and Contractor correspondence, drawings, sketches, etc., and uploading them to the ProjectWise web site.

B. The Contractor shall be responsible for the validity of its information placed in ProjectWise.

C. Accepted users shall be knowledgeable in the use of computers, including Internet Browsers, email programs, CAD drawing applications, and Portable Document Format (PDF) document distribution program.

D. The Contractor shall utilize the existing forms in ProjectWise to the maximum extent possible. If a required form does not exist in ProjectWise, the Contractor shall include a form of its own or one provided by the Engineer (if available) as an attachment to a submittal.

E. PDF documents shall be created through electronic conversion rather than optically scanned whenever possible. If optically scanned, the document shall be converted through an OCR (Optical Character Reader) so that all documents are searchable. If the documents have multiple sections then the Contractor shall provide a "bookmark" for each section. The Contractor is responsible for the training of its personnel in the use of ProjectWise (outside what is provided by the District) and the other programs indicated above as needed. The Contractor shall disable all security so that copying and pasting of information from the PDF document is enabled.

F. The Contractor shall provide a list of key ProjectWise personnel for the Engineer's acceptance. Contractor is responsible for informing the Engineer of additional personnel, subcontractors and suppliers to be added to the system, or of personnel, subcontractors and suppliers to be removed from the system. The Engineer reserves the right to perform a background check on all potential users.

20.01.04. Training

A. The District will provide training consisting of two web-based seminars in conjunction with a conference call. Additionally, one classroom training seminar may also be required. The training seminars are 2 hours each.

B. Contractor shall arrange and pay for the facilities and hardware/software required to facilitate the Contractor's own training.

20.01.05. ProjectWise Utilization

A. ProjectWise shall be utilized in connection with all document and information management required by these Contract Documents. Documents and information to be submitted electronically include, but are not limited to, the documents described below.

B. Submittals:

1. Submittals shall be in accordance with Article 7.05, Submittals to be Furnished by the Contractor, and Article 7.06. Submittal Review Procedures.

2. In addition to electronic copies transmitted via ProjectWise, the Contractor shall provide one hard copy of each favorably reviewed submittal. Favorable Review consists of those submittals returned to the Contractor with action marked as “No Exceptions Noted,” “Make Corrections as Noted,” or “In Receipt Of.”

C. Administrative documents: All correspondence shall be submitted using ProjectWise. Examples include, but are not limited to:

1. Written correspondence (letters, memos, etc.).
2. Requests for Information (RFI).
3. Certified Payroll.
4. Survey Requests
5. Compliance documentation (test reports, QA/QC reports, certifications).

D. Schedules:

1. All schedules and associated updates shall be submitted in accordance with Article 5.5. Progress Schedules, of these Specifications.

2. All schedules and associated updates shall be submitted as specified in these Contract Documents and as a native backed-up file of the scheduling program being used. The schedule shall be posted as a PDF file in the format specified in these Contract Documents and as a backed-up file.

E. Operations and Maintenance Documents:

1. Operations and Maintenance Documents shall be submitted in accordance with Article 14.10. Operations and Maintenance Documents, of these Specifications.

2. In addition to electronic copies transmitted via ProjectWise, the Contractor shall provide hard copies of each final favorably reviewed Operations and Maintenance submittal. The number of hard copies to be provided shall be as required in Article 14.10. Operations and Maintenance Documents, of these Specifications.

F. Financial Documents:

1. Schedule of Values.

2. Monthly Applications for Payment.

3. Change Order Requests and Proposals.

4. Change Order supporting documentation, including Daily Extra Work Reports.

5. Requirements for Financial Documents shall be in accordance with Section 21 Payment Procedures, of these Specifications. Supporting material for Financial Documents shall be submitted on ProjectWise utilizing both the Schedule of Costs format and as PDF attachments.

20.01.06. General Requirements

A. Submittals shall be in accordance with Standard Provisions Article 7.05. Submittals to be Furnished by the Contractor, unless otherwise modified herein.

20.01.07. Immediate Submittals

A. Physical construction Work cannot begin until the following immediate submittals have been favorably reviewed by the Engineer. These immediate submittals shall be submitted no later than 20 Days after the date of issuance of the NTP.

1. Section 03 Résumé of Project Superintendent
2. Section 05 Preliminary Progress Schedule
3. Section 08 Injury and Illness Prevention Plan
4. Section 08 Site Security and Protection Plan
5. Section 08 Site-Specific Safety and Health Plan
6. Section 09 & 20 Quality Control Plan, including personnel qualifications
7. Section 10 & 27 Traffic Control Plan
8. Section 15 Résumé of Contractor Independent Surveying Firm
9. Section 18 Contractor-Obtained Permits
10. Section 19 Storm Water Pollution Prevention Plan
11. Section 19 Résumé of Contractor's Qualified Biologist
12. Section 19 Construction and Demolition Debris Management Plan
13. Section 20 Résumé of Independent Water Quality Monitoring Contractor
14. Section 23 Control of Water Plan
15. Section 24 Proposed Excavation and Recycling Plan

20.01.08. Special Review Cycle

A. The Contractor's attention is directed to Standard Provisions Article 7.06. Submittal Review Procedures, for submittals that require the Engineer's review and the review cycle.

20.01.09. Copies

A. The number of copies of submittals described herein supersedes the submittal copy requirements described in Standard Provisions Article 7.05. Submittals to be Furnished by the Contractor and in Article 9.12.02. Product Data and Samples.

1. Shop Drawings and product data: Sufficient copies to allow five (5) copies to be retained by the Engineer plus one (1) copy to be returned to the Contractor for the Contractor's use.

2. Samples: Sufficient numbers to allow two (2) samples of all structural and architectural products involving color, finish, texture, etc. and one (1) sample of other products to be retained by the Engineer plus one (1) sample to be returned to the Contractor for the Contractor's use.

3. It shall be the Contractor's responsibility to copy and/or to conform reviewed submittals in sufficient numbers for its files and for Subcontractors and vendors.

4. For up to 20 selected submittals, the Engineer shall request additional copies of a submittal for use by the Engineer and by District but no more than ten (10) copies in total. The Contractor shall provide these additional copies.

20.02. Exclusive Testing by the District

A. The Contractor's attention should be directed to Standard Provisions Article 9.10.01. Testing by the District.

B. The District's testing firm will perform field and laboratory testing for City of Milpitas items of work such as concrete for sidewalk and curb/gutter, asphalt pavement for paved trail and street, and aggregate base for subgrade. The Contractor's attention is directed to Article 25.01. for Exterior Flatwork within City of Milpitas Right of Way.

20.03. Additional Testing Certifications

A. Prior to the Contractor performing any test that require the services of an independent laboratory, the Contractor shall first obtain written approval from the Engineer to utilize such independent commercial testing firm. Such laboratory is to be listed in the Contractor's QA/QC Program as detailed herein. The testing firm's laboratory shall be staffed with experienced technicians, properly equipped and fully qualified to perform the tests in accordance with the specified standards. Any and all personnel that are expected to perform such tests shall be listed in the Contractor's QA/QC Program with resumes detailing each individual's experience.

B. The Contractor's independent testing laboratory shall be accredited by the American Association of State Highway and Transportation Officials (AASHTO) for the tests they will perform and as appropriate to the construction work being performed. The Contractor's laboratory shall also be AASHTO accredited in: ASTM C1077, "Practice for Laboratories Testing Concrete and Concrete Aggregates for Use in Construction and Criteria for Laboratory Evaluation"; ASTM D3740, "Practice for Evaluation of Agencies Engaged in Testing and/or Inspection of Soil and Rock as Used in Engineering Design/Construction"; and

ASTM D3666, "Specifications for Minimum Requirements for Agencies Testing and Inspecting Bituminous Paving Materials."

C. Water quality testing, shall be performed by a 3rd party testing firm with the following requirements; demonstrate a proven track record of at least three representative projects with references; submit resume detailing personnel for District approval. Water quality testing reports shall be provided to the District by e-mail after each sampling event (i.e., twice a day).

D. Test reports shall be submitted in accordance with Article 7.04. Submittal Format, and Article 20.01. Additional Submittal Requirements, of these Specifications.

E. The Engineer may request additional testing services other than those required by the project specifications and documents.

F. All retests required by the independent testing firm, to comply with the quality of the project plans and specifications, shall be accommodated by the Contractor at no additional cost to the District.

20.04. Contractor's Quality Control – Bid Item No. 6

20.04.01. Quality Control Plan

A. The Contractor's attention is directed to Standard Provisions Article 9.03. Contractor's Quality Control Program.

20.04.02. Contractor's Quality Control Staffing Requirements

A. The Contractor shall provide qualified QC personnel with assigned QC functions reporting to a Field QC Manager. Quality Control personnel shall perform no other functions other than quality management and shall have no supervisory or managerial responsibility over the Work force.

B. The Field QC Manager has the overall responsibility to develop, manage, and implement the QC plan to ensure that all Work complies with the quality set forth in the Contract. The Field QC Manager shall be present on-site, perform inspections throughout the Project duration, and bring in other QC personnel as necessary based on its expertise and on the need for continuous quality inspections at various Work areas. The Field QC Manager shall report directly to a senior manager of the Contractor and shall have no supervisory, managerial responsibility over the work force, or tied to production activities to ensure organizational freedom, identify quality problems, and initiate and recommend solutions. The QC plan submittal shall include a letter signed by a principal officer of the Contractor's firm designating the Field QC Manager and quality staff and specifying the authority delegated to the Field QC Manager and staff to direct cessation or removal and replacement of defective Work.

C. The field QC representative(s) shall be on-site whenever Work permanently incorporated into the Project is being performed (but not less than the daily hours

specified in the Contract Documents) to verify that Work is being performed properly and to make multiple observations of all Work in progress.

D. To be considered qualified, the Contractor's quality personnel shall meet the minimum requirements listed below. The Contractor is responsible for ensuring that assigned personnel have appropriate qualifications above the minimum listed herein:

1. The Field QC Manager shall have, at a minimum, a bachelor's degree in engineering, architecture, or construction management and a minimum of ten (10) years' construction experience on construction projects similar to this Contract. The District will consider an additional five (5) years' experience, for a total of 15 years' experience on construction projects similar to this Contract, as a substitution for a bachelor's degree. The Field QC Manager shall also have a certificate of completion of the course "Construction Quality Management for Contractors" or equivalent. (Note: This course is available through the Army Corps of Engineers and/or through the Naval Facilities Engineering Command.).

2. The Lead Test Coordinator shall have, at a minimum, a bachelor's degree in mechanical or electrical engineering, with a minimum of five (5) years' experience in the start-up of similar systems on major projects of similar size. The Lead Test Coordinator shall be responsible and devoted solely to managing, coordinating, and supervising all Work related to final testing, start-up, and commissioning of the facilities as described in the Specifications.

3. The Civil QC Inspector shall have a minimum of ten (10) years' experience in the type of civil Work being performed on this Project.

4. The Electrical QC Inspector shall have a minimum of ten (10) years' experience in the type of electrical Work being performed on this Project.

5. Mechanical QC Inspector shall have a minimum of ten (10) years' mechanical experience in the type of Work being performed on this Project.

6. The Certified Welding Inspector (CWI) shall have a current, certified welding inspector certificate with a minimum of ten (10) years' experience in the type of Work being performed on this Project.

7. The Coating Inspector shall have a current NACE CIP Level-3 certificate with a minimum of ten (10) years' experience in the type of Work being performed on this Project.

20.04.03. Payment

A. Full compensation for doing all Work necessary to provide quality control shall be included in the lump sum price bid for CONTRACTOR'S QUALITY CONTROL, Bid Item No. 6, if authorized by the District.

SECTION 21. PAYMENT PROCEDURES

21.01. Bid Items

21.01.01. General Requirements

A. Refer to Bid Documents Bid Form No. 1 Bid items for the listing of Bid items.

B. Unless otherwise indicated, all Bid Items include labor, Material, Equipment, and incidentals in accordance with the Drawings and Specifications to complete the Work.

C. No separate payment will be made for any Work included in the Drawings and/or Specifications but not specifically set forth in the listing of Bid items. All costs shall be included in a Bid item.

D. Where there is an overlap in the Work paid for under different Bid items, the Work will be paid for only once under the appropriate Bid item(s), as determined by the Engineer.

E. The District will retain 5% of the Milestone #1 described in Article 12.03.C.1. work and release all retention after the completion and acceptance of the Milestone #1. The 5% retention from Milestone #1 will not be carried through Milestone #2. The Contractor's attention is directed to Section 11 Contract Closeout, of these Specifications for Contract Closeout and Article 6.03. for Final Payment.

21.01.02. Description of Bid Items

A. See the following Bid item descriptions.

BASE BID

Bid Item No. 1	COMPLIANCE WITH NPDES GENERAL PERMIT
Bid Item No. 2	POTHOLE
Bid Item No. 3	MONITORING SURVEYS
Bid Item No. 4	NOISE POLLUTION AND VIBRATION MONITORING
Bid Item No. 5	MIGRATORY BIRDS
Bid Item No. 6	CONTRACTOR'S QUALITY CONTROL
Bid Item No. 7	MOBILIZATION AND DEMOBILIZATION
Bid Item No. 8	CLEARING AND GRUBBING
Bid Item No. 9	DEMOLITION AND DISPOSAL
Bid Item No. 10	CONTROL OF WATER
Bid Item No. 11	CHANNEL EXCAVATION
Bid Item No. 12	TOPSOIL
Bid Item No. 13	CHANNEL EMBANKMENT
Bid Item No. 14	ROCK PROTECTION
Bid Item No. 15	SHORING
Bid Item No. 16	EXTERIOR FLATWORK WITHIN CITY RIGHT OF WAY
Bid Item No. 17	MAINTENANCE ROAD AND MAINTENANCE ACCESS
Bid Item No. 18	SITE UTILITIES

BASE BID

Bid Item No. 19	CHAIN LINK FENCE AND GATES
Bid Item No. 20	PASSIVE FLOOD GATE
Bid Item No. 21	FLOOD WALLS
Bid Item No. 22	ARCHITECTURAL TREATMENT
Bid Item No. 23	WETLAND BROADCAST SEEDING AND PLANTING
Bid Item No. 24	ESTABLISHMENT MAINTENANCE
Bid Item No. 25	LOWER BERRYESSA CREEK TRAIL
Bid Item No. 26	CITY STORM DRAIN OUTFALL MODIFICATIONS

SUPPLEMENTAL BID

Item No. 1	ADDITIONAL TOPSOIL
Item No. 2	CONTINGENCY IRRIGATION

21.02. Progress Payments and Schedule of Values

A. This Article includes requirements for the preparation, format, and submission of the Schedule of Values.

B. Progress payments will not be made until the Schedule of Values has received favorable review by the Engineer.

C. No progress payment made to the Contractor or its sureties will constitute a waiver of the liquidated damage under Article 12.05. Liquidated Damages, of these Specifications.

21.02.01. Preparation

A. Prepare preliminary and final Schedule of Values identifying costs of all bid items. For lump sum bid items, include costs of all major components of work under that bid item. No component of lump sum bid items shall have a duration exceeding 15 days except concrete curing, submittal review, equipment fabrication, and deliveries, or a value greater than $50,000.

B. Assign prices to major components of lump sum bid items totaling the bid item price. Base prices on costs associated with scheduled activities based on the Progress Schedule for each major component of work. Each bid item and each component of lump sum bid items shall include a directly proportional amount of the Contractor's overhead and profit. The Contractor's overhead and profit shall be completely distributed among all bid items of work, including components of lump sum bid items. Provide additional cost documentation to the Engineer when requested so that values can be verified.

C. Submit the preliminary Schedule of Values within 10 days from the date of the Notice to Begin Work and revise to incorporate Engineer's comments until a final Schedule of Values is agreed upon. This information shall be used in the preparation of the Progress Schedule under Section 5 Prosecution and Progress of Work of these Specifications.

D. For all construction change order authorizations, provide change order authorization breakdown to append to the final Schedule of Values items for at least the following components: (a) site work, (b) structure, (c) mechanical, (d) demolition, (e) submittals, operation and maintenance manuals, and training; and (f) testing and startup. Provide additional cost documentation to the Engineer when requested.

E. The Contractor shall not change the final approved Schedule of Values without the approval of the Engineer. The Schedule of Values has a one-to-one direct relationship to the list of activities on the Contractor's Progress Schedule. Additions or deletions of activities on the Contractor's Progress Schedule will require an addition or deletion of line item value to the Schedule of Values. The Contractor shall submit requested changes to the approved Schedule of Values to the Engineer for approval.

F. The Contractor shall list and maintain all values for items of equipment that will be submitted for material on-site payment separately on the Schedule of Values and on the Progress Schedule. These material items will not be "progressed" as a part of the physical progress assessment.

21.02.02. Submittals

A. Submit corrected Schedule of Values within 10 days upon receipt of reviewed Schedule of Values comments, but no later than 10 days prior to anticipated submittal of the first Application for Payment.

21.02.03. Preliminary Schedule of Values

A. Table 21.02-1 below is an acceptable form for the preliminary Schedule of Values.

B. The preliminary and final Schedule of Values shall be prepared into a Microsoft Excel format onto 8½-inch by 11-inch paper. Identify the schedule with:

1. District's Name, Project Name and Project No.
2. Name and Address of Contractor.
3. Date of submission.

TABLE 21.02-1
Preliminary Schedule of Values

Item. No.	Description of Item	Value ($)
1	**Bid Item No. 1—COMPLIANCE WITH NPDES GENERAL PERMIT**	
1.1	Work Under Section	
1.2	Work Under Section	
2	**Bid Item No. 2—POTHOLE**	
2.1	Work Under Section	
2.2	Work Under Section	

Item. No.	Description of Item	Value ($)
3	**Bid Item No. 3—MONITORING SURVEYS**	
3.1	Work Under Section	
3.2	Work Under Section	
4	**Bid Item No. 4—NOISE POLLUTION AND VIBRATION MONITORING**	
4.1	Work Under Section	
4.2	Work Under Section	

21.03. Progress Payment Retention

A. The Contractor's attention should be directed to Standard Provision Article 6.02.04. Payment.

SECTION 22. CONTRACT CLOSEOUT

22.01. Project Completion and Acceptance

22.01.01. Use Before Acceptance

A. The Contractor's attention should be directed to Standard Provision Article 11.01.01. Use Before Acceptance.

22.01.02. Milestone Completion Preliminary Final Inspection

A. The Contractor shall attach the planned dates for achievement of all Milestone Completion dates as required by Standard Provisions Section 11 Contract Closeout.

B. The preliminary final inspection and final inspections shall include City of Milpitas staff to inspect items of work that are owned and maintained by the City.

22.01.03. Acceptance of Work

A. District shall accept the work in two separate Stages of Construction, Stage 1 and Stage 2. Stage 1 is the completion of Milestone #1 (civil work) and Stage 2 is the completion of all remaining Milestones. Contractor's attention is directed to Article 12.03. Contract Times.

B. After issuing the Project Completion letter for Stage 1 or Stage 2, the Engineer will recommend that the District Board of Directors formally accept the respective Stage of the Work.

C. Separate acceptance of Stage 1 or Stage 2 work will be made by the District Board of Directors in regular session and only after the Engineer has recommended acceptance of the respective Stage.

D. After the Board of Director's formal acceptance of a Stage of the work, the Clerk of the Board will record a Notice of Completion and Acceptance separately for that Stage.

E. District's acceptance establishes conformity with the Contract except for delays in completion, latent defects, fraud, or such gross errors as amount to fraud, willful misconduct, or gross negligence, and subject to any Guarantee and Warranty, express or implied. Determinations by Engineer that the work is complete or acceptance of the work by the Board of Directors does not bar any action by the District against the Contractor pursuant to Article 11.02. Guarantee and Guaranty Bond, of these Specifications. Final Payment for each Stage 1 and Stage 2 shall be per Article 6.03. Final Payment.

22.02. Guarantee and Guaranty Bond

A. Contractor shall refer to Standard Provisions Article 11.02. Guarantee and Guaranty Bond.

22.03. Training

A. No Special Requirements.

22.04. Testing and Facility Start-Up

A. Contractor shall perform a deployment test of the flood gate to demonstrate the barrier rise to 1/2 the gate height. Contractor shall coordinate with the flood gate manufacturer to determine the testing requirements, furnish all materials for the test, and implement the deployment test.

22.05. Submission of Closeout Items

A. At completion of construction and prior to issuance of the Project Completion letter by the Engineer, the Contractor shall deliver to the Engineer the closeout Documents described in Standards Provisions Section 11 Contract Closeout.

22.05.01. Record Drawings and Specifications

A. At completion of construction, and prior to the final acceptance of the work by the District, the Contractor shall deliver the following Contract record documents to the Engineer in the following form:

1. Marked-up Contract Drawings – two (2) copies for Valley Water and two (2) copies for City of Milpitas – total of four (4) copies: Bound into sets of convenient size for ease of handling.

2. Field Test Records – two (2) copies: Bound into 3-ring vinyl binders with clear plastic spine label pockets. Number all pages. Provide a complete neat, word-processed table of contents for each binder, with page numbers for each entry.

3. Field survey record documentation.

B. Accompany the final record document submittal with a transmittal letter in duplicate, containing:

1. Date.

2. Santa Clara Valley Water District and (Project Name and Project Number).

3. Contractor’s name and address.

4. Title and number of each record document.

5. Certification that each document as submitted is complete and accurate.

6. Signature of Contractor.

22.05.02. Closeout Documents

A. At completion of construction, and prior to the final acceptance of the work by the District, the Contractor shall deliver the following Closeout Documents to the Engineer:

1. Evidence of compliance with and approval of Contractor-obtained permits and associated inspections of authorities issuing the permits.

2. Copies of all special guarantees, warranties, and bonds.

3. Evidence of release of all liens and stop notices.

4. Release of claims as outlined in the Standard and Special Provisions.

B. Provide records indicating the District's receipt and acceptance of all tools, spare parts, and extra materials as specified in the Technical Provisions.

22.05.03. Keys

A. Contractor shall turn over all keys to new and existing facilities to the Engineer. This includes keys that were loaned (if any) to Contractor staff by the District for use during the construction period. Provide a written description or schedule to describe which keys correspond to which doors, gates, or other features.

22.06. Final Cleaning

22.06.01. Schedule for Final Cleaning

A. Final cleaning is separate work from the cleaning done throughout the Project to maintain the project site in a safe and presentable condition. Final cleaning shall be a comprehensive cleanup of all new and selected existing facilities begun and finished within 30 days of District's acceptance for continuous use and occupancy. Final cleaning may be performed separately by structure or area at different time periods only if approved by the Engineer.

B. Completion of this work shall be planned and scheduled to accommodate the operational requirements of this District facility.

22.06.02. Structures

A. Structures that are to be cleaned by a professional industrial janitorial service as specified in Standard Provisions Section 11 Contract Closeout include:

1. Walls (floodwalls, retaining wall, wingwalls, headwalls, etc.)

22.06.03. Streets, Roadways, Concrete Slabs, Sidewalks, and Paved Areas

A. Streets, roadways, concrete slabs, and paved areas shall be cleaned and pressure washed so that they are free of debris, soil, and paint or construction

material spills. Painted construction markings including USA markings on concrete and pavement shall be removed. All public rights of way used shall be cleaned to the satisfaction of the City of Milpitas encroachment permit conditions.

22.06.04. Storm Drainage Facilities

A. All gutters, V-ditches, swales, storm drain pipe inlets, catch basins, drop inlets, and manholes shall be cleaned of soil, vegetation, and debris.

22.06.05. Unpaved Areas

A. Unpaved areas between new facilities and between new and existing facilities shall be cleaned of all debris and construction materials. These areas shall be graded or raked to a smooth uniform surface without holes, depressions, or tire tracks.

22.06.06. Payment

A. Unless noted otherwise, full compensation for furnishing all labor, materials, tools, equipment and incidentals, and for doing all work involved in complying with all requirements under Section 22 Contract Closeout, shall be included in the lump sum price bid for MOBILIZATION AND DEMOBILIZATION, Bid Item No. 7 if authorized by the District.

TECHNICAL PROVISIONS

THIS PAGE INTENTIONALLY LEFT BLANK

TECHNICAL PROVISIONS

SECTION 23. PREPARATORY WORK

The Contractor's attention is directed to Article 16.02. Utilities, 16.03. Protection of Existing Improvements, and 16.04. Monitoring Surveys, of these Specifications.

23.01. Mobilization and Demobilization—Bid Item No. 7

23.01.01. Scope of Work

A. Mobilization shall consist of all preparatory work and operations necessary for the movement of personnel, equipment, supplies and incidentals to the project site; for the establishment of all facilities necessary for work on the project; and for all other work and operations which shall be performed as part of mobilization as specified in these Specifications, or costs incurred prior to beginning work on the various contract items on the project site.

B. The Contractor shall notify, including but not limited to emailing and personal hand delivery, to all property owners, businesses, and residents, within a 500-foot radius of the project sites, seven (7) days prior to the start of construction activities. Contractor shall provide documentation of the notification(s) to the property owners to the District. Per Article 20.01.07. Immediate Submittals, within 10 calendar days of the first chargeable day of the Contract, as specified in the Notice to Begin Work, the Contractor shall submit to the Engineer a Preliminary Progress Schedule.

C. Demobilization tasks shall consist of work and operations at the conclusion of each milestone including, but not limited to, those necessary for the removal of personnel, equipment, supplies, and incidentals from the project sites; removal of temporary facilities and access ramps; and all other work and operations that shall be performed, or costs incurred to conclude work on the various contract items on the project. As part of the demobilization operations, the Contractor shall be responsible for leaving the project sites in a clean state, free of all extraneous construction materials and impacts. This includes removal of all debris and unused materials and equipment belonging to the Contractor or used during construction from the project sites, staging and trailer areas, areas adjacent to the project sites, and access roads. All temporary access routes and haul roads constructed by the Contractor shall be re-graded to pre-construction conditions. All off-site access roads and project site entrance roads damaged by the Contractor as a result of construction activities shall be graded, wheel tracks shall be removed, and damaged sections of such roads shall be repaired by the Contractor at his/her own expense to meet or exceed their pre-construction conditions. All repairs shall be approved by and to the satisfaction of the Engineer before the end of construction.

D. Contractor shall comply with General Construction - BMP for Pathogen Control (Appendix D) for decontamination of equipment, boots, and tools before entering the job site and before returning to the job site if used on another job site.

23.01.02. Materials

A. Office facilities shall be in accordance with Article 14.03. Office Facilities, of these Specifications.

B. Project signs shall be in accordance with Article 14.02. Project Signs, of these Specifications.

C. Pollution control shall be in accordance with the following Articles in these Specifications:

- 18.03 Noise Pollution and Vibration Monitoring
- 18.04 Air Pollution
- 18.05 Spillage and Dust
- 19.01 Compliance with NPDES General Permit
- 19.04 Water Pollution Discharges
- 19.05 Regulated Material Management
- 19.06 Solid Materials Management

23.01.03. Placement

A. Office facilities shall be placed in accordance with Article 14.03. Office Facilities. Project signs shall be installed and removed as shown on the Drawings and in accordance with Article 14.02. Project Signs.

23.01.04. Testing

A. No special requirements.

23.01.05. Submittals

A. Submittals of pollution control shall be in accordance with Section 16 Work Constraints and Site Restrictions, of these Specifications.

B. Submittals for Pollution Control shall be in accordance with the Sections of these Specifications which are listed in “Materials,” above.

23.01.06. Measurement

A. Mobilization and demobilization shall not be measured.

23.01.07. Payment

A. Full compensation for furnishing all labor, materials, tools, equipment and incidentals and for doing all work required for mobilization and demobilization, as shown on the Drawings, as specified in these Specifications, including notification to the adjacent property owners, and as directed by the Engineer, shall be included in the lump sum price bid for MOBILIZATION AND DEMOBILIZATION, Bid Item No. 7, if authorized by the District. Progress

payments for mobilization will be made in accordance with the provisions of Article 9-1.16. Progress Payments, of the State Specifications.

23.02. Clearing and Grubbing—Bid Item No. 8

23.02.01. Scope of Work

A. Clearing and grubbing shall be performed in advance of earthwork and in accordance with requirements in these Specifications.

B. Clearing and grubbing shall consist of clearing and grubbing activities, including, but not limited to, designated trees and shrubs including roots, tree branches and stumps, brush, shrubs, reeds, weeds, roots and stems of giant reed (*Arrundo donax*), scrap wood and metal, debris, rocks, concrete rubble, buried man-made objects and concrete blocks, sediments, and all objectionable materials from the work site, including objects, furnishings and materials left by homeless encampments. The Contractor shall make arrangements with local recyclers, within Santa Clara County, to recycle the material removed during clearing and grubbing. Local recyclers may be found on the internet at www.recyclestuff.org.

C. Topsoil grubbing shall be limited to a depth of four (4) inches to preserve underlying high quality topsoil for salvage and reuse. Topsoil grubbing shall not be conducted at the locations shown on the Drawings where existing native plants are to be salvaged for temporary storage, maintenance and later replanting in the new revegetation bench.

D. Clearing and grubbing work shall be in accordance with the provisions of Section 17-2 Clearing and Grubbing, of the State Specifications, except as modified herein. The Contractor shall limit the extent of channel clearing and grubbing activities each year to only the portion of the creek where flood protection improvements will be completed by October 15th of each calendar year. The project area shall be cleared and grubbed only to the area necessary to accommodate the work, and in conformance with the notes and details shown on the Drawings.

E. The Contractor shall provide an on-site arborist during clearing and grubbing. The on-site arborist will be authorized to give direction to the Contractor to prevent unnecessary damage to the health of private trees or their roots, substrate, trunk, limbs, or foliage and to remedy any damage done to the same. The arborist shall be certified by the American Society of Consulting Arborists (ASCA) with a specialty of “Tree Protection for Construction Projects.” Work shall not proceed without the presence of this arborist unless approved by the Engineer.

F. Tree removal shall include all trees within the project area as shown on the Drawings to be removed. However, it is the responsibility of the Contractor to visit the site and ascertain the location and nature of all trees which are to be removed as part of this Scope of Work, whether shown on the Drawings or not.

The Contractor shall give the Engineer a minimum one week notice before any trees shall be removed.

G. The channel improvements will be constructed in very close proximity to backyard shrubs, trees, and improvements. The Contractor shall take extreme measures not to damage these items unless shown on the Drawings to be removed or approved by the Engineer. The Contractor's attention is directed to Article 16.02. Utilities, 16.03. Protection of Existing Improvements, and 16.04. Monitoring Surveys, of these Specifications. No tree or growth shall be trimmed back without written approval of the Engineer, including plants, trees, and shrubs growing near the right of way, which overhang onto the work site. Such overhanging foliage shall be protected and tied back if necessary. Landscaped areas and irrigation systems outside of the construction areas shall be preserved and protected from damage by the Contractor's operation.

H. Tree protection shall be provided for any existing tree to remain that is located outside of the construction area, and has a canopy that overhangs the construction fence into the construction area. The general contractor shall hire laborers whose specific job it will be to carry out the tree protection work, including, but not limited to, installing tree protection fencing, obtaining and spreading mulch, watering trees, etc.

There are a number of trees that are shown on the Drawings to be protected in place, such as the stand of River She-Oak trees adjacent to Jacklin Court. The following mitigation measures shall be implemented by the Contractor and the Contractor's arborist prior to work adjacent to the trees:

1. The Contractor shall coordinate a site meeting between the Contractor's arborist, the District's arborist, and prior to clearing and grubbing to discuss tree protection measures and specific tree resources.

2. All excavation work adjacent to trees being retained in project area shall be done in accordance with the ANSI A300 "Root Management" standards. Removing 25% or more of the root area on an individual tree in a single season is a significant impact and shall be avoided. Any grading, construction, demolition, or excavation work that may encounter live tree roots (from trees scheduled for retention in project area) shall be monitored by the Contractor's arborist. Compaction of undisturbed site soils of the root area shall be avoided. *Fencing*—Install tree protection fencing before any demolition or construction begins to any trees to remain within or just outside the construction limits. The area inside the fencing is termed the TPZ (Tree Protection Zone). The TPZ shall be clearly marked and defined in the field using fencing or similar access deterrent. No grading, compaction, excavation, soil storage, equipment storage, hazardous material storage, removal of understory vegetation, or equipment operation shall be conducted in the TPZ. A 6-inch layer of wood chips or plywood sheets shall be added to the TPZ to reduce ground pressure from foot traffic and other necessary construction activities. The TPZ shall be 5x diameter of the trunk. Where excavation

for wall footing construction extends into the TPZ, place the fence at one (1) foot outside of the excavation limit. Limit excavation in tree protection zone using shoring or any other means necessary. In all cases place the fence as far from the protected tree's trunk as possible, in order to provide the maximum amount of protected space for each tree. The arborist shall meet on site with the general contractor and fencing contractor prior to demo to agree upon fence placement. The fencing shall not be taken down or moved without the arborist's permission.

3. *Material and Installation*—The fence shall be orange plastic fencing per Article 80 of the State Specifications with steel posts driven a minimum 18" into the ground so they cannot be easily moved. An 18"-24" wide gap shall be left in the fencing (bordered by posts on each side) to allow access for tree work and monitoring. If it is not possible to fence off a particular tree, then the trunk of the tree shall be wrapped with 2" x 6-12" vertically stacked lumber from the ground up, with a gap of 1 to 2 inches between the boards, fastened to the tree with a rope or metal straps at the top, bottom and middle. The lumber is then wrapped with orange plastic snow fence from the ground level up to the lowest accessible branches.

4. *Underground Utilities*—Utilities that will pass within a tree protection zone shall be reviewed by the project arborist to prescribe any mitigation procedures that will reduce damage to trees such as tunneling below or between existing roots to remain, hand digging or a combination of such methods. If utilities must pass through tree protection zones, the arborist shall be on site to supervise this work and assist in dealing with the roots.

5. *Irrigation*—Make sure that any trees that will be near construction or demo disturbance are well hydrated before any demo or construction begins. Irrigate the trees if necessary below the surface. This will help the trees go into the project strong and not drought-stressed, so they will be better able to weather any damage they may experience. The frequency and amount of water will depend upon the weather, the damage of the tree, and the soil moisture status. The project arborist can provide directions for irrigation depending on the tree condition just prior to construction. Installation of a temporary irrigation system to keep the roots of adjacent trees moist is strongly recommended. Roots exposed by excavation or trenching should be protected from sunlight and desiccation if exposed for more than a few days, particularly during periods of hot weather. Temporary irrigation systems and wet burlap can be installed to protect exposed roots where feasible.

6. *Mulching*—Trees to be removed should be chipped on site. The chips shall become the property of the Contractor and shall either be disposed offsite or may be stored in an area designated by the site Engineer. These chips may be used as mulch for trees to remain on adjacent properties with property owner's permission. The Contractor's arborist will determine which trees shall receive mulch. If mulch is required for

trees, it shall be spread per the Contractor's arborist's recommendations. No diseased trees shall be used for mulch.

7. The stand of River She-Oak trees adjacent to Jacklin Court shall be monitored for at least one (1) year after the floodwall work is completed. Monitoring shall be conducted by the Contractor's arborist and include at least one assessment period during the active growing season (typically March-October). Monitoring should include an assessment of overall tree health, functionality of temporary irrigation system, and analysis of previous photos of the stand of trees for comparison. Trees that show signs of decline after the project shall be pruned or removed to minimize potential public safety concerns from dead or dying trees.

I. All existing trees on adjacent properties, not approved for removal, which require root or limb pruning for construction clearance or to correct accidental damage which occurred during construction shall be pruned, by an ISA- or ASCA-certified Arborist or ISA-certified Tree Worker, in accordance with the 'Best Management Practices for Pruning [ISA 2008] and the most recent editions of the American National Standard for Tree Care Operations [(ANSI) A300] and for Arboricultural Operations [(ANSI) Z133.1]," only as necessary and only with the approval of the Engineer. Pruning of limbs and roots should be minimized and conducted during cool, dry weather outside the active growing season when feasible. Access needs and equipment clearance should be determined well in advance of construction to help schedule required pruning work at a time that is least detrimental to the tree species involved. Pruning of more than 25% of an individual tree's canopy or crown in a single season must be avoided. Removal of live limbs greater than 4 inches in diameter should be avoided if possible or receive prior approval by the Contractor's arborist.

J. No stubs or splits or torn branches shall be left; clean cuts shall be made outside the branch bark ridges or collar. Flush cuts shall not be made. Spikes shall not be used for climbing live trees to remain. If any roots from a tree to remain are exposed during work, they shall be covered immediately with a double layer of wet burlap anchored to the soil and rewetted daily or more often to prevent root desiccation.

K. When larger roots (>2-inch diameter) are encountered during construction, excavations should only continue by hand or with smaller, hand-held tools (e.g. air spade) until sufficient root area has been exposed to cut it cleanly with a sharp instrument (e.g. pruning saw, cut-off saw, loppers) to remove the portion overlapping the construction area. Large root pruning should be conducted by the Contractor's arborist.

L. If feasible, root pruning along the outside edge of a trench or other excavation should be conducted prior to construction utilizing a combination of small equipment (i.e. trencher, small backhoe, cut-off saw) and hand tools. This "pre-pruning" gives the trees a chance to adapt to root loss prior to construction and develop new feeder roots that aid in water absorption.

M. All tools used for pruning of tree roots or limbs should be kept sharp and regularly disinfected to discourage the spread of plant pathogens.

N. The Contractor shall immediately notify the Engineer and the Contractor's arborist if any tree is damaged above or below ground. If the Engineer deems the damage could have been avoided and is due to Contractor negligence, a penalty amount shall be deducted from the Contractor's payment. The penalty amount shall be set at the Engineer's discretion and shall range from $500 minimum for creating a small trunk or limb wound to a maximum of the value of the entire tree as determined by the formula below if the damage shall, in the opinion of the Engineer, cause the tree to fail within the next five (5) years. If the damage is such that tree removal is necessary in the opinion of the Engineer, the Contractor shall remove the tree at the Contractor's own expense and forfeit from payment an amount equal to the value of the tree as calculated below.

Trunk Diameter (D) of Tree Wounded or Broken or Removed	Charge to Contractor for Each Tree Wounded or Broken or Removed
Up to 6 inches	$500
From 6 to 12 inches	$1,500
From 12 to 18 inches	$5,000
Greater than 18 inches	Use formula: Charges, $ = 100 x 5D, *Where "D" equals the trunk diameter, in inches, measured at 4.5 feet above the base of the tree.*

O. Existing facilities which are to remain in place shall be protected in accordance with the provisions of Section 4 Legal Relations and Responsibility of these Specifications.

P. Where existing ground/original grade is within 2'0" from the bottom of proposed concrete structures, Contractor shall scarify the top 12 inches of existing grade and compact to 92% relative compaction.

23.02.02. Materials

A. Backfill for over-excavated areas resulted from the removal of concrete rubble, sacked concrete, buried man-made objects or concrete blocks shall conform to Article 24.01.03. Channel Embankment.

23.02.03. Placement

A. All existing joint poles, overhead utility lines, fences or other improvements not specifically designated on the Drawings to be removed or relocated shall remain in their original condition and location undisturbed. However, upon written permission by the Engineer, fences and other existing improvements may, for the convenience of, and at the expense of the Contractor, be removed and

temporarily relocated during construction and shall be replaced in their original location in as good or better condition as when the Contractor entered upon the work site.

B. All areas that have been over-excavated during the removal of buried concrete rubble, buried man-made objects or concrete blocks shall be backfilled with suitable material in accordance with Article 24.01.03. Channel Embankment, of these Specifications, at the Contractor's own expense.

C. All cleared and grubbed materials which cannot be recycled locally, shall be removed from the project site and legally disposed of outside of the right of way in an area provided by the Contractor at the Contractor's expense and at no additional cost to the District.

23.02.04. Testing

A. Material quality tests for backfill of over-excavated areas shall conform to Article 24.01.03.02. Materials.

23.02.05. Submittals

A. The Contractor shall submit for the Engineer's approval a "Statement of Qualifications" for each arborist and tree worker, showing their education, work history, number of years certified, as well as proof of current license in an appropriate category (consulting arborist, arborist, tree worker) and professional association (ISA or ASCA).

B. Prior to beginning any clearing and grubbing work, Contractor shall submit a plan that depicts the proposed limits and phasing of the clearing and grubbing.

C. Contractor shall submit material quality tests for backfill for over-excavated areas in advance of its use on the project.

23.02.06. Measurement

A. The quantities of clearing and grubbing will not be measured.

23.02.07. Payment

A. Full compensation for furnishing all labor, materials, tools, equipment and incidentals, and for doing all work required to clear and grub work areas per this Article and as shown on the Drawings, as specified in these Specifications, and as directed by the Engineer, shall be included in the lump sum price bid for CLEARING AND GRUBBING, Bid Item No. 8, if authorized by the District.

B. Full compensation for stripping fill areas as shown on the Drawings as specified in the Specifications, and as directed by the Engineer, shall be considered as included in the price bid per cubic yard for CHANNEL EXCAVATION, Bid Item

No. 11, if authorized by the District, and no separate payment will be made therefor.

C. Full compensation for backfill material, compaction, and testing of depressions due to clearing and grubbing shall be considered as included in the price per cubic yard for CHANNEL EMBANKMENT, Bid Item No. 13, if authorized by the District, and no separate payment will be made therefor.

23.03. Demolition and Disposal—Bid Item No. 9

23.03.01. Fence and Gate Removal

23.03.01.01. Scope of Work

A. Removal and disposal of Chain link (CL) fence, gates, and access gates shall consist of the removal and disposal of existing fencing, gates, and access gates, which interfere with the construction required under this Contract as shown on the Drawings, as specified in these Specifications, and as directed by the Engineer.

23.03.01.02. Materials

A. Existing fences, gates, and posts to be removed shall become the property of the Contractor and shall be removed from the site at no additional cost to the District.

23.03.01.03. Placement

A. Contractor shall remove existing fences, posts, gates, and access gates, shown on the Drawings to be removed, from the project site as directed by the Engineer.

B. Contractor's removal of existing fences shall be done in a manner that maintains the privacy and security of private property.

C. Contractor shall remove existing fences and gates, shown on the Drawings to be removed, from the project site as directed by the Engineer. Contractor's attention is directed to Article 4.10. Preservation of Property, of these Specifications.

23.03.01.04. Testing

A. Testing is not required.

23.03.01.05. Submittal

A. The removal and disposal of existing fences, posts, gates, and access gates shall be included in the "demolition plan" required in Article 23.03.02.05. Submittal, of these Specifications. Said plan shall be submitted by the Contractor and approved by the Engineer prior to the commencement of any work related to removal and disposal of existing fences and gates.

23.03.01.06. Measurement

A. Quantities for fence and gate removal will not be measured.

23.03.01.07. Payment

A. Full compensation for furnishing all labor, materials, tools, equipment and incidentals and for doing all work involved in chain link fence and gate removal and disposal as shown on the Drawings, as specified in these Specifications, and as directed by the Engineer, shall be considered as included in the lump price bid for DEMOLITION AND DISPOSAL, Bid Item No. 9, if authorized by the District.

23.03.02. Site Demolition and Disposal

23.03.02.01. Scope of Work

A. Site demolition shall consist of all work including, but not limited to, existing concrete removal, existing concrete structures removal, existing channel lining removal, existing utilities removal (i.e., irrigation, above ground and underground conduits and pipes, abandoned underground utilities, including existing 4-in water line), existing asphalt concrete removal, existing sacked concrete removal; existing rock slope protection removal; identified concrete sidewalk and curb and gutters as shown on the Plans; and demolition, disposal of existing utilities.

B. The Contractor shall be responsible for reestablishing finish grade to conform to existing grades. The Contractor shall furnish all labor, material, and equipment necessary to provide all work, complete in place, specified herein, and as indicated on the Drawings. Demolition work shall be completed as shown on the Drawings, as specified in these Specifications, and as directed by the Engineer.

C. All site demolition limits shall be field marked by the Contractor for approval by the Engineer before the start of removal operations.

D. Concrete removal shall conform to the provisions of Section 15-1.03B, Removing Concrete, of the State Standard Specifications except as modified herein. Shoring shall conform to Article 24.11. of these Specifications. The Contractor's attention is also directed to Article 19.06. Solid Materials Management, of these Specifications.

E. The District sampled and tested existing concrete structures for asbestos containing materials at the project site. A copy of this report can be found on the District's Construction Administration webpage: https://www.valleywater.org/construction.

23.03.02.02. Materials

A. No special requirements.

23.03.02.03. Placement

A. Concrete removal shall conform to this section of these Specifications and the provisions of Section 15-1.03B Removing Concrete, of the State Specifications, except as modified herein.

B. Removed concrete shall be disposed of off from the project limits to a concrete recycle facility, meeting all federal, state, local regulations, and approved by the Engineer. Demolished concrete shall not be buried in structure backfill, embankment fill or trench backfill. Concrete generated from the concrete removal shall not be mixed or stockpiled.

C. Pavement within the right of way shall be removed and disposed of at a recycling facility. Miscellaneous items, wheel stops, curbs, base rock, etc., shall be legally disposed of off the right of way at a location provided by the contractor. The disposal location shall meet all federal, state, and local regulations and be approved by the Engineer.

D. Sidewalk work done on both sides of the street cannot be done simultaneously. One side shall remain open to pedestrians.

E. During sidewalk construction, alternative pedestrian access or 1 week advance notice of sidewalk closure shall be provided unless otherwise noted by City of Milpitas traffic control requirements.

F. Channel excavation and backfill shall conform to provisions of Section 24 Earthwork, of these Specifications, except for payment.

G. Attention is directed to Article 16.02. Utilities, for work adjacent to or relocation of existing utilities.

H. The Contractor is directed to Article 19.06.02. Construction and Demolition Waste Management, with regards to properly recycling solid waste materials removed from the project limits.

23.03.02.04. Testing

A. No special requirements.

23.03.02.05. Submittals

A. Contractor shall prepare and submit a demolition plan to the Engineer for review and approval. The Contractor is directed to Article 19.06.02. Construction and Demolition Waste Management, regarding submitting a Solid Materials Management Plan annually by the 25th of January, and a Solid Materials Management Report Form, that includes receipts that verify materials and quantities disposed and recycled.

23.03.02.06. Measurement

A. Site demolition items will not be measured.

B. Record Drawings of the existing facilities are not available. The Contractor is responsible for familiarizing himself/herself with the actual field conditions. The District cannot guarantee that these facilities are constructed to the dimensions shown on the plans, nor that all such facilities are actually shown on the plan. No additional payment or deductions will be made for differences in dimensions, number, or type of facilities shown on the plans and the actual field conditions. The Contractor is responsible for familiarizing himself/herself with the actual field conditions.

23.03.02.07. Payment

A. Full compensation for furnishing all labor, materials, tools, equipment, and incidentals, and for doing all work required for site demolition and disposal and well abandonment and removal, as shown on the Drawings, as directed by the Engineer, and as specified in these Specifications, shall be included in the lump sum price bid for DEMOLITION AND DISPOSAL, Bid Item No. 9, if authorized by the District.

23.03.03. Well Abandon and Removal

23.03.03.01. Scope of Work

A. The Contractor shall abandon and remove all existing monitoring wells shown on the Drawings. The Contractor shall also inform the Engineer within 24 hours of any existing well(s) encountered or not shown on the Drawings but located within the project construction limits. All wells within the project construction limits shall be abandoned and removed at the direction of the Engineer and in accordance with the SCVWD Ordinance No. 90-1, the California Well Standards Bulletin 74-90, and the “Standards for the Construction and Destruction of Wells and Other Deep Excavation in Santa Clara County” published by the District. These documents can be obtained from the Santa Clara Valley Water District, 5750 Almaden Expressway, San Jose, CA 95118 (phone number (408) 265-2600).

B. No person shall undertake to dig, bore, drill, deepen, refurbish, or abandon and remove an existing water well, cathodic protection well, observation well, monitoring well, or any other excavation that intersects groundwater aquifers without first obtaining a permit from the Santa Clara Valley Water District (District) , Wells and Water Measurement Unit. To obtain a permit, the following requirements must be met:

1. No person shall undertake to dig, bore, drill deepen, refurbish, or abandon and remove an existing water well, cathodic protection well, observation well, or monitoring well, unless he or she possesses a C-57 water well contractor's license issued by the State of California.

2. The well driller shall be identified on the permit application. The permit application shall be prepared and signed by a State of California Certified Engineering Geologist or a Civil Engineer who is registered by the State of California. The signature and registration number shall be included in the permit application.

3. As a condition of the construction permit, any abandoned or unused wells on the property shall be abandoned and removed in accordance with District's Well Standards, the California Well Standards Bulletin 74-90.

4. The well drillers shall also comply with the provision of all other related government codes and standards.

5. Special requirements and inspection requirements will be stipulated in the permit.

6. The Contractor shall contact the District's inspection section 72 hours prior to the placement of the sealing material to schedule an inspection of a well destruction.

C. As shown on the Drawings, the following monitoring wells are within the Project area and shall be destroyed:

MONITORING WELLS TO BE ABANDONED AND REMOVED

Well Number	Well Type
MW-1	Monitoring
MW-2	Monitoring
MW-3	Monitoring

23.03.03.02. Water Supply Wells (Not Used)

23.03.03.03. Monitoring Wells

A. To abandon and remove a water supply well, the licensing requirements are as follows:

1. A permit from District; and
2. A C-57 water well contractor's license issued by the State of California.

B. To abandon monitoring wells, the Contractor shall comply with the Special Sealing Standards for Shallow Monitoring Wells (included in the "Standards for the Construction and Destruction of Wells and Other Deep Excavation in Santa Clara County"). The Contractor shall obtain a well destruction permit from the

District and arrange for inspection of the abandon and removal activities. A well shall be abandoned and removed by the following method:

1. The well shall be pressure-grouted in place by filling the entire casing with approved sealing material and applying a minimum of 25 pounds per square inch of pressure for at least five minutes or until at least an additional 33 percent of the casing's volume of sealing material is pumped into the well.

2. Boring logs of the monitoring wells MW-1, MW-2, and MW-3 can be found in the Drawings and "Groundwater Monitoring Well Memo – Lower Calera Creek Flood Protection Project" by Cal Engineering & Geology dated January 22, 2019.

23.03.03.04. Additional Requirements

A. The overall technical responsibility for performance, interpretation, and well permit preparation shall be provided by a State of California Certified Engineering Geologist or a Civil Engineer who is registered by the State of California. The signature and registration number shall be included in the permit application.

23.03.03.05. Material and Procedures

A. Before the well is filled, it shall be investigated to determine its condition, details of construction, and whether or not there are obstructions that will interfere with the process of sealing.

1. Prior to sealing, all debris, silt, monitoring well covers, utility boxes, and pumping hardware shall be removed from the well.

2. If there are any obstructions, they shall be removed, if possible, by cleaning out the hole. If the obstruction is in the form of hardware (rather than fill or cave material) and cannot be removed, a tremie pipe will have to pass beneath the obstruction in order to place sealing materials below the obstruction, eventually leaving the obstruction sealed in the well.

3. Where necessary, to insure that sealing material fills not only the well casing, but also any annular space or nearby voids, appropriate depths of the casing shall be perforated or otherwise punctured.

4. In drilled wells that have no conductor pipe installed, or a gravel-packed well without a surface seal, it may be necessary to remove some of the upper part of the casing. However, in some cases this can be done only as the well is filled. In dug wells, as much of the lining as possible shall be removed prior to filling.

5. For protection of the seal at the land surface, and to facilitate the future use of the well site, a hole at least one foot larger in diameter than the original drilled hole shall be excavated around the outside of the well

casing to a depth of 5 feet below the ground surface. The well casing is then to be cut off 6 inches above the bottom of this excavation and removed. During the sealing operation, the sealing material used to fill the well shall be allowed to spill over into the excavation and filled for a thickness of at least one (1) foot to form a cap, which has a diameter of at least one foot greater than the diameter of the original drilled hole. This procedure shall result in the exposed edge of the casing covered with six (6) inches of sealing material. After the sealing material has set, the excavation is to be filled with compacted native soil.

6. In cases where the site is developed and/or a 5-foot deep excavation around the well is not practical, a minimal excavation which allows the sealing material to form a cap at least one (1) foot thick with enough additional space to allow for adequate surfacing, may be used.

23.03.03.06. Placement of Materials

A. The following requirements shall be observed in placing material in wells to be destroyed:

1. The well shall be completely filled with sealing material from the true bottom of the well up. Placement shall be by methods that prevent free fall, dilution, or separation of material.

2. If a District water meter is present, the Contractor shall remove and return it to the District.

3. For monitoring wells, a tremie pipe is not required if there is less than three feet of water in casing or the casing diameter is less than three inches.

4. Neat cement, cement grout, or concrete, shall be placed in the well from the true bottom of the well up to the surface. Concrete must not be used where tremie pipe and/or pressure grouting is required; concrete should only be used for shallow, dry holes. In rotary-drilled wells or gravel-packed wells, the seal is to be placed in the gravel pack through new perforations in order to prevent interaquifer flow either through the well or around the outside of the casing.

5. Where the head (pressure) producing flow is great, special care and special methods must be used to restrict the flow while placing the sealing material. In such cases, the casing must be perforated opposite the area to be sealed, and the sealing material forced out under pressure into the surrounding formation.

6. If there is an annular space (gravel-packed wells) or a space between the drilled hole and the well casing, the well is to be perforated at appropriate depths, or the casing is to be removed before sealing. The size and spacing of the perforations shall provide sufficient openings through

which grout can pass. A grouting (tremie) pipe shall be placed inside the well casing and the well filled from the bottom of the well up to the surface. The perforated portion shall be filled by a pressure-grouting method until refusal. This procedure is to apply also the annular space between a conductor pipe and well casing. If an annular space exists between the drilled hole and the conductor pipe, it shall also be sealed. If the annular space is restricted, the grouting (tremie) pipe may be jetted in place.

7. If the annular space of a well has previously been sealed with an appropriate sealing material, the seal need not be disturbed. However, if possible, the seal is to be inspected to ensure that it conforms to the standards presented in this report. If the seal does not meet standards presented in this report, the annular steel should be extended downward and the well filled with Portland cement grout.

8. To assure that the well is filled and that there has been no jamming or “bridging” of the sealing material.

9. The sealing material shall be allowed to spill over into the excavation to form a cap at least one (1) foot thick.

10. All waste generated during destruction activities must be properly managed; this includes, but is not limited to, all waters generated during debris removal or seal placement.

11. After the well has been properly filled, including sufficient time for sealing material in the excavation to set, the excavation shall be backfilled with native soil.

12. Following well destruction activities, all surface completion features (well vault boxes, pump pads, etc.) shall be completely removed and the site shall be brought into a similar condition as the surrounding area.

23.03.03.07. Sealing Materials

A. Pressure grouting shall be completed using 21-sack neat cement grout. No aggregate based sealing materials or bentonite may be used.

B. Water supply wells shall be backfilled with 21-sack neat cement grout or 10-sack sand cement grout, depending on the well’s original construction, and shall be approved by the Engineer.

23.03.03.08. Temporary Cover

A. During periods when no work is being done on the well, such as overnight, or while waiting for sealing material to set, the well and surrounding excavation, if any, shall be covered. The cover shall be sufficiently strong and anchored well enough to prevent the introduction of foreign potentially hazardous situation.

23.03.03.09. Abandoned Cathodic Protection Wells

A. Abandoned cathodic protection wells and uncased and cased test holes deep enough to cause interaquifer movement of groundwater shall be sealed in the same manner as other abandoned wells.

23.03.03.10. Payment

A. Full compensation for doing all work and furnishing all materials necessary for "Well Abandon and Removal," as shown on the Drawings and as specified in the Specifications shall be included in the lump sum price bid for DEMOLITION AND DISPOSAL, Bid Item No. 9, if authorized by the District.

23.04. Removal, Salvage, Relocation of Existing Features

A. All materials to be removed, salvaged, and relocated by the Contractor will be handled and removed with care and reused in accordance with these Specifications and as shown on the Drawings.

B. The following items shall be salvaged, reinstalled, or relocated:

1. An existing warning paddle and a wooden post with warning signs off of Hanson Court and signs fastened on the existing chain link gates of North Milpitas Boulevard and Arizona Avenue shall be salvaged and reinstalled as shown on the Drawings.

23.04.01. Payment

A. Full compensation for doing all work and furnishing all materials necessary for removal, salvage, relocation of existing features as shown on the Drawings and as specified in the Specifications shall be included in the lump sum price bid for MOBILIZATION AND DEMOBILIZATION, Bid Item No. 7, if authorized by the District.

23.05. Control of Water—Bid Item No. 10

23.05.01. Control of Water Within Existing Course

23.05.01.01. Scope of Work

A. Control of Water will consist of doing all work and furnishing all labor, materials, and equipment required to design, construct, operate, and maintain measures to control water within the creek and groundwater until Project Completion. The Contractor shall note that periodic discharges from surface groundwater, subsurface groundwater, tidal changes, rainfall, blow-offs, storm drain discharges, and other discharges upstream can be expected any time of the year. It is the Contractor's responsibility to size the water control facilities/equipment such as to accommodate all flows/discharges, regardless of their source or the time of year in which they are experienced. Contractor shall

provide non-erodible spillways at dewatering diversion dams and a minimum creek channel cross-sectional area at all times to accommodate potential water in excess of dewatering system capacity caused by storm events during the construction season. Attention is directed to Article 17.01. Safety, of these Specifications.

B. The construction site shall be kept free of standing water or excessively muddy conditions for proper execution of the construction work. The Contractor's attention is directed to the Final Lake and Streambed Alteration Agreement (CDFW) in Appendix C, Measure 2.3: "Work shall be performed in isolation from the flowing stream. The entire stream flow shall be diverted around the project work area using water-tight coffer dams and piping."

C. The Contractor shall develop a plan to control groundwater and water within the creek. The plan shall be designed by a registered professional engineer in California and be submitted to the Engineer and favorably reviewed prior to implementation. Implementation of an effective dewatering program shall be the Contractor's responsibility. The dewatering plan shall be in accordance with *Dewatering Plan Construction within Lower Berryessa Creek Channel*, dated June 14, 2014 that was prepared by the District. The Contractor shall install a dewatering system that will maintain and monitor the groundwater level at a minimum of 2 feet below the bottom of the excavation at all times.

D. All dewatering systems shall be properly designed to prevent pumping soil fines with the discharge water that would exceed the allowable limits set in Articles 19.01.04.A.1.b.2 Risk Level 2 Requirements and 19.04.A.1 Water Pollution Discharges of these Specifications. The Contractor shall sample and test the groundwater for soil fines content from wells, as needed. If turbidity limits are exceeded due to pumping soil fines, the Contractor shall revise his dewatering operations. The Contractor shall provide discharge sampling locations for each pump. Prior to excavation, the Contractor shall install observation wells at frequent locations along the alignment, to verify and demonstrate to the District that the required drawdown to a minimum of 2 feet below the excavation has been attained. Contractor is encouraged to perform Contractor's own investigation, test program, etc. prior to construction in order to satisfy Contractor's design requirements for an effective dewatering program.

E. If groundwater pumping is necessary, Contractor shall comply with the federal, state, and local regulations for disposal of the groundwater.

F. The Contractor's attention is directed to Article 19.01. Compliance with NPDES General Permit, of these Specifications, and Appendix C of these Specifications regarding the requirements of the California Department of Fish and Wildlife (CDFW) and San Francisco Bay RWQCB.

G. All water diversion devices and equipment shall be removed from the channel by October 15 of each year. All water diversion devices and equipment shall not be placed until either May 1 of each year if upstream of North Milpitas Boulevard or June 15 of each year if downstream of North Milpitas Boulevard. No exceptions.

District shall assess liquidated damages per Article 12.05.A.5 for Contractor's failure to comply. The Contractor's attention is directed to Article 23.05.02. Temporary Water Diversion, for requirements of control of water within the creek. The Contractor's attention is directed to the Final Lake or Streambed Alteration Agreement (CDFW) in Appendix C, Measure 2.3: "Upon removal of the water diversion system, flows shall be gradually restored to the channel in a manner that avoids an erosive surge of water."

H. The contractor shall not discharge to the City of Milpitas sewer system without prior approval and permits, if necessary, from City of Milpitas.

I. The geotechnical report by Cal Engineering & Geology noted that the historic high groundwater at the site is within the upper 10 feet and can vary throughout the year. The report also provides groundwater information from monitoring wells at several locations throughout the project site. The Contractor shall make themselves aware of this groundwater information and use this information as part of the development of their Control of Water Plan.

J. No equipment or vehicles may operate in the creek channel (with the channel limit defined as top of bank or hinge point of levee whichever is farthest from the channel centerline) unless it is dewatered per the regulatory permit conditions in Appendix C of the 401 Water Quality Certification (RWQCB) Condition 4 and the Final Lake or Streambed Alteration Agreement (CDFW) Avoidance and Mitigation Measure 2.4: "Equipment shall not be operated in wetted areas, including but not limited to ponded, flowing, or wetland areas, or within the live stream channel below the level of top-of-bank."

K. The Contractor shall conduct pilot holes down to the elevation of the structural excavation for every 500 feet of flood wall to determine the groundwater conditions. Groundwater information from these pilot holes shall be included as part of the Control of Water Plan.

23.05.01.02. Materials

A. The Contractor shall make arrangements for furnishing all water required in connection with the work, including, but not limited to, water for dust control and compaction operations. The Contractor shall not use water from Lower Calera Creek for this purpose at any time during construction.

B. Water shall be from a recycled water source. Water from Lower Calera Creek shall not be used in the hydroseed mixture. Contractor shall apply for a construction recycled water mater at the Milpitas City Hall (455 East Calaveras Boulevard) prior to start of work. Construction potable water will only be made available if it can be demonstrated that recycled water cannot be used for construction activities. The same rental process as for construction recycled water will apply.

23.05.01.03. Submittals

A. Submit a Control of Water Plan, including groundwater information from the pilot holes for every 500 feet of floodwall, control of groundwater during excavation, and water in the creek. The plan shall be prepared and signed by a Registered Civil Engineer in the State of California. The plan shall be favorably reviewed by the Engineer prior to implementation.

B. The control of water (including temporary diversions) and sediment control facilities shall be described in the Contractor's SWPPP.

23.05.01.04. Measurement

A. Control of water will not be measured.

23.05.01.05. Payment

A. Full compensation for furnishing all labor, materials, tools, equipment and incidentals, and for doing all work required for Control of Water, as specified in these Specifications, and as directed by the Engineer, shall be considered as included in the lump sum price bid for CONTROL OF WATER, Bid Item No. 10, if authorized by the District.

23.05.02. Temporary Water Diversion

23.05.02.01. Scope of Work

A. Temporary water diversion work shall consist of furnishing, constructing, maintaining, and later removing temporary water diversion system and dewatering for excavations and other associated construction activities.

B. Temporary water diversions shall be capable of sustaining the anticipated natural flow of the creek and tidal flows. Summertime low flows along Lower Calera Creek are estimated to be 10 cubic feet per second (plus/minus), but higher flows have been experienced. These creek flow estimates only apply to the normal construction season (work period) from May 1 to October 15; the Contractor shall not rely on these estimates outside of these dates. If temporary water diversion is necessary outside of the work period, which can only be approved by CDFW and the RWQCB, the temporary water diversion shall be redesigned and reconstructed to account for higher winter flows. The Contractor shall be responsible for verifying and accounting for the upstream flows that will enter the project site throughout the construction duration, to determine and design the size, type, and method to be used for the temporary water diversion system. Contractor shall also plan to have a backup plan if the proposed water diversion system fails. The Contractor's Control of Water Plan shall be submitted to the Engineer and favorably reviewed prior to implementation of any temporary water diversion, refer to Article 23.05.01.03.A. Submittals.

C. All water shall be discharged in a non-erosive manner. Discharge method shall be sufficient to prevent erosion, minimize turbidity, and conform to the requirements contained within this Section, and may include the following:

1. Check dams

D. Sumps or basins may also be used to collect water, where appropriate (e.g., in channels with low flows).

E. Where feasible and appropriate, diversion structures constructed of river-run gravel with less than 15% fines (per CDFW Permit) shall be installed on concrete sections of the channels. If cofferdams are used, they shall be installed within a hundred feet upstream and/or downstream from the extent of the work area.

F. In conjunction with diversion structures, pumps or gravity-fed pipe systems may be used to dewater sites. Whenever pumps and generators are used in the temporary water diversion system, such equipment shall be maintained according to manufacturers' specifications to regulate flows to prevent dry-back or washout conditions. Pumps shall be operated and monitored to prevent low water conditions, which could pump muddy bottom water, or high water conditions, which creates ponding. Pump intakes shall be provided with screening materials so as to prevent uptake of fish and other vertebrates. Follow CDFW guidelines including screening and approach velocity criteria when using pumps.

G. If bypass pipes are to be used, larger pipes shall be used to provide better flows in order to prevent increases in temperature and decreases in dissolved oxygen (DO).

H. All temporary diversion structures and related facilities shall be removed within 48 hours of completion of work at each zone. Flows shall be restored in a manner that minimizes erosion.

I. When temporary diversion structures and other related facilities are removed, the ponded flows will be directed into the low-flow channel within the work site to minimize downstream water quality impacts.

J. Flows shall gradually be restored to the channel to avoid a surge of water that would cause erosion or scouring. Passed flows can be slowly reintroduced in to the dewatered area by leaving a silt barrier in place to allow water to slow and drop sediment to the extent possible.

K. Removed temporary diversion structures and related facilities shall be disposed of outside the District's right of way.

L. Temporary Diversions (i.e., bypass piping) shall accommodate utility relocation work.

M. Contractor is responsible for construction and maintenance of cofferdam and dewatering system. No compensation is allowed for failure of cofferdam, dewatering system, and other damages caused by failure.

23.05.02.02. Testing

A. Contractor shall provide independent testing company for water quality monitoring as required. Copies of the permits are included in Appendix C of these Specifications.

23.05.02.03. Submittals

A. Ten days before water diversion is implemented, the Contractor shall submit a proposed temporary water diversion plan to the Engineer for review and approval. The dewatering plan shall be in accordance with *Dewatering Plan Construction Within Lower Berryessa Creek Channel***,** dated June 14, 2014, and prepared by the District. As part of the plan, the Contractor shall propose a primary plan for the main water diversion plan and a secondary plan that is triggered for cases where diversion of water using the primary plan may be compromised. The Contractor shall certify with the submittal that the implementation of the proposed water diversion system shall not cause extension of the overall project schedule. The Engineer will expedite the review time following receipt of the submittal.

23.05.02.04. Measurement

A. Temporary water diversion will not be measured.

23.05.02.05. Payment

A. Full compensation for furnishing all labor, materials, tools, equipment and incidentals, and for doing all work required for temporary water diversion and dewatering, including water quality monitoring, accommodating fish surveys and relocations, as shown on the Drawings, as specified in these Specifications, and as directed by the Engineer, shall be considered as included in the lump sum price bid for CONTROL OF WATER, Bid Item No. 10, if authorized by the District, and no separate payment will be made therefor. Contractor shall not make a claim if the jobsite is washed out due to failure of the dewatering system.

23.06. Temporary Erosion Control

23.06.01. Temporary Silt Fence

23.06.01.01. Scope of Work

A. This work includes installing, maintaining, and removing silt fence specified in these Specifications and the contractor's approved SWPPP, and as directed by the Engineer. The SWPPP prepared for the project by the Contractor must

describe and include the use of silt fence as a best management practice for sediment control of the creeks and/or storm facilities.

B. This work is included in "Compliance with NPDES General Permit," Article 19.01. Compliance with NPDES General Permit, of these Specifications.

C. The Contractor's attention is directed to the Water Quality Certification from the San Francisco Bay Regional Water Quality Control Board in Appendix C, Conditions 3 of page 8 regarding construction-related materials or wastes not being allowed to enter any of the creeks at the project site.

23.06.01.02. Materials

A. Silt fence shall be either prefabricated or consist of separate components of silt fence fabric, posts, and fasteners.

B. Silt Fence Fabric:

1. Silt fence fabric shall be geotextile manufactured from woven polypropylene or polymer material. Silt Fence Fabric may be virgin or recycled, or a combination of virgin and recycled polymer materials. No virgin or recycled polymer materials shall contain biodegradable filler materials that can degrade the physical or chemical characteristics of the finished fabric. The Engineer may order tests to confirm the absence of biodegradable filler materials in conformance to the requirements in ASTM Designation: E 204 (Fourier Transformed Infrared Spectroscopy-FTIR).

2. Silt fence fabric shall conform to the following requirements:

Specification	Requirements
Width, mm, minimum	900
Grab tensile strength (25 mm grip), kilonewtons, minimum in each direction ASTM Designation: D 4632	0.45
Elongation, percent, minimum in each direction ASTM Designation: D 4632 (25 mm grip)	15
Ultraviolet stability, percent tensile strength retained after 500 hours, minimum ASTM Designation: D 4355 (xenon-arc lamp and water spray weathering device)	70

C. Posts

1. Posts must be wood or metal.

2. Wood posts must be:

a. Untreated fir or pine and cut from sound timber.

b. Straight and free of loose or unsound knots and other defects that would render the stakes unfit for use.

c. Pointed on the end to be driven into the ground.

d. At least 2” x 2” in size, and 4 feet long.

3. Metal posts must:

a. Be made of steel.

b. Have a “U,” “T,” “L,” or other cross sectional shape that can resist failure from lateral loads.

c. Be pointed on the end to be driven into the ground.

d. Weigh at least 0.75 pounds per foot.

e. Be at least 4 feet long.

f. Have a safety cap attached to the exposed end. The safety cap must be orange or red plastic and fit snugly to the metal post.

D. Fasteners

1. Fasteners for attaching silt fence fabric to posts shall be as follows:

a. When prefabricated silt fence is used, posts shall be inserted into sewn pockets.

b. Silt fence fabric shall be attached to wooden posts with nails or staples as recommended by the manufacturer or supplier. Tie wire or locking plastic fasteners shall be used to fasten the silt fence fabric to steel posts. Maximum spacing of fasteners shall be 8 inches along the length of the steel post.

23.06.01.03. Placement

A. Silt fence shall be installed parallel with the slope contour in reaches not to exceed 450 feet. A reach is considered a continuous run of silt fence from end to end or from an end to an opening, including joined panels. Each reach shall be

constructed so that the elevation at the base of the fence does not deviate from the contour more than one third of the fence height.

B. The silt fence fabric shall be installed on the side of the posts facing the slope. The silt fence fabric shall be anchored in a trench as recommended by the manufacturer or supplier. The trench shall be backfilled and mechanically or hand tamped to secure the silt fence fabric in the bottom of the trench.

C. Mechanically pushing 12 inches of the silt fence fabric vertically through the soil may be allowed if the Contractor can demonstrate to the Engineer that the silt fence fabric will not be damaged and will not slip out of the soil, resulting in sediment passing under the silt fence fabric.

D. At the option of the Contractor, the maximum post spacing may increase to 9 feet if the fence is reinforced by a wire or plastic material by prefabrication or by field installation. The field-assembled reinforced silt fence shall be able to retain saturated sediment without collapsing.

E. Silt fence shall be joined as shown on the plans. The tops of the posts shall be tied together by minimum of 2 wraps of tie wire of a minimum 16-gage diameter. The silt fence fabric shall be attached to the posts at the joint as specified in these special provisions.

F. Silt fence shall be repaired or replaced at the expense of the Contractor on the same day when the damage occurs.

G. When no longer required as determined by the Engineer, silt fence shall be removed from the site of the work. Trimming the silt fence fabric and leaving it in place will not be allowed.

H. Holes, depressions or any other ground disturbance caused by the removal of the silt fence shall be backfilled and repaired in conformance with the provisions in the first paragraph of Article 15-1.03A. General, of the State Standard Specifications for existing facilities.

23.06.01.04. Testing

A. There are no special requirements. However, Contractor shall periodically inspect and maintain the silt fence in accordance with the project approved SWPPP and the California Stormwater BMP Handbook, Sections SE-1 and SE-5, respectively.

23.06.01.05. Submittals

A. Submit a Certificate of Compliance for silt fence.

23.06.01.06. Measurement

A. Silt fence will not be measured.

23.06.01.07. Payment

A. Full compensation for furnishing all labor, materials, tools, equipment, and incidentals, and for doing all the work involved in constructing the silt fence, complete in place, including maintaining the silt fence, removal of materials, cleanup and disposal of retained sediment and debris, and backfilling and repairing holes, depressions and other ground disturbance, as shown on the Drawings, as specified in these Specifications, and as directed by the Engineer shall be considered as included in the lump sum price bid for COMPLIANCE WITH NPDES GENERAL PERMIT, Bid Item No. 1, if authorized by the District.

B. Costs incurred for repair or replacement of deteriorated or damaged materials until Project Completion shall be at the Contractor's expense, and no separate payment will be made therefor.

C. No additional payment will be made for multiple applications of silt fence in the same work area.

23.06.02. Temporary Fiber Rolls

23.06.02.01. Scope of Work

A. This work includes installing, maintaining, and removing fiber rolls specified in these Specifications and the contractor's approved SWPPP, and as directed by the Engineer. The SWPPP prepared for the project by the Contractor must describe and include the use of fiber rolls as a best management practice for sediment control of the creeks and/or storm facilities.

B. This work is included in "Compliance with NPDES General Permit," Article 19.01. Compliance with NPDES General Permit, of these Specifications.

C. The Contractor's attention is directed to the Water Quality Certification from the San Francisco Bay Regional Water Quality Control Board in Appendix C, Conditions 3 of page 8 regarding construction-related materials or wastes not being allowed to enter any of the creeks at the project site.

23.06.02.02. Materials

A. Fiber rolls shall be constructed on the project site with manufactured blankets consisting of one material or a combination of materials consisting of wood excelsior, rice or wheat straw, or coconut fibers.

B. Blankets shall measure approximately 2 m to 2.4 m wide by 20 m to 29 m in length. Wood excelsior material shall have individual fibers, 80 percent of which shall be 150 mm or longer in fiber length. Blankets shall have a biodegradable jute, sisal or coir fiber netting on at least one side. The blanket shall be rolled on the blanket's width and secured with jute twine spaced 2 m apart along the roll for the full length and 150 mm from each end of the individual rolls The finished roll diameter shall be a minimum of 200 mm and a maximum of 250 mm and shall

weigh not less than 0.81 kg/m. Overlapping of more than one blanket may be required to achieve the finished roll diameter. When overlapping is required, blankets shall be longitudinally overlapped 150 mm along the length of the fabric.

C. Fiber rolls shall be pre-manufactured rice or wheat straw, wood excelsior or coconut fiber rolls encapsulated within a biodegradable jute, sisal or coir fiber netting. Each roll shall be a minimum of 200 mm and a maximum of 250 mm in diameter, 3 m to 6 m in length and shall weigh not less than 1.6 kg/m. The netting shall have a minimum durability of one year after installation. The netting shall be secured tightly at each end of the individual rolls.

D. Stakes shall be:

1. Untreated fir or pine and cut from sound timber.

2. Straight and free of loose or unsound knots and other defects which would render the stakes unfit for use.

3. Pointed on the end to be driven into the ground.

4. For fiber roll, wood stakes must be at least 1” x 1” x 24” in size.

23.06.02.03. Placement

A. Before placing fiber roll, remove obstructions including rocks, clods, and debris greater than one inch in diameter from the ground.

B. Fiber rolls shall be installed prior to the application of other erosion control materials.

C. Furrows shall be constructed at a slight angle to the slope contour, to a depth of 2 to 4 inches, and at a sufficient width to hold the fiber rolls.

D. Place fiber roll approximately parallel to the slope contour in the furrows Individual rolls shall overlap minimum 3 feet with adjacent roll to create a continuous linear roll. For any 20-foot section of fiber roll, do not allow the fiber roll to vary more than 5 percent from level.

E. Secure with wood stakes every 4 feet along the total length of the fiber roll and 6 inches from end of each individual roll.

F. Stakes shall be driven flush or a maximum of 2 inches above the fiber roll.

23.06.02.04. Maintenance

A. Maintain silt fence and fiber roll to provide sediment holding capacity and to reduce runoff velocities.

B. Remove sediment deposits, trash, and debris from silt fence as needed or when directed by the Engineer. If removed sediment is deposited within project limits,

it must be stabilized and not subject to erosion by wind or water. Trash and debris shall be removed and disposed of.

C. Maintain silt fence by:

1. Removing sediment from behind the silt fence when sediment is 1/3 the height of the silt fence above ground.

2. Repairing or adjusting the silt fence when rills and other evidence of concentrated runoff occur beneath the silt fence fabric.

3. Repairing or replacing the silt fence fabric when it becomes split, torn, or unraveled.

4. Replacing or adjusting the fiber roll when rills and other evidence of concentrated runoff occur beneath the fiber roll.

5. Repairing or replacing the fiber roll when they become split, torn, or unraveled.

6. Adding stakes when the fiber roll slumps or sags.

7. Replacing broken or split wood stakes.

D. Repair silt fence and fiber roll within 24 hours of discovering damage unless the Engineer approves a longer period.

E. If Contractor vehicles, equipment, or activities disturb or displace silt fence and fiber roll, repair silt fence and fiber roll at Contractor expense.

F. The District does not pay maintenance costs for cleanup, repair, removal, disposal, or replacement due to improper installation or Contractor negligence.

23.06.02.05. Removal

A. When the Engineer determines that fiber roll is not required, Contractor shall remove and dispose of fiber rolls.

23.06.02.06. Testing

A. There are no special requirements. However, Contractor shall periodically inspect and maintain the fiber rolls in accordance with the project approved SWPPP and the California Stormwater BMP Handbook, Sections SE-1 and SE-5, respectively.

23.06.02.07. Submittals

A. Submit a Certificate of Compliance for fiber roll.

23.06.02.08. Measurement

A. Fiber roll will not be measured.

23.06.02.09. Payment

A. Full compensation for furnishing all labor, materials, tools, equipment, and incidentals, and for doing all the work involved in constructing the fiber roll, complete in place, including maintaining the fiber roll, removal of materials, cleanup and disposal of retained sediment and debris, and backfilling and repairing holes, depressions and other ground disturbance, as shown on the Drawings, as specified in these Specifications, and as directed by the Engineer shall be considered as included in the lump sum price bid for COMPLIANCE WITH NPDES GENERAL PERMIT, Bid Item No. 1, if authorized by the District.

B. Costs incurred for repair or replacement of deteriorated or damaged materials until Project Completion shall be at the Contractor's expense, and no separate payment will be made therefor.

C. No additional payment will be made for multiple applications of fiber roll in the same work area.

23.06.03. Temporary Hydroseeding

23.06.03.01. Scope of Work

A. In areas where civil work is not in its final condition and has been extended over a winter season leaving bare ground, as directed by the Engineer, hydroseeding shall be applied to all disturbed bare ground areas within the Project site.

B. Temporary Hydroseeding shall consist of all work and materials necessary including water to furnish and place hydroseeding on the slopes and all exposed bare soil areas that are disturbed or damaged as a result of the Contractor's construction and operation efforts, as required for erosion control to conform to the requirements in SWPPP, the project BMP's as part of these Specifications, and as directed by the Engineer.

C. The hydroseed shall be applied by October 15 of the construction year for which it is to be applied.

D. Temporary Hydroseeding must also be followed by the installation of temporary Erosion Control Blanket on the slopes of bare soil areas. Refer to Article 23.09. Erosion Control Blanket, for application of Erosion Control Blanket.

23.06.03.02. Materials

A. Hydroseed Mixture: as specified for Hydroseeding in Article 23.08.02. Materials, of these Specifications.

23.06.03.03. Soil Preparation

A. Prepare soil as specified for Hydroseeding in Article 23.07.03. Placement, of these Specifications.

23.06.03.04. Placement

A. Apply hydroseeding as specified for Hydroseeding in Article 23.08.04. Placement, of these Specifications.

23.06.03.05. Testing

A. No special requirements.

23.06.03.06. Submittals

A. Contractor shall submit samples to the Engineer of all Contractor furnished materials, including seed mix certificate and fertilizer product information for approval forty-eight (48) hours prior to commencing preparation. Hydroseed shall not be applied until approved by the Engineer.

23.06.03.07. Measurement

A. Hydroseeding shall not be measured.

23.06.03.08. Payment

A. Full compensation for furnishing all labor, materials, tools, equipment and incidentals and for doing all work required to install Hydroseeding and erosion control blanket for the winter season as specified in these Specifications, and as directed by the Engineer shall be considered as included in the lump sum price bid for COMPLIANCE WITH NPDES GENERAL PERMIT, Bid Item No. 1, if authorized by the District.

23.07. Erosion Control

23.07.01. Scope of Work

A. Erosion control shall consist of all work, materials, labor and equipment necessary to construct erosion control after final grading including hydroseeding, erosion control blanket, rock protection, and wood mulch at the locations as shown on the Drawings, as specified in these Specifications, and as directed by the Engineer.

B. In areas where civil work is not in its final condition and has been extended over a winter season leaving bare ground, the Contractor must install temporary erosion control. For temporary erosion control, the Contractor's attention is directed to Article 23.06.03 Temporary Hydroseeding. Temporary Erosion Control Fabric shall be installed in accordance with Article 23.09 Erosion Control Blanket.

C. All erosion control shall be applied by October 15 of the construction year for which it is to be applied.

23.07.02. Materials

A. Hydroseed materials shall be in accordance with Article 23.08.02. Materials, of these Specifications.

B. Erosion control blanket materials shall be in accordance with Article 23.09.02. Materials, of these Specifications.

C. Rock protection materials shall be in accordance with Article 24.09.02. Materials, of these Specifications.

D. Wood mulch materials shall be in accordance with Article 24.10.02. Materials, of these Specifications.

23.07.03. Placement

A. Hydroseeding shall be placed in accordance with Article 23.08.04. Placement, of these Specifications.

B. Erosion control blanket shall be placed in accordance with Article 23.09.04. Placement, of these Specifications.

C. Rock protection shall be placed in accordance with Article 24.09.03. Placement, of these Specifications.

D. Wood mulch shall be placed in accordance with Article 24.10.03. Placement, of these Specifications.

23.07.04. Testing

A. No special requirements.

23.07.05. Submittals

A. Hydroseeding submittal shall be in accordance with Article 23.08.06. Submittals, of these Specifications.

B. Erosion control blanket submittal shall be in accordance with Article 23.09.06. Submittals, of these Specifications

C. Rock protection submittal shall be in accordance with Article 24.09.05. Submittals, of these Specifications

23.07.06. Measurement

A. Erosion control will not be measured.

23.07.07. Payment

A. Full compensation for furnishing all labor, materials, tools, equipment and incidentals and for doing all work required to install erosion control including hydroseeding and erosion control blanket, as shown on the Drawings, as specified in these Specifications, and as directed by the Engineer shall be considered as included in the lump sum price bid for COMPLIANCE WITH NPDES GENERAL PERMIT, Bid Item No. 1, if authorized by the District.

23.08. Hydroseeding

23.08.01. Scope of Work

A. Hydroseeding shall consist of all work and materials necessary including water to furnish and place hydroseeding on the slopes as shown on the Drawings and all other exposed bare soil areas that are disturbed or damaged as a result of grading and Contractor's construction and operation efforts, but shall not include the wetland planting areas where hydroseeding shall not be placed.

B. The Hydroseed shall be applied by October 15 of the construction year for which it is to be applied.

C. Hydroseed followed by Erosion Control Blanket must be applied for both temporary and permanent applications. Refer to Article 23.09. Erosion Control Blanket, for application of erosion control blanket.

23.08.02. Materials

A. Hydroseed Mixture: Plant List of species and pounds of pure live seed per acre for native grass hydroseed mix is provided in Table 23.08-1 below.

TABLE 23.08-1
Hydroseed for All Areas

Species Name	Common Name	Rate (lbs./acre)	Propagule Type	Minimum Purity	Minimum Germination
Bromus carinatus	'S. F. Bay Area' California brome	10	Pure Live Seed (PLS)	95%	85%
Elymus glaucus	'Berkeley' Blue wild-rye	12	PLS	95%	85%
Hordeum brachyantherum subsp. californicum	Prostrate California barley	16	PLS	90%	80%
Vulpia microstachys	Three Weeks fescue	5	PLS	95%	70%

1. Percent purity and percent germination are given by the manufacturer and shall be submitted to the Engineer by the Contractor upon delivery.

    a. 3,000 pounds per acre of virgin wood fiber or recycled fiber mulch with seed, Nature's Own or equal, and 150 pounds per acre of guar.

    b. No Hydroseeding shall be applied on the bench planting area.

    c. Sufficient water for application.

    d. Coloring agent to be a biodegradable, nontoxic coloring agent free from copper, mercury, and arsenic.

B. Seed, as supplied by the Contractor, shall be from San Francisco Bay Area ecotypes, when available.

Seed may be available from Pacific Coast Seed, 533 Hawthorn Place, Livermore, CA, (925) 373-4417, or approved equal.

C. Seed shall be kept in a cool, shaded place until utilized. Contractor shall request seed delivery just before installation and only in the amounts that can be planted that day to prevent heating and desiccation.

D. The tackifier for planting areas shall be an organic substance in powder form and shall guar-based and packed in clearly marked bags stating the contents of each bag. The tackifier will require no curing time, shall remain soft and rewettable, and shall not inhibit seed germination.

E. Mulch shall be produced from recycled fiber and shall be free of synthetic or plastic materials and chemical contamination. Mulch shall not contain more than 7 percent ash, shall contain less than 250 parts per million boron, and shall be nontoxic to plants and wildlife. Mulch shall have a water-holding capacity of by weight of not less than 12 percent. Mulch shall be of such character that it will disperse into a uniform slurry when mixed with water. Water content of the mulch shall be marked on the package and shall not exceed 15 percent of the dry fiber weight. Mulch shall be colored to contrast with the soils to which it is applied.

F. Water shall be from a recycled water source. Water from Calera Creek shall not be used in the hydroseed mixture. Contractor shall apply for a construction recycled water mater at the Milpitas City Hall (455 East Calaveras Boulevard) prior to start of work. Construction potable water will only be made available if it can be demonstrated that recycled water cannot be used for construction activities. The same rental process as for construction recycled water will apply.

23.08.03. Soil Preparation

A. Prior to Hydroseeding application, the area to receive the Hydroseed, shall be roughened as follows:

1. *Slopes steeper than and equal to 2:1*: roughen, by use of a crimping/punching type roller. A sheep's foot roller shall not be used. Track walking shall only be allowed where other methods are impractical. Roughen slopes by running equipment perpendicular to slope contours.

2. *Slopes flatter than 2:1*: roughen by scarifying to a depth of 4 inches. Surfaces shall be disked or otherwise worked to break all clods to 2 inches or smaller in size.

3. Contractor shall accompany the Engineer to confirm the soil preparation is adequate. Contractor shall remedy identified areas as needed and no extra payment will be made therefore.

B. Revegetation bench, the ground surface of the emplaced topsoil shall remain undisturbed after it is brought to finished grade per the Drawings.

C. Areas to be hydroseeded shall be free of weed plants.

23.08.04. Placement

A. Hydroseeding Application and Preparation:

1. Hydroseeding shall be placed in dry soil in all areas of disturbed soil excluding low flow channel, rock protection areas, and the Aggregate Base Maintenance Road, as directed by the Engineer.

2. The Contractor shall plan and execute the Erosion Control Hydroseeding so as to allow the seeds to be applied prior to October 15 of the construction year.

3. Hydroseed slurry mixture shall consist of seed, mulch, tackifier, water, and coloring agent. It shall be applied in one (1) operation. Application will occur as close as possible to the beginning of the raining season. The hydraulic mix must not be applied when rainfall is anticipated within 24 hours. Application on the revegetation bench shall occur before plant and cutting installation occurs.

4. Mixing shall be performed in a tank, with a built-in continuous agitation and recirculation system, of sufficient operating capacity to produce homogeneous slurry and a discharge system that will apply the slurry to the designated areas at a continuous and uniform rate.

5. The slurry preparation shall take place at the Project site and shall begin by adding water to the tank when the engine is at half throttle. When the

water level has reached the height of the agitator shaft, good recirculation shall be established, and at this time the seed, mulch, and tackifier shall be added. Spraying shall commence immediately when the tank is full.

6. Contractor shall spray designated areas with the slurry in a sweeping motion, in an arched stream, in successive passes as necessary until a uniform coat is achieved and the material is spread at the required rates per acre.

7. At all times, materials shall be kept uniformly mixed in the hydroseed tank during the duration of the application operation. The seed, mulch, and tackifier shall be kept suspended in the hydroseed tank such that all of the components are applied evenly.

8. In applying the slurry, care shall be taken to provide even and uniform coverage. Overspray and other residue or trash from the hydroseeding operations shall be cleaned and removed from the site on the same day of application.

9. A slurry mixture, which has not been applied within four (4) hours after mixing, shall be rejected and replaced at the Contractor's expense.

10. Hydroseeding operations shall not take place if temperatures are over ninety degrees Fahrenheit (90ºF).

11. After the final application, do not allow pedestrians or equipment on the treated areas.

12. After Hydroseeding, place erosion control blanket on top of hydroseeded surface, except at wetland planting areas where erosion control blankets will not be used, since hydroseed has cured for a minimum of 24 hours. The hydroseed needs to be cured prior to the blanket installation to eliminate seed disturbance during blanket installation. It is the Contractor's responsibility to ensure appropriate curing time due to weather and protect seed coverage on slopes while installing the blanket. Fasten blanket to soil over all areas to receive hydroseed in accordance to Article 23.09. Erosion Control Blanket.

23.08.05. Testing

A. No special requirements.

23.08.06. Submittals

A. Contractor shall submit samples to the Engineer of all Contractor furnished materials, including seed mix certificate and fertilizer product information for approval forty-eight (48) hours prior to commencing preparation. Hydroseed shall not be applied until approved by the Engineer.

23.08.07. Measurement

A. Hydroseeding shall not be measured.

23.08.08. Payment

A. Full compensation for furnishing all labor, materials, tools, equipment and incidentals and for doing all work required to install hydroseeding, as specified in these Specifications, and as directed by the Engineer shall be considered as incidental and shall be considered as included in the lump sum price bid for COMPLIANCE WITH NPDES GENERAL PERMIT, Bid Item No. 1, if authorized by the District.

B. Costs incurred for repair or replacement of bare, sparse, or damaged areas shall be considered as included in the other items of work and no separate payment will be made therefor.

23.09. Erosion Control Blanket

23.09.01. Scope of Work

A. This work includes installing Erosion Control Blanket and shall consist of all work and materials necessary to furnish and place rolled erosion control netting, complete in place.

B. Contractor shall place Erosion Control Blanket for any temporary or permanent applications from top of the bank to the toe of the low flow channel including the slope and wetland planting areas as shown on the Drawings and for any and all exposed areas that are disturbed or damaged as a result of the Contractor's construction and operation efforts. These areas will be limited within the project limits.

23.09.02. Materials

A. Erosion Control Blanket shall be C125 BN double net coconut blanket manufactured by North American Green or approved equal.

B. The coconut fiber erosion control blanket shall be a machine-produced 100% biodegradable blanket with a 100% coconut fiber matrix with a functional longevity of up to 24 months.

C. The blanket shall be of consistent thickness with the coconut fiber evenly distributed over the entire area of the blanket. The blanket shall be covered on the top and bottom sides with 100% biodegradable woven, natural, organic fiber netting. The top netting shall consist of machine directional strands formed from two intertwined yarns with cross directional stands interwoven through the twisted machine strands (commonly referred to as a Leno weave) to form an approximate 1.27 x 2.54 cm mesh. The blanket shall be sewn together on 3.81 cm centers (50 stitches per roll width) with biodegradable thread.

D. Erosion Control Blanket shall meet requirements established by the Erosion Control Technology Council (ECTC) Specification.

E. The coconut fiber Erosion Control Blanket shall have the following properties:

1. **Matrix**: 100% Coconut Fiber (0.50 lb/yd^2)

2. **Netting**: Top—Leno woven 100% biodegradable organic jute fiber (9.30 lbs/1,000 ft^2 [4.50 kg/100 m^2] approximate weight)

3. **Bottom**: 100% biodegradable organic jute fiber (7.70 lbs/1000 ft^2 [3.76 kg/100 m^2] approximate weight)

4. **Thread**: Biodegradable

23.09.03. Fasteners

A. Biodegradable wood stakes shall be 12 inch Eco-STAKETM by North American Green or approved equal.

B. The stakes shall be 100% biodegradable and a “1”—shaped hardwood pin designed to safely and effectively secure erosion control blankets. The wood stake shall exhibit ample rigidity to enable being driven into hard ground, with sufficient flexibility to resist breakage. The wood stake shall be the north American Green Eco-STAKE or approved equal, with the following dimensions:

Leg Length:	11.00 in. (27.94 cm)
Head Width:	1.25 in. (3.18 cm)
Head Thickness:	0.40 in. (1.02 cm)
Leg Width:	0.60 in. (1.52 cm) (tapered to point)
Leg Thickness:	0.40 in. (1.02 cm)
Total Length:	12.00 in. (30.48 cm)
Or metal U-shaped staples	(12 in. x 1 in. x 12 in.)

23.09.04. Placement

A. Prior to placing and securing blankets, review all installation, lapping and staking details and procedures with engineer for approval. Erosion Control Blanket shall be installed within 24-hours of application of the Hydroseeding (see Article 23.08. Hydroseeding) for any temporary or permanent applications. The blanket shall be carefully placed as to not disturb the hydroseeding.

B. Dig 6 inches wide by 6 inches deep trench across the top of the slope where you will install erosion control blanker. The trenches act as an anchor for the blanket.

C. Install the erosion control blanker in the trench. Place at least 12 inches of the blanket above the trench, extending up the slope. Install anchoring stakes 12 inches on center through the blanket and into the bottom of the trench.

D. Backfill the trench with dirt and make sure it is compacted to help hold the erosion control blanket in place. After the soil in the trench has been compacted, hydroseed the dirt covering the trench. Bring the 12 inches of blanket down over the seeded trench and install more stakes, 12 inches apart, across the length of the blanket.

E. Unroll the remaining erosion control blanket over the hydroseeded slope, the bench and the side slope of low flow channel. Next to low flow channel slope toe, at the bottom of the channel, follow the same steps as installing blanket at top of bank to install the blanket at bottom of the channel except no hydroseeding shall be applied on the dirt covering the trench.

F. If more than one roll of blanket is needed, install it as installing roof shingles, with a 12 inches minimum overlap. Only one full blanket shall be used. No horizontal splicing is allowed.

G. Install stakes at seem and at the body of the blanket as shown on the Drawings. Staples that are placed according to directions help decrease the weight and pull on the erosion control blanket.

H. After erosion control blanket application, do not allow pedestrians or equipment on the treated areas.

23.09.05. Testing

A. No testing is required for Erosion Control Blanket.

23.09.06. Submittals

A. Submit a Certificate of Compliance under Section 6-2.03C Certificates of Compliance, of the State Standard Specifications for:

1. Netting
2. Fastener

23.09.07. Measurement

A. Erosion Control Blanket shall not be measured.

23.09.08. Payment

A. Full compensation for furnishing all labor, materials, tools, equipment and incidentals and for doing all work required to install Erosion Control Blanket, as shown on the Drawings, as specified in these Specifications, and as directed by the Engineer shall be considered as included in the lump sum price bid for COMPLIANCE WITH NPDES GENERAL PERMIT, Bid Item No. 1, if authorized by the District.

B. Costs incurred for repair or replacement of bare, sparse, or damaged areas shall be considered as included in the lump sum or unit price bid for the items of work which requires erosion control blanket, and no separate payment will be made therefor.

THIS PAGE INTENTIONALLY LEFT BLANK

SECTION 24. EARTHWORK

24.01. Channel Excavation, Topsoil, and Channel Embankment

A. The Contractor's attention is directed to Article 16.02 Utilities, Article 16.03 Protection of Existing Improvements, and Article 16.04 Monitoring Surveys, of these Specifications.

B. All Earthwork shall be in accordance with the findings and recommendations in the "Design Level Addendum — Lower Calera Creek Geotechnical Investigation Report," by TRC dated December 29, 2010 and "Geotechnical Design Report — Lower Calera Creek Flood Protection Project," by Cal Engineering & Geology dated January 23, 2019.

24.01.01. Channel Excavation—Bid Item No. 11

24.01.01.01. Scope of Work

A. Channel excavation shall consist of all work and materials necessary to excavate, grade, transport, and dispose of surplus and unsuitable materials, in preparation for placement of new flood walls and retaining walls, hydroseeding and erosion control blankets, maintenance roads, ramps, access areas, drainage ditches, channel lining, revegetated areas, and for all other miscellaneous excavation and grading not included in other items of work, to the lines, contours, elevations, and dimensions as shown on the Drawings, as specified in these Specifications and as directed by the Engineer.

B. In accordance with Article 24.01.02 Topsoil, all excavation, salvaging and stockpiling of topsoil materials identified in the Topsoil Salvage Plan areas shown on the Drawings shall precede channel excavation activities. It is important that the Contractor perform the topsoil excavation before channel excavation because the limits and depth of topsoil salvage have been identified as the most suitable soils for landscape purposes.

C. The Contractor shall limit the extent of channel excavation activity each year to only the portion of the creek where flood protection improvements will be completed by October 15th of that calendar year. Channel excavation shall not begin until the Engineer has received and approved the preconstruction quantity measurement survey data provided by the Contractor, which is to be performed after the completion of dewatering, clearing, and grubbing in the areas to be excavated. Prior to any channel excavation activities, the Contractor shall also submit a "Proposed Excavation and Disposal Plan" in accordance with this Article, to the Engineer for review and approval.

D. The geotechnical report by Cal Engineering & Geology noted that the historic high groundwater at the site is within the upper 10 feet and can vary throughout the year. The report also provides groundwater information from monitoring wells at several locations throughout the project site. The Contractor shall make themselves aware of this groundwater information and use this information as

part of the development of their Control of Water Plan. Refer to Article 13.04. District-Furnished reports, for District-Furnished Reports.

E. Channel excavations shall conform to the design grades shown in the Drawings and to the applicable provisions of Section 19 Earthwork, and Section 19-2 Roadway Excavation, of the State Specifications except as modified by these Specifications. The provisions of Section 19-1.03D Buried Man-Made Objects, of the State Specifications shall not apply. The Contractor's attention is directed to Article 24.06. Unsuitable Material, of these Specifications for removal and disposal of unsuitable material.

F. Contractor shall note that channel excavation will take place in close proximity to residential properties and structures and to provide noise and vibration monitoring in accordance with Article 18.03. Noise Pollution and Vibration Monitoring, of these Specifications.

G. All excavations shall be closely monitored during construction to detect any evidence of instability and distress to these adjacent structures and properties per Article 16.04. Monitoring Surveys, of these Specifications. In addition, the following precautions shall be taken:

1. No construction access, staging, parking, or storage shall be permitted within 5-feet of adjacent properties or top of bank.

2. Heavy equipment shall be kept a minimum of five (5) feet away from the edge of any pool or structure.

3. Use of vibratory equipment or any equipment that shakes the ground shall be minimized in the vicinity of swimming pools or structures.

4. Contractor shall not over-excavate in vicinity of structures or swimming pools, except as directed by the Engineer.

H. The disposal site for excavated materials may require that a representative set of soil samples be collected from the excavated materials and analyzed for the soil contaminants that are known to occur within the project area prior to accepting them in order to confirm that potential contaminants are within the levels that may be legally acceptable. The Contractor shall be responsible for all costs associated with testing to determine whether the material is acceptable at the Contractor's preferred disposal site.

I. The District has performed an investigation of the on-site soils for potential contaminants. The investigation report is available on the District's website for Contractor's review. Based on the investigation report, the Contractor shall assume that the surplus on-site material can be disposed to a non-hazardous soil landfill.

J. In the event that excavated materials appear to be contaminated with regulated materials, or as determined by field observation and/or the Contractor's initial soil

tests that cannot be disposed of to a non-hazardous soil landfill site or lower, then additional costs resulting from this situation, including though not necessarily limited to additional testing, stockpiling, double handling, special disposal, and loss of Contractor rate of production, shall be paid for by the District per Article 3.09. Differing Conditions.

K. The discovery of a sensitive species nesting bird or other form of wildlife, that affects the Contractor's operation, will be handled in accordance with Article 19.07 Migratory Birds and Article 19.08 Other Wildlife and Fish Species.

L. Channel excavation does not include the removal of concrete rubble, sacked concrete buried man-made objects or concrete blocks on the bottom or sides of the existing creek channel. Removal of such material is included in DEMOLITION AND DISPOSAL, Bid Item No. 9.

M. With the exception of topsoil, the Contractor shall assume that none of the on-site soils can be reused as fill as part of their bid.

N. Areas that have been over-excavated during channel excavation, except where shown on the Drawings or as directed by the Engineer, shall be backfilled with suitable materials in accordance with Article 24.01.03. Channel Embankment, of these Specifications, at the Contractor's own expense and at no extra cost to the District.

O. The Contractor shall provide shoring required for channel excavation in accordance with Article 24.11. Shoring, of these Specifications.

P. At the end of each construction season by October 15, any and all disturbed soils shall be hydroseeded and then covered with erosion control blankets in accordance with Articles 23.06.03 Temporary Hydroseeding, Article 23.08. Hydroseeding, and 23.09. Erosion Control Blanket, of these Specifications. Hydroseeding and erosion control blanket applies to both temporary and final conditions.

24.01.01.02. Materials

A. No technical requirements.

24.01.01.03. Placement

A. All channel excavation shall be made to finish grade as shown on the Drawings and specified in these Specifications.

B. Contractor shall keep exposed slopes moist, but not saturated, by occasional light spraying of water to minimize sloughing and caving of granular soils that may be exposed along the excavation slopes. If, despite these measures, localized slope failure occurs, immediately notify the Engineer to provide direction on appropriate mitigation measures.

C. The finish grade surface elevations shall conform to the tolerances set forth in Article 15.04. Construction Survey, of these Specifications.

D. Removal, disposal and replacement of unsuitable material shall conform to the requirements of Article 24.06. Unsuitable Material, of these Specifications.

E. No debris, exposed tree roots, or other objectionable materials shall be permitted in the final section.

F. Working Platform

1. Groundwater shall be expected during excavation and controlled in accordance with Article 23.05.01. Control of Water within Existing Course. Soft and loose, saturated native soil deposits may be encountered at the excavation bottom (creek bed/maintenance road). In such cases, working conditions at the bottom of the excavation may become difficult; equipment used at the bottom of the excavation may lose mobility. The Contractor shall take adequate measures to minimize the disturbance of the sensitive deposits at the excavation subgrade. The Contractor may minimize the disturbance of sensitive deposits or mitigate existing soft ground conditions by constructing a working platform at the bottom of the excavation. The working platform may be installed by:

   a. Over-excavating 18 inches below the planned subgrade;

   b. Placing a stabilizing subgrade enhancement geotextile at the bottom of the resulting excavation;

   c. Backfilling with 3/4-inch crushed rock or other such approved bridging material; and

   d. Overlapping the ends of the subgrade enhancement geotextile on top of the bridging material for a minimum distance of 2 feet. The imported and on-site bridging materials and sources should be approved by the District's Geotechnical Engineer prior to importing and placing the materials on the project site. The top of the bridging layer shall be densified by vibratory compaction equipment. The Contractor's method of compacting the bridging layer shall be reviewed by the District's Geotechnical Engineer.

2. At the end of construction, the Contractor shall remove any working platforms adjacent to a revegetation bench and replace the entire area at full depth with soil material meeting the requirements of Article 24.01.02.02. Materials. The Contractor shall place this soil in accordance with Article 24.01.02.03. Placement.

3. The Contractor may use other methods of subgrade stabilization. The Contractor's proposed method shall be reviewed and approved by the District's Geotechnical Engineer prior to implementation.

4. Occasionally, clayey sands, poorly graded sands, well graded sands will be exposed within the cut slopes. These types of soil have relatively high erosion potential. Contractor shall notify the Engineer to mitigate erosion potential of these soils if found.

G. Topsoil Salvaging and Disposal of Excavated Soils

1. All surplus excavated materials shall be removed from the project limits and properly disposed at an appropriate landfill in accordance with this Article. Soils designated for topsoil salvage, as shown on the Drawings, shall be evaluated by the soils scientist during excavation and stockpiled in accordance with Article 24.01.02 Topsoil.

24.01.01.04. Testing

A. The Contractor shall be responsible to collect soil samples of surplus channel excavation and have them analyzed by a certified laboratory to determine the eligibility to dispose the soil at a licensed landfill site in compliance with local, state, and federal laws. The Contractor shall not rely on the District's prior reports and testing data for acceptability with the licensed landfill.

B. Laboratory and field compaction tests for backfill of over excavation shall be in accordance with Article 24.01.03 Channel Embankment.

24.01.01.05. Submittals

A. The Contractor shall submit a "Proposed Excavation and Disposal Plan." This plan shall be submitted to the Engineer for review and approval prior to any channel excavation work. The plan shall include a description of the area for stockpiling topsoil materials in accordance with Article 24.01.02 Topsoil. Contractor's attention is directed to Article 8.05. Excavation Safety Plans, of these Specifications.

B. The Contractor's attention is directed to Article 24.11. Shoring, of these Specifications, for submittals required for all shoring systems to be used during channel excavation.

C. Prior to submitting soil samples for laboratory analysis, Contractor shall submit for Engineer's approval the name and qualifications of the soil testing laboratory.

24.01.01.06. Measurement

A. The measurement of Channel Excavation shall be by cubic yards. The quantities of channel excavation shown on the Proposal Form are approximate only and the Cross Sections included in the Drawings are for informational purposes only. Measurement of excavation quantities for payment shall be per Article 15.04. Construction Survey, of these Specifications.

24.01.01.07. Payment

A. Full compensation for furnishing all labor, materials, tools, equipment and incidentals, and for doing all work required for channel excavation (except for topsoil salvaging and backfill for over-excavation), as shown on the Drawings, as specified in these Specifications and as directed by the Engineer, including the required submittals, off-haul, testing, disposal to a non-hazardous landfill, disposal fees, construction of working platform if required, and disposal of unsuitable materials shall be included in the unit price bid per cubic yard for CHANNEL EXCAVATION, Bid Item No. 11, if authorized by the District.

B. Full compensation for furnishing all labor, materials, tools, equipment and incidentals, and for doing all work necessary to provide survey for excavation quantity measurement shall be considered as included in the prices bid for various items of work that require survey per Article 15.04. Construction Survey, and no separate payment will be made therefor.

C. Full compensation for furnishing all labor, materials, tools, equipment and incidentals, and for doing all work necessary for excavation, salvage and placement of topsoil, shall be included in the unit price per cubic yard for TOPSOIL, Bid Item No. 12, if authorized by the District.

D. Full compensation for furnishing all labor, materials, tools, equipment and incidentals, and for doing all work necessary for backfill for over excavation, shall be included in the unit price bid per cubic yard for CHANNEL EMBANKMENT, Bid Item No. 13, if authorized by the District.

24.01.02. Topsoil—Bid Item No. 12, Additional Topsoil—Supplemental Bid Item No. 1

24.01.02.01. Scope of Work

A. Topsoil shall consist of furnishing all material, labor and equipment necessary to perform the Work for professional services of a qualified soil scientist, excavation, stockpiling and placing the topsoil from Topsoil Salvage Plan areas as shown on Drawings and as specified herein.

B. Contractor shall provide a qualified soil scientist to monitor all topsoil salvage, stockpiling, and placement work. The qualified soil scientist shall have a B.S. or M.S. degree in soil science and at least 5 years of recent project experience designing and monitoring native plant revegetation projects, which included quantitative horticultural soils suitability analysis, at an experienced firm such as Kelley & Associates, Tallus Soil Consulting LLC, or approved equal. The Contractor shall submit a resume and proof of current license as a Certified Professional Soil Scientist (CPSS) from the Soil Science Society of America.

C. Within the first 20 days of issuing the Notice to Proceed, Contractor shall provide Engineer with proposed soil scientist's name, employer name, and qualifications and obtain Engineer's written approval of proposed soil scientist.

24.01.02.02. Materials

A. Topsoil shall be salvaged from on-site soils derived from the Topsoil Salvage Plan areas shown on the Drawings, and as directed by the Engineer or the District's Biologist. Topsoil shall be excavated before channel excavation begins to ensure that suitable soils are taken at the correct depths and locations delineated on the Drawings. If additional topsoil is needed, then topsoil shall either be imported or salvaged from surplus on-site materials to meet the estimated volume required for the project. Imported and on-site surplus soils to be used as topsoil shall meet the material and placement requirements of this Article.

B. Contractor's soil scientist shall review the Topsoil Salvage Plan in the Drawings, provide guidance and direction to equipment operations during topsoil salvage to achieve the volume of suitable topsoil necessary.

C. If additional topsoil materials are needed to meet the necessary volume, Contractor shall evaluate topsoil meeting the following requirements:

On-Site Topsoil Salvage Suitability Specifications

½ Rock (< 1 inch)	0-10% by volume
Gravel (2-13 mm)	0-10%
Sand (0.05-2 mm)	50-75%
Silt (0.002-0.05mm)	10-30%
Silt plus clay (<0.05mm)	25-50%
Clay (< 0.002mm)	10-25%
Organic Matter	3-5% by dry weight basis
Salinity	< 2 decisiemens per meter
Sodium adsorption	< 6.0
Boron	< 1.0 ppm
pH of saturated paste	5.5 - 7.8
Calcium: Magnesium ratio	< 2:1
Qualitative Lime Level	Low in opinion of testing laboratory

D. Organic matter, Calcium: Magnesium ratio, and pH requirements can be modified by obtaining a recommendation from a Restoration Ecologist or Restoration Landscape Architect.

24.01.02.03. Placement

A. Topsoil salvaging/stockpiling:

1. After clearing and grubbing but before channel excavation, Contractor shall excavate and salvage topsoil from Topsoil Salvage Areas 1 and 2 from 0.5 feet to 2.5 feet below existing grade (the top 0.5 feet shall be cleared and grubbed per Articles 23.02. Clearing and Grubbing, and 24.01.01.03.D.

2. Contractor shall salvage sufficient soil volume to meet the topsoil placement requirements, as shown on Drawings and per this Article.

3. Prior to stockpiling suitable topsoil, Contractor shall first place a geotextile filter fabric down to prevent contamination with soil pathogens. Contractor shall stockpile the salvaged topsoil in a clean area at a location approved by the Engineer. The topsoil collection, handling, associated transportation, staging, and storage areas shall be provided by the Contractor at the Contractor's expense.

4. Contractor shall estimate the quantity of suitable topsoil harvested. If Contractor determines that the volume of suitable topsoil available on-site is less than that required for topsoil placement, then prior to commencement of topsoil placement, Contractor shall provide the Engineer with an estimate of the volume of suitable topsoil harvested and the volume of remaining topsoil needed.

5. Place topsoil stockpiles in shallow windrows to increase surface area to volume ratio and reduce potential for stockpiling to damage favorable horticultural characteristics. The optimum stockpile height is between three (3) and five (5) feet, but no greater than eight (8) feet.

6. Contractor shall separate salvaged topsoil from all other stockpiled soils and install clear signage demarcating topsoil stockpiles.

7. Treat stockpiles with an organic tackifier or water regularly to control dust and to reduce the spread of airborne weed seed. Stockpiles shall not be allowed to contact standing water to prevent contamination with soil-borne pathogens.

8. Install a silt fence and orange construction fencing (or a combined product such as ERTEC E-Fence TM or approved equal) around the perimeter of each stockpile location to prevent erosion and to avoid disturbance by construction activities.

B. Topsoil Placement at Bench

1. Topsoil placement thickness should be a minimum of thirteen (13) inches.

2. Amend placed topsoil by spreading composted organic matter at a rate of 3 cubic yards per 1000 square feet and thoroughly mix to a depth of 6 inches.

3. Topsoil shall have a maximum of 85% relative compaction.

4. Contractor shall only operate low-impact vehicles exerting ground pressure of less than 6 psi while placing topsoil for the wetland revegetation bench.

C. If the Engineer determines that topsoil stockpiles have been placed in areas with potential to contaminate the topsoil with soil-borne pathogens, the bottom 6 inches of the topsoil in the stockpiles shall be left in place and untouched as a buffer with the soil-borne pathogens. This contaminated topsoil material shall be disposed of in accordance with Article 23.02. Clearing and Grubbing.

24.01.02.04. Testing

A. FOR ADDITIONAL TOPSOIL ONLY: The Contractor shall be responsible to collect soil samples of topsoil and have them analyzed by a certified laboratory to determine the eligibility for use for the bench.

B. Laboratory and field compaction tests for topsoil shall be performed by the Contractor. Any area that exceeds the maximum relative compaction requirements shall be removed and re-compacted until the field compaction tests are below the maximum relative compaction requirements. All costs for such required removal and re-compaction of materials, including costs for retesting, shall be borne by the Contractor. The ASTM D1557 laboratory compaction tests should be performed at the time of construction to provide a proper basis for compaction control.

24.01.02.05. Submittals

A. The Contractor shall submit to the Engineer a topsoil suitability report which documents the topsoil sampling locations, the types of laboratory testing conducted, the test results, and the quality of suitable topsoil from the project site.

B. Resume of the Contractor's soil scientist. The qualified soil scientist shall have a B.S. or M.S. degree in soil science and at least 5 years of recent project experience designing and monitoring native plant revegetation projects, which included quantitative horticultural soils suitability analysis, at an experienced firm such as Kelley & Associates, Tallus Soil Consulting LLC, or approved equal. The Contractor shall provide a proof of current license as a Certified Professional Soil Scientist (CPSS) from the Soil Science Society of America.

C. Prior to submitting soil samples for laboratory analysis, Contractor shall submit for Engineer's approval the name and qualifications of the soil testing laboratory.

24.01.02.06. Measurement

A. The measurement of Topsoil shall be by cubic yards. The quantities of channel excavation shown on the Proposal and Bid Form are approximate only and the Cross Sections included in the Drawings are for informational purposes only. Measurement of topsoil quantities for payment shall be per Article 15.04. Construction Survey, of these Specifications.

24.01.02.07. Payment

A. Full compensation for furnishing all labor, materials, tools, equipment and incidentals, and for doing all work required for topsoil removal, salvage, transportation, stockpiling, fill and placement, as shown on the Drawings, as specified in these Specifications and as directed by the Engineer, shall be included in the unit price bid per cubic yard for TOPSOIL, Bid Item No. 12, if authorized by the District.

B. If the volume of topsoil shown in the Topsoil Salvage Plan areas is not sufficient to meet the volume required for fill of the vegetated bench, full compensation for furnishing all labor, materials, tools, equipment, sampling, testing, and incidentals, and for doing all work required for additional topsoil removal, salvage, transportation, stockpiling, fill and placement, as shown on the Drawings, as specified in these Specifications and as directed by the Engineer, shall be included in the unit price bid per cubic yard for ADDITIONAL TOPSOIL, Supplemental Bid Item No. 1, if authorized by the District.

24.01.03. Channel Embankment—Bid Item No. 13

24.01.03.01. Scope of Work

A. Channel embankments shall be constructed of suitable earth materials obtained from a quarry source as prescribed herein, and to the extent shown on the Drawings. Channel Embankment shall consist of all work, materials, equipment, and incidentals necessary to furnish, transport, place, and compact suitable import soils for backfilling areas as shown on the Drawings, as specified in these Specifications, and as directed by the Engineer.

B. Channel embankment shall conform to the applicable provisions of Section 19-6 Embankment Construction, of the State Specifications, except as modified by these Specifications.

C. The Contractor’s attention is directed to the available geotechnical investigation reports listed in Article 13.04.01. Geotechnical Reports. All earthwork shall be in accordance with the findings and recommendations in the project geotechnical reports.

D. At the end of each construction season, all disturbed earthen soils shall be hydroseeded and covered with erosion control blankets. This applies to both temporary and final conditions.

24.01.03.02. Materials

A. Imported materials shall conform to applicable provisions of Section 19-7.02C Imported Borrow, of the State Specifications. The material shall have the following characteristics:

1. At least 50% (by weight) of the soil materials passing US Standard Sieve No. 200.

2. At least 75% (by weight) of the soil materials passing US Standard Sieve No. 4.

3. Plasticity Index (PI) in the range of 10 to 20.

4. Liquid limit not to exceed 40.

5. The soil should not contain rocks or lumps over 3 inches in the greatest dimension.

6. No more that 10% of the soil particles should be greater than 1.5 inches in the greatest dimension.

7. Vertical hydraulic conductivity of $1x10^{-6}$ centimeters per second or less.

8. Soil shall be free of organic matter, trash, concrete rubble and other deleterious material, as well as uncontaminated by regulated materials.

9. The import material shall be free from contaminants. The contractor shall provide a letter from a state certified lab that the imported material is free from contaminants.

B. The Contractor's attention is directed to Article 24.01.03.05. Submittals, for determining the requirements for a material quality test plan to be submitted for review and approval by the Engineer prior to use of import Channel Embankment material on the project.

C. Hydroseeding of disturbed soil for either temporary or final construction conditions shall be in accordance with Article 23.06.03 Temporary Hydroseeding and Article 23.08. Hydroseeding, of these Specifications.

D. Erosion control blankets for either temporary or final construction conditions shall be in accordance with Article 23.09. Erosion Control Blanket, of these Specifications.

E. All fill material shall be imported from a quarry. Before the fill material is transported to the project site, the Contractor shall submit for review and approval the material quality test plan to verify that the proposed quarry fill materials meets the requirements in this Article. The Contractor shall not assume that any on-site soils can be re-used as fill.

24.01.03.03. Placement

A. After clearing and grubbing in accordance with Article 23.02. Clearing and Grubbing, of these Specifications, all surfaces to receive channel embankment (fill) shall be scarified to a minimum depth of 12 inches or as directed by the Engineer, moisture conditioned, and mechanically compacted to a relative compaction of not less than 92 percent. The field compaction moisture content shall be within the range of 1% to 3% above the optimum moisture content, as determined from the ASTM D1557 test. Soils within the upper 1 foot of the excavated foundation subgrade shall be compacted to at least 92 percent relative compaction as determined from the ASTM D1557 test. The ASTM D1557 laboratory compaction tests should be performed at the time of construction to provide a proper basis for compaction control. The subgrade for at the Planting Areas, as shown on the Drawings shall not be scarified.

B. The ASTM D1557 laboratory compaction tests must be performed on representative soil samples of channel embankment material just before fill placement to provide a proper basis for field compaction quality control. Testing of channel embankment materials shall be in accordance with Article 23.01.04. Testing.

C. Channel embankment shall be placed in the configurations shown on the Drawings, where horizontal benches are angled slightly. Channel embankment placed on slopes of existing creek steeper than 4:1 (horizontal to vertical) shall be keyed and benched into the creek bank. The frequency and location of the benches may be adjusted and modified in the field with the approval of the Engineer. Channel Embankment shall be placed in 8-inch maximum vertical lifts, measured before compaction, in horizontal layers with a minimum width of 6 feet. This specified width may be any combination of new fill plus cut into existing slope, except that a minimum cut of 4 feet into existing slope per layer of fill shall be made. The channel embankment side slopes shall be overbuilt a minimum of 1 foot and subsequently trimmed to design section after placement of fill has been completed.

D. Unless otherwise indicated in the Drawings or specified herein, all channel embankment shall be compacted to minimum 92 percent relative compaction at a moisture content of 1 to 3 percent above optimum as determined by the ASTM D1557 laboratory compaction test.

E. The Contractor shall ensure that compaction operations do not damage any existing utilities. Any damage caused by the Contractor's operation shall be repaired at the Contractor's expense.

F. The Contractor shall not place channel embankment construction material until the Contractor's surveyor has taken cross sections after dewatering and clearing and grubbing of the area to be excavated has been performed as specified in Articles 23.05. Control of Water, and 23.02. Clearing and Grubbing, of these Specifications respectively, are completed.

G. If the top or contact surfaces of a partial fill section become too dry to permit suitable bond between the additional fill to be placed, the Contractor shall scarify the dried materials to such depths as may be directed by the Engineer, shall moisture condition the scarified material to an acceptable moisture content, and shall compact this layer in accordance with the applicable requirements of these Specifications.

H. If the top or contact surface of a partial fill section become too wet to permit suitable bond and the additional fill to be placed, the wet material shall be scarified and permitted to dry, assisted by discing or harrowing, if necessary, to such depths as may be directed by the Engineer. The material shall be dried to an acceptable moisture content, and shall be compacted in accordance with the applicable requirements of these Specifications.

I. Contractor shall not place Channel Embankment in standing water or when the subgrade is excessively wet, creating soft pumping conditions. Any necessary watering, aeration, or processing of fill material, or bridging of foundation soils, or by other means to obtain the required compaction shall not constitute an extra item of work and no direct or additional payment will be made therefore.

J. Ponding or Jetting to achieve compaction will not be permitted.

K. In access areas where high groundwater creates soft pumping conditions, the Contractor may construct working a platform as specified in Article 24.01.01.03.F. Working Platform.

L. Hydroseeding shall be placed in accordance with Article 23.08. Hydroseeding, of these Specifications.

M. Erosion control blankets shall be placed in accordance with Article 23.09. Erosion Control Blanket, of these Specifications.

24.01.03.04. Testing

A. Laboratory compaction testing shall be performed by the Contractor. Prior to imported quarry fill placement and compaction of native scarified subgrade, the Contractor's quality control representative shall take representative samples of imported fill and native subgrade to perform the following laboratory testing. ASTM D1557 laboratory compaction tests must be performed for import and native scarified subgrade materials. For imported channel embankment fill, a minimum of five ASTM D1557 tests shall be performed for every 1,000 cubic yards of material placed, to form a family of curves which will be utilized to estimate optimum properties (maximum dry density and optimum water content) to be used with field density tests. Each ASTM D1557 test samples shall also be tested for soil gradation (ASTM D422), atterberg limits (ASTM D4318) and soil classification (ASTM D2487). At any time during fill placement, if the Channel Embankment materials do not meet the specified material requirements, the Contractor's quality control representative shall notify the Engineer, and the Contractor must remove the deficient material immediately.

B. Contractor shall perform field density tests to ensure that the desired relative compaction has been achieved. The ASTM D6938 (Standard Test Method for In-Place Density and Water Content of Soil and Soil-Aggregate by Nuclear Methods (Shallow Depth)) or ASTM D1556 (Standard Test Method for Density and Unit Weight of Soil in Place by the Sand-Cone Method) shall be performed at the time of construction. Testing shall be done for every lift at 100 feet spacing or as approved by the Engineer. Contractor shall mark proposed testing locations for the approval of the District's on-site inspector.

C. Any area that does not meet minimum relative compaction requirements shall be reworked and re-compacted until relative compaction tests meet the minimum requirements. This applies to imported quarry fill and in-situ native subgrade materials. All costs for such required rework and re-compaction of materials, including costs for retesting, shall be included in the items of work being performed by the Contractor.

D. The Engineer may request additional tests if there is a reason to doubt the adequacy of the material quality, compaction, or special compaction procedures used, or if the District's on-site inspector determines that the Contractor's testing is inadequate in specific areas of concern.

24.01.03.05. Submittals

A. Contractor shall submit and received approval of a material quality test plan for the imported quarry fill to be used as channel embankment before the material is hauled in for the project. The material quality test plan must include the quarry source, source location, volume of materials expected from source, sample location, depth, number of samples, and sample collection methods for the Engineer to review and approve. Sample collection and testing shall be performed upon receiving Engineer's approval for the sampling plan. Upon completion of all the necessary tests a report with all the laboratory test results and a plan identifying the locations of the import source that can be used as channel embankment and/or levee fill shall be presented to the Engineer for review and approval. Material quality tests shall conform to Article 24.01.03.02. Materials.

B. Prior to imported quarry fill placement and/or compaction of scarified native subgrade, the Contractor's must submit laboratory testing results provided under Article 24.01.03.04 paragraph A Testing to the Engineer for review and approval. At any time during fill placement, if the Channel Embankment materials do not meet the specified material requirements, the Contractor's quality control representative shall notify the Engineer, and the Contractor must remove the deficient material immediately.

C. During placement of imported quarry fill, Contractor shall submit all quality control test results to the Engineer, which may or may not be limited to, the daily compaction test results during earthwork operations and laboratory test results that demonstrate that the material and quality control requirements are met. Supervision of soil sampling, tests, and report preparation shall be by a

professional geotechnical engineer licensed in the State of California. All reports shall bear said geotechnical engineer's signature and stamp. Copies of all field and laboratory test results and report shall be distributed to the Engineer shall be within 48 hours after completion.

D. For imported Channel Embankment fill, the Contractor shall submit an "Imported Material Certification Form" (see Appendix F) for each imported source of channel embankment fill material.

24.01.03.06. Measurement

A. Finish grade surface elevations and measurements shall conform to the tolerances specified in Article 15.04. Construction Survey, of these Specifications.

B. Channel embankment shall be measured in cubic yards and represents materials to be placed after clearing and grubbing.

C. The grade line prior to embankment construction will be determined by the second set of cross sections provided by the Contractor and accepted by the Engineer as described in Article 24.01. Channel Excavation, of these Specifications. After channel embankment work is complete, the Contractor's Surveyor will take a third set of cross sections. Measurement for channel embankment will be determined by the average end area method in cubic yards utilizing the second and third sets of cross sections taken by the Contractor's Surveyor that can be verified by the Engineer, excluding the volume associated with structural backfill per Article 24.05.06. Measurement.

24.01.03.07. Payment

A. Full compensation for furnishing all labor, materials, tools, equipment and incidentals, and for doing all work required for channel embankment construction**,** meeting the requirements in Article 24.01.03.02. Materials, including stripping, overbuilding embankment and trimming to design section, constructing working platform if required, surveys, quality control testing, placing fill, and compaction, as shown on the Drawings, as specified in these Specifications and as directed by the Engineer, shall be considered as included in the unit price bid per cubic yard for CHANNEL EMBANKMENT, Bid Item No. 13, if authorized by the District.

B. Full compensation for furnishing all labor, materials, tools, equipment and incidentals, and for doing all work required for geotextile filter fabric as shown on the Drawings, as specified in these Specifications and as directed by the Engineer, shall be included in the unit price bid per cubic yard for CHANNEL EMBANKMENT, Bid Item No. 13, if authorized by the District.

C. Full compensation for furnishing all labor, materials, tools, equipment and incidentals and for doing all work required to install Hydroseeding and Erosion Control Blanket, as shown on the Drawings, as specified in these Specifications, and as directed by the Engineer shall be considered as included in the lump sum

price bid for COMPLIANCE WITH NPDES GENERAL PERMIT, Bid Item No. 1, if authorized by the District.

D. Costs incurred for repair or replacement of bare, sparse, or damaged areas of erosion control shall be considered as included in the lump sum price bid for COMPLIANCE WITH NPDES GENERAL PERMIT, Bid Item No. 1, and no separate payment will be made therefor.

E. No additional payment will be made for multiple applications of hydroseeding and erosion control blankets in the same work area.

24.02. Trench Excavation

24.02.01. Scope of Work

A. Trench excavation shall consist of providing all work required to excavate for the installation of new storm drain modifications, utility relocations, and retaining wall and floodwall subsurface drainage systems as shown on the Drawings, as specified in these Specifications, and as specified by the Engineer.

B. Contractor shall determine the location of existing utilities and protect and maintain all underground and aboveground utilities encountered.

C. Trench excavation shall not begin until the Contractor has submitted the “Proposed Trench Excavation Plans,” per Article 8.05. Excavation Safety Plans, and the Engineer has returned said plan indicating “In Receipt of.”

D. The Contractor's attention is directed to Article 16.02. Utilities, Article 16.05. Rights of Way, Article 16.06. Access to Properties Owned by Others, Article 4.10. Preservation of Property, and Article 4.11. Contractor’s Responsibility for Work, of these Specifications and Section 7-1.02K(6) Occupational Safety and Health Standards, of the State Specifications.

E. During installation of the utilities or systems requiring trenching, the Contractor shall provide temporary shoring systems as necessary to support the sides of the excavation and trenches. This shoring shall prevent any ground movement, which may damage adjacent property or structure, damage or delay the work, or endanger life and health. The Contractor shall design, install, maintain, and remove temporary shoring systems as required by CAL-OSHA and other applicable government regulations and agencies.

F. Existing material in the bottom of the trench that is unsuitable for supporting the utility pipelines shall be excavated and replaced with suitable permeable material in accordance with Article 24.07. Permeable Material, of these Specifications. The excavation shall be free of standing water and loose or disturbed material before fill or concrete placement. Fill shall be placed immediately after excavation and subgrade observation.

G. Contractor shall provide for the visual inspection of the trench excavation to alert the Engineer of any presence of soil contamination by regulated materials.

24.02.02. Material/Placement

A. Trenches shall be excavated in conformance with Article 8.05. Excavation Safety Plans, of these Specifications.

B. The Contractor is solely responsible for excavation safety, including support to all adjacent improvements. The Contractor is also solely responsible for trench dewatering as set forth in Article 23.05. Control of Water, of these Specifications.

C. Trenches shall be excavated to a minimum of 6 inches below the final pipe invert. Trenches shall be excavated to allow proper compaction of pipe bedding and backfill material as set forth in Article 24.03. Trench Backfill, of these Specifications.

D. All excess and unsuitable excavated material shall be removed from the right of way and legally disposed of by the Contractor. Excavated materials that are temporarily stored on site shall be placed at a distance greater than the trench depth away from the top of the slope, or at a minimum distance of five (5) feet from the top of the trench, whichever is greater.

E. Trenches for utilities within City of Milpitas Right-of-Way shall be excavated per the requirements of the City of Milpitas Standard Plans and Specifications and the encroachment permit.

24.02.03. Testing

A. No special requirements.

24.02.04. Submittals

A. Proposed Trench Excavation Plans shall be supplied per Article 8.05 Excavation Safety Plan, of these Specifications.

B. The Contractor’s attention is directed to Article 24.11. Shoring, of these Specifications, for all shoring systems and submittal requirements to be used during trench excavation.

C. For a trench excavation more than 5 feet in depth, submit shop drawings for a protective system per Section 7-1.02K(6) Occupational Safety and Health Standards, of the State Specifications.

24.02.05. Measurement

A. Trench excavation will not be measured.

24.02.06. Payment

A. Full compensation for furnishing all labor, materials, tools, equipment and incidentals, and for doing all work required for trench excavation, including shoring, if required, shall be considered as included in the lump sum or unit prices bid for the items of work which require Trench Excavation, and no separate payment will be made therefor.

B. The volume of trench excavation includes that quantity of pavement, sidewalk, and curb and gutter which shall be removed as described in these Specifications. The longitudinal limit of trench excavation shall be measured along the pipe axis through buried valves and tapers, exclusive of structure excavation and excavation for tunnels, unless otherwise stated. Trench sections are considered to have sides as shown on the Drawings and no payment will be made for overexcavation or reexcavation unless unsuitable subgrade material in encountered and the Engineer directs the Contractor to remove the unsuitable material.

24.03. Trench Backfill

24.03.01. Scope of Work

A. Trench Backfill shall consist of all backfill required to restore excavated trenches to a finished grade that conforms to the surrounding existing ground, to the subgrade elevations within roadways, or to the finish grade elevations as shown on the Drawings, as specified in these Specifications, and as directed by the Engineer.

24.03.02. Materials

A. For utilities owned by the City of Milpitas or with their right of way (i.e. storm drain, water, sanitary sewer), pipe bedding and pipe embedment material shall be compacted ¾ inch Class 2 aggregate base (AB) as specified in the City of Milpitas Standard Plan No. 220. Native materials, sand, or pea gravel shall not be used as bedding material. Trench backfill above the pipe bedding and initial backfill shall be compacted ¾ inch Class 2 AB. Material for utility trenches within City of Milpitas Right-of-Way shall be per the requirements of the City of Milpitas Standard Plans and Specifications.

B. For all other utilities in the District's right of way, such as the storm drain extensions, pipe bedding and pipe embedment material shall be flowable fill of Controlled Low Strength Material (CLSM) up to a minimum of 12 inches over the crown of the pipe. Flowable fill or CLSM shall be between 40 to 80 psi compressive strength after 28 days curing time. Trench backfill above the flowable fill shall be channel embankment material. Channel embankment material and placement shall be in accordance with Article 24.01.03. Channel Embankment, of these Specifications.

24.03.02.01. Placement

A. Trench backfill within City of Milpitas right-of-way shall be per the requirements of the latest version, City of Milpitas Standard Plan No. 220 and Specifications.

B. Flowable fill or CLSM shall be monitored to ensure that the slurry flows into and occupies all voids around the buried pipe. Vibration may be necessary to ensure that the slurry flows into the openings around the pipe. The consistency of the flowable fill or CLSM shall have a spread of 8 to 12 inches in accordance with ASTM D 6103, Flow Consistency of CLSM. Contractor shall monitor for pipe floatation during placement of flowable fill and may need to place the fill in thin lifts or weigh/restrain the pipe to prevent flotation. After the initial set of the flowable fill or CLSM, or about 3 to 4 hours, trench backfill may be placed.

C. In all stages of the trench backfilling operation, the Contractor shall limit both method and equipment so as to not damage the integrity of the pipe or related facilities or induce a diametrical variation of greater than plus or minus 0.5 percent.

D. Jetting or ponding to achieve compaction will not be permitted.

24.03.02.02. Testing

A. Testing of soil backfill shall be in accordance with Article 24.05. Structural Backfill, of these Specifications.

B. Flowable fill or CLSM shall be tested in accordance with ASTM D 6103, Flow Consistency of CLSM and ASTM D 4832, Compressive Strength of Cylindrical Concrete Specimens. Compressive testing shall be performed at 7 and 28 days curing time. A minimum of three cylinders shall be prepared for each sampled bath. Compressive strength shall be performed for every 600 linear feet of pipe placed.

24.03.02.03. Submittals

A. Submittals for soil backfill materials shall be in accordance with Article 24.05. Structural Backfill, of these Specifications.

B. For imported Trench Backfill, the Contractor shall submit an “Imported Material Certification Form” (see Appendix F) for each imported source of trench backfill material.

C. Submittals for flowable fill or CLSM shall be 1) a mix design in accordance with the material and testing requirements for flowable fill or CLSM, and 2) test results for flow consistency, and 3) test results for compressive strength at 7 and 28 days.

24.03.02.04. Measurement

A. Trench backfill will not be measured.

24.03.02.05. Payment

A. Full compensation for furnishing all labor, materials, tools, equipment, and incidentals and for doing all work for trench backfill, including bedding and Channel Embankment, as shown on the Drawings, as specified in these Specifications, and as directed by the Engineer shall be considered as included in the lump sum or unit price bid for items of work which require Trench Backfill, and no separate payment will be made therefor.

24.04. Structural Excavation

24.04.01. Scope of Work

A. Structural Excavation shall consist of all work and materials necessary to excavate for the construction of all concrete structures including retaining walls floodwalls, headwalls, foundations, concrete transition structures, etc. as shown on the Drawings, as specified in these Specifications, and as directed by the Engineer.

B. Structural Excavation shall not begin until the Contractor has submitted “Proposed Structural Excavation Plans” to the Engineer for review and acceptance.

C. Structural Excavation shall conform to the applicable provisions of Section 19-3 Structural Excavation and Backfill, of the State Specifications, except as modified by these Specifications. The provisions of Section 19-1.03D Buried Man-made Objects, of the State Specifications shall not apply.

D. The Contractor shall provide shoring required for structural excavation in accordance with Article 24.11. Shoring, of these Specifications.

E. The geotechnical report by Cal Engineering & Geology noted that the historic high groundwater at the site is within the upper 10 feet and can vary throughout the year. The report also provides groundwater information from monitoring wells at several locations throughout the project site. The Contractor shall make themselves aware of this groundwater information and use this information as part of the development of their Control of Water Plan. Refer to Article 13.04. District-Furnished Reports, for the reports.

F. The Contractor shall be prepared to handle high groundwater as part of the excavation and earthwork elements of the project. The Contractor is advised that the subgrade may be positioned below the groundwater level or in areas which have been subjected to standing water. Prior to starting structural excavation, the Contractor shall conduct pilot holes down to the elevation of the structural excavation for every 500 feet of flood wall to determine the groundwater

conditions. If groundwater is encountered in any part of the foundation, the groundwater shall be controlled in accordance with Article 23.05. Control of Water.

24.04.02. Materials

A. Structural excavation in excess of that needed for channel embankment and structural backfill shall be removed from the project site and recycled. If recycling of material is not available, the material shall be disposed of in an area provided by the Contractor.

B. Replacement of material that is not suitable for structural backfill shall conform to the requirements of Article 24.06. Unsuitable Materials, of these Specifications.

C. Unnecessary excavation by Contactor below the specified elevation of the channel or structural excavation limit and not required for unsuitable material removal shall become the property of the Contractor.

24.04.03. Placement

A. Removal, disposal, and replacement of unsuitable material and buried man-made objects shall conform to the requirements of Article 24.06. Unsuitable Materials, of these Specifications.

B. Groundwater shall be expected during structural excavation and controlled in accordance with Article 23.05.01. Control of Water Within Existing Course. Soft and loose, saturated native soil deposits may be encountered at the excavation bottom (creek bed/maintenance road). In such cases, working conditions at the bottom of the excavation may become difficult; equipment used at the bottom of the excavation may lose mobility. The Contractor shall take adequate measures to minimize the disturbance of the sensitive deposits at the excavation subgrade. The Contractor may minimize the disturbance of sensitive deposits or mitigate existing soft ground conditions by constructing a working platform at the bottom of the excavation. The working platform may be installed by:

1. Over-excavating 18 inches below the planned subgrade;

2. Placing a stabilizing subgrade enhancement geotextile at the bottom of the resulting excavation;

3. Backfilling with 3/4-inch crushed rock or other such approved bridging material; and

4. Overlapping the ends of the subgrade enhancement geotextile on top of the bridging material for a minimum distance of 2 feet. The imported and on-site bridging materials and sources should be approved by the District's Geotechnical Engineer prior to importing and placing the materials on the project site. The top of the bridging layer shall be densified by vibratory compaction equipment. The Contractor's method

of compacting the bridging layer shall be reviewed by the Geotechnical Engineer.

5. At the end of construction, the Contractor shall remove any working platforms adjacent to a revegetation bench and replace the entire area at full depth with soil material meeting the requirements of Article 24.01.02.02. Materials. The Contractor shall place this soil in accordance with Article 24.01.02.03. Placement.

C. The bottom of the excavation for the floodwalls and retaining walls may encounter moist to wet materials, depending on the groundwater table at the time of construction. After excavations have been made, exposed surface soils shall be scarified to a minimum depth of 8 inches and compacted to 92 percent relative compaction at a moisture content of 1 to 3 percent over optimum as determined by ASTM D1557. The finished compacted subgrade shall be firm and non-yielding.

D. The Contractor may use other methods of subgrade stabilization. The Contractor's proposed method shall be reviewed and approved by the District's Geotechnical Engineer prior to implementation.

E. The Contractor is solely responsible for structural excavation safety and providing shoring systems as indicated as required in accordance to Article 24.11. Shoring, of these Specifications.

F. Care shall be exercised to prevent structural over-excavation. Structural over-excavated areas, except as directed by the Engineer, shall be backfilled with suitable material in conformance with Article 24.05. Structural Backfill, of these Specifications, at the Contractor's expense.

G. No debris, exposed tree roots, or other objectionable materials shall be permitted in the final cut section.

H. Care shall be exercised to protect existing facilities as well as not to undermine the channel structure during structure excavation. The Contractor's attention is directed to Article 16.03. Protection of Existing Improvements, of these Specifications.

24.04.04. Testing

A. No special requirements for testing.

24.04.05. Submittals

A. Proposed Structural Excavation Plans shall be supplied per Article 8.05. Excavation Safety Plan, of these Specifications.

B. The Contractor's attention is directed to Article 24.11. Shoring, of these Specifications, for all shoring systems to be used during structural excavation.

C. The Contractor's attention is directed to Article 23.05. Control of Water, of these Specifications, for control of creek water and groundwater to be implemented during structural excavation.

24.04.06. Measurement

A. The quantity for Structural Excavation shall not be measured. Limits of Structural Excavation shall be as shown in the Drawings and as described in Section 19-3.04 Payment, of the State Specifications, except as modified by these Special Provisions.

24.04.07. Payment

A. Full compensation for furnishing all labor, materials, tools, equipment, and incidentals and for doing all work required for structural excavation, as shown on the Drawings, as specified by these Specifications, and as directed by the Engineer including control of water and shoring shall be considered included in the lump sum or unit price bid for the items of work that require Structural Excavation, and no separate payment will be made therefor.

24.05. Structural Backfill

24.05.01. Scope of Work

A. Structural Backfill shall consist of all work and materials necessary to furnish, place, spread, moisture condition, compact, test, and grade earth material around the structural facilities required under this Contract including aggregate base beneath the structural facilities as shown on the Drawings.

B. The use of imported soils within the project limits for Structural Backfill shall conform to applicable provisions of Section 19-3.02 Materials, of the State Specifications. All imported soils used as structural backfill shall be uncontaminated and not contain regulated materials.

24.05.02. Materials

A. Structural backfill must have a sand equivalent value of at least 20 and shall conform to the provisions of section 19-3.02 Materials, of the State Specifications, except as modified in these Specifications.

B. Aggregate base to be placed under footings shall be Class 2, 3/4-inch maximum size, conforming to Section 26-1.02B Class 2 Aggregate Base, of the State Specifications. Aggregate base shall be from virgin crushed rock and shall not contain any recycled materials.

24.05.03. Placement

A. Placement of Structural Backfill shall conform to the provisions of Section 19-3.02C Structure Backfill, of the State Specifications, except as modified in these Specifications.

B. Structural Backfill and aggregate bases, where required under foundations shall have at least 95% relative compaction.

C. Structural backfill shall not be placed on or against concrete less than 7 days after placement or on concrete with less than 70 percent of the required design strength, without prior approval of the Engineer. Crawler type tractors, vibratory equipment and other similar compaction equipment shall not be used within 4 feet of any completed or partially completed structure. Compaction within 4 feet of the structure shall be accomplished by the use of mechanical hand tampers, vibrating plates, or other approved methods and equipment. Structural backfill within 4 feet of structures shall be placed in 4-inch maximum vertical lifts, measured before compaction.

D. Ponding or jetting to achieve compaction will not be permitted.

E. Finish grade for structural backfill shall be as shown on the Drawings or as required to conform to adjacent ground elevations.

24.05.04. Testing

A. The ASTM D1557 laboratory compaction tests should be performed for each different structural backfill materials being used. Each ASTM D1557 test samples shall also be tested for soil gradation (ASTM D422), atterberg limits (ASTM D4318), and soil classification (ASTM D2487). Individual test results shall be used to determine whether compaction of an area meets minimum requirements in lieu of an averaging method.

B. Field compaction tests shall be performed by the Contractor. Any area that does not meet minimum compaction requirements shall be removed and re-compacted until compaction tests meet the minimum requirements. All costs for such required removal and re-compaction of materials, including costs for retesting, shall be borne by the Contractor.

C. Contractor shall perform field density tests to ensure that the desired relative compaction has been achieved. The compaction moisture content of the fill shall be within a range of -2% to +2% of the optimum moisture content. The ASTM D6938-10 (Standard Test Method for In-Place Density and Water Content of Soil and Soil-Aggregate by Nuclear Methods (Shallow Depth)) or ASTM D1556-07 (Standard Test Method for Density and Unit Weight of Soil in Place by the Sand-Cone Method) shall be performed at the time of construction. Testing shall be done for every lift of uncompacted materials or as approved by the Engineer. Contractor shall mark proposed testing locations for the approval of the District's on-site inspector.

D. The Engineer may request additional tests if there is a reason to doubt the adequacy of the compaction, or special compaction procedures are used, or materials change or if the District's on-site inspector determines that the Contractor's testing is inadequate in areas of concern.

24.05.05. Submittals

A. For imported Structural Backfill, the Contractor shall submit an "Imported Material Certification Form" (see Appendix F) for each imported source of structural backfill material.

B. Contractor shall submit ASTM D1557 laboratory compaction test, ASTM D422 soil gradation test, ASTM D4318 Atterberg limits test, ASTM D2487 soil classification test for each source of structural backfill and receive a favorable review by the Engineer before transporting any materials to the project site.

24.05.06. Measurement

A. The quantity for structural backfill shall not be measured. Limits of structural backfill shall be as described in Section 19-3.04 Payment, of the State Specifications, except as modified by these Special Provisions.

24.05.07. Payment

A. Full compensation for furnishing all labor, materials, tools, equipment, dewatering and incidentals, and for doing all work required for imported structural backfill, including furnishing, testing, and placing structural drainage, aggregate base and backfill material as shown on the Drawings, as specified in these Specifications, and as directed by the Engineer, and any necessary moisture conditioning of backfill material to obtain the required compaction shall be considered included in the lump sum or unit price bid for the item of work which requires Structural Backfill and no separate payment will be made therefor.

24.06. Unsuitable Materials

A. Unsuitable Materials, as used in these Specifications shall refer to soil that does not meet the requirements for Channel Embankment, Trench Backfill, and Structural Backfill as specified in Article 24.01.03. Channel Embankment, and Article 24.03 Trench Backfill, and Article 24.05. Structural Backfill, respectively that may be encountered in the native soil during excavation for the various items of work. When deemed unsuitable material by the Engineer, such soils shall be removed as directed by the Engineer. Subgrade preparation including scarification, moisture conditioning and compaction of native soil in support of new fills will not be considered unsuitable materials.

24.06.01. Scope of Work

A. The Contractor is alerted to the possibility of the existence of unsuitable materials, which may not be shown on the Drawings. The following provisions

shall apply, regardless of whether the unsuitable materials are shown or not shown on the Drawings.

B. If, in the opinion of the Engineer, unsuitable materials are encountered within the limits for structural or channel excavation, they shall be removed and disposed of outside of the project limits. Where over-excavation has occurred to remove unsuitable materials, the over-excavated area shall be backfilled with Channel Embankment or Structural Backfill.

C. Unnecessary excavation by Contactor below the specified elevation of the channel or structural excavation limit and not required for unsuitable material removal shall become the property of the Contractor.

D. The Contractor shall provide the Engineer evidence that a disposal site for Unsuitable Material has been obtained and is a legal site.

24.06.02. Materials

A. Unsuitable Materials shall be replaced by Channel Embankment or Structural Backfill material that is compacted and tested in accordance with the requirements for backfill as specified in Article 24.01.03.04 Testing, or Article 24.05.04 Testing, of these Specifications.

24.06.03. Placement

A. Contractor shall remove unsuitable materials as directed by the Engineer.

B. Unsuitable materials removed shall be removed from the right of way within 24 hours.

C. Excess moisture content in the foundation material or channel bottom is not by itself sufficient cause of determining that the material is unsuitable. Contractor shall control moisture to an optimal level per Article 23.05. Control of Water, of these Specifications to the satisfaction of the Engineer prior to requesting Engineer's determination on classification of the soil as unsuitable. Preparation of the foundation to receive material and stabilization of the channel bottom to allow efficient and safe operation of equipment and use of labor shall be the responsibility of the Contractor. The Contractor may elect to excavate and replace suitable base material to facilitate compaction and/or stabilization at no additional costs. If the Contractor elects to remove and replace suitable foundation material, it shall be at its own expense and at no additional cost to the District.

24.06.04. Testing

A. Testing required for determining suitability of materials shall be provided by the Contractor.

24.06.05. Submittals

A. Contractor shall submit test results of determination of the backfill material's suitability.

24.06.06. Measurement

A. Excavation of unsuitable materials that were removed per the Engineer's direction shall be measured in the field by the Contractor's Surveyor per Article 15.04. Construction Survey, of these Specifications.

24.06.07. Payment

A. Payment for the removal of unsuitable materials, if encountered, and removed per this Article, and replacement of said unsuitable material per this Article, including excavation, off haul, testing, disposal, disposal fees, and any necessary watering of backfill material to obtain the required compaction shall be considered as included in the unit piece bid per cubic yard for CHANNEL EXCAVATION, Bid Item No. 11, if authorized by the District, and no separate payment will be made therefor.

24.07. Permeable Material

24.07.01. Scope of Work

A. Permeable material shall consist of all work and materials necessary to furnish, place, and compact permeable materials including drain rock, as shown on the Drawings, as specified in these Specifications and as directed by the Engineer.

24.07.02. Materials

A. Permeable material shall conform to Class 1, Type B permeable material as specified in Section 68-2.02F Permeable Material, of the State Specifications.

24.07.03. Placement

A. Excavation for the placement of permeable material shall conform to Article 24.01.01. Channel Excavation, and Article 24.04. Structural Excavation, of these Specifications.

B. Permeable material shall not be placed until the subgrade has been inspected and approved by the Engineer.

C. Permeable material shall be placed uniformly in layers 8 inches deep. The permeable material shall be placed in a manner to avoid segregation of particle sizes and to ensure the continuity and integrity of all zones. No foreign materials shall be allowed to become intermixed with or otherwise contaminate the permeable materials.

D. The Contractor shall not allow permeable material to spill over into non-designated areas, including planting areas.

24.07.04. Testing

A. Permeable material gradation shall be sampled at the site and tested by the Contractor.

B. Any difference of opinion between the Engineer and the Contractor shall be resolved by checking the gradation of the truckload of permeable material.

C. Mechanical equipment, a sorting site, and labor needed in checking gradation shall be provided by the Contractor, at Contractor's expense.

24.07.05. Submittals

A. The Contractor shall provide a certified test report on the sieve analysis certifying the gradation requirements for the permeable material are met.

24.07.06. Measurement

A. The quantity of permeable material will not be measured.

24.07.07. Payment

A. Full compensation for furnishing all labor, materials, tools, equipment and incidentals and for doing all work required for placing permeable material and for providing mechanical equipment and a sorting site for testing as shown on the Drawings, as specified in these Specifications, and as directed by the Engineer shall be considered as included in the lump sum or unit price bid for the items of work which requires permeable material, and no separate payment will be made therefor.

24.08. Geotextile Fabric

24.08.01. Scope of Work

A. Geotextile fabrics shall consist of all work and materials necessary to furnish and place geotextile fabrics for structure drainage and other application between the soil and rock material or between the soil and aggregate base or permeable material as shown on the Drawings, as specified in these Specifications, and as directed by the Engineer.

24.08.02. Materials

A. The geotextile fabric for structure drainage between the soil and permeable rock material shall be a Class A nonwoven fabric conforming to Section 96-1.02B Filter Fabric, of the State Specifications.

B. Filter fabric for rock rip-rap protection shall be a Class 10 nonwoven fabric conforming to Section 96-1.02I Rock Slope Protection Fabric, of the State Specifications.

C. The geotextile fabric for a working platform during Channel Excavation or where unstable ground is encountered shall be Class B1 Subgrade Enhancement Geotextile fabric conforming to Section 96-1.02O Subgrade Enhancement Geotextile, of the State Specifications.

24.08.03. Placement

A. The geotextile fabrics shall be ultraviolet ray (UV) protected, covered within ten (10) days from time of placement, and shall not be stored in an area directly exposed to sunlight prior to installation.

B. The geotextile fabrics shall be handled and placed in accordance with the manufacturers' recommendations, these Specifications, and as directed by the Engineer. These Specifications shall take precedence over the manufacturer's recommendations.

C. The surfaces on which the geotextile fabrics are to be installed shall be free of loose or extraneous material and sharp objects, graded smoothly, and compacted prior to placement of the fabric. Appropriate adjustments to the grade shall be made as required.

D. The geotextile fabric will be placed directly on the prepared area, in intimate contact with the subgrade, and free of folds or wrinkles. The geotextile will not be walked on or disturbed when the result is a loss of intimate contact between the to-be-placed material and the geotextile or between the geotextile and the subgrade. The geotextile filter fabric will be placed so that the upstream strip of fabric overlaps the downstream strip. The longitudinal and transverse joints will be overlapped at least two (2) feet. The geotextile will extend at least one (1) foot beyond the top and bottom revetment termination points, or as required by the Engineer.

E. Fasten fabric with staples flush with the adjacent fabric to prevent movement of fabric by placement of inert ground cover.

F. Any damage of the geotextile fabrics during placement as a result of the Contractor's negligence shall be repaired or replaced, as directed by the Engineer, by the Contractor at the Contractor's own expense.

24.08.04. Testing

A. No special requirements.

24.08.05. Submittals

A. Manufacturers catalog information for selected products and a detailed description of the installation procedure of the geotextile fabric shall be submitted for the Engineer's approval.

24.08.06. Measurement

A. The quantities of geotextile fabric will not be measured.

24.08.07. Payment

A. Full compensation for furnishing all labor, materials, tools, equipment and incidentals and for doing all work required to install geotextile fabrics, as shown on the Drawings, as specified in these Specifications, and as directed by the Engineer shall be considered as included in the lump sum or unit price bid for the items of work which require the use of Geotextile Fabrics, and no separate payment will be made therefor.

24.09. Rock Protection – Bid Item No. 14

24.09.01. Scope of Work

A. Rock protection will consist of all work, materials, equipment, and incidentals to complete the installation of rock protection along the channel bottom and slope, at the channel transitions, upstream and downstream of the bridges as shown on the Drawings and as specified in these Specifications. This also includes the structural excavation, structural backfill for preparing subgrade to install rock protection and the material and placement of geotextile fabric between the soil and rock materials.

B. Any mechanical equipment, a sorting site, and labor needed in checking gradation shall be provided by the Contractor at the Contractor's expense.

24.09.02. Materials

A. Rock protection along the channel bottom shall be the "300 lb" class for Method B placement, and shall conform to the provision of Article 72-2. Rock Slope Protection, of the State Specification, unless otherwise approved by the Engineer. "300 lb" rock shall also have the following requirements:

1. Rock will be block shaped, predominantly angular, and roughly equi-dimensional, with a length not more than 2.5 times the width or thickness, as measured at the middle of the rock. The rock will be hard, durable, and abrasion resistant quarry or talus rock, free from seams, cracks, cleavage planes, and laminations.

2. The rock will be gray, brown, or have a weathered exterior surface. White or very light-colored rock is not acceptable.

3. All rock shall have a specific gravity of at least 2.5 and a minimum durability of 52.

B. The Engineer will make a visual inspection of the rock material stockpiled to verify conformance with the material specifications.

C. Geotextile filter fabric shall conform to the provisions of Article 24.08. Geotextile Fabric, of these Specifications.

24.09.03. Placement

A. Rock protection along the channel bottom with “300 lb” rock shall be placed by “Placement Method B” in accordance with Article 72-2.03C. Placement Method B, of the State Specifications and arranged to provide a reasonably well graded mass of rock with minimum possible percentage of voids. The rock armor will be trimmed and rearranged to remove protrusions and to provide complete and uniform coverage. The larger rocks will be well distributed throughout the entire mass. Pockets of small rocks and clusters of large rocks will be avoided.

B. Structural excavation shall be in accordance with Article 24.04. Structural Excavation, of these Specifications.

C. Structural backfill shall be placed in accordance with Article 24.05. Structural Backfill, of these Specifications. Geotextile filter fabric shall be placed between soil and rock. Placement shall conform to the provisions of Article 24.08. Geotextile Fabric, of these Specifications.

24.09.04. Testing

A. No special requirements.

24.09.05. Submittals

A. The Contractor shall provide the Engineer with directions and access to the site of the rock material source at least 3 days before delivery of the rock to the project site.

B. The Contractor shall submit to the Engineer for approval the Product Data for the rock and geotextile filter fabric in accordance with Article 7.05. Submittals to be Furnished by the Contractor, of these Specifications.

24.09.06. Measurement

A. The quantities of rock protection will not be measured.

24.09.07. Payment

A. Full compensation for furnishing and placing “300 lb” rock protection along the channel bottom and channel slope and furnishing all labor, materials, tools, equipment, and incidentals for doing all work required for the construction of the

rock protection complete, in place as shown on the Drawings, as specified in these Specifications, and as directed by the Engineer shall be considered as included in the lump sum price bid for ROCK PROTECTION, Bid Item No.14, if authorized by the District.

24.10. Wood Mulch

24.10.01. Scope of Work

A. Wood mulch will consist of all work, materials, equipment, and incidentals to complete the installation of wood mulch at the area as shown on the Drawings and as specified in these Specifications. This also includes preparing subgrade and grading to install wood mulch and placement of geotextile fabric between the soil and wood mulch material.

24.10.02. Materials

A. Wood mulch shall be redwood chip mulch per Section 20-5.04B(3) Wood Chip Mulch, of the State Specifications.

B. Geotextile filter fabric shall conform to the provisions of Article 24.08. Geotextile Fabric, of these Specifications.

24.10.03. Placement

A. Geotextile filter fabric shall be placed in accordance with the provisions of Article 24.08.03. Placement, of these Specifications.

B. Wood mulch shall be placed in accordance with the provisions of Section 20-5.04C Construction, of the State Specifications.

24.10.04. Measurement

A. The quantities of wood mulch will not be measured.

24.10.05. Payment

A. Full compensation for furnishing and placing wood mulch and furnishing all labor, materials, tools, equipment, and incidentals for doing all work required for the construction of the wood mulch complete, in place as shown on the Drawings, as specified in these Specifications, and as directed by the Engineer shall be considered as included in the lump sum or unit price bid for the items of work which requires wood mulch, and no separate payment will be made therefor.

24.11. Shoring – Bid Item No. 15

24.11.01. Scope of Work

A. Shoring or excavation support shall be designed, furnished and installed by the Contractor as shown in the Drawings, and where necessary in accordance with

Cal-OSHA requirements. The shoring system shall prevent any ground movement which may damage adjacent facilities, including, but not limited to; pavement, utilities, properties or structures; damage or delay of work; or endanger life and health. Shoring systems shall consist of all work and materials necessary to provide temporary shoring, including but not limited to solider pile and lagging, bracing, temporary slopes, and other means and procedures to provide excavation support and protection.

B. Shoring is required to protect the existing concrete floodwall on the north property line along Milpitas Materials Company. The shoring system shall prevent any movement of the existing floodwall during the demolition of the existing U-frame channel and construction of the new floodwalls. There are existing waterlines behind and on top of the existing floodwall that are utilized by Milpitas Materials Company that shall be protected in place.

C. The Contractor shall be responsible for designing, furnishing, maintaining, and removing excavation support and protection for the project. It is the Contractor's responsibility for scheduling and coordinating the Work of subcontractor's, suppliers, and other individuals or entities performing or furnishing any of Contractor's Work.

D. The Contractor's attention is directed toward Article 8.05. Excavation Safety Plans, Article 4.10. Preservation of Property, Article 4.11. Contractor's Responsibility for the Work, Article 16.04. Monitoring Surveys, and Article 16.05. Rights of Way, of these Specifications, and Section 7-1.02K(6) Occupational Safety and Health Provisions, of the State Specifications.

E. Installation and/or removal of piles and shoring walls with vibratory or impact equipment is not permitted due to the proximity of residential and commercial buildings.

F. Provide excavation support and protection:

1. Where, as result of excavation, work and analysis are performed pursuant to general engineering design practice.

2. Excavated face or surrounding soil mass may be subject to slides, caving, or other types of failures.

3. Stability and integrity of structures and other improvements may be compromised by settlement or movement of soils, or changes in soil load on structures and other improvements.

4. For trenches 5 feet and deeper.

5. For trenches less than 5 feet in depth, when there is a potential cave-in.

6. Where indicated on the Drawings.

G. For safe and stable excavations, use appropriate design and procedures for construction and maintenance to minimize settlement of supported ground and to prevent damage to structures and other improvements.

H. Dewatering within the creek and during excavations shall be in accordance with Article 23.05. Control of Water.

I. The use of ground anchors, soil nailing or other similar passive restraint system is prohibited for shoring adjacent to Milpitas Materials Company and bridge structures.

24.11.02. Materials

A. Shoring shall be designed for all live and dead loads, including but not limited to surcharge and traffic loads that may be imposed.

B. Shoring for the existing concrete wall on the north property line along Milpitas Materials Company shall be designed for all live and dead loads, including surcharge and the following concrete truck traffic loads:

1. Concrete trucks weigh a total of 70 kips, 60 kips of the back axle and 10 kips on the front axle.

2. The length between axles on concrete trucks vary between 22 feet - 11 inches and 23 feet - 7 inches.

3. Up to 4 trucks parked, at 30 feet distance apart, along the existing floodwall at a lateral distance of 16 inches from the floodwall.

C. The Contractor shall design, install, and maintain the temporary shoring, bracing, and sloping as required by CAL-OSHA and other applicable governmental regulations and agencies. The Contractor shall employ shoring design that is based on the stresses for various materials of construction contained in California Building Code (CBC) latest edition. The shoring system shall be designed to be relatively rigid and with as many supports and struts as necessary to prevent excessive straining and deformation of the supported soils. Trench shield (boxes) or similar passive shoring systems shall not be used as exclusive methods of support.

D. Contractor is hereby made aware that slope ratios recommended by OSHA are for temporary, un-surcharged slopes for adequately dewatered excavations.

E. When lumber is used in shoring elements, the Contractor shall furnish structural grade planks, beams, and posts as defined and specified for stress-grade lumber in the American Lumber Standards for particular application. Lumber may be rough, untreated, in random lengths, and shall be of standard dimensions.

F. Design shoring for an excavation depth of at least 3 feet deeper than required for each structure as indicated on the Drawings to allow for possible over excavation of soils.

G. Minimum safety factor used for design shall not be less than 1.5.

H. The calculated minimum depth of penetration of shoring below the bottom of the excavation shall be increased not less than 30 percent if the full value of passive pressure is used in the design.

I. The maximum height of cantilever shoring above the bottom of excavation shall not exceed 15 feet:

1. Use braced shoring when the height of shoring above the bottom of excavation exceed 15 feet.

J. The maximum total deflection at any point (horizontal or vertical) on the shoring shall not be more than ½ inch at ground surface and less than 1 inch at any location along the shoring. Deflection monitoring shall be submitted per Article 24.11.05. Submittals.

K. When soldier pile and lagging is used as shoring:

1. Provide lagging over the full face of the excavation. Joints between pieces of lagging shall be tight to prevent loss of soil.

2. Provide full face lagging all around penetrations through the lagging.

3. If the soldier piles are installed in predrilled holes, the predrilled holes shall be filled with gravel backfill after the soldiers piles are installed.

4. Fill voids behind lagging with gravel or other material acceptable to the Engineer.

24.11.03. Placement

A. The Contractor shall install shoring and bracing for trench and structure excavation progressively as the removal of excavated material requires per CAL-OSHA and other applicable government regulations and shall install wales and struts at close intervals to prevent displacement of the surrounding earth thus maintaining safe conditions in the work area. Any damage proven to result from improper installations shall be the responsibility of the Contractor.

B. Installation and/or removal of piles and shoring walls with vibratory or impact equipment is not permitted due to the proximity of residential and commercial buildings.

C. Shoring for formwork and cast-in-place concrete shall be removed per the ACI 318 (latest edition) requirements.

D. The Contractor shall remove the temporary shoring when no longer needed. The Contractor may reuse temporary shoring but shall not leave in place any portion of the shoring system.

E. Where loss of soil occurs, plug gap in shoring and replace lost soil with fill material acceptable to Engineer.

F. Contractor shall establish survey control points on shoring and on structures and other improvements in vicinity of excavation for measurement of horizontal and vertical movement. Contractor shall perform horizontal and vertical survey and measurement of control points at least twice every week.

G. Where survey measurements and observations indicate possibility of failure or excessive movement of excavation support, determined in accordance with general engineering design practice, Contractor shall notify the Engineer and take appropriate action immediately.

24.11.04. Testing

A. Shoring will not be tested.

24.11.05. Submittals

A. Do not begin work on excavations, trenches, and means for providing stability of excavation and trenches until submittals have been favorably reviewed by Engineer and until materials necessary for installation are on site. Submit submittals a minimum of 45 Days prior to the scheduled date to begin excavation work.

B. The Contractor shall submit two (2) sets of complete calculations and design drawings, showing a plan layout and shoring detail of all shoring systems for the Engineer's review. Contractor shall field verify the design to ensure the shoring can be installed as shown on their plan layout. The calculations and Drawings shall be signed and stamped by a civil or structural engineer registered in the State of California. Construction shall not proceed without the Engineer's review of the Contractor’s calculations and Drawings. Submittals shall be in accordance with Articles 8.05. Excavation Safety Plans, and 7.05. Submittals to be Furnished by the Contractor, of these Specifications.

C. The Contractor shall submit a monitoring plan to the Engineer prior to constructing shoring system(s) to survey and record the movements of any existing structures being shored. The monitoring plan must include the location of surveyed control points and schedule of measurements. All shoring surveys must be performed by a licensed Land Surveyor registered in California.

1. As part of the monitoring plan, the Contractor shall submit deflection monitoring reports in accordance with Article 24.11.02 Materials, every two weeks for the northern u-frame channel wall along the Milpitas Materials Company property line.

D. Review by the Engineer of the calculations and Drawings or inspection performed by the Engineer will not relieve the Contractor for full responsibility for the design, installation, and maintenance of shoring systems.

E. Prior to applying any loading on the shoring, the Contractor's engineer shall inspect the installation and certify in writing that the shoring system conforms to the Drawings and that the material and workmanship is satisfactory. The certification shall be provided to the District and be available on the project site in accordance with Article 1717. Falsework and Vertical Shoring, Title 8 of the California Administrative Code.

24.11.06. Measurement

A. Shoring will not be measured.

24.11.07. Payment

A. Full compensation for designing, furnishing all labor, materials, tools, equipment and incidentals, and for doing all work required for shoring and excavation support and protection, development of the shoring monitoring plan, and the implementation of shoring monitoring including surveying and monitoring reports, as specified in these Specifications, as shown on the Drawings, shall be considered as included in the lump sum price bid for SHORING, Bid Item No.15, if authorized by the District.

THIS PAGE INTENTIONALLY LEFT BLANK

SECTION 25. SURFACING AND PAVEMENTS

25.01. Exterior Flatwork Within City Right of Way—Bid Item No. 16

25.01.01. Scope of Work

A. Concrete curb and gutter, sidewalk and driveway shall consist of all work, labor, equipment, and materials necessary to install facilities at grade as shown on the Drawings and as specified in these Specifications. This also includes raised truncated domes and the asphalt concrete pavement restoration adjacent to the gutter line.

B. Work within the City of Milpitas right-of-way shall adhere to the encroachment permit and any City standards, notifications, inspections, and testing required by the City. Contractor shall coordinate public works inspections for work within City of Milpitas right of way or City owned facilities. The City's public works inspector shall be notified a minimum of 48 hours prior to any work within the City's right of way or City owned facilities. Contact information for the public works inspector will be provided in the encroachment permit. Inspection hours are from 7 a.m. to 4 p.m. weekdays.

C. Sidewalk work done on both sides of the street cannot be done simultaneously. One side shall remain open to pedestrians.

D. During sidewalk construction, alternative pedestrian access or 1 week advance notice of sidewalk closure shall be provided.

E. Removal and dispose of existing concrete sidewalk, driveway, curb and gutter, and asphalt concrete pavement adjacent to the gutter line including cutting existing asphalt concrete pavement shall be paid for under Bid Item No. 9, Demolition and Disposal, of these Specifications.

F. Quality control testing under Article 25.01.04 will be performed by the District's testing firm.

25.01.02. Materials

A. Reinforcing steel shall be per Section 52 Reinforcement, of the State Specifications.

B. Portland Cement Concrete, within City of Milpitas right-of-way, shall be Class "A" per Section 9.01 of the City of Milpitas Standard Specifications for Roadway and Storm Water Improvements.

C. Aggregate base material shall be ¾ inch maximum, Class 2 Aggregate Base per Section 26 Aggregate Bases, of the State Specifications.

D. Pavement restoration within the City of Milpitas right-of-way, shall conform to Article 25.05. Asphalt Concrete, of these Specifications.

E. Handicap ramp at the street corner of Hanson Court and North Milpitas Boulevard shall have a detectable warning surface, 4’-0” width and 3’-0” depth of the ramp. Detectable warning surface shall conform to the details on the Drawings. Additionally, truncated dome shall be “Armorcast Product Company”, or approved equal, color to be “black” to contrast with sidewalk concrete, subject to the review and approval of the City of Milpitas Engineer. The detectable warning panel shall be installed by wet set installation method, with the largest panel size available by the approved manufacturer. Glue-on or bolt down detectable warning panel installation method shall not be used. The edge of the detectable warning surface nearest the street shall be between 6” and 8” from the gutter flowline.

25.01.03. Placement

A. Subgrade within the City of Milpitas right-of-way shall be prepared per Section 9.02 of the City of Milpitas Standard Specifications for Roadway and Storm Water Improvements.

B. Curb and gutter within the City of Milpitas right-of-way shall be constructed in locations shown on the Drawings in conformance with City of Milpitas Standard Drawing No. 410 Curb and Gutter, Section 73 Concrete Curbs and Sidewalk, of the State Specifications, and these Specifications.

C. Sidewalk within the City of Milpitas right-of-way shall be constructed in locations shown on the Drawings in conformance with City of Milpitas Standard Drawing No. 425 Industrial Sidewalk, Section 73 Concrete Curbs and Sidewalk, of the State Specifications, and these Specifications.

D. Driveway within the City of Milpitas right-of-way shall be constructed in locations shown on the Drawings in conformance with City of Milpitas Standard Drawing No. 432 Commercial/Industrial Driveway with Flares, Section 73 Concrete Curbs and Sidewalk, of the State Specifications, and these Specifications.

E. Pavement restoration within the City of Milpitas right-of-way shall be constructed in locations shown on the Drawings in conformance with City of Milpitas Standard Drawing No. 222 and Article 25.05. Asphalt Concrete, of these Specifications.

F. Aggregate base shall be placed under all curbs and gutters, sidewalks and driveways per the Drawings, City of Milpitas standard details and specifications, and these Specifications.

G. Aggregate Bases placement shall be per Section 26 Aggregate Bases, of the State Specifications.

H. Asphalt concrete pavement placement shall conform to Article 25.05. Asphalt Concrete, of these Specifications.

25.01.04. Testing (To Be Performed by District)

A. The District's testing firm shall perform and report testing results to the Engineer and, if required, to the City of Milpitas.

B. Compaction and sampling shall be per Section 9 of the City of Milpitas Standard Specifications for Roadway and Storm Water Improvements.

C. Aggregate bases testing shall be per Section 26 Aggregate Bases, of the State Specifications.

25.01.05. Submittals

A. Submittals for the PCC and AC mix design shall be in accordance with Section 9.01 of the City of Milpitas Standard Specifications for Roadway and Storm Water Improvements.

25.01.06. Measurement

A. EXTERIOR FLATWORK WITHIN CITY RIGHT OF WAY shall not be measured.

25.01.07. Payment

A. Full compensation for furnishing all labor, materials, tools, equipment and incidentals for doing all work required for installation of sidewalk, driveway, curb and gutter, and asphalt concrete restoration complete, in place as shown on the Drawings, as specified in these Specifications, and as directed by the Engineer, shall be included in the lump sum price bid for EXTERIOR FLATWORK WITHIN CITY RIGHT OF WAY, Bid Item No. 16, if authorized by the District.

25.02. Maintenance Road and Maintenance Access—Bid Item No. 17

25.02.01. Scope of Work

A. Maintenance road and maintenance access shall consist of all work, materials, labor and equipment necessary to construct maintenance road and maintenance access including their foundation, filter fabric, aggregate base, header board edging, drywell, Articulated Concrete Block (ACB) and appurtenances, at the locations as shown on the Drawings, as specified in these Specifications, and as directed by the Engineer. This also includes resurfacing aggregate base pavement for existing maintenance road between Arizona Avenue and Drop Structure as shown on the Drawings, as specified in these Specifications, and as directed by the Engineer.

25.02.02. Materials

A. Aggregate base material shall be ¾ inch maximum, Class 2 Aggregate Base per Section 26 Aggregate Bases, of the State Specifications. The material for Class 2 Aggregate Base shall come from virgin rock. Recycled Class 2 Aggregate Base is not permitted.

B. The material for excavation and backfill for preparing aggregate maintenance road and access subgrade shall be in conformance with Article 24.01.01. Channel Excavation, and Article 24.01.03. Channel Embankment, of these Specifications.

C. ACB shall conform to the provisions in Article 25.04. Articulated Concrete Block, of these specifications.

D. Geotextile fabric shall conform to the provisions in Article 24.08. Geotextile Fabric, of these specifications.

E. Drywell shall conform to provision in Article 25.06. Drywell, of these specifications.

F. Header board edging shall conform to Section 20-5.02B(2) Header Board Edging, of the State Specifications.

G. The material shall be approved by the Engineer before it is placed

25.02.03. Placement

A. Excavation for placement of armoring aggregate shall conform to Section 19-2 Roadway Excavation, of the State Specifications.

B. Backfill for preparing aggregate maintenance road subgrade shall be in conformance with Article 24.01.03. Channel Embankment, of these Specifications.

C. Placement of the geotextile fabric shall be in accordance with Article 24.08. Geotextile Fabric, of these specifications.

D. Placement of the ACB shall be in accordance with Article 25.04. Articulated Concrete Block, of these specifications.

E. Placement of the drywell shall conform to Article 25.06.03. Placement, of these specifications.

F. Placement of header board edging shall be in accordance with Section 20-5.02C Construction, of State Specifications.

G. Aggregate base placement shall conform to Article 25.03. Aggregate Base, of these specifications.

H. The surface of the maintenance roads and maintenance accesses shall conform to the tolerances specified in Article 15.04. Construction Survey, of these Specifications.

I. The underlying surface of the maintenance road and ramps shall be rolled by the Contractor to a firm and compacted condition using weighted drums or other compaction equipment prior to placement of the armoring aggregate material.

J. After placement, the armored aggregate material shall be rolled by the Contractor to a firm and compacted condition. The final surface of the armored aggregate shall be in a drivable condition subject to the approval of the Engineer. Areas deemed not drivable shall be rolled and compacted again until approved by the Engineer.

25.02.04. Testing

A. Testing for Class 2 Aggregate Base materials shall be in accordance with Article 25.03. Aggregate Base.

B. Testing for ACB shall be in accordance with Article 25.04. Articulated Concrete Base.

C. Testing for Drywells shall be in accordance with Article 25.06. Drywell.

25.02.05. Submittals

A. Submittals for Class 2 Aggregate Base materials shall be in accordance with Article 25.03. Aggregate Base.

B. Submittals for ACB shall be in accordance with Article 25.04. Articulated Concrete Base.

C. Submittals for Drywells shall be in accordance with Article 25.06. Drywell.

25.02.06. Measurement

A. The quantities for maintenance road and maintenance access shall not be measured.

25.02.07. Payment

A. Full compensation for furnishing all labor, materials, tools, equipment and incidentals, and for doing all work required for constructing maintenance road, maintenance access, and resurfacing aggregate base pavement between Arizona Avenue and Drop Structure, including their foundation, filter fabric, aggregate base, header board edging, drywell, Articulated Concrete Block (ACB) and appurtenances complete in place as shown on the Drawings, as specified in these Specifications and as directed by the Engineer, shall be included in the lump sum price bid for MAINTENANCE ROAD AND MAINTENANCE ACCESS, Bid Item No. 17, if authorized by the District.

25.03. Aggregate Base

25.03.01. Scope of Work

A. Aggregate base shall consist of all work, materials, labor and equipment necessary to construct aggregate base on top of the finished graded plane as

shown on the Drawings, as specified in these Specifications, and as directed by the Engineer.

25.03.02. Materials

A. Aggregate base material shall be ¾ inch maximum, Class 2 Aggregate Base per Section 26 Aggregate Bases, of the State Specifications.

B. The rock for aggregate base shall have a minimum specific gravity of 2.40 in accordance with California Test Method No. 206 and a minimum durability index of 35 in accordance with California Test Method No. 229.

C. The material shall come from virgin rock and shall be approved by the Engineer before it is placed.

D. Recycled aggregate base materials will not be permitted.

25.03.03. Placement

A. The material shall be approved by the Engineer before it is placed as armoring aggregate. Placement of the armoring aggregate and required compaction shall be in accordance with Section 26 Aggregate Bases, of the State Specifications.

25.03.04. Testing

A. Compaction tests shall be performed by the Contractor. Any area that does not meet minimum compaction requirements shall be removed and re-compacted until compaction tests meet the minimum requirements. All costs for such required removal and re-compaction of materials, including costs for retesting, shall be borne by the Contractor. The ASTM D1557 laboratory compaction tests shall be performed for each aggregate base coarse materials being used. Each ASTM D1557 test samples shall also be tested for soil gradation (ASTM D422).

B. Contractor shall perform field density tests to ensure that the desired relative compaction has been achieved. The ASTM D6938 (Standard Test Method for In-Place Density and Water Content of Soil and Soil-Aggregate by Nuclear Methods (Shallow Depth)) or ASTM D1556 (Standard Test Method for Density and Unit Weight of Soil in Place by the Sand-Cone Method) shall be performed at the time of construction. Testing shall be done for every lift of uncompacted materials or as approved by the Engineer. Contractor shall mark proposed testing locations for the approval of the District's on-site inspector.

C. The rock for aggregate base shall be tested in accordance with California Test Method No. 206 and California Test Method No. 229.

25.03.05. Submittals

A. Contractor shall submit for each source providing armoring aggregate, in advance of its use on the project, the source gradation and quality parameters showing they meet the requirement specified in these Specifications.

25.03.06. Measurement

A. The quantities for aggregate base shall not be measured.

25.03.07. Payment

A. Full compensation for furnishing all labor, materials, tools, equipment and incidentals, and for doing all work required for constructing the aggregate base complete in place as shown on the Drawings, as specified in these Specifications and as directed by the Engineer, shall be included in the lump sum price bid for MAINTENANCE ROAD AND MAINTENANCE ACCESS, Bid Item No. 17, if authorized by the District.

25.04. Articulated Concrete Block

25.04.01. Scope of Work

A. Articulated Concrete Block (ACB) shall consist of all work, materials, labor and equipment necessary to construct ACB, at the locations designated for ACB (also known as concrete cell blocks or cellular concrete mat) on the Drawings and as specified by these Specifications. For these specifications, ACB may also be referred to as “concrete cell blocks” or “cellular concrete mats.”

25.04.02. Materials and Equipment

A. General

1. ACB materials shall be the ArmorFlex brand (supplied by Contech Construction Products, Contech Engineered Solutions), UltraFlex brand (supplied by Basalite Concrete Products), Shoreblock SD Series (supplied by Shoretec, LLC.), or approved equal. In order for the District to accept a substitution, the product must clearly show that it meets the performance requirements specified in these Drawings and Specifications and must be approved by the Engineer prior to installation.

2. All cellular concrete mats shall be prefabricated as an assembly of concrete blocks, with specific hydraulic capacities, laced with revetment cables. Cellular concrete mats may be assembled on-site by hand-placing the individual units either with or without subsequent insertion of cables.

3. Individual units in the system shall be staggered and interlocked for enhanced stability. The mats shall be constructed of closed cell units as

shown on the Drawings. Parallel strands of cable shall extend through two (2) cable ducts in each block allowing for longitudinal binding of the units within a mat. Each row of units shall be laterally offset by one-half of a block width from the adjacent row so that any given block is cabled to four other blocks (two in the row above and two in the row below).

4. Each block shall incorporate interlocking surfaces that minimize lateral displacement of the blocks within the mats when they are lifted by the longitudinal revetment cables. The interlocking surfaces must not protrude beyond the perimeter of the blocks to such an extent that they reduce the flexibility or articulation capability of the cellular mats or become damaged or broken when the mats are lifted during shipment or placement. Once the mats are in place, the interlocking surfaces shall minimize the lateral displacement of the blocks even if the cables should become damaged or removed. The mats must be able to flex a minimum of 18 degrees between any given row or column of blocks in the uplift direction and a minimum of 45 degrees in the downward direction.

5. The cables inserted into the mats shall form lifting loops at one end of the mat with the corresponding cable ends spliced together to form a lifting loop at the other end of the mat. The Engineer shall approve appropriate sleeves for use in order to splice the lifting loop. The cables shall be inserted after sufficient time has been allowed for the concrete to complete the curing process.

6. The cellular concrete mats of ACB Closed Cell shall be placed on compacted aggregate base, which will be above the geotextile filter fabric as shown on the Drawings. Under no circumstances shall the geotextile filter fabric be affixed (i.e., chemically bonded to the blocks) to the mattress in a manner which would jeopardize the functionality of the geotextile filter fabric. Specifically, the geotextile filter fabric shall be independent of the block system.

7. Certification (Open-Channel Flow*):* Cellular concrete mats must be accompanied by documented hydraulic performance characteristics that are derived from tests under controlled flow conditions. Testing guidelines shall conform to ASTM D 7277-08, Standard Test Method for Performance Testing of Articulating Concrete Block (ACB) Revetment Systems for Hydraulic Safety in Open Channel Flow, as amended and updated. Note that all hydraulic performance testing shall be performed in a 2H:1V flume. Analysis and interpretation of the test data shall conform to ASTM D 7276-08, Standard Guide for Analysis and Interpretation of Test Data for Articulating Concrete Block (ACB) Revetment Systems for Hydraulic Safety in Open Channel Flow, as amended and updated.

8. Performance (Open-Channel Flow): The design of the cellular concrete mats shall use a minimum safety factor of 1.5. In order to analyze the performance of the unit, the hydraulic information listed below is required:

TABLE 25.04-1
ACB Hydraulic Information

Design Volumetric Flow Rate (ft^3/sec)	5,600
Maximum Velocity (ft/sec)	7.60
Maximum Shear Stress (lb/ft^2)	0.82
Friction of Bed Slope (ft/ft)	See Drawings
Side Slope (_H:1V)	See Drawings
Allowable Unit Protrusion (in)	0.25

9. The cellular concrete mats of ACB shall comply with AASHTO HS20-44 live loading.

B. Cellular Concrete Blocks

1. This specification covers erosion control mats used in revetments for soil stabilization.

2. Note 1—Concrete units covered by this specification are made from lightweight or normal weight aggregates, or both.

3. Note 2—The values stated in U.S. customary units are to be regarded as the standard.

C. Materials

1. *Cementitious Materials*: Materials shall conform to the following applicable ASTM specifications:

2. *Portland Cements*: Specification C 150, for Portland Cement.

3. *Blended Cements*: Specification C 595, for Blended Hydraulic Cements.

4. *Hydrated Lime Types*: Specification C 207, for Hydrated Lime Types.

5. *Pozzolans*: Specification C 618, for Fly Ash and Raw or Calcined Natural Pozzolans for use in Portland Cement Concrete.

6. Aggregates shall conform to the following ASTM specifications, except that grading requirements shall not necessarily apply.

7. *Normal Weight*: Specification C 33, for Concrete Aggregates.

8. Sand must meet gradation requirements for ASTM C-33 Fine Aggregate Concrete Sand. AASHTO M-6 gradation is also acceptable. Sand must be silica based; no limestone based products shall be used. Sand must be clean; natural, unwashed sand deposits shall not be used. Manufactured sand or stone dust is not acceptable under any circumstances. Sand substitutions such as Diabase and Graystone #10

are not acceptable. No calcium carbonated or dolomitic sand substitutions are acceptable.

D. Casting

1. The concrete units shall be produced by a dry cast method. The dry cast units obtain strength in a shorter duration as well as an increase in the durability and overall quality of product.

E. Physical Requirements

1. At the time of delivery to the work site, the units shall conform to the physical requirements prescribed in Table 25.04-2 below.

TABLE 25.04-2
Physical Requirements

Compressive Strength Net Area Min. p.s.i. (mPa)		Water Absorption Max. lb/ft^3 (kg/m^3)	
Avg. of 3 units	**Individual Unit**	**Avg. of 3 units**	**Individual Unit**
4,000 (27.6)	3,500 (24.1)	9.1 (160)	11.7 (192)

2. Units will be sampled and tested in accordance with ASTM D 6684-04, Standard Specification for Materials and Manufacture of Articulating Concrete Block (ACB) Revetment Systems.

F. Visual Inspection

1. All units shall be sound and free of defects that would interfere with either the proper placement of the unit or impair the performance of the system. Surface cracks or surface chipping resulting from handling in shipment and delivery shall be deemed grounds for rejection.

2. Cracks exceeding 0.25 inches (.635 cm) in width and/or 1.0 inch (2.54 cm) in depth shall be deemed grounds for rejection.

3. Chipping resulting in a weight loss exceeding 10% of the average weight of a concrete unit shall be deemed grounds for rejection.

4. Blocks rejected prior to delivery from the point of manufacture shall be replaced at the manufacturer's expense. Blocks rejected at the jobsite shall be repaired with structural grout or replaced at the expense of the contractor.

G. Revetment Cable and Fittings

1. Polyester Revetment Cable and Fittings: Revetment cable shall be constructed of high tenacity, low elongating, and continuous filament

polyester fibers. Cable shall consist of a core construction compromised of parallel fibers contained within an outer jacket or cover. The size of the revetment cable shall be selected such that the minimum acceptable strength is at least five (5) times that required for lifting of the mats, in accordance with ASTM D-6684 paragraph 5.5.2.

2. The revetment cable shall exhibit resistance to most concentrations of acids, alkalis, and solvents. Cable shall be impervious to rot, mildew, and degradation associated with marine organisms. The materials used in the construction of the cable shall not be affected by continuous immersion in fresh or salt water.

3. Elongation requirements specified below are based upon stabilized new, dry cable. Stabilization refers to a process in which the cable is cycled fifty (50) times between a load corresponding to $200D^2$ and a load equal to 10%, 20%, or 30% of the cable's approximate average breaking strength. Relevant elongation values are shown in the table below. The tolerance on these values is ±5%.

Elastic Elongation at Percentage of Break Strength	
10%	0.6
20%	1.4
30%	2.2

4. Selection of cable and fittings shall be made in a manner that insures a safe design factor for mats being lifted from both ends, thereby forming a catenary. Consideration shall be taken for the bending of the cables around hooks or pins during lifting. Fittings such as sleeves and stops shall be aluminum and washers shall be plastic unless otherwise shown on the Drawings. **Revetment cable splicing fittings shall be selected so that the resultant splice shall provide a minimum of 75% of the minimum rated cable strength**.

H. Openings

1. Any openings, between cells and between cells and concrete walls shall be backfilled with Class 2 aggregate base and compacted flush with the top of the blocks

I. Size of Cellular Concrete Mats

1. General. The cellular concrete blocks, cables and fittings shall be fabricated at the manufacturer or another approved location into mats with a width of up to eight (8) feet and a length up to forty (40) feet, which is approved by the Engineer.

2. Mat Length. The cellular concrete mats shall have the ability for fabrication in various lengths, widths, and in combinations of length and/or widths. Special mats are a combination of two opposing

dimensions either in the longitudinal or transverse direction of the mats. The special mats are available in various dimensions that allow for a custom fit to a site-specific project.

J. Manufacturer

1. Cellular concrete blocks shall be ARMORFLEX® as manufactured and sold by ArmorTec, UltraFlex™ as manufactured and sold by Submar, or approved equal:

ARMORTEC, A Contech Company
9025 Centre Pointe Dr., Suite 400
West Chester, OH 45069
Phone: 1-800-338-1122
info@conteches.com

Basalite Concrete Products, LLC
605 Industrial Way
Dixon, CA 95620
Phone: 1-800-776-6690
Local Project Contact: Ron Illium, P.E. – 1-916-716-6500

2. The ARMORFLEX®, UltraFlex™, or equal cellular concrete blocks shall have the following nominal characteristics:

TABLE 25.04-3
Standard Sizes of Articulated Concrete Blocks

Class	Type	Height Inches	Lbs/Sq Ft	Open Area %
55	Closed	6.0	54-62	10

* Block height may vary based on local manufacture's capabilities.
** Block weight may vary based upon the specific gravity of local available aggregate material.

25.04.03. Placement

A. Pre-Installation Meeting

1. ACB pre-installation meeting shall be held no later than 60 days before beginning any ACB installation work at the Contractor's onsite office to discuss the installation plan, requirements, procedures, and other elements of ACB installation.

2. Those attending shall include representatives from the Contractor, Engineer, and ACB manufacturer.

3. No ACB installation activity shall be performed until the pre-installation meeting has been held, the Contractor's installation plan has been approved by the Engineer, and all review comments have been resolved.

B. Subgrade Preparation

1. General. All subgrade preparation should be performed in accordance with ASTM D6884-03, Standard Practice for Installation of Articulating Concrete Block (ACB) Revetment Systems.

2. Grading. The slope shall be graded to a smooth plane surface to ensure that intimate contact is achieved between the slope face and the geotextile (filter fabric), and between the geotextile and aggregate base, and between the aggregate base and the entire bottom surface of the cellular concrete blocks. All slope deformities, roots, grade stakes, and stones which project normal to the local slope face must be re-graded or removed. No holes, "pockmarks," slope board teeth marks, footprints, or other voids greater than 0.5 inch in depth normal to the local slope face shall be permitted. No grooves or depressions greater than 0.5 inches in depth normal to the local slope face with a dimension exceeding 1.0 foot in any direction shall be permitted. Where such areas are evident, they shall be brought to grade by placing compacted homogeneous material. The slope and slope face shall be uniformly compacted, and the depth of layers, homogeneity of soil, and amount of compaction shall be as shown on the Drawing, as specified in Article 24.01.03. Channel Embankment, of these Specifications.

3. Loose end revetment cables shall be embedded in a trench below the grade, top surface of the ACB. The anchor trench hinge-point at the top of the slope shall be uniformly graded so that no dips or bumps greater than 0.5 inches over or under the local grade occur. The width of the anchor trench hinge-point shall also be graded uniformly to assure intimate contact between all cellular concrete blocks and the underlying grade at the hinge-point. Trenches shall be compacted to relative compaction as specified in the Article 24.01.03. Channel Embankment, of these specifications.

4. Inspection. Immediately prior to placing the filter fabric aggregate base and cellular concrete blocks, the prepared base, subgrade shall be inspected by the Engineer. No fabric, aggregate base or blocks shall be placed thereon until that area has been approved by the Engineer.

C. Cellular Concrete Blocks/Mats

1. *General.* ACB placement and preparation should be performed in accordance with *ASTM D6884-03, Standard Practice for Installation of Articulating Concrete Block (ACB) Revetment Systems*. The open areas of the ACBs shall be backfilled to the top with Class 2 aggregate base.

2. Cellular concrete block/mats, as specified in Article 25.03.02. Materials, of these Specifications, will be constructed within the specified lines and grades shown on the Drawings.

3. *Placement.* Subgrade prepared for placing cellular concrete blocks shall be in such a manner as to produce a smooth plane surface in intimate contact. No individual block within the plane of placed cellular concrete blocks will protrude more than one-half inch. Cellular concrete blocks should be flush and develop intimate contact with the base grade section, as approved by the Engineer.

4. Proposed hand placing only is to be used in limited areas, specifically identified by the Engineer.

5. If assembled and placed as large mattresses, the cellular concrete mats will be attached to a spreader bar or other approved device to aid in the lifting and placing of the mats in their proper position by the use of a crane or other approved equipment. The equipment used should have adequate capacity to place the mats without bumping, dragging, tearing or otherwise damaging the underlying fabric. The mats will be placed side-by-side and/or end-to-end, so that the mats abut each other. The Contractor shall thread rebar through the cable loops at the ends of each adjacent mat to link them together. Mat seams or openings between mats greater than two (2) inches will be filled with structural concrete, as specified in Article 29.01. Structural Concrete, of these Specifications, or other material approved by the Engineer. Whether placed by hand or in large mattresses, distinct changes in grade that results in a discontinuous revetment surface in the direction of flow will require to backfill with aggregate base at the grade change location so as to produce a continuous surface.

6. Individual unit protrusion shall not exceed 0.25 inches.

7. Termination trenches and side trenches will be backfilled and compacted flush with the top of the blocks. The integrity of the trench backfill must be maintained so as to ensure a surface that is flush with the top surface of the cellular concrete blocks for its entire service life.

8. *Finishing.* The cells or openings in the cellular concrete blocks will be backfilled and compacted with suitable material, as specified on these Specifications. Backfilling and compaction will be completed in a timely manner so that no more than 500 feet of exposed mats exist at any time.

9. Finishing requirements is explicitly at the discretion of the Engineer of Record.

10. *Consultation.* The Contractor shall have the manufacturer of the cellular concrete blocks/mats provide design and construction advice during the

design and initial installation phases of the project as necessary, at the discretion of the Engineer.

25.04.04. Testing

A. The Engineer or authorized representative shall be accorded proper access to facilities to inspect and sample the units at the place of manufacture from lots ready for delivery.

B. Field installation procedures shall comply with the procedures utilized during the hydraulic testing procedures of the recommended system. All system restraints and ancillary components (such as synthetic drainage mediums) shall be employed as they were during testing. For example, if the hydraulic testing installations utilize a drainage layer then the field installation must utilize a drainage layer; an installation without the drainage layer would not be permitted.

C. Hydraulic testing hall be for the thinnest block in a “family” of similar blocks (i.e., same footprint but different thicknesses), with the tested critical shear value at 0° before extrapolation to thicker blocks. Such extrapolation cannot be made from a thicker block to a thinner block.

D. Additional testing, other than that provided by the manufacturer, shall be borne by the Contractor.

25.04.05. Submittals

A. The Contractor shall submit to the Engineer all manufacturers’ hydraulic testing in accordance with ASTM D7277, including all required certifications, in support of the proposed cellular concrete mat system.

B. The Contractor shall furnish the manufacturer’s certificates of compliance for cellular concrete blocks/mats, revetment cable, and any revetment cable fittings and connectors. The Contractor shall also furnish the manufacturer’s specifications, literature, shop drawings for the layout of the mats, and any recommendations, if applicable, that are specifically related to the project.

25.04.06. Warranty

A. Contractor shall provide five (5) years of warranty time for all ACB work, including but not limited to fabrication, installation and materials after completion of the contract work. The Contractor shall replace and repair ACB as needed without any additional cost to the District.

25.04.07. Measurement

A. ACB shall not be measured.

25.04.08. Payment

A. Full compensation for furnishing all labor, materials, tools, equipment and incidentals, and for doing all work required for constructing the ACB complete in place as shown on the Drawings, as specified in these Specifications and as directed by the Engineer, shall be included in the lump sum price bid for MAINTENANCE ROAD AND MAINTENANCE ACCESS, Bid Item No. 17, if authorized by the District.

25.05. Asphalt Concrete

25.05.01. Scope of Work

A. Asphalt Concrete (AC) shall consist of all work and materials necessary to furnish and place Asphalt Concrete at grade for street surfacing, temporary patching, and final restoration as shown on the Drawings and as specified in the Specifications and as directed by the Engineer.

25.05.02. Materials

A. Asphalt concrete shall be Type B in accordance with Section 7.01 Asphalt Concrete, of the City of Milpitas Specifications for Roadway and Storm Sewer Improvements and as shown on the Drawings.

25.05.03. Placement

A. Asphalt concrete shall be placed in accordance with Section 7 Asphalt Concrete Surfacing, of the City of Milpitas Specifications for Roadway and Storm Sewer Improvement and as shown on the Drawings. In accordance with Section 7.01 of the City of Milpitas Specifications, Asphalt Concrete shall conform to Section 39 of the State Specifications.

B. Aggregate grading shall conform to ¾ inch maximum, medium of Section 39 of the State Specifications.

25.05.04. Testing

A. Aggregate gradation tests shall be performed and submitted for review by the Engineer prior to delivery of asphalt concrete to the project site. The Contractor shall perform and report the Bulk Specific Gravity (California Test 308, Method A) and Stabilometer Value (“S” Value) according to the requirements of the State of California Department of Transportation June 2009 Quality Control Manual for Hot Mix Asphalt. The Contractor shall operate the equipment so as to obtain adequate tests.

B. Items of work within City of Milpitas right of way will be tested by the District’s testing firm.

25.05.05. Submittals

A. AC mix design, gradation of aggregates and all certificates of compliance.
B. Bituminous binder certification.

25.05.06. Measurement

A. Asphalt concrete shall not be measured.

25.05.07. Payment

A. Full compensation for furnishing all labor, material, tools, equipment and incidentals and for doing all work required for constructing the asphalt pavement restoration within the City's right of way, complete in place as shown on the Drawings, as specified in these Specifications, and as directed by the Engineer shall be included in the lump sum price bid for EXTERIOR FLATWORK WITHIN CITY RIGHT OF WAY, Bid Item No. 16, if authorized by the District.

25.06. Drywell

25.06.01. Scope of Work

A. Drywell will consist of all work, materials, equipment, and incidentals to complete the installation of drywell at the location as shown on the Drawings and as specified in these Specifications. This also includes structural excavation, structural backfill, permeable material, perforated pipe, cap and geotextile fabric placed between the soil and permeable material.

25.06.02. Materials

A. Structural excavation shall conform to Article 24.04. Structural Excavation, of these Specifications.

B. Geotextile filter fabric shall conform to the provisions of Article 24.08 Geotextile Fabric, of these Specifications.

C. Perforated pipe shall be nominal 4-in, HDPE pipe with 5/8 in holes, 3 holes 120 degree. HDPE pipe shall conform to the provisions of Article 26.02. HDPE Pipe, of these Specifications.

D. Drain grate shall be 4 in, round, structural form plastic, molded in one piece, UV light inhibited and outdoor use.

E. Permeable Backfill Material shall conform to Article 24.07. Permeable Material, of these Specifications.

25.06.03. Placement

A. As shown on the Drawings, excavate drywell, place filter fabric, install perforated pipe, drain cap and backfill drywell with permeable material.

B. Structural excavation shall conform to Article 24.04. Structural Excavation, of these Specifications.

C. Placement of geotextile filter fabric shall conform to the provisions of Article 24.08. Geotextile Fabric, of these Specifications.

D. Placement of perforated pipe shall conform to Section 68-2.03 Construction, of the State Specifications.

E. Placement of permeable Backfill Material shall conform to Article 24.07. Permeable Material, of these Specifications.

25.06.04. Measurement

A. The quantities of drywell will not be measured.

25.06.05. Payment

A. Full compensation for furnishing and placing drywell and furnishing all labor, materials, tools, equipment, and incidentals for doing all work required for the construction of the drywell complete, in place as shown on the Drawings, as specified in these Specifications, and as directed by the Engineer shall be included in the lump sum price bid for MAINTENANCE ROAD AND MAINTENANCE ACCESS, Bid Item No. 17, if authorized by the District.

25.07. Lower Berryessa Creek Trail—Bid Item No. 25

25.07.01. Scope of Work

A. Lower Berryessa Creek Trail shall consist of all work and materials necessary to furnish and place Asphalt Concrete at grade to resurface the existing levee path along Lower Berryessa Creek between N. Abel Street and E. Calaveras Blvd. as shown on the Drawings, as specified in these Specifications, and as directed by the Engineer.

B. The Contractor's attention is directed to Article 19.01 Compliance with NPDES Permit for development and implementation of an individual SWPPP for the Lower Berryessa Creek Trail.

25.07.02. Materials

A. Asphalt concrete shall be Type B in accordance with Section 7.01 Asphalt Concrete, of the City of Milpitas Specifications for Roadway and Storm Sewer Improvements and as shown on the Drawings. In accordance with Section 7.01 of the City of Milpitas Specifications, Asphalt Concrete shall conform to Section 39 of the State Specifications.

B. Aggregate grading shall conform to ¾ inch maximum, medium of Section 39 of the State Specifications.

25.07.03. Placement

A. Asphalt concrete shall be placed in accordance with Section 7 Asphalt Concrete Surfacing, of the City of Milpitas Specifications for Roadway and Storm Sewer Improvement and as shown on the Drawings.

25.07.04. Testing

A. Aggregate gradation tests shall be performed and submitted for review by the Engineer prior to delivery of asphalt concrete to the project site. The Contractor shall perform and report the Bulk Specific Gravity (California Test 308, Method A) and Stabilometer Value ("S" Value) according to the requirements of the State of California Department of Transportation June 2009 Quality Control Manual for Hot Mix Asphalt. The Contractor shall operate the equipment so as to obtain adequate tests.

B. Field testing for Asphalt Concrete will be performed by the District's testing firm.

25.07.05. Submittals

A. AC mix design, gradation of aggregates and all certificates of compliance.
B. Bituminous binder certification.

25.07.06. Measurement

A. Asphalt concrete shall not be measured.

25.07.07. Payment

A. Full compensation for furnishing all labor, material, tools, equipment and incidentals and for doing all work required for constructing the Asphalt Pavement Trail at Lower Berryessa Creek complete in place as shown on the Drawings, as specified in these Specifications, and as directed by the Engineer shall be included in the lump sum price bid for LOWER BERRYESSA CREEK TRAIL, Bid Item No. 25, if authorized by the District.

THIS PAGE INTENTIONALLY LEFT BLANK

SECTION 26. SITE UTILITIES

The Contractor's attention is directed to Article 16.02. Utilities, Article 16.03. Protection of Existing Improvements, Article 16.04. Monitoring Surveys, and Article 16.04.02 Utility Relocations, of these Specifications.

26.01. Site Utilities—Bid Item No. 18

26.01.01. Scope of Work

A. Site Utilities work shall consist of all work and materials necessary to modify existing storm drains and construct new storm drains through walls (this does not include City Storm Drains – see Article 26.03. City Storm Drain Outfall Modifications) and earthen channel slopes, construct shallow gravel basins, cap the existing 4-inch water line, and construct underground facilities to enable the relocation of the existing overhead Comcast line. Work shall include, but not be limited to, furnish and install catch basin, HDPE pipe, pipe caps, perforated pipe, check valves and flap gates, furnish and construct concrete V-ditch, concrete outfall and concrete catch basin, cap existing 4-inch water line, furnish and install Comcast underground conduits, trench backfill, install Comcast pull boxes, restore asphalt concrete pavement within the trench, and all other miscellaneous items of work required to construct or modify site utilities, as shown on the Drawings, in accordance with State Specifications, and these Specifications, and as directed by the Engineer.

B. The Contractor's attention is directed to Article 26.03 City Storm Drain Outfall Modifications for storm drains that are not included in this scope of work.

C. The Contractor's attention is directed to Article 16.02.03 Utility Installations/Relocations by Others and Article 16.02.04 Utility Relocations for coordination with Comcast.

D. Abandonment and removal of existing site utilities including cutting, removing and disposing of existing asphalt concrete pavement for Comcast underground conduits shall be paid for under Bid Item No. 9, Demolition and Disposal, of these Specifications.

E. The Contractor shall field verify the invert elevations, size, and type of all existing storm drain outfalls and pipes shown on the Drawings prior to ordering any materials. Any deviations found shall be presented to the Engineer in writing.

F. Where new storm drain outfalls are located within the low flow channel, as shown in the Drawings, a Tideflex Model 35-1 (or approved equal) shall be installed. Where the new storm drain outfalls are above the low flow channel, as shown in the Drawings, a Waterman Model F-10, Fresno 10C or approved equal shall be installed.

G. The Milpitas Materials Company concrete plant must stay operational throughout construction. Its business hours are Monday-Saturday from 6 a.m. to 6 p.m.

H. Utility boxes owned by the City of Milpitas and other utilities within the project site shall be adjusted to grade.

26.01.02. Materials

A. Pipe excavation and backfill shall conform to Article 24.02. Trench Excavation and Article 24.03. Trench Backfill, of these Specifications. Excavation for the V-ditches shall be in accordance with Article 24.04. Structural Excavation, of these Specifications.

B. Flap gates, where storm drain outfalls are located above the low flow channel, shall be cast iron frame and cover, Waterman F-10, Fresno 10C, or approved equal, with safety bars and fastenings.

C. Check valves, where storm drain outfalls are located within the low flow channel, shall be Tideflex TF-1, or approved equal.

D. Precast catch basins shall be Oldcastle Precast Concrete Catch Basin or approved equal.

E. Rock riprap for rock protection shall be in accordance with Article 24.09. Rock Protection, of these Specifications.

F. Concrete for collars, outfall, V-ditch, catch basin, and drain box as shown on the Drawings, shall be in accordance with Article 29.01. Structural Concrete, of these Specifications.

G. Geotextile fabric shall be in accordance with Article 24.08. Geotextile Fabric, of these Specifications.

H. High Density Polyethylene Pipe (HDPE) shall conform to Article 26.02. HDPE Pipe, of these Specifications.

I. Capping of the existing 4-inch water line shall include filling the abandoned pipe with a Concrete Low Strength Mixture (CLSM) or other equivalent material and plugged with one-foot long concrete in both ends in accordance with City of Milpitas pipeline abandonment requirements. The Contractor shall coordinate with City of Milpitas Public Works Inspector for any other requirements and inspections.

J. Asphalt concrete pavement restoration within the City of Milpitas right-of-way, shall be in accordance with Article 25.05. Asphalt Concrete, of these Specifications.

K. Underground conduit and stub up material for Comcast cables shall be Polyvinyl Chloride (PVC) schedule 80 and 2-inch diameter. Underground installation shall comply with PG&E Greenbook and PG&E Standards S5453, Joint Trench.

L. Bedding sand backfill for Comcast trench shall be Class 2 permeable material as specified in Section 68-2.02F, Permeable Material, of the State Specifications and shall be vibratory compacted in 8 inch lifts.

M. Gutter frame and grate shall be South Bay Foundry SBF 1901 or Phoenix Iron Works #P-6001 or approved equal.

N. Perforated pipe shall be nominal 4-inch, HDPE pipe with 5/8 inch holes, 3 holes 120 degree. HDPE pipe shall conform to the provisions of Article 26.02. HDPE Pipe, of these Specifications.

O. Permeable material shall conform to Article 24.07. Permeable Material of these Specifications.

26.01.03. Placement

A. New or existing pipe at the outfall shall be cut to conform to concrete wall face inclination and earth slopes as shown on the Drawings.

B. Storm drain outfall modifications shall be extended with HDPE Pipe at least 3 inches larger in inside diameter than the existing pipe and cut to conform to concrete wall face inclination and earth slopes as shown on the Drawings.

C. Geotextile fabric shall be installed as shown on the Drawings and in accordance with Article 24.08. Geotextile Fabric, of these Specifications.

D. Catch basins shall be installed in accordance with the City of Milpitas Specifications for Roadway and Storm Sewer Improvements and as shown on the Drawings.

E. Concrete V-ditch shall be placed in accordance with Article 29.01. Structural Concrete, of these Specifications.

F. Rock protection shall be installed in accordance with Article 24.09. Rock Protection, of these Specifications.

G. High Density Polyethylene Pipe (HDPE) shall be installed in accordance with Article 26.02. HDPE Pipe, of these Specifications.

H. The Milpitas Materials Company concrete plant must stay operational throughout construction. Its business hours are Monday-Saturday from 6 a.m. to 6 p.m.

I. Contractor shall coordinate with and install Comcast-furnished pull boxes CCPB #1 and CCPB#2 as shown on the Drawings.

26.01.04. Testing

A. Testing for outfall modifications shall be in accordance with Article 24.03. Trench Backfill, of these Specifications, as directed by the Engineer.

B. Testing for concrete outfall, concrete V-ditch, concrete catch basin, and concrete drain box shall be in accordance with Article 29.01. Structural Concrete, of these Specifications.

26.01.05. Submittals

A. Submittals for backfill material for outfall modifications shall be in accordance with Article 24.03. Trench Backfill, of these Specifications, as directed by the Engineer.

B. Submittals for concrete outfall, concrete V-ditch, concrete catch basin shall be in accordance with Article 29.01. Structural Concrete, of these Specifications.

26.01.06. Measurement

A. Site utilities shall not be measured.

26.01.07. Payment

A. Full compensation for furnishing all labor, materials, tools, equipment and incidentals, and for doing all work required to furnish and install site utilities described in the scope of work of this Article, complete in place as shown on the Drawings, as specified in these Specifications and as directed by the Engineer, shall be paid for the lump sum price bid for SITE UTILITIES, Bid Item No. 18, if authorized by the District.

26.02. HDPE Pipe

26.02.01. Scope of Work

A. HDPE Pipe shall consist of furnishing and installing various sizes High-Density Polyethylene (HDPE) Storm Drain Pipe including all labor materials, tools, equipment, and incidentals and including all work.

26.02.02. Materials

A. Materials used for the manufacture of polyethylene pipe and fittings shall be made from PE 3408 high density polyethylene resin compound meeting cell classification 345464C of PE 3608 or 345434C per ASTM D3350.

B. The pipe and fittings shall meet the requirements of AWWA C906.

C. HDPE pipe shall be rated for use a pressure class of 160 psi meeting the requirements of Standard Dimension Ratio (SDR) 26 as minimum strength.

D. The pipe manufacturer shall certify compliance with the above requirements.

E. Butt Fusion Fittings – Fittings shall be made of HDPE material with a minimum material designation code of PE3408. Butt Fusion Fittings shall meet the requirements of ASTM D3261. Molded and fabricated fittings shall have a

pressure rating equal to the pipe unless otherwise specified on Drawings. All fitting shall meet the requirements of AWWA C906.

F. Marking of molded fittings shall comply with the requirements of ASTM D3261. Fabricated fittings shall be marked in accordance with ASTM F 2206. Socket fittings shall meet ASTM D 2683.

G. HDPE shall have a smooth interior and exterior, not corrugated.

26.02.03. Placement

A. Pipe shall be placed in accordance with Section 10.04 Pipe Laying and Jointing Methods, of the City of Milpitas Specifications.

B. Trench Excavation and backfill shall be per Articles 24.02. Trench Excavation, and Article 24.03. Trench Backfill, of these Specifications.

26.02.04. Testing

A. To assure water tightness, Contractor shall perform field verification pressure testing. All pipe, fittings and accessories shall be installed and tested in accordance with the latest revision of ANSI/AWWA C600. Appropriate safety precautions must be used when field testing any pipe material.

26.02.05. Submittals

A. Contractor shall submit the manufacturer's specifications, product data, installation and testing instructions, and a certificate from the manufacturer that the proposed HDPE storm drain pipe meets the requirements of this Specification.

26.02.06. Measurement

A. HDPE Pipe shall not be measured.

26.02.07. Payment

A. Full compensation for furnishing all labor, materials, tools, equipment and incidentals for doing all work required for furnishing and installing round HDPE Pipe complete, in place, as shown on the Drawings, as specified in these Specifications, and as directed by the Engineer, shall be included in the Contract Price(s) paid for the various items of Work involved, that requires HDPE pipe, and no additional time and payment shall be made therefor.

26.03. City Storm Drain Outfall Modifications—Bid Item No. 26

26.03.01. Scope of Work

A. City Storm Drain Outfall Modifications work shall consist of all work and materials necessary to modify four existing City owned and maintained storm drains and

construct four new City owned and maintained storm drains through concrete walls and earthen channel slopes. Work shall include, but not be limited to, furnish and install HDPE pipe, check valves and flap gates, furnish and construct concrete outfall, and all other miscellaneous items of work required to construct or modify site utilities, as shown on the Drawings, in accordance with State Specifications, and these Specifications, and as directed by the Engineer.

B. The City Storm Drain Outfalls are located at the following stations:

1. 15-inch Storm Drain at E-Line Sta 17+85
2. 18-inch Storm Drain at E-Line Sta 13+30
3. 36-inch Storm Drain at E-Line Sta 33+25
4. 18-inch Storm Drain at E-Line Sta 35+40

C. The Contractor shall field verify the invert elevations, size, and type of all existing City storm drain outfalls and pipes shown on the Drawings prior to ordering any materials. Any deviations found shall be presented to the Engineer in writing.

D. Where new storm drain outfalls are located within the low flow channel, as shown in the Drawings, a Tideflex Model 35-1 (or approved equal) shall be installed. Where the new storm drain outfalls are above the low flow channel, as shown in the Drawings, a Waterman Model F-10, Fresno 10C or approved equal shall be installed.

26.03.02. Materials

A. Pipe excavation and backfill shall conform to Article 24.02. Trench Excavation and Article 24.03. Trench Backfill, of these Specifications.

B. Flap gates, where storm drain outfalls are located above the low flow channel, shall be cast iron frame and cover, shall be Waterman F-10, Fresno 10C, or approved equal, with safety bars and fastenings.

C. Check valves, where storm drain outfalls are located within the low flow channel, shall be Tideflex TF-1, or approved equal.

D. Rock riprap for rock protection shall be in accordance with Article 24.09. Rock Protection, of these Specifications.

E. Concrete for collars and outfall as shown on the Drawings, shall be in accordance with Article 29.01. Structural Concrete, of these Specifications.

F. Geotextile fabric shall be in accordance with Article 24.08. Geotextile Fabric, of these Specifications.

G. High Density Polyethylene Pipe (HDPE) shall conform to Article 26.02. HDPE Pipe, of these Specifications.

26.03.03. Placement

A. New or existing pipe at the outfall shall be cut to conform to concrete wall face inclination and earth slopes as shown on the Drawings.

B. Storm drain outfall modifications shall be extended with HDPE Pipe at least 3 inches larger in inside diameter than the existing pipe and cut to conform to concrete wall face inclination and earth slopes as shown on the Drawings.

C. Geotextile fabric shall be installed as shown on the Drawings and in accordance with Article 24.08. Geotextile Fabric, of these Specifications.

D. Rock protection shall be installed in accordance with Article 24.09. Rock Protection, of these Specifications.

E. High Density Polyethylene Pipe (HDPE) shall be installed in accordance with Article 26.02. HDPE Pipe, of these Specifications.

26.03.04. Testing

A. Testing for outfall modifications shall be in accordance with Article 24.03. Trench Backfill, of these Specifications, as directed by the Engineer.

B. Testing for concrete outfall shall be in accordance with Article 29.01. Structural Concrete, of these Specifications.

26.03.05. Submittals

A. Submittals for backfill material for outfall modifications shall be in accordance with Article 24.03. Trench Backfill, of these Specifications, as directed by the Engineer.

B. Submittals for concrete outfall shall be in accordance with Article 29.01. Structural Concrete, of these Specifications.

26.03.06. Measurement

A. CITY STORM DRAIN OUTFALL MODIFICATIONS shall not be measured.

26.03.07. Payment

A. Full compensation for furnishing all labor, materials, tools, equipment and incidentals, and for doing all work required to furnish and install site utilities described in the scope of work of this Article, complete in place as shown on the Drawings, as specified in these Specifications and as directed by the Engineer, shall be paid for the lump sum price bid for CITY STORM DRAIN OUTFALL MODIFICATIONS, Bid Item No. 26, if authorized by the District.

THIS PAGE INTENTIONALLY LEFT BLANK

SECTION 27. TRAFFIC CONTROL

27.01. Traffic Control

27.01.01. Scope of Work

A. Traffic Control shall consist of all work and materials necessary to maintain traffic and pedestrian access during all stages of the construction as shown on the Contractor's Traffic Control Plan(s) per California Manual on Uniform Traffic Control Devices (CA MUTCD), the Drawings, as specified in these Specifications, and as directed by the Engineer, including:

1. Preparation of, and approval by the City of Milpitas of the Contractor's traffic control plan(s) showing the vehicular traffic and pedestrian access, work zones for any demolition, trenching and excavation, formwork for headwalls at bridge locations, new concrete and asphalt concrete surface, and access into and out of the project site, within the project limits throughout all stages of construction, per this Article, per General Provisions Article 10.10. Traffic Control and per Special Provisions Article 18.06. Traffic Control of these Specifications.

2. Providing flaggers on North Milpitas Boulevard and Arizona Avenue as necessary throughout the construction stages;

3. Providing temporary pavement and trench plating as needed to maintain construction vehicle access; and

4. All other miscellaneous work necessary throughout the construction stages for the project to complete the traffic control as required to complete all items of work.

B. The Contractor's attention is directed to the access point to the Project site off Arizona Avenue. Due to heavy pedestrian use of the sidewalk and roadways during student drop off and pick up times from Milpitas High School, additional traffic control may be required. The bell schedule for Milpitas High School can be found at the following link: https://mhs.musd.org/about-mhs/bell-schedule.

C. When the entering or leaving time of the Contractor's equipment coincide with the children going to or leaving any schools in the area, in addition to providing flaggers, the Contractor shall also provide crossing guards at the Contractor's ingress and egress locations to direct the children crossing the roadway as directed by the Engineer.

D. The Contractor shall maintain proper and adequate traffic control at the project area per the requirements of the City of Milpitas. Contractor's Traffic control plan(s) shall be prepared by a registered Civil or Traffic Engineer and submitted to the Engineer and the City of Milpitas for approval.

E. The Contractor shall cooperate with the City of Milpitas authorities relative to handling traffic around the construction area and shall make arrangements

relative to keeping the working area clear of parked vehicles so as to maintain sight visibility and access to adjacent properties.

F. The Contractor shall conduct operations and schedule cleanup so as to cause the least possible obstruction and inconvenience to traffic, pedestrians, cyclists, nearby schools, and adjacent property owners. All streets and sidewalk areas shall be swept clean in accordance with Article 10.10. Traffic Control, and 11.04.04. Streets, Roadways, Concrete Slabs, Sidewalks, and Paved Areas, of these Specifications.

G. Damage done by the Contractor during the course of work to adjacent city or private property, including sidewalk and driveways leading into the construction site shall be repaired or replaced in kind in accordance with Article 16.05. Rights of Way, of these Specifications, or as directed by the Engineer at the Contractor's own cost.

H. Personal vehicles of the Contractor's employees, and the Contractor's equipment and vehicles shall not be parked on the City of Milpitas traveled way or shoulders at any time. When entering or leaving roadways carrying public traffic, the Contractor's equipment, whether empty or loaded, shall in all cases yield to public traffic and pedestrians and shall travel in the direction of the traffic. Flaggers and traffic signs may be required to control this activity.

I. Those parts of public streets, right of way and sidewalks that are occupied by the Contractor, as approved by the Engineer, shall be immediately vacated and returned to public use when use thereof is no longer necessary for the construction work. For long-term situations where construction work will be delayed for over 30 days, temporary traffic control measures shall be removed and streets restored to public use.

J. Attention is directed to Section 7-1.03 Public Convenience, Section 7-1.04 Public Safety, and Section 12. Temporary Traffic Control, of the State Specifications, and Article 8.01. Public Safety, and Article 17.01. Safety, of these Specifications. Nothing in these Specifications shall be construed as relieving the Contractor from responsibility as provided in said Section 7-1.04 Public Safety, of the State Specifications.

K. During hauling and excavation operations, a traffic lane on a two-lane street may be closed for periods not to exceed 5 minutes. Such traffic sign and flaggers as approved by the City of Milpitas for said lane closure shall be in place prior to closing the lane to traffic. After each closure, all accumulated traffic shall be allowed to pass through the affected area before another closure is permitted.

L. No work that interferes with public traffic shall be performed before 9:00 a.m., nor after 4:00 p.m., except work required under Section 7-1.03 Public Convenience, and Section 7-1.04 Public Safety, of the State Specifications.

M. The Contractor shall coordinate with City of Milpitas authorities and receive their approval if temporary lane closures on North Milpitas Boulevard, Hanson Court, and Arizona Avenue for the Contractor's operation.

N. Temporary lane closures shall consist of closing traffic lanes in accordance with the approved traffic control plan, the provisions of Section 12 Temporary Traffic Control, of the State Specifications, and as specified herein. Temporary lane closures shall be removed when the Contractor is no longer occupying the lane.

O. Contractor is not relieved from the responsibility to provide such additional devices or take such measures as may be necessary to comply with the provisions of Section 7-1.04 Public Safety, of the State Specifications.

27.01.02. Materials

A. Traffic control devices shall be in accordance with Section 12 Temporary Traffic Control, of the State Specifications except as modified herein. If any component in the traffic control system is displaced, or ceases to operate or function as specified, from any cause, during the progress of the work, the Contractor shall immediately repair said component to its original condition or replace said component and shall restore the component to its original location.

B. Construction Area Signs

1. Construction area signs shall conform to Section 12-3.11 Construction Area Signs, of the State Specifications. These signs shall be furnished, installed, maintained and removed when no longer required as shown on the Drawings, in accordance with the provisions in Section 12 Temporary Traffic Control, of the State Specifications and as indicated in the Caltrans Traffic Manual. All signs and other warning devices provided by the Contractor shall become the property of the Contractor after completion of the Contract.

2. During the hours of darkness, as defined in Division 1, Section 280 of the Vehicle Code, portable signs shown on the Drawings to be illuminated shall be, at the option of the Contractor, either illuminated signs in conformance with the provisions in Section 12-3.11B(3) Portable Signs, of the State Specifications, or Reflexite vinyl microprism reflective sheeting signs, or 3M high intensity reflectorized sheeting on aluminum substrate signs or Seibulite Brand Ultralite Grade Series encapsulated lens retroreflective sheeting signs, or equal.

27.01.03. Placement

A. No stockpiling of materials or parking of equipment will be allowed on streets and sidewalks that are open or accessible to the public.

B. Large equipment or construction trucks shall access the site in compliance with the City of Milpitas truck route ordinances.

C. All construction signs shall be placed in the field and shall be visible to drivers and not covered or blocked by trees or other fixed objects.

D. Contractor shall verify any sprinkler system conflicts before installing construction area signs in planting strip. Contractor shall replace landscaping upon removal of construction area signs.

E. Access to adjacent properties shall be maintained per Article 16.06. Access to Properties Owned by Others, of these Specifications.

F. Pedestrian access shall be maintained at all times in accordance with Article 17.01. Safety, of these Specifications.

G. The Contractor shall comply with the restrictions and approvals set forth by the City of Milpitas on the approved traffic control plan(s) and encroachment permit. The District shall impose liquidated damages to the Contractor for each day the Contractor fails to properly and adequately comply with the City's requirements. The Contractor is directed to Article 12.05. Liquidated Damages, of these Specifications.

H. Sidewalk work done on both sides of the street cannot be done simultaneously. One side shall remain open to pedestrians.

I. During sidewalk construction, alternative pedestrian access or 1 week advance notice of sidewalk closure shall be provided.

27.01.04. Testing

A. The Contractor shall accompany the Engineer to inspect the area, which will be affected by project construction, during the hours of darkness, to determine the adequacy of the traffic control plans before approving commencement of any construction work. The Contractor shall correct or add any traffic control devices deemed required by the Engineer.

27.01.05. Submittals

A. The Contractor shall submit to the Engineer the Contractor's Traffic Control Plan(s), approved by the City of Milpitas for right-of-way, at least ten (10) days prior to any work within the public right-of-way, which will affect traffic. No work impacting vehicular traffic and pedestrian access will be allowed prior to the approval of the Contractor's Traffic Control Plan(s) by the City of Milpitas.

27.01.06. Measurement

A. Traffic control shall not be measured.

27.01.07. Payment

A. Full compensation for furnishing all labor, materials, tools, equipment and incidentals necessary to provide Traffic Control as shown on the Drawings, as specified in these Specifications, and as directed by the Engineer, including:

1. Preparation of, and approval by the City of Milpitas of the Contractor's traffic control plan(s) showing the maintenance of traffic and pedestrian access, work zones for any demolition, trenching and excavation, formwork for headwalls at bridge locations, new concrete and asphalt concrete surface, and access into and out of the project site, within the project limits throughout all stages of construction, per this Article, per General Provisions Article 10.10. Traffic Control, and per Special Provisions Article 18.06. Traffic Control, of these Specifications.

2. In addition to required traffic control items provided for the Contractor's traffic control plan, Contractor shall supply up to the number of required warning signs to adjust for unexpected field conditions or adjustments requested by the City of Milpitas or the District.

3. Contractor to provide flaggers during all lane closures and at all driveways when construction traffic is exiting and entering public roadways.

4. Provide temporary pavement and trench plating as needed to maintain construction vehicle access.

5. All of the above described work and all other miscellaneous work necessary throughout the construction stages for the project to complete the traffic control as required to complete all items of work, shall be included in the lump sum or unit price bid for the items of work which require Traffic Control, and no separate payment will be made therefore.

THIS PAGE INTENTIONALLY LEFT BLANK

SECTION 28. MISCELLANEOUS ITEMS

28.01. Chain Link Fence and Gates—Bid Item No. 19

28.01.01. Scope of Work

A. Chain link fence and gates shall consist of all labor and materials necessary to install double swing, Type CL-6 and single swing, Type CL-6 chain link black vinyl gates, Type CL-6 chain link black vinyl fence, and Type CL-3.5 chain link black vinyl fence, as shown on the Drawings, as specified herein, and as directed by the Engineer.

28.01.02. Materials

A. Each gate section shall be able to swing freely both ways with a lock mechanism. Each gate shall be installed with adequate attachments, fittings, and fasteners as specified in Section 80 Fences, of the State Specifications. The locking mechanism shall consist of 3/8-inch steel bars shop fabricated and black vinyl coating as shown on the Drawings. The 3/8-inch steel bars shall be of low carbon alloy steel in accordance with ASTM A-36. The black vinyl fence and gate configuration shall be the chain link-type, as shown on the Drawings.

B. All fence materials, including and not limited to posts, caps, tapwire, and braces will conform to Section 80 of the State Specifications, except as modified herein.

C. All chain link fence will conform to Section 80-3 Chain Link Fences, of the State Specifications and State Standard Plan Detail A85, except as modified herein.

D. All chain link fence and gate fabric and posts shall be black vinyl coated conforming to the requirements in AASHTO Designation: M 181, Type IV, Class A.

E. The strength of the bond between the coating material and steel of the bonded vinyl coated chain link fabric shall be equal to or greater than the cohesive strength of the polyvinyl chloride (PVC) coating material. Bonded vinyl coating shall be black in color.

F. Cable used in the frame must be wire rope, 5/16 inch in diameter, have a minimum breaking strength of 5,000 lb., and be galvanized under Federal Specification RR-W-410.

G. Crimped sleeve clamps and stud socket assemblies must be metal, develop the strength of the cable, and be the color of the cable.

H. Posts and horizontal members must be standard steel pipe, structural steel tubing, or structural shapes. Structural tubing steel must comply with ASTM A 500 or A 501. Structural shapes, plates, bars, and bolts must comply with Section 55-1.02, Materials, of the State Standard Specifications.

I. Stretcher bars, truss rods, post tops, and other required fittings and hardware must be steel. Post tops and other closures must be watertight. Fittings and hardware must fasten properly to the posts and other members.

J. All posts, horizontal railings, base plates, bolts, nuts, and chain link fabric must be hot-dip galvanized.

K. Tension wires shall be at least 7-gage coil spring steel. Post clips shall be at least 9-gage steel. Wire ties or hog rings shall be 9-gage, commercial quality, steel wire. Tension wires, wire ties, and hog rings shall be galvanized under ASTM A 116, Coating Type Z, Class 3. 6-gage (0.192-inch minimum diameter) aluminum wire ties complying with ASTM B 211 or B 211M, Alloy 1100-H18, or 6-gage (0.192-inch minimum diameter) aluminum hog rings complying with ASTM B 211 or B 211M, Alloy 6061-T94 or Alloy 5052-H38 may be substituted for steel wire ties or hog rings.

28.01.03. Placement

A. The Type CL-6 black vinyl fence posts set in ground shall be embedded in concrete poured into the hole without backfill. Concrete shall be Class “A” per Section 9.01 of the City of Milpitas Standard Specifications for Roadway and Storm Water Improvements.

B. Type CL-3.5 andCL-6 black vinyl fence lock hook set on wall of floodwalls or other structures shall be flattened on end and shall be embedded in the post pocket with non-shrink grout per Article 29.07. Non-Shrink Nonmetallic Grout and Cement Mortar, of these Specifications. Sleeves will not be required. The Contractor’s attention is directed to Article 4.10. Preservation of Property, of these Specifications.

C. Chain link fabric must be woven into approximately 1-inch mesh. Stretch and fasten the fabric securely to the posts, other members, and tension wires. Stretch tension wires tightly.

D. Wire ties shall be given at least 1 complete turn. Ends of wire ties shall be bent away from pedestrian traffic.

E. Fence posts set in ground shall be embedded in concrete poured into the hole without backfill. Concrete shall be Class “A” per Section 9.01 of the City of Milpitas Standard Specifications for Roadway and Storm Water Improvements

28.01.04. Testing

A. No special requirements for the swing gates or new fencing.

28.01.05. Submittals

A. Contractor shall submit shop drawings for chain link fences and gates shall be submitted by the Contractor to the Engineer at least 15 Days prior to any fence

and gate installation. Chain link fence and gate plans will be approved by the Engineer prior to commencement of any work related to the chain link railing.

28.01.06. Measurement

A. The Type CL-3.5 and CL-6 black vinyl fencing shall not be measured.
B. The Type CL-6 black vinyl gates shall not be measured.

28.01.07. Payment

A. Full compensation for furnishing all labor, materials, tools, equipment and incidentals, and for doing all work required for the Type CL-3.5 and CL-6 black vinyl fence, Type CL-6 black vinyl single swing gates, and 15-foot and 16-foot wide Type CL-6 black vinyl double swing gates, complete in place, as shown on the Drawings, as specified in these Specifications, and as directed by the Engineer shall be included in the lump sum price bid for CHAIN LINK FENCE AND GATES, Bid Item No. 19, if authorized by the District.

28.02. Passive Flood Gate – Bid Item No. 20

28.02.01. Scope of Work

A. The passive flood gate shall consist of all work, labor, materials, and equipment necessary for the installation of an approximate 17-feet wide, 5-feet tall passive flood gate as shown in the Drawings. Passive shall mean that the gate functions without human intervention, power or mechanical assists to make the gate deploy and drain. Work shall include, but not be limited to, furnish and install the flood gate footing, and furnish and install the flood gate and its components. This work shall also include the manufacturer's engineering report fee, the manufacturer's on-site advisory fee, shipping and handling, shipping insurance and unloading of the flood gate at the project site.

28.02.02. Design

A. The passive flood gate shall be designed by the manufacturer to exclude the use of any electric or mechanical powered support equipment, springs, or pumps, for any operation of the gate to its open or closed position in passive mode, manufactured by Flood Break Automatic Floodgates or approved equal.

Flood Break Automatic Floodgates
5909 West Loop South
Bellaire, TX 77401
Phone: 1 (713) 980-6610
Fax: 1 (713) 629-9936
Email: info@floodbreak.com
Web: http://www.floodbreak.com

B. The components of the passive flood gate shall be per the manufacturer's instructions.

C. The flood gate shall be designed to resist static flood loads to a height of 5 feet, a dynamic water load of 5 feet per second, and floating debris object of 500 pounds.

D. The passive flood gate shall be traffic rated to sustain traffic loads corresponding to AASHTO HS-25 (40 ton) trucks while in the “closed” position.

E. The passive flood gate shall include the ability to power the gate into operating position using a powered lift system. The active power system shall be fully decoupled so that at no time will it interfere or be required for the fully passive operation of the gate, regardless of power availability.

28.02.03. Materials

A. Flood gate system shall be designed only use aluminum and stainless-steel components to resist corrosion and EPDM rubber gaskets for durability.

B. Concrete for the passive flood gate footing shall be in accordance with Article 29.01. Structural Concrete, of these Specifications.

C. Permeable material to be placed under footing shall conform to the provisions of Article 24.07. Permeable Material, of these Specifications.

D. Structural backfill shall be conforming to Section 24.05, Structural Backfill, of this Specification.

E. Geotextile fabric shall be in accordance with Article 24.08. Geotextile Fabric, of these Specifications.

F. Drain pipe shall be in accordance with Article 26.02. HDPE Pipe, of these Specifications.

28.02.03. Placement

A. Pre-Installation Meeting

1. Passive flood gate pre-installation meeting shall be held no later than 60 days before beginning any passive flood gate installation work to discuss the installation plan, requirements, procedures, and other elements of passive flood gate installation.

2. Those attending shall include representatives from the Contractor, Engineer, and passive flood gate manufacturer.

3. No passive flood gate installation activity shall be performed until the pre-installation meeting has been held, the Contractor’s installation plan has been approved by the Engineer, and all review comments have been resolved.

B. The Contractor shall verify and adjust the required dimensions before ordering the passive flood gate.

C. Store products in Manufacturer's unopened packaging until ready for installation.

D. Manufacturer representative must be on-site during gate installation to provide advisory services.

E. The Contractor shall install the passive flood gate per the Manufacturer's instructions.

F. Do not proceed with installation of flood gate until site preparation work is completed and verified by Engineer.

G. Excavation for placement of armoring aggregate shall conform to Section 19-2 Roadway Excavation, of the State Specifications.

H. Geotextile fabric placement shall be in accordance with Article 24.08. Geotextile Fabric, of these Specifications.

I. Placement of permeable Backfill Material shall conform to Article 24.07. Permeable Material of these Specifications.

J. Concrete placement for footing shall be in accordance with Article 29.01. Structural Concrete, of these Specifications.

K. All welding shall be performed by a certified welder in accordance with AWS standards and guidelines.

L. High Density Polyethylene Pipe (HDPE) placement shall conform to Article 26.02. HDPE Pipe, of these Specifications.

28.02.04. Testing and Commissioning

A. Inspection and shop tests of the flood gate shall be conducted by the Manufacturer in the shop before shipment of the gate.

B. The Manufacturer's representative must be on-site during flood gate field testing to provide advisory services.

C. Testing shall be in accordance with the flood gate manufacturer's recommendations and requirements. It shall include, but not limited to the following tests.

1. Field full height deployment test:

a. With temporary containment, a pool shall be created in the field to test the full deployment and drain of the flood gate. Design, specification, and safety testing of the containment is the responsibility of the Contractor.

b. As water filled up gradually in the pool, the gate shall rise automatically to its vertical position and stay for 15 minutes with an appropriate measurable leakage rate that is 0.5 gallon per minute per linear foot of wetted seal. As the drain is opened and water descends in the pool, the gate shall lower automatically. Upon complete draining of the pan, the gate panel shall rest flat in the pan and that no raised edges are observed.

c. If excessive leakage is observed during any part of the test, stop the test and follow Manufacturer representative's advice to correct the problem.

d. Engineer shall provide Contractor with the list of required parties to verify the operation of flood gate.

28.02.05. Submittals

A. Manufacturer's product data sheets including components, preparation instructions and recommendations, storage and handling requirements and recommendations, and installation methods.

B. Shop drawings including plan, section, elevation, and perspective drawings as necessary to depict proper placement, installation, and operation methods for each gate to be installed.

C. Manufacturer's shop inspection and shop test reports.

D. Field full height deployment test procedure and test report.

E. Two hard copies and one electronic copy (pdf file type) of the Manufacturer's operation and maintenance manual.

F. Two hard copies and one electronic copy (pdf file type) of the Flood gate ID and flood gate Manufacturer's warranty.

28.02.06. Measurement

A. Quantities for the passive flood gate shall not be measured.

28.02.07. Payment

A. Full compensation for furnishing all labor, materials, tools, equipment and incidentals, and for doing all work required to coordinate with the manufacturer, shipping and transportation, manufacturer's on-site inspection and testing for the passive flood gate, complete in place, as shown on the Drawings, as specified in these Specifications, and as directed by the Engineer shall be included in the lump sum price bid for PASSIVE FLOOD GATE, Bid Item No. 20, if authorized by the District.

SECTION 29. CONCRETE

29.01. Structural Concrete

29.01.01. Scope of Work

A. Structural concrete shall consist of all work and materials necessary to construct all reinforced concrete structures as shown on the Drawings, as specified by these Specifications, and as directed by the Engineer, which includes furnishing and placing concrete forms (including stripping the forms), reinforcing steel and concrete.

29.01.02. Materials

A. Structural concrete shall be Portland Cement concrete conforming to the provisions of Section 51, “Concrete Structures”; Section 52, “Reinforcement”; and Section 90, “Concrete,” of the State Specifications and these Specifications.

B. Structural concrete shall be Class I concrete. The 28-day compressive strength of the structural concrete shall be greater than or equal to 4,000 psi for all structures other than the u-frame channel. As shown on the Drawings, the 28-day compressive strength of the structural concrete for the u-frame channel shall be greater than or equal to 4,500 psi. Concrete with lesser strength will be rejected. Rejected concrete work shall be completely removed and disposed of off the right of way at the Contractor’s expense. The structure shall then be reconstructed in accordance with the Drawings and these Specifications.

C. Cement is to be Type II, low alkali (no higher than 0.4 percent), conforming to ASTM C-150. Up to a maximum of 18 percent of cement may be substituted with Fly Ash (Type “F”). Structural concrete mix designs shall not contain less than 590 lbs. of cement per cubic yard.

D. All floodwalls, headwalls, and the walls of the U-Frame channel shall be colored with Barcelona Brown (C-359) from Sika Corporation - Chromix P Admixtures, or approved equal. Contractor shall follow manufacturer’s instructions for the cement mix.

E. All aggregate used in concrete shall conform to ASTM C-33. Aggregate shall be uniformly graded, with the maximum aggregate size required to be ¾ inch to 1 inch.

F. Structural concrete shall be the cast-in-place method, not shotcrete method except where expressly stated per Article 29.08 Shotcrete (Air Blown Mortar) of these Specifications.

G. An air-entering agent may be used in accordance with the provisions of Section 90-1.01C(4) Admixtures, of the State Specifications. The nominal limit of total air content shall be 4 percent.

H. No admixtures, other than air entraining agent or Fly Ash, shall be used unless authorized in writing by the Engineer.

I. Hooks, bends, laps, and all steel fabrication shall conform with the applicable portions of the ACI 318 Building Code Requirements for Reinforced Concrete.

J. The amount of water used in the concrete shall not exceed the amount necessary to produce a maximum slump of 4 inches for concrete sections thicker than 12 inches, and 5 inches for sections 12 inches thick or less. The amount of slump shall be consistently maintained within the limits of plus or minus ½ inch for each test. The maximum water-cement ratio for Class I concrete shall be 0.46 by weight.

K. Drill and bond dowels shall conform to Section 51-1.03E(3) Drill and Bond Dowels, of the State Specifications and these Specifications.

L. Drill and bond dowels (chemical adhesive) shall conform to Section 51-1.03E(5) Drill and Bond Dowels (Chemical Adhesive), of the State Specifications and these Specifications.

M. Reinforcement shall be in accordance with the requirements of Section 52 Reinforcement, of the State Specifications and these Specifications. Galvanize reinforcing as indicated on the drawings per requirements of ASTM A767 Standard Specification for the Zinc-Coated (Galvanized) Steel Bars for Concrete Reinforcement.

N. Mechanical couplers for reinforcement are permitted and shall be the sleeve threaded type conforming to the requirements of Section 52-6.03C(2) Mechanical Splices, of the State Specifications and these Specifications. Galvanize couplers as indicated on the drawings per requirements of ASTM A767 Standard Specification for the Zinc-Coated (Galvanized) Steel Bars for Concrete Reinforcement.

O. Concrete forms shall be plywood, Exterior Grade, Douglas Fir, Class I, not less than ¾ inch thick. Smooth metal forms may be used in lieu of plywood.

29.01.03. Placement

A. Cast-in-place method for concrete installation shall be used in every instance in this project except where expressly called out per Article 29.08 Shotcrete (Air Blown Mortar) of these Specifications. Other than in those locations called out in Article 29.08 of these Specifications, only the cast-in-place method for concrete is approved for this project.

B. Placement of concrete shall conform to the provisions of Section 51-1.03D Placing Concrete, of the State Specifications.

C. Curing of concrete shall conform to the provisions of Section 51-1.03H Curing Concrete Structures and Section 90-1.03B Curing Concrete, of the State

Specifications. The curing compound shall be non-pigmented with fugitive dye except when specified otherwise in these Specifications. The curing compound shall not be petroleum hydrocarbon resin base or chlorinated rubber base.

D. The Contractor shall have the option to place concrete by pumping. Pumping concrete through aluminum or magnesium pipes will not be permitted.

E. Transverse reinforcement shall be placed at right angles to channel control line unless otherwise shown on the Drawings.

F. Before placing fresh concrete, the entire surface of each construction joint shall be thoroughly cleaned of surface laitance, curing compound or other material foreign to the concrete and clean coarse aggregate shall be exposed. Surfaces of fresh concrete in place no more than 8 hours may be cleaned with air and water jets, but concrete surfaces in place for more than 8 hours shall be cleaned by abrasive blast methods.

G. The concrete in each integral part of the structure shall be placed continuously and the Contractor will not be permitted to commence work on any part unless facilities are on hand and the forces are sufficient to complete the part without interruption in the placing and finishing of the concrete.

H. Cold joints or joints in the concrete due to stopping work shall be avoided as far as possible but in the event of breakdown of Contractor's operation; the Contractor shall complete the consolidation of the concrete to a reasonable uniform stable slope while the concrete is still plastic. Before concrete placing is resumed, the surfaces of cold joints shall be cleaned as described above and brushed with fresh mortar before concrete placing begins. Cold joint areas in concrete shall be tested by striking the surfaces with a hammer to detect possible voids or honeycomb areas. The Contractor shall remove all honeycomb, rock pockets, or unsound concrete and shall repair such areas in accordance with these Specifications.

I. A surface finish in accordance with Section 51-1.03F(3) Class 1 Surface Finish, of the State Specifications shall be provided on all exposed surfaces of formed concrete structures not specified to have special architectural treatment. Another exception is the north bank wall of the U-Frame structure adjacent to the Milpitas Materials Company (LT bank Floodwall No. 1), which shall have an MDO Class B finish.

J. All formed surfaces which are to have special architectural treatment (i.e., form liner) shall be provided with a “Class 2 Surface Finish” as specified in Section 51-1.03F(4) Class 2 Surface Finish, of the State Specifications.

K. All formed surfaces which are to be buried shall be provided with an “ordinary” surface finish as specified in Section 51-1.03F(2) Ordinary Surface Finish, of the State Specifications.

L. Channel bottoms shall be provided with a broom finish.

M. Concrete forms installation and removal are to comply with provisions of ACI 117, 318, and 347.

N. If reinforcement is encountered during drilling before the specified depth is attained, the Engineer shall be notified. Unless the Engineer approves coring through the reinforcement, the hole will be rejected and a new hole, in which reinforcement is not encountered, shall be drilled adjacent to the rejected hole to the depth shown on the plans.

O. The Contractor's attention is directed to the Final Lake and Streambed Alteration Agreement (CDFW) in Appendix C, Measure 2.16: "Poured concrete, including grout associated with rock riprap, shall be excluded from the wetted channel or reservoir for a minimum period of 30 days after it is installed. During that time the concrete shall be kept moist, and runoff from the concrete shall not be allowed to enter a waterway. Commercial sealants may be applied to the poured concrete surface where difficulty in excluding water flow for a long period may occur. If sealant is used, water shall be excluded from the site until the sealant is dry."

29.01.04. Testing

A. The testing for compressive strength of concrete shall conform to the provisions of Section 90-1.01D(5) Compressive Strength, of the State Specifications. Concrete slump tests shall be completed in accordance with ASTM Test Method C-143, performed by Contractor, as directed by the Engineer.

29.01.05. Submittals

A. Mix designs for concrete shall be prepared by the Contractor and submitted for each type of concrete pour locations in PDF format. Each submittal shall list the mix design number and what locations that particular mix will be poured. The mix shall be reviewed by the District prior to ordering materials or mixing concrete.

B. The Contractor shall submit shop drawings of reinforcing steel on this project indicating all layouts, dimensions and details including location of fence/railing post pockets, etc. in PDF format. No fabrication of reinforcing steel will be allowed until shop drawings have been reviewed per Section 7, Shop Drawings, Product Data, and Samples of these Specifications. Contractor also shall submit shop drawings for miscellaneous items like bonding materials, repair grouts, non- shrink nonmetallic grouts, etc., that are shown on plans, as well as manufacturer's data, installation procedures, guaranties/warranties, etc. for District's review. Shop drawings used in the field shall be reviewed and approved copies.

29.01.06. Measurements

A. Measurement of structural concrete shall be specified in the item of work, which requires structural concrete.

B. Measurements of reinforcing bars, dowels, galvanizing, epoxy coating, drilling and bonding, materials, miscellaneous items shall not be made.

29.01.07. Payment

A. Full compensation for furnishing all labor, materials, tools, equipment and incidentals, and for doing all work to supply Structural Concrete per this Article to construct reinforced concrete structures, including structure excavation and backfill, all reinforcing bars, dowels, drill and bond dowels, joints, waterstops, as shown on the Drawings, as required to complete the project, as specified by these Specifications, and as directed by the Engineer shall be considered as included in the prices bid for the items of work which requires structural concrete, and no separate payment will be made therefor.

29.02. Controlled Density Fill

29.02.01. Scope of Work

A. Controlled density fill shall consist of all work and materials necessary to furnish and place, as shown on the Drawings, as specified in these Specifications and as directed by the Engineer.

29.02.02. Materials

A. Controlled density fill material shall conform to Section 19-3.02G Controlled Low-Strength Material, of the State Specifications.

29.02.03. Placement

A. Finish grade for controlled density fill shall be as shown on the Drawings or as required to conform to adjacent ground elevation.

29.02.04. Testing

A. Controlled density fill shall be tested in accordance with Section 19-3.02G Controlled Low-Strength Material, of the State Specifications.

29.02.05. Submittals

A. Submit a mix design and test data.

29.02.06. Measurement

A. The quantity of controlled density fill will not be measured.

29.02.07. Payment

A. Full compensation for furnishing all labor, materials, tools, equipment and incidentals and for doing all work required for placing controlled density fill as shown on the Drawings, as specified in these Specifications, and as directed by

the Engineer shall be considered as included in the lump sum or unit price bid for the items of work which requires controlled density fill, and no separate payment will be made therefor.

29.03. Not Used

29.04. Joints, Waterstops and Sealants

29.04.01. Scope of Work

A. Expansion Joints, Waterstops and Sealing Joints shall consist of work and materials necessary to furnish and place these items in concrete as shown on the drawings and as specified in these Specifications.

29.04.02. Materials/Placement

A. Joint Waterproofing material and construction shall be per details indicated on plans, as approved by the District from contractor submitted material(s), procedures and warranties and shall conform to the provisions in Section 51-2 Joints, of the State Specifications.

B. Furnishing and installation of waterstops shall conform to the requirements as stated in paragraph above and in Section 51-2.04 Waterstops, of the State Specifications and waterstop manufacturer's requirements. Contractor shall follow the manufacturer's installation guidelines and splicing guidelines. For water shop splicing, Contractor shall provide factory made waterstop fabrications for all changes of direction, intersections, and transitions, leaving only butt joint splicing for the field. For epoxied waterstops, Contractor shall only use epoxy recommended by the waterstop manufacturer. Contractor shall store PVC waterstops in storage containers or under tarps to protect from oil, dirt, and sunlight/ultraviolet exposure.

C. Furnishing and installation of neoprene strip shall conform to the requirements for strip waterstops as provided in Section 51-2.05 Strip Waterstops, of the State Specifications.

D. Expansion joints and weakened plane joints shall be provided at intermediate locations as called out and detailed on the Drawings.

E. All joints shall be sealed in conformance with the details shown on the drawings and the provisions in Section 51 Concrete Structures, of the State Specifications.

29.04.03. Testing

A. No special requirements.

29.04.04. Submittals

A. Three pieces of 12" long samples of each type of waterstop being used and three pieces of each accessory used in the construction shall be submitted along with

manufacturer's literatures, installation procedures and warranties shall be submitted for District's review and written response.

B. Certificate of compliance for waterstop material. The certificate of compliance must include a statement that the material complies with Item 6 of Army Corps of Engineers CRD-C-572.

29.04.05. Measurement

A. Expansion joints will not be measured.

29.04.06. Payment

A. Full compensation for furnishing all labor, materials, tools, equipment and incidentals and for doing all work required for joints, waterstops and sealants per this Article as shown on the Drawings, as specified in these Specifications, and as directed by the Engineer shall be considered as included in the lump sum or unit prices bid for the items of work which requires joints, waterstops and sealants, and no separate payment will be made therefor.

29.05. Formwork and Falsework

29.05.01. Scope of Work

A. Forms and Falsework shall consist of the structural design, work and materials necessary to support the placement of the concrete and furnish and place joints in the concrete as shown on the Drawings and as specified in these Specifications.

29.05.02. Materials/Placement

A. Forms shall conform to the provisions in Section 51-1.03C(2), "Forms," of the State Specifications.

B. Falsework shall conform to the provisions in Section 48-2 Falsework, of the State Specifications.

29.05.03. Testing

A. No special requirement.

29.05.04. Submittals

A. The Contractor shall submit details and layout of the joints and the design and working Drawings of Falsework for District's review.

29.05.05. Measurements

A. Form and Falsework will not be measured.

29.05.06. Payment

A. Full compensation for furnishing all labor, materials, tools, equipment and incidentals and for doing all work required for forms and falsework per this Article as shown on the Drawings, as specified in these Specifications, and as directed by the Engineer shall be considered as included in the lump sum or unit price bid for the items of work which requires forms and falsework, and no separate payment will be made therefor.

29.06. Anti-Graffiti Treatment (Not Used)

29.07. Non-Shrink Non-Metallic Grout and Cement Mortar

29.07.01. Scope of Work

A. Non-shrink non-metallic grout shall be used as required on the Drawings and as specified in these Specifications.

29.07.02. Materials

A. Non-shrink non-metallic grout shall be one of the following or an approved equal:

1. Masterflow 928; BASF.
2. Sonogrout 10K; Degussa Building Systems.
3. Sure-Grip High Performance Grout; Dayton Superior Corporation.

B. Mortar shall conform to the requirements of ASTM C270. Cement mortar grout for field repair shall consist of one part of Portland cement and two parts of clean sand by volume, with sufficient water to obtain workable consistency. The consistency of mortar shall be adjusted to the satisfaction of the mason, and water shall be added as necessary or convenient in using the mortar. This shall be done by forming a basin in the mortar, adding water and mixing it into the mortar mix, not by splashing water over the surface.

29.07.03. Placement

A. Installation and mixing of the grout and cement mortar shall be in conformance with the manufacturer's specifications.

29.07.04. Testing

A. No special requirements.

29.07.05. Submittals

A. Submit manufacturer's product specifications for review.

29.07.06. Measurements

A. Non-shrink grout and cement mortar shall not be measured.

29.07.07. Payment

A. Full compensation for furnishing all labor, materials, tools, equipment and incidentals, and for doing all work required for non-shrink grout or cement mortar as shown on the Drawings, as specified in these Specifications, and as directed by the Engineer shall be considered as included in lump sum or unit price bid for the items of work requiring the use of Non-shrink grout or mortar, and no separate payment will be made therefor.

29.08. Shotcrete (Air Blown Mortar)

29.08.01. Scope of Work

A. Shotcrete or air blown mortar consists of all work, materials, and equipment necessary to furnish and place shotcrete for the concrete structures as shown in the Drawings, as specified in these Specifications, and as directed by the Engineer. The use of shotcrete is only permitted as required along the U-frame channel near the Milpitas Materials Company property where the existing wall is to be left in place between FW20-Line Sta 10+00 and 14+13 (E-Line Sta 13+19± and 17+36±).

29.08.02. Definitions

A. Wet-mix process**:** Delivering mixed aggregate, cementitious material including fiber reinforcing, and water pneumatically to the nozzle and adding any admixture at the nozzle.

B. Rebound: Shotcrete material that has ricocheted off the receiving surface, which is recovered and is clean and free of foreign material. Rebounds shall not be allowed for reuse in the concrete mix to be used for shotcrete or any other construction.

29.08.03. Materials

A. Shotcrete must consist of cementitious material, fine aggregate, and water. Cementitious material, fine aggregate, and water must comply with Section 90-1 of the State Standard Specifications and these Specifications.

B. Shotcrete shall have a minimum compressive strength of 4,500 psi at 28 days.

C. For the wet-mix process:

1. Shotcrete must contain not less than 630 pounds of cementitious material per cubic yard.

2. Contractor may substitute a maximum of 30 percent coarse aggregate for the fine aggregate. The maximum size of coarse aggregate must be such that 100 percent passes the 1/2-inch screen and at least 90 percent passes the 3/8-inch screen. Smooth gravel shall not be permitted.

3. Admixtures may be added. They must comply with section 90-1.02E of the State Standard Specifications and these specifications.

4. The concrete shall include 3 (three) lb. synthetic fiber reinforcing, Fibermesh 650 as manufactured by Propex Concrete Systems or approved equal, per cubic yard of the shotcrete. The synthetic (non-metallic) fiber shall have zero absorption, 0.91+/- 0.01 specific gravity with graded, low electrical conductivity, with high resistance to acid and salt and melting point of 324-degree F. The fiber reinforcing shall be thoroughly mixed a minimum of five minutes prior to application of the shotcrete.

5. Slump: Maximum slump shall not exceed 3”.

D. Forms:

1. Design, erect, support, brace, and maintain forms, according to ACI 301, to support shotcrete and construction loads and to facilitate shotcreting. Construct forms so shotcrete members and structures are secured to prevent excessive vibration or deflection during shotcreting.

2. Fabricate forms to be readily removable without impact, shock, or damage to shotcrete surfaces and adjacent materials.

3. Construct forms to required sizes, shapes, lines, and dimensions using ground wires and depth gages to obtain accurate alignment, location, and grades in finished structures. Construct forms to prevent leakage but permit escape of air and rebound during shotcreting. Provide for openings, offsets, blocking, screeds, anchorages, inserts, and other features required in the work.

4. Form openings, chases, recesses, bulkheads, keyways, and screeds in formwork. Determine sizes and locations from trades providing such items. Accurately place and securely support items built into forms.

E. Joints:

1. At expansion joints use ADEKA KM-3030M rubber waterstops.
2. At weakened plane joints use ADEKA MC-2010MN rubber waterstops.
3. Stop waterstops 5" from the top of wall.

29.08.04. Placement

A. Apply shotcrete by the wet-mix process only. Direct the nozzle in a manner to minimize rebound of the shotcrete. Maintain a uniform velocity of the material as it leaves the nozzle and at a rate determined for the job site conditions.

B. Shotcrete operations shall completely encase all reinforcement and other obstructions shown on the Drawings. Exceptional care shall be taken to properly encase the reinforcement and other obstructions with shotcrete.

C. Shotcrete construction lift height shall be 10 (ten) feet maximum and can be field adjusted by the Contractor for reasons included in the shop drawings. Foundations must be free of surface water. Use ground or gaging wires where necessary to establish thickness, surface planes, and finish lines.

D. Horizontal construction joints with cast in place concrete and previously hardened shotcrete surfaces shall be thoroughly cleaned and dressed to transfer the stresses, where required, secure the fillers and waterstops for full waterproofing, facilitate sequencing, etc. as indicated on plans. Horizontal construction joints shall not have chamfered edges and shall be finished flush and smooth.

E. Wall panels can be cast in alternate patterns with minimum 3-days delay. The following lifts also can be cast with 3-days delay between casting.

F. Splicing of reinforcing bars #7 or larger shall be by butt splicing only. Bundled rebar shown on the plans will be moved to single rebar at half the spacing.

G. For wet-mix shotcrete:

1. Transport shotcrete under section 90-1.02G(3) Transporting Mixed Concrete, of the State Standard Specifications and these specifications.

2. Place gaging wires at approximately 7-foot centers

3. Do not use materials that have been mixed for more than 90 minutes

4. Reuse of rebound materials is not permitted.

H. Place shotcrete to the depth shown and check surface with a straightedge. Bring to grade any low spots or depressions by placing additional shotcrete. The finished surface must be smooth and uniform. The surface finish shall conform to the provisions for Class 1 surface finish of Section 51-1.03F(3), “Class 1 Surface Finish” of the State Specifications.

I. All edges and joints shall be straight, uniform, clean and finished neatly, including waterstops, fillers, chamfers, etc. as shown on the project plans.

J. Remove and replace loose areas of shotcrete.

K. Shotcrete construction shall be wet cured at least seven days by using Absorptive Cover AASHTO M 182, Class 2, burlap cloth, Moisture-Retaining Cover, ASTM C 171, polyethylene film, or white burlap-polyethylene sheet using clear potable water.

L. Upon curing and 28 days after the construction; and prior to other applications of treatments, remove all the protruding fiber reinforcing at all exposed surfaces by quick applications of open flame subject to all safety measures; or approved equal method, and so as not to heat or damage the concrete or leaving any residual marks. Contractor shall submit the process to be utilized in order to remove all the protruding/exposed fiber reinforcing for the District's review prior to construction.

M. Remove unsound or loose materials and contaminants that may inhibit bond of shotcrete repairs. Chip or scarify areas to be repaired to extent necessary to provide sound substrate. Cut edges square and 1/2 inch deep at perimeter of work, tapering remaining shoulder at 1:1 slope into cavity to eliminate square shoulders. Dampen surfaces and apply new shotcrete.

N. Repair core holes from in-place testing according to repair provisions in ACI 301 and as described here in. The 10% of cored hole's inner surface shall be roughened within middle half of the depth, cleaned thoroughly and dry packed fully with non-shrink, non-metallic grout and cured per grout manufacturer's recommendations. The non-shrink grout to be used is specified elsewhere in the context of this project specifications. Surface finishes, texture, and color of the repairs shall match surrounding areas of the concrete.

29.08.05. Testing

A. Prior to performing shotcrete work, the Contractor shall construct at least two (2) preconstruction test panels for each mixture being considered unless otherwise specified.

B. The nozzle operator shall have a minimum of 3,000 hours experience as an operator on projects with a similar application.

C. Preconstruction test panels shall be constructed by the nozzle operator and application crew scheduled to do the work, using equipment, materials, mixing proportions, ambient temperatures and procedures proposed for the work.

D. The preconstruction test panels shall conform to the following:

1. One test panel, of the size determined by the Contractor, shall be unreinforced and shall have 3 cores taken from it and tested for compressive strength.

2. The compressive strength shall be the average strength of the 3 cores, except that, if any core should show evidence of improper coring, the core shall be discarded and the compressive strength shall be the average strength of the remaining cores. The test panel shall be identified and submitted to the Engineer with the test results including a description of the mixture, proportions, and ambient temperature.

3. One test panel shall have the same (1) thickness, (2) bar size and amount of bar reinforcement or other obstructions and (3) positioning of bar reinforcement or obstructions as the most heavily reinforced section of shotcrete to be placed. The test panel shall be square with the length of the sides equal to at least 3 times the thickness of the most heavily reinforced section of shotcrete to be placed, but not less than 30 inches. After a minimum 7 days of cure, the test panel shall be broken by the Contractor, in the presence of the Engineer, into pieces no larger than 10 inches in the greatest dimension. The surfaces of the broken pieces shall be dense and free of laminations and sand pockets, and shall verify that the bar reinforcement or other obstructions are completely encased.

4. Both test panels shall be cured under conditions similar to the actual work.

5. At the option of the Contractor, cores to be used for determining the compressive strength may be taken from the reinforced test panel described above in lieu of making a separate unreinforced test panel as described above. The compressive strength shall be the average strength of the 3 cores, except that, if any core should show evidence of improper coring or contains bar reinforcement or other obstructions, the core shall be discarded and the compressive strength shall be the average strength of the remaining cores. If cores are taken from the reinforced test panel, the panel shall not be broken into pieces, as described above, until it has cured for a minimum of 14 calendar days.

6. The Contractor shall be responsible for obtaining and testing all required preconstruction and production test cores. All coring and testing shall be at the Contractor's expense and performed in the presence of the Engineer, unless otherwise directed. The Engineer shall be notified a minimum of 24 hours prior to the Contractor performing any coring or testing operations.

7. All cores shall be obtained and tested for compressive strength in accordance with the specifications of ASTM Designation: C42. Cores used for determining compressive strength shall not contain any bar reinforcement or other obstructions. The testing shall be performed at an independent testing facility approved by the Engineer. A copy of the test results shall be furnished to the Engineer within five (5) days following completion of testing.

8. All test panels shall become the property of the Contractor and shall be disposed of as provided in Section 5-1.20B(4), "Contractor-Property Owner Agreement," of the State Specifications.

9. At least three (3) production test cores shall be taken from each 300 square feet or portion thereof of shotcrete placed each day. The cores shall be 3-inches in diameter. The location where cores are to be taken will be designated by the Engineer. Test cores shall be identified by the

Contractor and a description of the core location and mixture, including proportions, shall be submitted to the Engineer with the test cores, immediately after coring. Cored holes shall be filled with mortar in accordance with the requirements of Section 51-1.02F, “Mortar,” of the State Specifications.

10. Upon receipt of the cores, the Engineer will perform a visual examination to determine acceptance, as described below. Within 48 hours after receipt, the Engineer will return the cores to the Contractor for compressive strength testing.

11. The compressive strength test shall be performed using the production test cores described above. The compressive strength shall be the average strength of the 3 cores, except that, if any core should show evidence of improper coring, the core shall be discarded and the compressive strength shall be the average strength of the remaining cores

12. The basis of acceptance for production test cores shall be (1) that the core is dense and free of laminations and sand pockets, and shows that the reinforcement or other obstructions are completely encased and (2) the same as specified for test cylinders in the Section 90-1.01D(5), “Compressive Strength,” of the State Specifications.

13. If any production test core shows signs of defective shotcrete as described in (1) above, the shotcrete represented by such test core will be rejected, unless the Contractor, at the Contractor’s expense, obtains and submits evidence acceptable to the Engineer that the strength and quality of the shotcrete placed in the work are acceptable.

29.08.06. Submittals

A. Contractor shall submit shop drawings of the shotcrete work:

1. Layout of wall elevation indicating extent of cast-in-place slabs, Cast-In-Place portions of wall and shotcrete walls.

2. Indicate all planned joint locations and types on wall elevations.

3. Bar reinforcing layouts including all hooks & dowels.

4. Contractor’s approach for schedule of casting patterns, finishing, and curing.

B. At least 10 working days prior to constructing any test panels, the Contractor shall submit to the Engineer for approval, a Quality Control Plan (QCP) for the proposed method of placement. The plan shall include the following:

1. The number and qualifications of nozzle operators available to place shotcrete, the number of nozzle operators on-site at any time during the shotcrete placement, description of their work schedule, and the procedures for avoiding fatigue of any nozzle operator.

2. The proposed method of placing shotcrete, including, but not limited to, application rates, details of any proposed construction joints and their locations, and methods for achieving the required thickness and surface finish.

3. The procedure for curing shotcrete surfaces.

4. The description of a debris containment system, to be used during the cleaning of bar reinforcing steel and concrete and placing of shotcrete, as required to provide for public safety.

C. No construction of test panels shall be performed until the QCP is approved by the Engineer.

D. The Contractor shall submit preconstruction test panels as required in Article 29.08.05 Testing of these Specification.

29.08.07. Measurement

A. Measurement of shotcrete shall be per cubic yard of vertical wall. Measurement of reinforcing bars, dowels, galvanizing, epoxy coating, drilling and bonding, waterstops & joint materials, and miscellaneous items shall not be made.

29.08.08. Payment

A. Full compensation for furnishing all labor, materials, tools, equipment, and incidentals and for doing all work required for shotcrete per this Article, as shown on the Drawings, as specified in these Specifications, and as directed by the Engineer shall be included in the unit price bid per cubic yard for the item of work which requires shotcrete and no additional payment will be made therefore.

THIS PAGE INTENTIONALLY LEFT BLANK

SECTION 30. SPECIAL CONCRETE STRUCTURES

30.01. Flood Walls—Bid Item No. 21

A. The Contractor's attention is directed to Article 16.02. Utilities, Article 16.03. Protection of Existing Improvements, and Article 16.04. Monitoring Surveys, of these Specifications.

30.01.01. Scope of Work

A. Flood Walls shall consist of all work, materials, labor and supplementary work necessary to construct spread footing concrete walls and headwall modifications. Included in this item of work shall be structural excavation, structural backfill including base course and drainage materials adjacent to the structure and geotextile fabric, forming, bar reinforcing steel, concrete, joint constructions, curing and site clean-up, and all other miscellaneous items necessary for construction of concrete flood walls as shown on the Drawings, as specified in these Specifications, and as directed by the Engineer.

B. The geotechnical report by Cal Engineering & Geology noted that the historic high groundwater at the site is within the upper 10 feet and can vary throughout the year. The report also provides groundwater information from monitoring wells at several locations throughout the project site. This report is available for review at the District's construction Administration webpage.

C. The Contractor shall be prepared to handle high groundwater as part of the excavation and earthwork elements of the project. The Contractor is advised that the subgrade may be positioned below the groundwater level or in areas which have been subjected to standing water. Prior to starting structural excavation, the Contractor shall conduct pilot holes down to the elevation of the structural excavation for every 500 feet of flood wall to determine the groundwater conditions. If groundwater is encountered in any part of the foundation, the groundwater shall be controlled in accordance with Article 23.05. Control of Water.

D. Flood Walls shall conform to the provisions in Sections 19 Earthwork, 52 Reinforcement, and 90 Concrete, of the State Specifications.

E. Potential Rejection of Bid: Concrete walls shall consist of cast-in-place concrete only, other than where the use of shotcrete is expressly called out in Article 29.08 Shotcrete (Air Blown Mortar) of these specifications. No other substitution, such as "shotcrete" will be allowed, except where called out in Article 29.08 of these Specifications. Any substitution for cast-in-place concrete will be considered as non-responsive and the whole bid for this project will be rejected.

30.01.02. Materials

A. Concrete shall be in accordance with Article 29.01. Structural Concrete, of these Specifications.

B. Reinforcing bars shall conform to ASTM Designation: A 706.

C. Expansion joint filler shall conform to ASTM Designation: D 1751 or ASTM Designation: D 2000 2AA-805.

D. Non-shrink non-metallic grout shall be premixed compound consisting of non-metallic aggregates, cement, water reducing & plasticizing agents capable of developing minimum comprehensive strength of 3000 psi in 48 hours and 7000 psi in 28 days, like “Sika Grout 212 High Performance” grout or approved equal.

E. Bonding adhesive shall be exterior grade synthetic emulsion liquid to bond new concrete to old concrete, like product number 9902 as manufactured by “Quikcrete” or approved equal.

F. Repair Grout shall be non-shrink, non-metallic low exothermic epoxy system, like “Five Star DP Epoxy Grout” or approved equal.

G. Permeable Backfill Material shall conform to the provisions in Section 68-2.02F Permeable Material, of the State Specifications.

H. Structural backfill shall conform to Article 24.05. Structural Backfill, of these Specifications.

30.01.03. Placement

A. Concrete construction shall be true and plumb in the lateral direction and shall conform to Article 29.01. Structural Concrete, of these Specifications, and as shown on the Drawings. Wall alignment tolerances shall be 0.5 inch per every 10 feet along the length of the floodwall. Plumbness tolerances shall be 0.5 inch per every 10 feet of vertical height.

B. Structural excavation shall be in accordance with Article 24.04. Structural Excavation, of these Specifications.

C. Structural backfill shall be placed in accordance with Article 24.05. Structural Backfill, of these Specifications.

D. Spread footings shall be formed before placing concrete. Placement of grade beam directly on soil without formwork is not allowed.

E. Reinforcement shall be in accordance with the Article 29.01. Structural Concrete, of these Specifications, and as shown on the Drawings.

F. Splices in vertical reinforcement will not be allowed in the bottom 6-feet for floodwall types A, B, and C. Splices in vertical reinforcement will not be allowed within H/4 (where H is the height of the floodwall) above the top of the footing for floodwall type D.

G. Expansions and control joints shall be accordance with the Article 29.04. Joints, Waterstops, and Sealants, of these Specifications and as shown on the Drawings. Casting of footings and walls schedules shall be as shown on the Drawings.

H. Shoring, where required, shall be in accordance with Article 24.11. Shoring, of these Specifications.

I. Curing shall be in accordance with the Article 29.01. Structural Concrete, of these Specifications.

30.01.04. Testing

A. Testing for concrete components of Concrete Walls shall be in accordance with Article 29.01. Structural Concrete, of these Specifications.

30.01.05. Submittals

A. Submittal for concrete components of Concrete Walls shall be in accordance with Article 29.01. Structural Concrete, of these Specifications.

B. The Contractor shall submit 4 sets of elevation and plan layout drawings of the floodwalls/retaining walls to the Engineer, as provided in Section 5-1.23B(2) Shop Drawings, of the State Specifications. The drawings shall be to scale and shall show the proposed top and bottom elevation lines. The top and bottom elevation lines shown on the Drawings are minimums and they shall be fully contained in the proposed layout drawings. The drawings shall include, within the limits shown on the Drawings, the panel sizes, pile spacing, footing steps, and locations of expansion and construction joints and details, and reinforcing bars and details.

C. Contractor shall submit 4 sets of product manufacturer's specifications and installation procedures for repair grout, non-shrink non-metallic grout and Concrete Bonding Adhesive for Engineer's review prior to purchase.

D. All submittals including steel fabrication shall comply with 2014 ACI 318 and the 14th Edition of AISC Steel Construction Manual. Contractor shall reference code articles in the submittals.

30.01.06. Measurements

A. Floodwalls shall not be measured.

30.01.07. Payment

A. Full compensation for furnishing all labor, materials, tools, equipment, and incidentals, and for doing all the work required to construct concrete floodwalls including structural excavation, structural backfill, base course, drainage, geotextile fabric, forming, structural concrete, bar reinforcing steel, complete in

place, including all joint constructions, grouts and bonding materials, wall penetrations, weep holes, etc., as shown on the Drawings, as specified in these Specifications, as required and as directed by the Engineer, shall be included in the lump sum price bid for FLOOD WALLS—Bid Item No. 21, if authorized by the District.

30.02. Structural Drainage

30.02.01. Scope of Work

A. Structure Drainage shall consist of all work and materials necessary to furnish and place weep holes as shown on the Drawings, as specified in these Specifications and as directed by the Engineer.

30.02.02. Materials

A. Polyvinyl chloride (PVC) pipe and fittings for weep holes shall be nominal 4-inch diameter Schedule 40 conforming to ASTM Designation D-1785. All fittings shall have solvent welded joints. The welding solvent shall conform to that recommended by the manufacturer of pipe. Perforations shall be staggered 16 mm holes.

B. The solvent-cement to join PVC shall conform to the manufacturer's recommendations.

C. Permeable material shall conform to the provisions of Article 24.07. Permeable Material, of these Specifications.

D. Geotextile fabric shall conform to the provisions of Article 24.08. Geotextile Fabric, of these Specifications.

E. Geocomposite drains shall be in accordance with Section 68-7 Geocomposite Drain Systems, of the State Specifications.

30.02.03. Placement

A. Structural drainage shall be placed as shown on the Drawings.

B. Geocomposite drains shall be in accordance with Section 68-7 Geocomposite Drain Systems, of the State Specifications.

30.02.04. Testing

A. No special requirements.

30.02.05. Submittals

A. No special requirements.

30.02.06. Measurement

A. The quantities for Structural Drainage shall not be measured.

30.02.07. Payment

A. Full compensation for furnishing all labor, materials, tools, equipment, and incidentals, and for doing all work required for Structural Drainage, as shown on the Drawings, as specified in these Specifications and as directed by the Engineer shall be considered as included in the lump sum or unit price bid for the items of work which require structural drainage, and no additional payment will be made therefore.

30.03. Architectural Treatment – Bid Item No. 22

30.03.01. Scope of Work

A. Architectural treatment shall consist of all work and materials necessary to furnish, and place textured concrete as shown on the Drawings and as specified in these Specifications.

30.03.02. Materials

A. Form liners shall be manufactured from an elastomeric material or a semi-elastomeric polyurethane material by a manufacturer of commercially available concrete form liners. No substitution of other types of form liner material will be allowed. Form liners shall leave crisp, sharp definition of the architectural surface. Recurring textural configurations exhibited by repeating, recognizable shadow patterns shall be prevented by proper casting of form liner patterns. Textured concrete surfaces with such recurring textural configurations shall be reworked to remove such patterns as approved by the Engineer or the concrete shall be replaced.

B. Form liners shall have the following properties:

Description	ASTM Designation	Range
Elastomeric Material Shore A Hardness Tensile Strength (Mpa)	D 2240	20 to 65
Semi-elastomeric Polyurethane Shore D Hardness Tensile Strength (Mpa)	D 2240 D 2370	55 to 65 18 minimum

C. Cuts and tears in form liners shall be sealed and repaired in conformance with the manufacturer's recommendations. Form liners that are delaminated from the form shall not be used. Form liners with deformations to the manufactured surface caused by improper storage practices or any other reason shall not be used.

D. Adhesives shall be compatible with the form liner material and with the concrete. Adhesives shall be approved by the liner manufacturer. Adhesives shall not cause swelling of the liner material.

E. Products and application procedures from form release agents shall be approved by the form liner manufacturer. Release agents shall not cause swelling of the liner material or delamination from the forms. Release agents shall not stain the concrete or react with the liner material.

F. Form liner pattern shall be Fitzgerald Formliners - Random Rough Stacked Rock, or approved equal.

30.03.03. Placement

A. Form liners shall be used for textured concrete surfaces and shall be installed in conformance with the manufacturer's recommendations, unless other methods of forming textured concrete surfaces are approved by the Engineer.

B. Form liners shall extend the full length of texturing with transverse joints at 8-foot minimum spacing. Small pieces of form liners shall not be used. Grooves shall be aligned straight and true. Grooves shall match at joints between form liners. Joints in the direction of grooves in grooved patterns shall be located only in the depressed portion of the textured concrete. Adjoining liners shall be butted together without distortion, open cracks or offsets at the joints. Joints between liners shall be cleaned before use to remove any mortar in the joint.

C. The release agent shall coat the liner with a thin film. Following application of form release agent, the liner surfaces shall be cleaned of excess amounts of agent using compressed air. Buildup of form release agent caused by the reuse of a liner shall be removed at least every 5 uses.

D. Form liners shall release without leaving particles or pieces of liner material on the concrete and without pulling or breaking concrete from the texture surface. The concrete surfaces exposed by removing form shall be protected from damage.

E. The architectural treatment shall be abrasive blasted with fine abrasive to remove the sheen without exposing coarse aggregate.

F. Concrete surfaces with architectural treatment shall be cured only by the forms-in-place or water methods. Sealant and curing compounds shall may be used but must be approved by CDFW before use. Contractor shall allow at least 10 business days for approval by CDFW.

G. The Contractor shall add 3/4" of concrete thickness on the area of wall that receives architectural treatment.

30.03.04. Test Panel

A. A test panel at least 2-foot by 2-foot in size shall be successfully completed at a location approved by the Engineer before beginning work on architectural treatments. The test panel shall be constructed and finished with the materials, tools, equipment, and methods to be used in construction of the architectural treatment. If ordered by the Engineer, additional test panels shall be constructed and finished until the specified finish, texture, and color are obtained, as determined by the Engineer and at no additional costs.

B. The test panel approved by the Engineer shall be used as the standard of comparison in determining acceptability of architectural treatment for concrete surfaces.

30.03.05. Submittals

A. Submit test panel for review and approval for cast-in-place form liner finish.

30.03.06. Measurement

A. Quantities of architectural treatment shall not be measured.

30.03.07. Payment

A. Full compensation for furnishing all labor, materials, test panels, tools, equipment, and incidentals and for doing all work required to provide the architectural treatment, complete in place, as shown on the Drawings, as specified in the Specifications, and as directed by the Engineer shall be included in the lump sum price bid for ARCHITECTURAL TREATMENT, Bid Item No. 22, if authorized by the District.

THIS PAGE INTENTIONALLY LEFT BLANK

SECTION 31. WETLAND BROADCAST SEEDING AND PLANTING

31.01. Wetland Broadcast Seeding and Planting—Bid Item No. 23

31.01.01. Scope of Work

A. Broadcast seeding shall consist of furnishing all material, labor, and equipment necessary to perform the Work for broadcast seeding as shown on Drawings and as specified herein.

B. Planting shall consist of furnishing all material, labor, and equipment necessary to perform the Work for planting as shown on Drawings and as specified herein.

C. The Work of this Section includes broadcast seeding, plant layout, installing plug container plants, and maintaining plug container plants until commencement of the three (3)-year establishment maintenance period:

D. Plant Pathogen Infection Minimization

1. Contractor shall adhere to the *Guidelines to Minimize Phytophthora Contamination in Restoration Projects*, dated October 2016 (Working Group for Phytophthoras in Native Habitats 2016). This includes but is not limited to decontaminating their equipment, tools, and personnel boots to prevent the introduction of plant pathogens. All equipment shall be cleaned free of soil from any prior work site prior to arriving to the Project site. Equipment and tools moved off-site and returned later for use within the planting areas will again require decontamination by the Contractor. Decontamination of equipment, tools, etc. by the Contractor shall be included in the lump sum price bid for MOBILIZATION AND DEMOBILIZATION, Bid Item No. 7 and no separate payment will be made therefor.

E. Project Conditions

1. Planting areas may have saturated soils or standing water at the time of planting. Contractor shall provide and employ appropriate materials and techniques for planting in these site conditions. Contractor shall provide and employ plywood, mud boots, or other methods approved by Engineer to protect wetland surfaces from damage created by foot traffic or equipment use.

2. Contractor shall be responsible for worker safety when accessing planting areas per Section 8 Safety and Security Management, of these Specifications.

F. Qualifications

1. At the time of bid, Contractor shall provide a copy of California C-27 Contractor's License.

2. The Contractor shall have demonstrated experience with a minimum of three completed projects that included installation of wetland plants, and application of seeds.

31.01.02. Materials

A. General

1. Materials not conforming to these Specifications and requirements shall remain the property of the Contractor and shall be removed from Project site at no additional cost.

B. Wetland Broadcast Seed Mix

1. Plant list of species and pounds of pure live seed per acre for Wetland Broadcast Seed Mix is provided in following table:

Species Name	Common Name	Rate (Pounds of Pure Live Seed (PLS)/Acre)
Cyperus eragrostis	Tall flatsedge	3
Elymus triticoides	Beardless wildrye	12
Hordeum brachyantherum	Meadow barley	12

2. Percent purity and percent germination are given by the manufacturer and shall be submitted to the Engineer by the Contractor upon delivery.

3. Seed shall be from San Francisco Bay Area ecotypes. If a particular species is not available from San Francisco Bay Area ecotypes, either available seed stock from adjacent counties or alternate plant species may be substituted only upon approval from Engineer.

4. Seed may be available from Pacific Coast Seed, 533 Hawthorn Place, Livermore, CA, (925) 373-4417, or approved equal.

5. Seed shall be kept in a cool, dry, shaded place until utilized. Contractor shall request seed delivery immediately prior to installation.

C. Plug Container Plants

1. Plug container plants listed on Drawings will be supplied by Owner. Container sizes may vary at time of delivery. For the purposes of bidding, Contractor shall assume container sizes listed on Drawings and submit unit prices for plug container plant installation in Item “Payment.”.

2. Contractor shall coordinate delivery and store and maintain plug container plants per Article 31.01.02.E. Plug Container Delivery Storage and Handling, of these Specifications.

D. Plug Container Plant Substitutions

1. Engineer reserves the right to coordinate with Owner's native plant nursery to substitute plant species of the same size as material specified, until plant material is accepted at delivery, at no additional cost.

E. Plug Container Plant Delivery, Storage, and Handling

1. Contractor shall be responsible for coordination and timing of plant delivery to Project site.

2. Contractor shall coordinate delivery of plants with Owner's native plant nursery at least fifteen (15) working days prior to plant installation. Contractor shall request nursery name and contact information from Engineer.

3. Contractor shall be responsible for the proper storage, handling, and protection of plant materials once they are delivered to Project site.

4. Contractor shall maintain plant materials in a healthy condition at all times. Contractor shall protect plants from sun and drying winds. Plants that cannot be installed immediately upon delivery shall be kept in the shade, watered, and kept in a secured enclosure that will protect plants from deer browse, vandalism, and/or theft.

5. After delivery, Contractor shall be responsible for replacement of any damaged plant material, as determined by Engineer at no additional cost.

6. After delivery, Contractor shall be responsible for returning containers and container trays to Owner's native plant nursery within sixty (60) days of the delivery date. Contractor shall coordinate with Owner's native plant nursery to arrange for nursery staff to pick-up the containers at the Project site. Containers shall be returned in re-usable condition. If containers are not returned to Owner's native plant nursery within the designated time period, Contractor shall be responsible for paying container fees.

F. Other Materials

1. Bamboo stake: Twenty-four (24) inch long, one-quarter (1/4)-inch diameter.

31.01.03. Soil Preparation

A. Prior to broadcast seeding, the area to receive the Wetland Broadcast Seed Mix shall be prepared as follows:

1. Soil surfaces shall be roughened by scarifying to a depth of two to three (2-3) inches. Surfaces shall be disced or otherwise worked to break all clods to two (2) inches or smaller in size.

2. Contractor shall accompany the Engineer to confirm the soil preparation is adequate. Contractor shall remedy identified areas as needed at no additional cost.

31.01.04. Placement

A. Contractor shall inspect Project site and become familiar with any access requirements, access restrictions, and any other site conditions.

B. Contractor shall coordinate with Engineer to schedule inspections at the following stages:

1. Inspection and acceptance of broadcast seeding.
2. Inspection and acceptance of plug container plants at the time of delivery.
3. Inspection and acceptance of plug container plant layout.
4. During installation of plug container plants.
5. Acceptance of Planting.

C. In addition to the inspections specified, Engineer may make periodic progress inspections.

D. Engineer reserves the right to take and analyze samples of materials for conformity to these Specifications at any time.

E. Broadcast Seeding

1. Timing

a. Broadcast seeding shall occur following soil preparation per Section 23 Preparation Work, of these Specifications.

b. Broadcast seeding shall occur prior to placement of Erosion Control Blanket, per Section 23 Preparatory Work and prior to October 15 of the construction year, as close as possible to the beginning of the rainy season, unless otherwise permitted in writing by Engineer.

c. Wetland Broadcast Seed Mix application shall not take place if temperatures are over ninety (90) degrees Fahrenheit.

2. Layout

   a. Contractor shall broadcast the Wetland Broadcast Seed Mix in the lower and upper floodplain planting zones shown on Drawings.

3. Installation

   a. Apply the seed mix evenly and at the rates specified in Article 31.01.02.B. Wetland Broadcast Seed Mix, of these Specifications.

   b. Immediately after seed application, Contractor shall rake all seed into soil. Rake seed bed lightly to cover seed with one-eighth (1/8)-inch to one-quarter (1/4)-inch layer of soil. Seed cover shall not exceed one-quarter (1/4) inch.

F. Review and Acceptance of Plant Material

1. At time of delivery, Contractor shall be responsible for unloading plant material from nursery trucks.

2. Engineer will review plants upon delivery at Project site. Contractor shall notify Engineer fifteen (15) working days prior to plant delivery to coordinate this review. Engineer reserves the right to approve or reject any materials delivered to Project site.

3. Contractor shall install only material that has been reviewed and accepted by Engineer.

G. Plant Layout

1. Contractor shall coordinate with Engineer a minimum of ten (10) working days prior to plant layout to schedule plant layout inspections and work.

2. Contractor shall mark the extents of planting zone for inspection by Engineer.

3. Upon approval of marked planting zone extents, within each of the planting zones Contractor shall flag plant cluster centers by species as shown on Drawings using a clearly visible, unique flag for each species for inspection by Engineer. Flagging of individual plant locations will not be required.

4. Upon approval of plant cluster center flagging, Contractor shall lay out plants in the field.

5. Within the plant clusters, Contractor shall place individual plants at the on-center spacing shown on Drawings.

6. Engineer reserves the right to make minor adjustments in the layout of all plant material.

H. Plug Container Plant Installation—General

1. Contractor shall not install plug container plants prior to review and acceptance by Engineer upon delivery of plant material to Project site, or install plant material that has been rejected by Engineer.

2. Contractor shall not plant under unfavorable weather conditions. Ambient temperatures shall be between thirty-five (35) and ninety (90) degrees Fahrenheit and wind velocity shall not exceed thirty (30) miles per hour.

3. During plug container plant installation, Contractor shall comply with equipment decontamination procedures outlined in Article 31.01.01.D. Plant Pathogen Infection Minimization, of these Specifications.

4. Contractor shall begin plug container plant installation at one end of the planting area and work in a linear fashion, either upstream or downstream. This process is intended to minimize disturbance of installed plants. Additional efforts shall be made to limit trampling of planting areas, including restricting foot traffic to a single-track pathway where feasible, rather than crisscrossing the planting areas in multiple locations. Workers shall leave the main path only to perform Work at specific locales within the planting area.

I. Plug Container Plant Installation

1. Timing

a. Plug container plants shall be installed after 1 November and prior to 31 December following channel grading per Section 24 Earthwork, and erosion control blanket installation per Section 23 Preparatory Work, unless otherwise permitted in writing by Engineer.

b. Plug container plant installation shall not occur in dry soil.

2. Layout

a. Plug container plants shall be installed in the planting zones and plant clusters shown on Drawings and per 31.01.04.G. Plant Layout, of these Specifications.

3. Installation

a. Where plants are to be installed through erosion control blanket, blanket shall be cross-cut to allow excavation of the planting hole.

b. Planting holes shall be sized as shown on Drawings.

c. Planting holes shall be excavated by hand digging or hand-held augers. Water jets shall not be used for the excavation of planting holes.

d. Remove all rocks greater than three (3) inches in diameter from the excavated soils. Where rock or other hard material prohibits holes from being excavated to the dimensions specified, new holes shall be excavated and the abandoned holes shall be backfilled with the excavated material.

e. Immediately prior to installation, plug container plants shall be thoroughly moistened.

f. Remove plants from containers in such a manner that the root ball is not broken.

g. Do not install plants with damaged root balls.

h. Gently loosen lower one-third (1/3) of root ball prior to installation.

i. Install plants immediately after removal from the container, and minimize the exposure of the root ball to the air while placing the root ball in the ground.

j. Thread bamboo stake from top of root ball through bottom of root ball at an approximately forty-five (45) degree angle as shown on Drawings.

k. Install plants in such a manner that the roots are not restricted or distorted.

l. Install plants in the center of the planting hole and so that their root crowns are at or slightly above grade (approximately 1/4-inch) following planting and soil settlement.

m. Backfill the planting hole and lightly compact to remove air spaces between roots and soil.

n. Tap the rest of the bamboo stake into soil so that three to four (3-4) inches remain above finish grade.

o. Take care to avoid over-compaction of the soil, particularly if soil is damp.

p. Where plug container plants are installed within the erosion control blanket, place cut flaps of the blanket back into place around the plant.

J. Site Cleanup

1. Contractor shall clean-up Project site following planting activities as follows and as directed by Engineer.

a. Reapply broadcast seed to any bare soil areas disturbed during plant installation, as directed by Engineer, per item “Broadcast Seeding” above.

b. Clean Project site and Work area of all containers, packaging, and other debris resulting from plant installation operations.

c. Neatly stack and stockpile all plant containers for pick up by Owner’s native plant nursery.

d. Dispose of all debris legally at licensed disposal facilities.

e. Remove temporary items.

K. Acceptance of Work

1. Engineer will accept Work when all improvements and corrective Work have been performed as specified and to the satisfaction of Engineer.

2. Following inspection and acceptance of the completed Work, Work described in Section 32 Establishment Maintenance of these Specifications shall begin.

31.01.05. Testing

A. No testing is required.

31.01.06. Submittals

A. Contractor shall submit Bid Form No. 9 for their, or their revegetation subcontractor’s, qualifications and experience in performing revegetation work.

B. Wetland Broadcast Seed Mix: Contractor shall submit seed mix certificate, including origin of seed, for approval forty-eight (48) hours prior to commencing soil preparation. This certification submittal shall be approved by the Engineer prior to delivery of any seed to the site.

C. Plug Container Plants:

1. A letter, or appropriate lot tag, from propagule provider stating the botanical name, common name, and provenance to certify that the plants delivered to Project site match those listed on Owner’s nursery order.

D. Planting Completion Memo: Upon completion of plant installation and within ten (10) working days of start of Work in Section 32 Establishment Maintenance, of

these Specifications, Contractor shall submit a memo documenting the final plant quantities by species installed at the Project site. Memo shall include a figure with redline markups of any deviations from the planting layout shown on Drawings.

31.01.07. Measurement

A. Wetland Broadcast Seeding and Planting will not be measured.

31.01.08. Payment

A. Full compensation for furnishing all labor, materials, tools, equipment and incidentals, and for performing all Work involved in broadcast seeding, plant layout, plug container plant installation, and other Work as shown on Drawings, as detailed in these technical specifications, and as directed by Engineer. Engineer will confirm completion of broadcast seeding and planting. All costs shall be included in the lump sum price bid for WETLAND BROADCAST SEEDING AND PLANTING, Bid Item No. 23, if authorized by the District.

B. Unit Prices: Contractor shall submit the following unit prices for this lump sum item. The unit prices shall be used for adding or deleting work at the sole discretion of Engineer without the necessity of remobilizing.

Unit Description	Unit	Quantity	Value	Amount
Plug container plant installation	EA	1		
Broadcast seeding	100 SF	1		

31.02. Landscape Planting

31.02.01. Scope of Work

A. Broadcast seeding shall consist of furnishing all material, labor, and equipment necessary to perform the Work for broadcast seeding as shown on Drawings and as specified herein.

B. Planting shall consist of furnishing all material, labor and equipment necessary to perform the Work for planting as shown on Drawings and as specified herein.

C. The work described in this Section shall be performed in designated planting areas shown on the Drawings and shall include:

1. Site preparation;

2. Plant and seeding material procurement including seeds, plugs, and container plants; delivery, storage, and handling; layout and installation; and soil amendments and mulch; and

3. Cleanup.

D. Plant Pathogen Infection Minimization

1. Contractor shall adhere to the *Guidelines to Minimize Phytophthora Contamination in Restoration Projects*, dated October 2016 (Working Group for Phytophthoras in Native Habitats 2016). This includes but is not limited to decontaminating their equipment, tools, and personnel boots to prevent the introduction of plant pathogens. All equipment shall be cleaned and free of soil from any prior work site before arriving at the Project site. Equipment and tools moved off site and returned later for use within the planting areas shall be decontaminated again. Decontamination of equipment, tools, etc. by the Contractor shall be included in the lump sum price bid for WETLAND BROADCAST SEEDING AND PLANTING, Bid Item No. 23 and no separate payment will be made therefor.

E. Qualifications

1. At the time of bid, Contractor shall provide a copy of California C-27 Contractor's License.

2. The Contractor shall have demonstrated experience with a minimum of three completed projects that included installation of native and drought-tolerant plants, application of seeds, and irrigation system installation.

31.02.02. Materials

A. General

1. Contractor is responsible for furnishing all plant material, sizes, and quantities specified in the Drawings

2. The Contractor may propose substitute plant species and/or container sizes from the material specified if the specified plants are unavailable. Any substitution must be approved by the Engineer.

3. Materials not conforming to these Specifications and requirements shall remain the property of the Contractor and shall be removed from Project site at no additional cost.

4. *Phytophthora* Control and Management: The contracted nursery shall follow best management practices (BMPs) for minimizing the spread of *Phytophthora* species (Working Group for Phytophthoras in Native Habitats 2016, or more current guidance). The Engineer shall have the right to reject the plants provided by the Contractor if the source nursery is deemed to have cases of *Phytophthora*. Any plant replacements required for the project shall be borne by the Contractor.

B. Broadcast Seed Mix

1. Plant list of species and the total pounds of pure live seed for Broadcast Seed Mix is provided in the following table:

Scientific Name	Common Name	Quantity (Pounds of Pure Live Seed)
Achillea millefolium	common yarrow	0.0007
Clarkia purpurea	purple clarkia	0.0024
Danthonia californica	California oatgrass	0.0644
Eschscholzia californica	California poppy	0.0132
Festuca rubra	red fescue	0.0215
Gilia capitata	bluehead gilia	0.0072
Lupinus bicolor	miniature lupine	0.0346
Phacelia distans	distant phacelia	0.0030
Stipa pulchra	purple needle grass	0.0236

2. Percent purity and percent germination are given by the manufacturer and shall be submitted to the Engineer by the Contractor upon delivery.

3. Seed shall be from San Francisco Bay Area ecotypes. If a particular species is not available from San Francisco Bay Area ecotypes, either available seed stock from adjacent counties or alternate plant species may be substituted only upon approval from Engineer.

4. Seed may be available from Pacific Coast Seed, 533 Hawthorn Place, Livermore, CA, (925) 373-4417, or approved equal.

5. Seed shall be kept in a cool, dry, shaded place until utilized. Contractor shall request seed delivery immediately prior to installation.

C. Container Plants and Plugs

1. Container plants and plugs shall be from San Francisco Bay Area ecotypes. If a particular species is not available from San Francisco Bay Area ecotypes, either available plants from adjacent counties or alternate plant species may be substituted only upon approval from Engineer.

2. The container size shall be at least as large as indicated in the plant legends in the drawings. Plants shall not be rejected if supplied in containers larger than specified.

3. Engineer reserves the right to substitute plant species of the same size as material specified, until plant material is accepted at delivery, at no additional cost.

4. Upon removal of the plants from the containers, the soil/root masses shall be the size of the specified container size. If the soil/root masses are substantially smaller than the specified container size and loose soil exists on the bottom of the containers, the plants shall be rejected since they have not been grown sufficiently long in the containers to root into the soil contained therein.

5. Should spiraling roots exist on the outside of the soil/root mass upon the removal of the plants from the containers, the Contractor shall be instructed to either cut these roots or separate and spread them out from the soil/root mass prior to planting.

6. The plants shall appear healthy with no leaf spots, leaf damage, leaf discoloration, chlorosis, leaf wilting or curling, or evidence of insects on the leaves. If dormant, woody plants shall have an abundance of well-developed terminal buds on the leaders and branches, and have a cambium which is light green to yellowish green in color.

7. The soil and root mass of containerized plant material shall be saturated upon delivery to the job site. Plants that are dry or lightweight shall be rejected. If not planted immediately after delivery to the job site, the plants shall be stored in an area that is not exposed to direct sun or wind and shall be maintained moist, through periodic watering, until time of planting.

8. Contractor shall coordinate delivery and store and maintain container plants and plugs per Article 31.02.02.D. “Container Plant and Plug Delivery, Storage, and Handling” of these Specifications.

D. Container Plant and Plug Delivery, Storage and Handling

1. Contractor shall be responsible for coordination and timing of plant delivery to Project site.

2. Contractor shall be responsible for the proper storage, handling, and protection of plant materials once they are delivered to Project site.

3. Contractor shall maintain plant materials in a healthy condition at all times. Contractor shall protect plants from sun and drying winds. Plants that cannot be installed immediately upon delivery shall be kept in the shade, watered, and kept in a secured enclosure that will protect plants from deer browse, vandalism, and/or theft.

4. After delivery, Contractor shall be responsible for replacement of any damaged plant material, as determined by Engineer at no additional cost.

E. Other Materials

1. Mulch: Mulch shall be organic, weed-free mulch with a one-half (½) inch minimum and three (3) inch maximum particle size and low salt content. Mulch shall not be made of plant materials with allopathic chemicals. Mulch shall be made from recycled, kiln-dried wood products. The Contractor shall submit sample and mulch analysis for approval by Engineer.

31.02.03. Soil Preparation

A. Subsequent to site clearing and grubbing and prior to broadcast seeding and container plant and plug installation, the area shall be prepared as follows:

1. Soil surfaces shall be roughened by scarifying to a depth of two to three (2–3) inches. Surfaces shall be disced or otherwise worked to break all clods to two (2) inches or smaller in size.

2. Contractor shall accompany the Engineer to confirm the soil preparation is adequate. Contractor shall remedy identified areas as needed at no additional cost.

31.02.04. Placement

A. Contractor shall inspect Project site and become familiar with any access requirements, access restrictions, and any other site conditions.

B. Contractor shall coordinate with Engineer to schedule inspections at the following stages:

1. Inspection and acceptance of broadcast seeding.

2. Inspection and acceptance of container plants and plugs at the time of delivery.

3. Inspection and acceptance of container plants, plugs, and plant layout.

4. During installation of container plants and plugs.

5. Acceptance of Planting.

C. In addition to the inspections specified, Engineer may make periodic progress inspections.

D. Engineer reserves the right to take and analyze samples of materials for conformity to these Specifications at any time.

E. Broadcast Seeding

1. Timing

   a. Broadcast seeding shall occur following installation of irrigation (Article 31.01.03. Soil Preparation) and soil preparation. The water supply and irrigation system shall be complete and operational prior to planting to the satisfaction of the Engineer.

   b. Broadcast seeding shall occur prior to 15 October of the construction year, as close as possible to the beginning of the rainy season, unless otherwise permitted in writing by Engineer.

   c. Broadcast Seed Mix application shall not take place if temperatures are over ninety (90) degrees Fahrenheit.

2. Layout

   a. Contractor shall broadcast the Seed Mix in the north planting zone shown on Drawings.

3. Installation

   a. The Contractor shall apply the seed mix evenly and at the rates specified in Section 31.02.02.B. “Broadcast Seed Mix”, of these Specifications.

   b. Immediately after seed application, Contractor shall rake all seed into soil. Contractor shall rake seed bed lightly to cover seed with one-eighth (1/8)-inch to one-quarter (1/4)-inch layer of soil. Seed cover shall not exceed one-quarter (1/4) inch.

F. Review and Acceptance of Container Plant and Plug Material

1. At time of delivery, Contractor shall be responsible for unloading plant material from nursery trucks.

2. Engineer will review landscape plants prior to their leaving the source nursery. Contractor shall submit photographs representative of the range of species and inventory conditions, including overall nursery growing conditions, above-ground plant conditions, and below-ground/root conditions. The objective of this review is to help ensure that plantings are healthy, risk of introducing or spreading plant pathogens is acceptably low, and long-term plant establishment and growth will be successful. If inventory photographs suggest that these objectives may not be met, Engineer reserves the right to reject some or all of the inventory.

3. Engineer will review plants upon delivery at Project site. Contractor shall notify Engineer fifteen (15) working days prior to plant delivery to

coordinate this review. Engineer reserves the right to approve or reject any materials delivered to Project site.

4. Contractor shall install only material that has been reviewed and accepted by Engineer.

G. Plant Layout

1. Contractor shall coordinate with Engineer a minimum of ten (10) working days prior to plant layout to schedule plant layout inspections and work.

2. Contractor shall mark the extents of planting zone for inspection by Engineer.

3. Upon approval of marked planting zone extent, Contractor shall flag plant centers by species as shown on Drawings using a clearly visible, unique flag for each species for inspection by Engineer.

4. Upon approval of plant center flagging, Contractor shall lay out plants in the field.

5. Engineer reserves the right to make minor adjustments in the layout of all plant material.

H. Container Plant and Plug Installation—General

1. Contractor shall not install container plant or plugs prior to review and acceptance by Engineer upon delivery of plant material to Project site, or install plant material that has been rejected by Engineer.

2. Contractor shall not plant under unfavorable weather conditions to avoid stressing the plants. When excessive moisture, winds, or other unsatisfactory conditions prevail, the work shall be stopped when directed by the Engineer. Ambient temperatures shall be between thirty-five (35) and ninety (90) degrees Fahrenheit and wind velocity shall not exceed thirty (30) miles per hour.

3. During container plant and plug installation, Contractor shall comply with equipment decontamination procedures outlined in Article 31.02.01.D. “Plant Pathogen Infection Minimization”, of these Specifications.

4. Contractor shall begin container plant and plug installation in the areas furthest from the access point. This process is intended to minimize disturbance of installed plants. Additional efforts shall be made to limit trampling of planting areas, including restricting foot traffic to a single-track pathway where feasible, rather than crisscrossing the planting areas in multiple locations. Workers shall leave the main path only to perform Work at specific locales within the planting area.

I. Container Plant and Plug Installation

1. Timing

a. Container plants and plugs shall be installed between 15 October and 31 December following staging area use, irrigation installation (Article 31.01.02. Soil Preparation), and soil preparation, unless otherwise permitted in writing by Engineer.

b. Container plant and plug installation shall not occur in dry soil.

2. Layout

a. Container plant and plugs shall be installed in the planting zone shown on Drawings and per 31.02.04.G. Plant Layout, of these Specifications.

3. Installation

a. Planting holes shall be sized as shown on Drawings. Planting holes shall be excavated by hand digging or hand-held augers. Water jets shall not be used for the excavation of planting holes. The Contractor shall prepare a hole that is the depth of the container and 1.5 to 2 times the diameter of the root ball and loosen 2–3 inches of soil at the bottom of the planting hole to facilitate initial root growth. Container plant planting holes shall be flat-bottomed, as any remaining air pockets at the bottom of the holes may lead to plant mortality.

b. All rocks greater than three (3) inches in diameter shall be removed from the excavated soils. Where rock or other hard material prohibits holes from being excavated to the dimensions specified, new holes shall be excavated and the abandoned holes shall be backfilled with the excavated material.

c. Immediately prior to installation, container plants and plugs shall be thoroughly moistened.

d. The Contractor shall not install plants with damaged root balls.

e. The Contractor shall remove plants from containers in such a manner that the root ball is not broken and gently loosen lower one-third (1/3) of root ball prior to installation.

f. The Contractor shall install plants immediately after removal from the container and minimize the exposure of the root ball to the air while placing the root ball in the ground.

g. The Contractor shall install plants in such a manner that the roots are not restricted or distorted.

h. The Contractor shall install container plants in the center of the planting hole and so that their root crowns are at or slightly above grade (approximately 0.5–1 inch) following planting and soil settlement. The planting holes shall be backfilled with native soils and lightly compacted to remove air spaces between roots and soil. The replaced soil shall be watered in and boot compacted to eliminate air pockets. The Contractor shall take care to avoid over-compaction of the soil, particularly if soil is damp. Leftover soils from creating the planting holes shall be used to create watering basins or raked about the plants in a manner which matches the surrounding grade.

i. Plugs shall be planted in planting holes slightly deeper than the length of the plugs and inserted so that the top of the plug soil is at least 0.5 inches below the adjacent native soil. The Contractor shall firm soil around plugs and cover all nursery soil with 0.5 inch of native soil.

J. Mulch

1. The Contractor shall install an approximate three-inch layer of mulch at the site. Contractor shall keep mulch 2–6 inches away from plant stems.

K. Watering

1. Newly planted trees, shrubs, and herbaceous plants (container plants) shall be watered regularly to prevent plant material from wilting. All container plants and plugs shall be planted after the automatic irrigation system has been installed and tested. In the case that this is not possible, container plants and plugs shall be watered from the time that they are planted until the time that the automatic irrigation system is in operation. Watering shall be incidental to this item.

L. Site Cleanup

1. Contractor shall clean up the Project site following planting activities as follows and as directed by Engineer.

a. Reapply broadcast seed to any bare soil areas disturbed during plant installation, as directed by Engineer, per Article 31.02.04. E. “Broadcast Seeding” above.

b. Clean Project site and Work area of all containers, packaging, and other debris resulting from plant installation operations.

c. Neatly stack and stockpile all plant containers for pick up by Owner's native plant nursery.

d. Dispose of all debris legally at licensed disposal facilities.

e. Remove temporary items.

M. Acceptance of Work

1. Engineer will accept Work when all improvements and corrective Work have been performed as specified and to the satisfaction of Engineer.

2. Following inspection and acceptance of the completed Work, Work described in Article 32.01 Establishment Maintenance, of these Specifications shall begin.

31.02.05. Testing

A. All Work in this Section shall comply with the following:

1. Plant names: All plant material shall be true to botanical and common name as indicated in: Jepson Flora Project (eds.) 2020. Jepson eFlora, http://ucjeps.berkeley.edu/eflora/.

2. Plant Material Standards: American Standard for Nursery Stock, ANSI Z60.1. American Nursery and Landscape Association, 1250 Eye Street. NW, Suite 500, Washington, DC 20005.

3. All standards shall include the latest additions and amendments as of the date of advertisement for bids.

31.02.06. Submittals

A. Contractor qualifications, per Article 31.02.01.E. "Qualifications" of these Specifications. Prospective bidders shall submit three (3) examples of similar projects completed within the past five years. Project information shall include:

1. Name and location of project;
2. Owner/project manager name, phone number, and email address;
3. Project cost; and
4. Description of services provided (including subcontractors).

B. Broadcast Seed Mix: Contractor shall submit seed mix certificate, including origin of seed, for approval forty-eight (48) hours prior to commencing soil preparation. This certification submittal shall be approved by the Engineer prior to delivery of any seed to the site.

C. Container Plants and Plugs:

1. A letter, or appropriate lot tag, from propagule provider stating the botanical name, common name, and provenance to certify that the plants delivered to Project site match those listed on nursery order.

2. Contractor shall submit photographs representative of the range of species and inventory conditions, including overall nursery growing conditions, above-ground plant conditions, and below-ground/root conditions.

3. Nursery Records: See Article 31.02.02.A.4 “General: *Phytophtora* Control and Management.”

D. Submit sample and mulch analysis for approval by Engineer.

E. Planting Completion Memo: Upon completion of plant installation and within ten (10) working days of start of Work in Section 31.03 Establishment Maintenance, of these Specifications, Contractor shall submit a memo documenting the final plant quantities by species installed at the Project site. Memo shall include a figure with redline markups of any deviations from the planting layout shown on Drawings.

31.02.07. Measurement

A. Broadcast Seeding and Planting will not be measured.

B. Landscape planting shall be measured on the basis of the number of individual container/plug plantings.

31.02.08. Payment

A. Full compensation for furnishing all labor, materials, tools, equipment and incidentals, and for performing all Work involved in broadcast seeding, plant layout, container plant and plug installation, and other Work as shown on Drawings, as detailed in these technical specifications, and as directed by Engineer. Engineer will confirm completion of broadcast seeding and planting. All costs shall be included in the lump sum price bid for WETLAND BROADCAST SEEDING AND PLANTING , Bid Item No. 23, if authorized by Valley Water.

B. Unit Prices: Contractor shall submit the following unit prices for this lump sum item. The unit prices shall be used for adding or deleting work at the sole discretion of Engineer without the necessity of remobilizing.

Unit Description	Unit	Quantity	Value	Amount
Broadcast seeding	100 SF	1		
Container plant installation	EA	1		
Plug installation	EA	1		

31.03. Irrigation

31.03.01. Scope of Work

A. Irrigation shall consist of furnishing all material, labor, and equipment necessary to perform the Work for the irrigation system as shown on the Drawings and specified herein. The Work of this Section includes furnishing, installing, and testing a complete irrigation system including pipe, dripline, valves, controller, and backflow device, including installing sleeves for irrigation and wiring under pavement and maintaining the irrigation system through the maintenance and establishment period.

B. Equipment Decontamination: To prevent the introduction of plant pathogens, prior to mobilization on-site, Contractor shall decontaminate their equipment per Article 31.01.01.D. *Plant Pathogen Infection Minimization* including decontamination of equipment before entering the job site and before returning to the job site after use on another job site.

1. Vehicles, heavy machinery, and large tools (such as excavators, trenchers, graders, including tires, tracks, undercarriage of on-site vehicles, and their tools and implements) shall be cleaned free of debris and soil with high pressure washer and/or compressed air from any prior work site prior to arriving to the Project site.

2. Footwear and small tools (such as hand tools, shovels, trowels, hoes, and personnel boots) shall be thoroughly cleaned of debris and soil and then wiped with seventy (70) percent ethanol or isopropanol prior to use within the planting area.

3. Equipment and tools moved off-site and returned later for use within the planting area will again require decontamination by the Contractor.

4. Decontamination of equipment, tools, etc. by the Contractor shall be included in the lump sum price bid for WETLAND BROADCAST SEEDING AND PLANTING, Bid Item No. 23 and no separate payment will be made therefor.

C. All work and materials to be in full accordance with latest rules and regulations of the Division of Industrial Safety; the Uniform Plumbing Code; National Electric Code; Americans with Disabilities Act, and other applicable laws or regulations, including all local codes.

D. Qualifications: See Article 31.01.01.F. *Qualifications* for Contractor qualifications and related submittals.

31.03.02. Materials

A. Provide new products in perfect condition. Pipes, lines, and fittings shall follow sizes indicated on Drawings.

B. Pipe:

1. Mainline Pipe: three (3) inches and smaller: polyvinyl chloride (PVC) 1120-1220, Type 1 Schedule 40 solvent weld and shall conform to ASTM D1785.

2. Lateral Pipe: Polyvinyl chloride (PVC) 1120 1220, Class 200 solvent weld and shall conform to ASTM D2241.

3. Flexible Polyethylene Tubing with Inline Emitters: Netafim as shown in plans, conforming with ISO 9261 Standard Compliance.

4. Steel Pipe: Galvanized, standard weight, Sch. 40, complying with the requirements of ASTM A120.

C. Fittings and Nipples:

1. PVC Fittings and Nipples: Schedule 40 or 80 (as shown on Drawings), standard weight, as manufactured by Pacific Western, Simpson, Lasco, or approved equivalent, to meet ASTM D2466, D2464 and D2467.

2. Flexible Nipples: Flexible PVC with Schedule 40 PVC male adapters at each end, factory made, to meet ASTM D2287.

3. Above Grade Risers: As shown on Drawings.

4. Anchorages: Clamps, straps, and washers: steel, ASTM A506; bolts: steel, ASTM A 307.

D. Fitting compounds, solvents, and wraps:

1. Primer and glue: As recommended by manufacturer of pipe being installed.

2. Thread sealant: Non-hardening sealant compatible with pipe being installed. Permatex 51 or equivalent. Do not use thread lubricant on PVC pipe.

3. Teflon tape: For PVC male threads.

4. Solvent for PVC pipe: ASTM D2564, gray.

5. RectorSeal No. 5 for galvanized steel, iron, brass or copper pipe.

E. Thrust blocks

1. Portland cement, bearing load of 24,000 KPa (2,000 pounds per square foot) (Caltrans Class C).

F. Wire

1. Common and Control Wire: U.L. approved for direct burial, copper, AWG-UF 600 volt No.14 minimum size. All Common wire shall be the same color. Common and control wire shall be different colors.

2. Splicing Materials: Packaged kit approved for underground use such as Gel-Tite King Silicone-filled Safety, Kin One-Step Connector, Spears Dry Splice DS 100 with DS 300 sealant or equivalent.

G. Sleeves and conduit:

1. General: Size sleeves one (1) inch larger than outside diameter of irrigation pipe fittings.

2. PVC Sleeves: PS 21, Type II, Grade I, Schedule 40 PVC.

3. PVC Conduit: UL Listed, Schedule 40 PVC electrical conduit.

4. Galvanized Steel Sleeve: Where placed by jacking or boring use galvanized steel pipe conforming to ASTM A53.

H. Valve boxes:

1. Heavy duty plastic with lockable lids. Ametek, Brooks, Carson, or equivalent. Size for control valves 14 inches x 19 inches; for gate valves ten (10) inch round, unless noted otherwise on Drawings. Provide one box for each control valve.

I. Keys:

1. Provide two sets for controller cabinet; for quick coupling valves provide minimum one key and matching hose swivel for every five quick couplers installed.

J. Check valves:

1. Built into head by manufacturer or adjustable PVC check valves as per Valcon, King Brothers, Flo Control, or equivalent installed in riser.

K. Substitutions

1. Substitutions must have written approval and should equal the standard of products specified herein.

2. Installation of any approved substitution is Contractor's responsibility. Any changes required for installation of any approved substitution must be made to the satisfaction of the Engineer and at no additional cost.

3. Approval by Engineer of substituted equipment does not waive these requirements.

31.03.03. Installation

A. The irrigation system shall be in place and operating prior to plant installation, or as approved by the Engineer. Any watering necessary to maintain plant health due to not meeting this schedule shall be provided from this date until the time that the irrigation system is in operation without extra cost to the Owner. The Contractor shall schedule and coordinate placement of materials and equipment in a manner to affect the earliest completion of work in conformance with construction and progress schedule.

B. Connections to Existing Water Pipeline: see Drawings. Tap water main with size and in location as required in accordance with requirements of governing jurisdiction. Provide curb box as required by local regulations. Contractor is responsible for tapping fees for connection to the water main.

C. Handling and Storage:

1. Protect work and materials from damage during construction and storage as directed by Engineer.

2. Handle plastic pipe carefully; especially protect it from prolonged exposure to sunlight.

3. Furnish and maintain all warning signs, shoring, barricades, red lanterns, and other equipment as required by the Division of Industrial Safety and local ordinances. Mark open trenches and piles of dirt.

D. Layout:

1. Layout work as accurately as possible using stakes and different colored flags to indicate different types of heads and valves in accordance with Drawings.

2. The irrigation drawings are a schematic design to the extent that swing joints, offsets and all fittings are not shown and may require adjustment.

a. Adjust layout as required to conform to existing site conditions and avoid conflict with trees, light standards and other site elements.

b. Do not install the irrigation system as shown if it is evident that obstructions, grade differences, or differences in area dimensions create conditions different than anticipated in the design. Bring all such obstructions or differences to the attention of the Engineer.

c. Where site conditions do not permit location of piping, valves and heads where shown, notify Engineer immediately and determine relocation in joint conference.

3. Take care to coordinate layout of irrigation bubbler heads with planting layout.

4. Full and complete coverage is required. Make any necessary minor adjustments to achieve full coverage at no additional cost.

E. Trench and Pipe Routing: Where possible, place main line, lateral line pipe, flex hose, wire and section piping in the same trench. Place all pipelines a minimum of three (3) feet from the edge of concrete sidewalks, curbs, guardrail, fences, traffic barriers or walls unless otherwise approved by the Engineer.

1. Restore surfaces, existing underground installations, etc., damaged or cut as a result of excavations, to original conditions in manner approved by Engineer.

2. Where other utilities interfere with irrigation trenching and pipe work, adjust the trench depth as instructed by Engineer.

F. Trenching:

1. Perform all excavations as required for installation of work included under this Section, including shoring of earth banks, if necessary. Restore to their original condition all surfaces and existing underground utilities damaged or cut as a result of the excavation.

2. Dig trenches wide enough to allow a minimum of three (3) inches between parallel irrigation pipelines (twelve [12] inches from pipe of other trades). Do not install pipe directly over other lines in same trench. If unforeseen bedrock is encountered during excavation immediately bring it to the attention of the Engineer.

a. Dig trenches of sufficient depth to provide minimum cover from finish grade as follows:

(1) Mains: 18 inches
(2) Laterals: 15 inches
(3) Polyethylene Tubing: 3 inches
(4) Wire: 18 inches
(5) Under traffic loads: 30 inches

b. Install all pipe under paving in sleeve or bedded in six (6) inches of sand around all sides.

3. All live main lines buried under hard surface areas (roads, paths, etc.) shall have a copper tracer wire incorporated in the trench. Remote control

valve wiring can act as a tracer in instances where it is included in the main line runs. Pressure lines to quick coupler valves are considered live mains.

4. Should existing paving require cutting, saw cut paving a minimum twelve (12) inches wide, compact backfill to equal surrounding undisturbed soil, dispose of waste off site. Patch to match existing pavement.

G. Exercise care when excavating near existing trees. Where roots are two (2) inches and greater in diameter, except in the direct path of the pipe, hand excavate and tunnel the pipe trench. When large roots are exposed, wrap them with heavy burlap for protection and to prevent excessive drying. When digging trenches by machine adjacent to trees having roots two (2) inches and less in diameter, hand trim the sides of the trench, making a clean cut of the roots. Treat all cut and trimmed roots 1/2 inch or larger in diameter with an approved tree wound dressing. Backfill trenches having exposed tree roots within 24 hours unless protected by continuously moist burlap or canvas.

H. Sleeving and conduit:

1. Install sleeves where control wires and pipe pass through or under walls, under paving and as required to facilitate a smooth construction sequence.

2. Provide separate sleeve for each pipe. Wire may be grouped and installed in single conduit.

3. Extend sleeves a minimum of twelve (12) inches beyond edges of walls, walks and other paving.

4. Coordinate sleeve installation with other trades.

I. Pipeline assembly:

1. General:

a. Install pipe in accordance with manufacturer's instructions and per ASTM D2774 and D2855. Bend PVC pipe twelve (12) inches and smaller to allow for slight changes in direction. Axial deflection at the pipe joints will not be allowed. Use fittings for joint deflections greater than the manufacturer’s recommendation.

b. Assemble all pipes free of dirt and pipe scale. During construction, plug or cap pipe ends to prevent entry of dirt, rocks and other debris. Field cut ends shall be reamed only to full pipe diameter with rough edges and burrs removed.

c. Place no closer than four (4) inches to walk edges and eight (8) inches to buildings and walls.

d. Where pipe of dissimilar metals are connected, use dielectric fittings.

e. Install thrust blocks at all changes in alignment and at ends of bell joint lines as required to prevent damage from water hammer. All fittings must be accessible.

2. PVC Solvent Weld Pipe:

a. Solvent weld PVC pipe and fittings using solvents and methods recommended by manufacturer. Clean pipe and fittings of dirt and moisture before assembly. PVC pipe may be assembled on ground surface beside trench. Snake pipe from side to side in bottom of trench to allow for expansion and contraction.

b. Do not cut PVC pipe with a hacksaw. Use pipe cutters or other method which does not result in burrs.

c. Polyethylene Tubing: Install per manufacturer's recommendations.

d. PVC Threaded Pipe:

(1) Make all connections between PVC pipe and metal valves or pipe with threaded fittings using PVC male adapters.

(2) Use thread sealant (not thread lubricant) on threaded PVC connections and assemble the joint to hand tight. Do not overtighten.

J. Quick coupling valves: Locate quick couplers within twelve (12) inches of remote control valve boxes wherever practical. If not near a valve, locate at edge or other element to facilitate locating in the field.

K. Remote control valves:

1. Install control valves in valve boxes where shown and group together where practical. Place no closer than four (4) inches to walk edges, buildings and walls. Maximum twelve (12) inches from path edge wherever possible.

2. Limit one control valve per box. Set valve boxes flush with finish grade and parallel to edge of paving. Fill bottom of box four (4) inches deep with 3/4-inch diameter drain rock.

3. Label each valve with polyurethane I.D. Tag attached to valve wire. Christy Standard Tag, or equivalent.

L. Controller:

1. If used: Install per manufacturer's instructions and local code.

2. Provide a GFI switch on the power source. Wire controller to protected side, 15 amp minimum.

3. Install all exposed wire to and 24 inches minimum beyond controller within U.L. approved rigid steel conduit.

4. Ground controller.

5. Controller mounting:

   a. Wall Mount Controller: Install at eye level in exact location as approved by Engineer.

   b. Pedestal Mounted Controller: Bolt pedestal to pre-cast concrete pad four (4) inches above finish grade. Do not embed pedestal in concrete.

6. Connect remote control valves to controller in sequence as noted on Drawings.

7. Label valve wires at controller with non-fading label.

8. Prepare controller chart describing what area is covered by each valve.

M. Ball valve:

1. Install in valve box with extensions as required. Set box flush with finish grade. Fill bottom of box with four (4) inches of 3/4-inch diameter drain rock.

N. Backflow device:

1. If required: Install per code and manufacturer's specifications.

2. Provide pipe supports and accessories as necessary to properly secure the assembly. After installation, apply acceptable corrosion-retarding material to surfaces of ferrous anchorages.

3. Install within protective enclosure.

O. Control wiring:

1. Install control wires in common trench with main. Lay to the side of pipe and snake wires in trench to allow for contraction of wires. Tie wires in bundles at ten (10) foot intervals. Provide 24 inches of coiled slack at valves.

2. Wire splices to be crimped and sealed with specified splicing materials. Line splices will be allowed only on runs of more than 500 feet, and must occur in splice box.

P. Check valves: Install per manufacturer's instructions on all low heads as necessary to control line drainage.

Q. Closing pipes and flushing lines:

1. Cap or plug all openings as soon as lines have been installed to prevent entrance of materials that would obstruct the pipe. Leave in place until removal is necessary for completion of installation.

2. Thoroughly flush all water lines before installing nozzles or valves.

R. Backfilling and compacting:

1. Keep the top six (6) inches of topsoil, separate from subsoil, and replace this topsoil as the top layer when backfilling.

2. Backfill only after piping has been tested, inspected, and approved. Complete backfilling as soon as possible after approval. Ensure that backfill material placed within the pipe is earth excavated from trenches and free of rocks or other unsuitable material that might cut or otherwise damage the pipe. Fill directly around the pipe with clean dry sand.

3. Compact backfill for trenches to equal surrounding undisturbed soil.

4. Dress off all areas to finish grades. Adjust grades if settlement occurs.

S. Cleanup: When work within this section has been completed at other times as may be directed, remove all trash, debris, surplus materials and equipment from site.

T. Adjusting: Prior to Final Acceptance, adjust and regulate entire system. Set watering schedule on controller appropriate to type of plant and season of year. Adjust remote control valve to operate heads at optimum performance based on pressure.

31.03.04. Testing

A. Acceptance Criterion for Materials and Workmanship: The Engineer shall inspect all materials and workmanship for compliance with the plans and specifications. Acceptance of all materials and workmanship is at the discretion of the Engineer. Notify Engineer at least three (3) days in advance of testing.

B. Perform tests as specified below. Remake any faulty joints with all new materials. Use of cement or caulking to seal leaks is absolutely prohibited.

1. Pressure tests:

   a. After laying but before backfilling, test irrigation pipe for leakage. Allow glued connections to dry minimum 24 hours, remove air from lines, and center load pipe before beginning test.

   b. For Mains: Cap off valve risers and test under full static pressure for a minimum of four (4) hours. Perform test prior to installing remote control valves. Repair all leaks.

   c. At contractor's option a 1-hour pressure test at 850 KPa (125 psi) may be substituted for the above test. Provide the necessary pump and equipment required for this test. Maximum 20 KPa (3 psi) loss permitted.

   d. For Laterals: Pressure test laterals with risers capped at static pressure for one (1) hour. Minor leaks in swing joints and sprinkler riser assemblies will be acceptable.

2. Coverage test: After all risers and heads are installed, check for complete and even coverage of the planting area and minimum overthrow onto paved surfaces, buildings and fences. Make adjustments and change nozzle sizes as required.

3. Operation test: Prior to the start of the Maintenance Period set the controller on automatic operation and irrigate automatically throughout the Maintenance Period.

31.03.05. Submittals

A. Request for Materials Substitution: Submit make and model information for materials that are requested for substitution. No substitution will be permitted without prior written approval by the Engineer. Complete material list shall be submitted prior to performing any work.

B. Recommended Watering Schedule: Use the initial irrigation schedule described on the drawings. Operate and maintain the irrigation system during the three-year maintenance period. Adjust schedule to maximize plant health.

C. Irrigation Manufacturer's Information Manual: After the system has been installed and approved, complete an operation and maintenance manual of the irrigation system and provide the following in a bound and dated manual titled "Lower Calera Creek Landscaping Manual" and sub-titled "Irrigation Manufacturer's Information Manual".

   1. Contractor's name, address, telephone number and name of person to contact.

2. Information for each equipment, including:

   a. Manufacturer's Name;

   b. Make and model number;

   c. Name and address of local manufacturer's representative;

   d. Spare parts list; and

   e. Detailed operating and maintenance instructions as per manufacturer.

31.03.06. Measurement

A. System layout: Provide reduced prints of As-built irrigation plan, laminated in plastic, of size to fit controller door. Affix plans to inside of controller door.

31.03.07. Payment

A. Full compensation for furnishing all labor, materials, tools, equipment and incidentals, and for performing all Irrigation Work as shown on Drawings, as detailed in these technical specifications, and as directed by the Engineer. The Engineer will confirm completion of Irrigation. All costs shall be included in the lump sum price bid for WETLAND BROADCAST SEEDING AND PLANTING, Bid Item No. 23, if authorized by Valley Water.

END OF SECTION

SECTION 32. ESTABLISHMENT MAINTENANCE

32.01. Establishment Maintenance—Bid Item No. 24

32.01.01. Scope of Work

A. Establishment maintenance shall consist of furnishing all material, labor, and equipment necessary to perform Work for the three (3)-year establishment maintenance period of the planting zones, vegetation maintenance along the creek bank and maintenance roadways, and low flow channel maintenance, as shown on Drawings and as specified herein.

B. Vegetation maintenance along the creek bank shall consist of mowing and weed control within the channel slopes necessary to maintain grasses annuals to no more than 6-inches during the three (3)-year planting establishment period. Mowing shall be scheduled to reduce risk of fire, maximize seed set of hydroseed species, and facilitate vegetative cover of at least 60% on levee slopes. Contractor shall conduct necessary biological surveys prior to mowing. Vegetation maintenance shall also consist of treatment of any woody or invasive vegetation that recruits on the creek banks during the three (3)-year planting establishment period.

C. Vegetation maintenance along the maintenance roadways and shoulder areas of the project site shall consist of mowing and weed control necessary to maintain vegetation free maintenance roads and shoulder areas during the three (3)-year planting establishment period.

D. Low-flow channel maintenance shall consist of all work, materials, and supplies necessary to maintain the un-vegetated or only sparsely vegetated condition of the as-built low-flow channel, during the three (3)-year establishment maintenance period to help maintain the flow capacity of the channel. In particular, woody and invasive species should be promptly removed and/or treated from the low flow channel. Contractor shall conduct necessary biological surveys prior to vegetation management.

   1. Vegetation shall not be allowed to establish or thrive within the minimum 6-foot-wide channel bottom. Contractor shall inspect the channel bottom in March of each of the three (3)-year establishment maintenance period and submit a list vegetation observed. If vegetation is observed that may reduce the flow capacity of the channel, such as dense patches of cattails (*Typha* species), the Contractor shall treat and/or remove the obstructing vegetation in accordance with these specifications and in compliance with Project permits (Appendix C).

E. Maintain invasive plants and non-native annuals to no more than 10% cover of seeded/planted areas. Invasive plants are those listed in Table 32.01-2 “Invasive Species List for Lower Calera Flood Protection Project.” Invasive weed treatment methods and schedule should be selected based on the invasive weeds present. Conduct necessary biological surveys prior to invasive weed treatment.

F. The Work of this Section includes preparing a maintenance schedule and logbook, conducting maintenance inspections, running and maintaining the irrigation system(s), installing supplemental container plants, grass and weed/non-native grass mowing events, conducting target invasive plant inspections, conducting target invasive plant control events (potentially including herbicide application), pruning landscape plantings as necessary, and removing trash from landscape planting areas.

G. Timing and Coordination

1. Contractor shall request and receive approval from Engineer prior to commencement of the three (3)-year establishment maintenance period. The three (3)-year establishment maintenance period shall begin upon acceptance of Work described in Article 31.01.04.K. Acceptance of Work, of these Specifications and by Engineer and continue for three (3) years.

2. Contractor shall request approval from Engineer for completion of the three (3)-year establishment maintenance period. Completion of the three (3)-year establishment maintenance period shall be confirmed in writing by Engineer.

H. Project Conditions and Quality Control

1. Establishment maintenance work may occur in saturated soils. Contractor shall provide and employ appropriate materials and techniques for working in these site conditions. Contractor shall provide and employ plywood, mud boots, or other methods approved by Engineer as necessary to protect wetland surfaces from damage created by foot traffic or equipment use.

2. Contractor shall demonstrate to Engineer the ability to differentiate native plants from non-native plants.

3. Herbicides shall only be applied by a qualified applicator licensed to apply commercial herbicides.

4. Contractor shall be responsible for worker safety when accessing planting area per Section 17 Safety and Security, of these Specifications.

I. Wildlife Protection and Equipment Decontamination

1. During establishment maintenance activities, Contractor shall provide wildlife protection per permits in Article 18.01.01. District-Obtained Permits.

2. During establishment maintenance activities, Contractor shall implement equipment decontamination procedures per Section 31 Wetland Broadcast Seeding and Planting, and Article 31.01.01.D. Plant Pathogen Infection Minimization, of these Specifications.

32.01.02. Materials

A. Materials not conforming to these Specifications and requirements shall remain the property of Contractor and shall be removed from Project site at no additional cost.

B. Supplemental Container Plants and Plugs

1. Supplemental container plants and/or plugs will be supplied by Contractor per Section Planting, Article 31.01.02.C. Plug Container Plants, and 31.01.02.D. Plug Container Plant Substitutions. Contractor shall assume fifteen (15) percent supplemental plug container plants in year one (1) and ten (10) percent in year two (2) of the three (3)-year long-term maintenance period.

C. Supplemental Container Plant Delivery, Storage, and Handling

1. Supplemental container plants and plugs shall be delivered, stored, and handled per Article 31.01.02.E. Plug Container Plant Delivery, Storage, and Handling.

D. Herbicides

1. Herbicides shall be delivered to Project site undamaged, unopened, and in original containers bearing manufacturer's label, warranty, and directions for application.

2. All herbicides shall be approved by Engineer and the Environmental Protection Agency for use in aquatic settings.

3. Herbicides shall be per the licensed Pest Control Advisor's written recommendation to be submitted to Engineer for approval per Article 32.01.05. Submittals, of these Specifications. The following recommended herbicides and concentrations are provided for the purposes of bidding. Trade names are used for convenience and do not constitute an endorsement of this particular product.

a. For perennial pepperweed (*Lepidium latifolium*), the recommended herbicide is Habitat® (twenty-eight point seven (28.7) percent isopropylamine salt of imazapyr in water).

b. For all other invasive plants, recommended herbicides shall be determined by a licensed Pest Control Advisor.

E. Other Materials

1. Herbicide indicator dye or foam marking agents shall be compatible with the herbicide(s) used.

2. Bamboo stake per Article 31.01.02.F. Other Materials.

F. Grass and Weed/Non-Native Mowing Events

1. A mowing event shall consist of mowing grass planted during hydroseeding the project site and weeds and/or non-native grass vegetation. Areas for mowing events include the channel slope between the top of the bank and the toe of the bank on both sides of the creek, the shoulder between the streamside edge of the maintenance road and the top of bank on both sides of the creek, and areas between the outside edge of the maintenance road and the District property line.

2. Mowing events shall not include existing bushes or trees that are were preserved during the civil construction as shown in the Drawings.

32.01.03. Placement

A. Contractor shall inspect Project site and become familiar with any access requirements, access restrictions, and any other site conditions.

B. Contractor shall coordinate with Engineer to schedule inspections at the following stages:

1. Plant survivorship, vigor, and seed germination inspections.
2. Irrigation inspections
3. Supplemental container plant or plug planting.
4. Target Invasive plant inspections.
5. Target Invasive plant control events.
6. Grass and weed/non-native grass mowing events
7. Trash and debris removal.
8. Acceptance of establishment maintenance.

C. In addition to the inspections specified, Engineer may make periodic progress inspections. If Engineer determines that significant problems are present at Project site, additional maintenance inspections will be scheduled until Engineer determines that these problems are resolved.

D. If signs or indications of the “Phytophthora” disease are observed during the duration of plant establishment, the Contractor shall immediately notify the Engineer. Any equipment or personnel immediately within the apparently affected area shall be disinfected by thoroughly washing the equipment and their person in separate basins with clean water to prevent the spread of the disease. The wash water in the basins shall be collected and properly disposed of by the Contractor. The Contractor’s biologist shall be present onsite to observe and provide advice during disinfection and wash water disposal.

E. Irrigation Maintenance:

1. The Contractor shall operate irrigation system specified in Section 31 Wetland Broadcast Seeding and Planting based on the schedule in the Drawings during the first year and modify as needed to maintain good

health the following years during the 3-year maintenance period, with the goal of tapering plantings supplemental water. The quantity and frequency of watering should be minimized but should be adequate to maintain plant health. Adjust frequency of watering to account for unseasonable periods of high or low rainfall. Irrigation deficiencies shall be corrected by the Contractor within three (3) calendar days of the observed deficiency.

F. Plant Survivorship, Vigor, and Seed Germination Inspections

1. The Contractor shall be responsible for a good faith effort in maintaining the health, vigor, and survivorship of all plant materials and seeded areas, including replacing plants or reseeding, if necessary. At minimum, monthly site evaluations shall be conducted during the 3-year maintenance period. The Contractor shall observe seeded and planted areas to ensure that native herbaceous cover and plantings are in a healthy condition, and to evaluate compliance the mortality and vigor standards.

2. By the end of the 3-year maintenance period, installed plants (i.e., container plants and plugs) shall meet performance standards of at least 90% survival and 60% of living plants shall have a vigor rating of 3 or higher. Vigor standard ratings are described in Table 32.01-1.

3. By the end of the 3-year maintenance period, the target percent for seeding shall meet 30% cover of seeded species (i.e., native grasses and forbs).

4. If the performance is less than the standards indicated, remedial actions shall be taken in conformance to the drawings and these specifications, as required to achieve the identified performance standards.

TABLE 32.01-1
Vigor Standard Ratings

Rating	Description
0	Dead
1	<25% of foliage appears to be healthy (i.e., showing no signs of herbivory, nutrient or water stress, or pathogens on stems or foliage)
2	25–50% of foliage appears to be healthy
3	51–80% of foliage appears to be healthy
4	>80% of foliage appears to be healthy

G. Maintenance Logbook

1. Contractor shall record all maintenance activities and observations in a maintenance logbook, which shall include, at a minimum the following:

   a. Date when Work occurred.

b. Name of Project site and area(s) where Work occurred within Project site.

c. Materials, techniques, and equipment used.

d. Amount of time spent working in each area.

e. Type and quantity of invasive plants removed (including location of removal).

f. Type, quantity, and concentration of herbicide applied (including location of application).

g. Type and quantity of mowing performed for grass and weed/non-native grass

h. Type and quantity of plants observed and/or removed in the low-flow channel

2. Contractor shall submit the maintenance logbook to Engineer between October 1-15 each year of the three (3)-year establishment maintenance period. Engineer may also request review of maintenance logbook at any time during the three (3)-year establishment maintenance period.

H. Supplemental Plug Container Plant Installation

1. Contractor shall install supplemental plug container plants in the first two (2) years of the three (3)-year establishment maintenance period.

2. Supplemental plug container plant installation shall occur after the onset of winter rains. Prior to supplemental plant installation, Contractor shall request and receive approval from Engineer that the soil moisture is adequate.

3. Contractor shall install supplemental plug container plants between 1 November and 31 December.

4. Supplemental container plants shall be installed in the planting zone shown on Drawings and in locations as directed by the Engineer.

5. Supplemental plug container plants shall be installed per Article 31.01.04.H. Plug Container Plant Installation-General.

I. Target Invasive Plant Control Inspections

1. Contractor shall schedule invasive plant control inspections with Engineer a minimum of four (4) times each year of the three (3)-year establishment maintenance period. Inspections shall be conducted in March, May, July, and September, unless otherwise directed by Engineer.

2. Inspections shall include, at a minimum, identifying and marking invasive plants to be controlled and discussing control timing and methods.

3. Target invasive plants shall not exceed 5% cover.

J. Herbicide Use

1. Herbicide application shall not occur in hydroseed, wetland broadcast seeding, or wetland planting areas.

2. Prior to applying herbicide, Contractor shall obtain a written recommendation from a licensed Pest Control Advisor and submit for approval per Article 32.01.05. Submittals, of these Specifications.

3. Herbicide use shall comply with the Santa Clara Valley Water District's Stream Maintenance Program requirements and permit requirements per Section 18, "Permits and Regulations" and Section 19, "Environmental" of these Specifications.

4. All herbicides shall be applied by or under the immediate (on-site during application) direction of a Department of Pesticide Regulation licensed applicator. The Contractor shall employ a licensed applicator to apply herbicide in compliance with written recommendations from a State-licensed Pest Control Advisor and in accordance with all label instructions and the Santa Clara Valley Water District Pesticide Policy. A copy of this policy is included in Appendix D of these specifications.

5. Herbicides shall be applied at concentrations recommended by a licensed Pest Control Advisor for control of target species.

6. Contractor shall apply the minimum amount of herbicide to effectively control invasive species.

7. Contractor shall observe safety precautions and usage restrictions recommended by manufacturer of the herbicide. Contractor shall follow manufacturer's guidelines for herbicide application in the following situations:

   a. In aquatic settings.
   b. During rain events or if rain is expected.
   c. During windy conditions.

8. Contractor shall exercise care and ensure that herbicides do not drift to non-target vegetation or adjacent properties, or contaminate water quality of Calera Creek or other surrounding water bodies. Contractor shall be responsible for any herbicide damage to desirable vegetation outside the area designated for treatment and for settlement of any claims resulting from such damage. If herbicide or mechanical damage occurs to plants to remain within project limits or on neighboring property, a monetary

penalty shall be deducted from the Contractor's payment. The penalty shall be not less than three hundred (300) dollars per plant for any type of plant or fifty (50) dollars per inch of trunk diameter measured at four and one-half (4.5) feet above finished grade for trees, whichever is greater.

9. Herbicide shall be applied with a dye or foam marking agent to avoid skips, overlaps, or off-target application. Marking agents shall be applied per the manufacturer's recommendations.

10. Equipment for application of herbicide either as a suspension or solution in water shall be of a type that uniformly applies the herbicide at a specified rate, without danger of drift to adjacent areas. Examples include stump painting, wick applicators, wand applicators, and sprayers. Sprayer shall be low-pressure, large droplet sprayer, and herbicide shall be applied close to the target plant materials.

11. Contractor shall exercise care in draining and flushing tanks. Draining and flushing of herbicide tanks onto bare soil within Project site shall not be permitted.

12. Contractor shall dispose of herbicides safely off-site at an appropriate facility. Contractor shall not dump herbicides down drains, in water bodies, or on the ground.

13. Contractor shall keep written record of what type of herbicide is applied, application dates, and concentrations. These records shall be included in the maintenance logbook (see Item “Maintenance Logbook” above) and be made available to Engineer upon request, and can be used as a basis for evaluation compliance with these Specifications.

K. Invasive Plant Control Event

1. Timing

   a. Within ten (10) working days after each target invasive plant control inspection, Contractor shall begin a target invasive plant control event, unless otherwise approved by Engineer. Target invasive plant control event shall be completed within ten (10) working days of beginning the event.

2. Methods

   a. Each invasive plant control event shall consist of eight (8) hours of labor each for one (1) supervisor and two (2) laborers. All chemical control described in Item “Herbicide Use” above shall be performed by a qualified herbicide applicator.

b. Target invasive plants often grow in close proximity to native vegetation. Contractor shall protect adjacent native vegetation during target invasive plant control events.

c. For each event, Contractor shall control target invasive plants through manual, mechanical, and chemical control techniques throughout the planting zones, as identified during the previous invasive plant control inspection, including species listed in the following table.

TABLE 32.01-2
Invasive Species List for Lower Calera Flood Protection Project

Species	Common Name	Habitat	Life Form	Systematic Program Mitigation Ratios
Species with 1-2 years of control work (Tier 1)				
Casuarina cunninghamiana	river she-oak, beefwood	Riparian and upland	tree	1:1
Cotoneaster spp.	cotoneaster	Riparian and upland	tree	1:1
Eucalyptus spp.	eucalyptus, gum	Riparian and upland	tree	1:1
Ficus carica	Common fig	Riparian and upland	tree	1:1
Fraxinus spp.	ash	Riparian and upland	tree	1:1
Juglans spp. (J. regia, J. californica)	walnut	Riparian and upland	tree	1:1
Ligustrum spp.	privets	Riparian and upland	tree	1:1
Nicotiana glauca	tree tobacco	Upland and ruderal (levees)	tree	1:1
Olea europaea	olive	Riparian and upland	tree	1:1
Palm Spp. (Phoenix canariensis, Washingtonia robusta)	palms	Riparian and upland	tree	1:1
Populus nigra 'Italica'	Lombardy poplar	Riparian and upland	tree	1:1
Rhamnus alaternus	Italian buckthorn	Riparian and upland	tree	1:1
Salsola tragus	Russian tumbleweed	Riparian and upland	annual herbaceous	1:1
Schinus molle	Peruvian pepper tree	Riparian and upland	tree	1:1

Species	Common Name	Habitat	Life Form	Systematic Program Mitigation Ratios
Sesbania punicea	red sesbania, rattlebox	Riparian and upland	perennial herbaceous	1:1
Species with 3 or more years of control work (Tier 2)				
Acacia spp.	acacia	Riparian and upland	tree	2:1
Ailanthus altissima	tree of heaven	Riparian and upland	tree	2:1
Non-native Ambrosia spp.	ragweed	Riparian and upland	annual herbaceous	2:1
Arundo donax	giant reed	Riparian and upland	perennial grass	2:1
Broom spp.	Broom species	Riparian and upland	shrub	2:1
Centaurea spp.	Yellow starthistle, Purple starthistle	Upland and ruderal (levees)	annual herbaceous	2:1
Conium maculatum	poison hemlock	Upland and ruderal (levees)	annual/biennial	2:1
Cortaderia spp.	pampas grass, jubata grass	Upland and ruderal (levees)	perennial grass	2:1
Cynara cardunculus	artichoke thistle	Tidal and fresh water marsh and ruderal	perennial herbaceous	2:1
Delairea odoata	Cape Ivy	Riparian and upland	vine	2:1
Dittrichia graveolens	stinkweed	Upland and ruderal (levees)	annual herbaceous	2:1
Foeniculum vulgare	fennel	Riparian and upland	perennial herbaceous	2:1
Hedera spp.	English ivy, Algerian ivy	Riparian and upland	vine	2:1
Non-Native Lepidium spp.	pepperweed	Tidal and fresh water marsh and ruderal	perennial herbaceous	2:1
Myriophyllum aquaticum + spicatum	parrotfeather	Aquatic	aquatic	2:1
Phalaris aquatica	Harding grass	Riparian and upland	perennial grass	2:1

Species	Common Name	Habitat	Life Form	Systematic Program Mitigation Ratios
Phragmites australis	common reed	Tidal and fresh water marsh	perennial grass	2:1
Quercus ilex	holly oak	Riparian and upland	tree	2:1
Ricinus communis	castor bean	Upland and ruderal (levees)	annual, biennial	2:1
Robinia pseudoacacia	black locust	Riparian and upland	tree	2:1
Rubus armeniacus	himalayan blackberry	Riparian	vine	2:1
Salix babylonica (and hybrids)	weeping willow	Riparian	tree	2:1
Spartina alterniflora	atlantic cordgrass	Tidal Marsh	perennial grass	2:1
Tamarix ramosissima	salt cedar	Riparian and upland	tree	2:1
Ulmus spp.	elm	Riparian and upland	tree	2:1
Vinca major	vinca, periwinkle	Riparian and upland	perennial herbaceous	2:1

d. For perennial pepperweed, Contractor shall conduct spot herbicide treatments with a foliar herbicide application per Article 32.01.02.D. Herbicides, and Article 32.01.03.J. Herbicide Use, of these Specifications.

e. For all other species, Contractor shall refer to the California Invasive Plant Council (Cal IPC) “The Weed Workers Handbook” for recommended manual, mechanical, and chemical control techniques for invasive plants. Contractor shall request and receive written approval from Engineer prior to implementing invasive plant control methods.

f. Contractor shall request and receive approval for any control methods that deviate from those specified herein.

L. Grass and Weed/Non-Native Grass Mowing Events

1. Timing

a. Mowing shall occur before weeds and non-native grasses set seed or exceed twelve (12) inches in height, whichever occurs first.

b. Contractor shall include two (2) mowing events in the successive year of installation, two (2) mowing events in each year of the three (3)-year establishment maintenance period for a total of eight (8) events in the base bid and also provide a unit price per event.

c. Each year of the three (3)-year establishment maintenance period, Contractor shall conduct two (2) mowing events as followings: between March 1 – 31, and between June 1 – 30.

M. Low flow channel maintenance

1. Low flow channel maintenance shall be limited to the 6-foot-wide low-flow channel.

2. The need for low flow channel maintenance shall be determined by the Contractor, in coordination with and as approved by Engineer. Signs that low-flow channel maintenance is needed include, but are not limited to: the presence and/or development of dense patches of vegetation, whether native or nonnative species, within the 6-foot-wide low-flow channel.

N. Trash and Debris Removal

1. Contractor shall remove trash and debris from the Project site and dispose of it at a legally licensed disposal facility two (2) times during each year of the three (3)-year plant establishment maintenance period. Trash and debris removal shall coincide with planned invasive weed control events in spring and late summer/early fall. Specific timing shall be coordinated with Engineer.

O. Site Cleanup

1. Trash may attract sensitive wildlife species and their predators. Following the completion of each maintenance activity, Contractor shall remove all trash and construction debris from Project site.

2. Dispose of all debris legally at licensed disposal facilities. Costs incurred due to cleanup operations shall be as included for the various items of Work and no separate payment will be made thereof.

3. Remove temporary items.

P. Acceptance of Work

1. Engineer will accept Work when all improvements and corrective Work have been performed as specified and to the satisfaction of Engineer.

32.01.04. Testing

A. No testing is required.

32.01.05. Submittals

A. Contractor shall submit a logbook of maintenance activities as described in Item "Placement" above to Engineer between October 1-15 each year of the three (3)-year establishment maintenance period. Engineer may also request review of maintenance logbook at any time during the three (3)-year establishment maintenance period.

B. Contractor shall submit all materials for supplemental Plug Container Plants per Article 31.01.06. Submittals.

C. Contractor shall submit the following for all invasive plant control herbicide use prior to application:

1. Current and valid 'Operator Identification Number' issued by the County Agricultural commissioner.

2. Current and valid Qualified Applicator License (QAL) with an Aquatic Pest Control category F and Pest Control Advisor (PCA) license with a Control of Weeds category E issued by the California Department of Pesticide Regulation for all personnel involved with herbicide work.

3. A written recommendation from a California licensed Pest Control Advisor with a Control of Weeds category E license shall be submitted for each herbicide to be used prior to its application. Recommendation shall include the rate, method of application, and drift prevention techniques.

4. Material Safety Data Sheet (MSDS) for herbicides proposed for use.

5. Manufacturer's container label showing: active ingredient, percent active ingredient, recommended application rate and procedure for target species, Environmental Protection Agency registration number and precautionary statements.

32.01.06. Measurement

A. Establishment maintenance shall be measured per month.
B. Invasive plant control shall be measured per event.
C. Low-flow channel maintenance shall be measured per 100 square feet.
D. Grass and weed/non-native grass mowing shall be measured per event.

32.01.07. Payment

A. Full compensation for furnishing all labor, materials, tools, equipment and incidentals, and for performing all Work involved in planning, preparation, and execution of establishment maintenance including low flow channel maintenance,

and grass and weed/non-native grass mowing, as shown on Drawings, as specified in these specifications, and as directed by Engineer. The three (3)-year establishment maintenance period shall initiate upon acceptance of planting and include preparing the maintenance logbook, conducting invasive plant control inspections, and invasive plant control events. Engineer will confirm completion of the establishment maintenance. All costs shall be included in the lump sum price bid for ESTABLISHMENT MAINTENANCE, Bid Item No. 24, if authorized by the District.

B. Unit Prices: Contractor shall submit the following unit prices for this item. The unit prices shall be used for adding or deleting work at the sole discretion of Engineer without the necessity of remobilizing.

Unit Description	Unit	Quantity	Value	Amount
Invasive plant control event	EA	1		
Establishment Maintenance	MONTH	36		
Low-Flow Channel Maintenance	100 SF	1		
Grass and Weed/Non-Native Mowing	EA	1		

32.03. Contingency Irrigation-Supplemental Bid No. 2

32.03.01. Scope of Work

A. Contingency irrigation shall consist of all work, materials, and supplies necessary to irrigate the Hydroseeding (Article 23.08.) and Wetland Broadcast Seeding and Planting (Article 31.01.), if needed, during the three (3)-year establishment maintenance period to promote hydroseed and wetland plant establishment, growth, health, and vigor.

B. While the timing of hydroseeding and wetland broadcast seeding and planting are intended to preclude irrigation by taking advantage of natural rainfall and creek flows, implementation timing is subject to change and drought-conditions would reduce the rainfall and flows being depended upon. Contingency Irrigation is intended to promote hydroseed and wetland plant establishment, growth, health, and vigor, if such schedule changes, drought-conditions, and/or other unforeseen circumstances occur, but also to be as infrequent as possible.

C. Contingency irrigation shall be per irrigation event; written approval from Engineer is required prior to an irrigation event. Any irrigation event conducted prior to approval from Engineer will be done at Contractor’s risk with no guarantee of compensation.

32.03.02. Materials

A. If needed, the hydroseed area and/or the wetland broadcast seeding and planting area shall be watered by hand using a hose connected to a water truck, or other means as determined and proposed by the Contractor.

B. Water supply for Contingency Irrigation shall be per Article 23.05.01.02. Materials.

32.03.03. Placement

A. The need for contingency irrigation to guard against a water-deficit and promote hydroseed and wetland plant establishment, growth, health, and vigor shall be determined by Contractor, in coordination with and as approved by Engineer. Signs of water deficit include defoliation, leaf or trunk sunburn, leaf or stem wilt, twig or branch dieback, or stunted growth.

B. The need for contingency irrigation for wetland plant establishment may also be based on a planting schedule that precludes the benefits of natural rainfall or creek flow events for plant water supply or prolonged dry period. Contingency Irrigation should mimic, extend, and augment natural rainfall patterns for the region, and provisionally include two watering events between April and June (if rainfall in the preceding months is less or shorter than normal), one watering event between June and September, and two watering events between September and November (if winter rainfall is late), for a total of five (5) Contingency Irrigation events in each year of the 3-year establishment period for a total of fifteen (15) events. This schedule will be modified based on Contractor's submitted and approved Contingency Irrigation approval requests.

C. In hydroseeded areas, Contractor shall apply ½-inch of water to all proposed and approved hydroseed areas. Contingency irrigation events for hydroseed shall provisionally include five (5) irrigation events in the first year of establishment between November and March.

D. In wetland broadcast seeding and planting areas, Contractor shall wet the soil to the entire, reasonably-presumed depth of the root mass of the plants at that time.

E. The Contractor assumes all responsibility for any damage caused within hydroseed or wetland broadcast seeding and planting areas as a result of Contingency Irrigation.

32.03.04. Testing

A. No special requirements.

32.03.05. Submittals

A. If signs of water deficit are observed, particularly in combination with a prolonged dry period or less-than-ideal planting schedule, Contractor shall submit a

Contingency Irrigation approval request to Engineer. The request shall specify the justification for Contingency Irrigation, the proposed schedule, type of equipment to be used, and water source. Requests shall be submitted no less than seven (7) days before the requested Contingency Irrigation event.

B. Contractor shall submit a record of all irrigation events, schedule, and volume of water applied in the maintenance logbooks specified in Article 32.01. Establishment Maintenance.

32.03.06. Measurement

A. Contingency Irrigation shall be measured per 100 gallons acceptably completed.

32.03.07. Payment

A. Full compensation for furnishing all labor, materials, tools, equipment and incidentals and for doing all work required for fifteen (15) irrigation events for wetland planting and five (5) irrigation events for hydroseed areas. Contingency Irrigation shall be considered as included in the unit price bid per each irrigation event for CONTINGENCY IRRIGATION, Supplemental Bid Item No. 2, if authorized by the District.

B. Unit Prices: Contractor shall submit the following unit prices for this item. The unit prices shall be used for adding or deleting work at the sole discretion of Engineer.

Unit Description	Unit	Quantity	Value	Amount
Hydroseed area irrigation	100 gallons	1		
Wetland broadcast seeding and planting area irrigation	100 gallons	1		

APPENDIX A

Agreement
Payment Bond
Performance Bond
Instructions for Completing SBE Utilization Report
Sample Small/Micro Business Enterprises (SBE) Utilization Report
Escrow Agreement for Security Deposits in Lieu of Retention

THIS PAGE INTENTIONALLY LEFT BLANK

The following is an agreement entered into as of _____ by and between the SANTA CLARA VALLEY WATER DISTRICT, State of California, hereinafter referred to as "District" and _____, hereinafter referred to as "Contractor."

For the considerations hereinafter specified, Contractor and District agree as follows:

ARTICLE I: Work to Be Done and Documents Forming the Contract

Contractor agrees to do all the work and furnish all materials necessary to construct and complete, in accordance with the Specifications the following work:

[Project Name]

[Project Number, Contract Number]

Said work shall be performed to the satisfaction of the Engineer all in accordance with the Drawings, Specifications, Notice to Bidders, and the Proposal of the Contractor, all of which documents are hereby specially referred to and by such reference made a part of this Contract.

ARTICLE II: Contract Price

District hereby agrees and promises to pay to Contractor the sum of _____ Dollars ($_____).

For the performance of said work; provided, however, that the above mentioned sum is one determined by the Proposal of Contractor as based upon the estimated amount of work to be done, and should there be any variance between the estimated amount of work to be done and the actual amount of work performed, then the final payment price shall be computed on the basis of the unit prices contained in the Proposal of Contractor.

ARTICLE III: Completion of Contract

It is hereby agreed that the work called for under this Contract, in all its parts and requirements, shall be completed before the expiration of _____ calendar days from the First Chargeable Day of the Contract as stated on the Notice to Begin Work unless the time for completion is extended, as allowed by the Specifications.

ARTICLE IV: Bonds Required

This Contract shall have no force or effect whatsoever unless and until Contractor delivers to District a Payment Bond in the sum of _____ Dollars ($_____).

Nor shall such Contract be effective until Contractor also gives a good and sufficient bond in the sum of _____ Dollars ($_____) for the faithful performance of the work to be done under the terms of this Contract.

ARTICLE V: Certification by Contractor

Contractor hereby certifies as follows:

> "I certify that I am aware of the provisions of Section 3700 of the Labor Code which requires every employer to be insured against liability for workers' compensation or to undertake self insurance in accordance with the provisions of that Code, and I will comply with such provisions before commencing the performance of the work of this Contract."

ARTICLE VI: Gift Policy Observance

Contractor hereby acknowledges that District policy prohibits the acceptance by District personnel of gifts of any kind from vendors or contractors. Contractor shall honor this policy by not sending or bringing gifts to the District.

IN WITNESS WHEREOF, Contractor and District have caused this Agreement to be subscribed as of the day and year first hereinabove written.

Date Contractor signature affixed:

_____

By _____

Title _____

_____
Federal I.D.

"Contractor"

SANTA CLARA VALLEY WATER DISTRICT

Date District signature affixed:

By _____
Chair/Board of Directors

_____

Payment Bond

BE IT KNOWN BY THESE PRESENTS: That

WHEREAS, the Santa Clara Valley Water District (hereinafter called "the Public Entity"), and _____ (hereinafter designated as "Principal") have entered into an agreement for the furnishing of [Project Name] which said agreement is dated as of _____, 20_____; and

WHEREAS, said Principal is required by Chapter 5 (commencing at Section 3225) and Chapter 7 (commencing at Section 3247), Title 15, Part 4, Division 3 of the California Civil Code to furnish a bond in connection with said agreement;

NOW, THEREFORE, we, the Principal and _____ as Surety, are held and firmly bound unto the Public Entity in the penal sum of _____ Dollars ($_____) lawful money of the United States of America for the payment of which sum well and truly to be made, we bind ourselves, our heirs, executors, Administrators, and successors and assigns, jointly and severally, firmly by these presents.

THE CONDITION OF THIS OBLIGATION IS SUCH that if the Principal or the Principal's subcontractor fails to pay any of the persons named in Section 3181, or amounts due under the California Unemployment Insurance Code with respect to work or labor performed under the agreement, or for any amounts required to be deducted, withheld, and paid over to the Employment Development Department from the wages of employees of the Principal and the Principal's subcontractors pursuant to Section 13020 of the Unemployment Insurance Code, with respect to such work and labor, that the Surety or Sureties will pay for the same, in an amount not exceeding the sum hereinabove specified, and also, in case suit is brought upon the bond, a reasonable attorney's fee, to be fixed by the court. The Principal may require of the Principal's subcontractors a bond to indemnify the Principal for any loss sustained by the Principal because of any default by the Principal's subcontractors under Section 3248 of the California Civil Code.

This bond shall inure to the benefit of any of the persons named in Section 3181 of the California Civil Code, so as to give a right of action to such persons or their assigns in any suit brought upon this bond.

Should the condition of this bond be fully performed, then this obligation shall become null and void; otherwise, it shall be and remain in full force and effect.

IN WITNESS WHEREOF two identical counterparts of this instrument, each of which shall for all purposes be deemed an original thereof, have been duly executed by the Principal and Surety or Sureties above named on the _____ day of _____, 20_____.

PRINCIPAL:	**SURETY**:
_____	_____
Signature	Signature
_____	_____
Name	Name (Seal)
_____	_____
Title	Title
_____	_____
Address	Address

NOTE: Signatures of those executing for the Surety or Sureties must be properly acknowledged.

BE IT KNOWN BY THESE PRESENTS: That

WHEREAS, the Santa Clara Valley Water District, State of California, has awarded to _____ _____ (hereinafter designated as "Principal") a Contract for [Project Name], and

WHEREAS, said Principal is required under the terms of said Contract to furnish a bond for the faithful performance of said Contract,

NOW, THEREFORE, we, the Principal and _____ as Surety, are held and firmly bound unto the Santa Clara Valley Water District (hereinafter called "District") in the sum of _____ Dollars ($_____) lawful money of the United States, for the payment of which sum well and truly to be made, we bind ourselves, our heirs, executors, administrators and successors, jointly and severally, firmly by these presents.

THE CONDITION OF THIS OBLIGATION IS SUCH that if the above bounden Principal, or heirs, executors, administrators, successors, or assigns shall in all things stand to and abide by, and well and truly keep and perform the covenants, conditions and agreements in the said Contract and any alteration thereof made as therein provided, to be kept and performed at the time and in the manner therein specified, and in all respects according to their true intent and meaning, and shall indemnify and save harmless District, its officers, agents, and employees, as therein stipulated, then this obligation shall become null and void; otherwise it shall be and remain in full force and effect.

And the said Surety, for value received hereby stipulates and agrees that no change, extension of time, alteration, or addition to the terms of the Contract or to the work to be performed thereunder or the Specifications accompanying the same shall in any wise affect its obligation on this bond, and does hereby waive notice of any such change, extension of time, alteration, or addition to the terms of the Contract or to the work or to the Specifications.

In the event suit is brought upon this bond by District and judgment is recovered, Surety shall pay all costs incurred by District in such suit, including a reasonable attorney's fee to be fixed by the Court.

IN WITNESS WHEREOF two identical counterparts of this instrument, each of which shall for all purposes be deemed an original thereof, have been duly executed by Principal and Surety above named, on the _____ day of _____, 20_____.

PRINCIPAL:	**SURETY**:
_____	_____
Signature	Signature
_____	_____
Name	Name (Seal)
_____	_____
Title	Title
_____	_____
Address	Address

NOTE: Signature of those executing for Surety must be properly acknowledged.

Instructions for Completing SBE Utilization Report

Download Excel form from District's website:
www.valleywater.org/Programs/Construction.aspx

This form is **due as noted below** with the **Progress Pay Application**.

1. **If the Prime Contractor is a Small Business Enterprise (SBE) Company—**
   Submit SBE Utilization Report with the First and Last Progress Pay Estimate
2. **If the Prime Contractor is not a SBE but SBE subcontractors will be working on the project—**
   Submit SBE Utilization Report monthly with each Progress Pay Application
3. **If the Prime Contractor is not a SBE and will have no SBE subcontractors working on the project—**
   No need to submit the SBE information at all

If Applicable (in Category 1 or 2 above)—The final SBE Utilization Report is due prior to final payment.

Instructions for completing the SBE Utilization Report

Page 1 Instructions:

a. This is the total amount of money paid to date by SCVWD for work completed on this Contract including retention.

b. This is the CURRENT Total Contract amount, including all executed change orders.

c. a ÷ b = c (Formula is built-in for line c of page 1)

d. Total of Column I from page 2 of SBE Utilization Report (Total is linked for line d of page 1)

e. Total of Column V from page 2 of SBE Utilization Report (Total is linked for line e of page 1)

f. e ÷ a = f (Formula is built-in for line f of page 1)

g. e ÷ d = g (Formula is built-in for line g of page 1)

Page 2 Instructions:

Column I. List $ amount of SBE participation to each Subcontractor or Supplier listed on Bid Form #4 of Bid Proposal. The total of this column is linked to line d of page 1.

Column II. List ***Adjusted*** $ amount of SBE participation to each Subcontrator or Supplier listed on Bid form #4 of Bid Proposal.

Column III. List Materials/Supplies/Trucking amount paid to each SBE.

Column IV. List Subcontractor amount paid to each SBE.

Column V. Column III plus Column IV. The total of this column is linked to line e of page 1.

Santa Clara Valley Water District

CONTRACT DOCUMENTS

SMALL/MICRO BUSINESS ENTERPRISES (SBE) UTILIZATION REPORT

Page 1 of 2

☐ MONTHLY ☐ FINAL

CONTRACT NO.:	ORIGINAL BID AMOUNT:	FIRM (PRIME):
CONTRACT TITLE:		ADDRESS:
REPORT PERIOD:		CITY, STATE & ZIP CODE
a. Amount of Contract Completed (Including Retention Amount)..... $		PHONE NO.:
b. TOTAL Amount of Contract (Including all change orders)..... $		
c. % of Contract Completed..... %		NAME & TITLE OF PERSON COMPLETING THIS FORM (PLEASE PRINT OR TYPE):
d. SBE Participation Amount (Column I of page 2)..... $		
e. SBE Work Paid to Date (Column V of page 2)..... $		
f. SBE % of Contract Completed..... %		SIGNATURE: / FORM COMPLETION DATE:
g. % of SBE Participation Completed..... %		
Advertised Contract Goal: $		**THIS FORM IS NOT TO BE ALTERED IN ANY WAY. ALTERED FORMS WILL BE REJECTED AS NONCOMPLIANT.** ***SBE must be certified or accepted as certified by Department of General Services.**

When Contract progress is 50% or more complete, and if SBE participation % complete (h) is less than the total % of Contract completion, Contractor must submit a report to SCVWD on how it will achieve SBE participation % by completion of Contract.*

(Rev. 01/16/15)
WP File Name

PROJECT NAME

Santa Clara Valley Water District

CONTRACT DOCUMENTS

SMALL/MICRO BUSINESS ENTERPRISES (SBE) UTILIZATION REPORT

Page 2 of 2

			MATERIALS/SUPPLIES/TRUCKING			SUBCONTRACTORS				
List ALL SBE* PARTICIPATION SUBCONTRACTORS/ SUPPLIERS/TRUCKERS (From Bid Form #4—Bid Proposal)	AMOUNT OF SUBCONTRACT OR PURCHASE (From Bid Form #4—Bid Proposal) (I)	ADJUSTED AMOUNT OF SUBCONTRACT OR PURCHASE (After Initial Bid Proposal) (II)	PAID PREVIOUSLY	PAID THIS PERIOD	PAID TO DATE (III)	PAID PREVIOUSLY	PAID THIS PERIOD	PAID TO DATE (IV)	TOTAL PAID TO DATE (V)	ITEM NUMBER(S) OR GENERAL DESCRIPTION OF WORK PERFORMED THIS PERIOD (Electrical, landscape, engineering, survey, etc.)
ABC Co.										
TOTAL	$								$	

THIS FORM IS NOT TO BE ALTERED IN ANY WAY.
ALTERED FORMS WILL BE REJECTED AS NONCOMPLIANT.
***SBE must be certified or accepted as certified by Department of General Services.**

(Rev. 01/16/15)
WP File Name

PROJECT NAME

Download Excel form from District's website:
www.valleywater.org/Programs/Construction.aspx

Escrow Account No.: _____

This Escrow Agreement is made and entered into by and between:

SANTA CLARA VALLEY WATER DISTRICT whose address is 5750 Almaden Expressway, San Jose, CA 95118 hereinafter called "**Owner**," and

_____ whose address is _____ hereinafter called "**Contractor**," and

_____ whose address is _____ hereinafter called "**Escrow Agent**," and

For the consideration hereinafter set forth, the Owner, Contractor, and Escrow Agent agree as follows:

1. Pursuant to §22300 of the Public Contract Code of the State of California, Contractor has the option to deposit securities with Escrow Agent as a substitute for retention earnings required to be withheld by Owner pursuant to the Construction Contract entered into between the Owner and Contractor for [Project Name] in the amount of $_____ dated _____ (hereinafter referred to as the "Contract"). Alternatively, on written request of the Contractor, the Owner shall make payments of the retention earnings directly to the Escrow Agent. When the Contractor deposits the securities as a substitute for Contract earnings, the Escrow Agent shall notify the Owner within 10 days of the deposit. The market value of the securities at the time of the substitution shall be at least equal to the cash amount then required to be withheld as retention under the terms of the Contract between the Owner and Contractor. Securities shall be held in the name of **Santa Clara Valley Water District**, and shall designate the Contractor as the beneficial owner.

2. The Owner shall make progress payments to the Contractor for those funds which otherwise would be withheld from progress payments pursuant to the Contract provisions, provided that the Escrow Agent holds securities in the form and amount specified above.

3. When the Owner makes payment of retentions earned directly to the Escrow Agent, the Escrow Agent shall hold them for the benefit of the Contractor until the time that the escrow created under this contract is terminated. The Contractor may direct the investment of the payments into securities. All terms and conditions of this agreement and the rights and responsibilities of the parties shall be equally applicable and binding when the Owner pays the Escrow Agent directly.

4. Contractor shall be responsible for paying all fees for the expenses incurred by Escrow Agent in administering the Escrow Account and all expenses of the Owner. These expenses and payment terms shall be determined by the Owner, Contractor, and Escrow Agent.

5. The interest earned on the securities or the money market accounts held in escrow and all interest earned on that interest shall be for the sole account of Contractor and shall be subject to withdrawal by Contractor at any time and from time to time without notice to the Owner.

6. Contractor shall have the right to withdraw all or any part of the principal in the Escrow Account only by written notice to Escrow Agent accompanied by written authorization from the Owner to the Escrow Agent that Owner consents to the withdrawal of the amount sought to be withdrawn by Contractor.

7. The Owner shall have a right to draw upon the securities in the event of default by the Contractor. Upon seven days' written notice to the Escrow Agent from the owner of the default, the Escrow Agent shall immediately convert the securities to cash and shall distribute the cash as instructed by the Owner.

8. Upon receipt of written notification from the Owner certifying that the Contract is final and complete, and that the Contractor has complied with all requirements and procedures applicable to the Contract, Escrow Agent shall release to Contractor all securities and interest on deposit less escrow fees and charges of the Escrow Account. The escrow shall be closed immediately upon disbursement of all moneys and securities on deposit and payments of fees and charges.

9. Escrow Agent shall rely on the written notifications from the Owner and the Contractor pursuant to Sections (5) to (8), inclusive, of this Agreement and the Owner and Contractor shall hold Escrow Agent harmless from Escrow Agent's release and disbursement of the securities and interest as set forth above.

10. The names of the persons who are authorized to give written notice or to receive written notice on behalf of the Owner and on behalf of Contractor in connection with the foregoing, and exemplars of their respective signatures are as follows:

11. Throughout the term of this Escrow Agreement, the Escrow Agent herein agrees to provide monthly statements indicating the account balances and status of the account, directly to the Owner, the Santa Clara Valley Water District, at the address provided below, to the attention of the District's representative identified below. The Escrow Agent may submit a request to provide such statements in electronic format.

12. The Escrow Agent must provide written notice to the Owner in advance of any action that will negatively impact the account.

On behalf of Owner:

Signature Date

Name
Capital Program Deputy Operating Officer
Designated Engineer

Title

5750 Almaden Expressway
San Jose, CA 95118

Address

On behalf of Contractor:

Signature Date

Name

Title

Address

On behalf of Escrow Agent:

Signature Date

Name

Title

Address

At the time the Escrow Account is opened, the Owner and Contractor shall deliver to the Escrow Agent a fully executed counterpart of this Agreement.

IN WITNESS WHEREOF, the parties have executed this Agreement by their proper officers on the date first set forth above.

OWNER:

Signature Date

Name
Capital Program Deputy Operating Officer
Designated Engineer

Title

5750 Almaden Expressway
San Jose, CA 95118

Address

CONTRACTOR:

Signature Date

Name

Title

Address

THIS PAGE INTENTIONALLY LEFT BLANK

APPENDIX B

Environmental

Minimum Qualifications of the Contractor Biologist

Minimum Qualifications of the Contractor Biologist

A Contractor Biologist is an individual hired by a Contractor to the District to carry out the biological provisions of a District project. The Contractor Biologist shall oversee projects, develop and follow biological survey protocols, perform biological field surveys, and shall meet the minimum qualifications outlined in these guidelines.

Qualified Contractor Biologist: The qualified Contractor biologist must possess educational and/or professional training in ornithology, habitat assessment and principles of wildlife management or conservation biology. The qualified Contractor Biologist must be familiar with the species of birds and bird resources or other applicable resources (e.g., amphibians and reptiles) likely to be encountered on this project. The qualified Contractor Biologist must have sufficient background experience to implement protocols, collect and organize biological data, and be capable of making appropriate decisions in the field. A qualified Contractor Biologist is a professional biologist in any of the categories below who meet the following minimum qualifications:

Basic Experience Requirements:

- Biologist specializing or trained in wildlife resources
- Biologist with a minimum of five (5) years academic training and professional experience in biological studies and related resource management activities
- Biologist with a minimum of two (2) years conducting surveys for each species that may be present in the project area

Basic Knowledge Requirements:

- Basic principles and practices of ecology, biology, botany, wetlands science, wildlife management and related natural resources management.
- Pertinent federal, state, and local codes, laws and regulations.
- Principles of business letter writing and basic report preparation

Basic Ability Requirements:

- Perform scientific research, analysis, and reporting.
- Sufficient knowledge to analyze and evaluate complex biological data and technical reports in order to make recommendations based on results and findings.
- Read and interpret maps, plans, specifications, and contract documents.
- Possess specific quantitative techniques to evaluate resource functions and values.
- Use computer programs and their biological resource applications.
- Possess monitoring techniques and data evaluation skills in order to develop and implement mitigations and monitoring programs.
- Interpret and explain applicable environmental laws and regulations.
- Prepare clear and concise reports.
- Understand and carry out oral and written instructions.
- Maintain accurate notes and records.

- Communicate clearly and concisely, both verbally and in writing.
- Establish and maintain effective working relationships with those contacted in the course of the work.

Experience and Training Guidelines:

A combination of experience and training considered by the District as to likely provide the required knowledge and abilities for the project will be deemed as qualifying. An example of a typical way to obtain the knowledge and abilities would be:

Experience: Two years of experience performing biological, ecological, or other related scientific research

Training: Equivalent to a Bachelors degree from an accredited college or university with major course work in biological or natural sciences, ecology, or a related field.

Directly related experience may be substituted for the college requirements on the basis of one and one-half (1.5) years of experience for one year of education, to a maximum of four years.

THIS PAGE INTENTIONALLY LEFT BLANK

APPENDIX C

Permits and Licenses

1. Fish and Game Code Section 1602 Streambed Alteration Agreement 1600-2013-0159-R3 (California Department of Fish and Wildlife)
2. Amendment 1 of Lake or Streambed Alteration Agreement 1600-2013-0159-R3 (California Department of Fish and Wildlife)
3. Amendment 2 of Lake or Streambed Alteration Agreement 1600-2013-0159-R3 (California Department of Fish and Wildlife)
4. Amendment 3 of Lake or Streambed Alteration Agreement 1600-2013-0159-R3 (California Department of Fish and Wildlife)
5. Amendment 4 of Lake or Streambed Alteration Agreement 1600-2013-0159-R3 (California Department of Fish and Wildlife)
6. Extension of Lake or Streambed Alteration Agreement 1600-2013-0159-R3 (California Department of Fish and Wildlife)
7. Migratory Bird Permit Memorandum (MBPM) dated April 15, 2003 (United States Fish and Wildlife Service (USFWS))
8. Amended Conditional Water Quality Certification, CIWQS Place No. 768945 (MB), and CIWQS Regulatory Measure No. 397588 (San Francisco Bay Region Water Quality Control Board)
9. Second Amended Conditional Water Quality Certification, CIWQS Place No. 768945 (SG), and CIWQS Regulatory Measure No. 397588 (San Francisco Bay Region Water Quality Control Board)
10. Dewatering Plan - Construction within Lower Berryessa Creek Channel
11. CWA Section 404 Permit 2003-28440S (U.S. Army Corps of Engineers)
12. CWA Section 404 Permit 2003-28440S Time Extension (U.S. Army Corps of Engineers)
13. BART Example Site Specific Work Plan (SSWP)
14. VTA Construction Access Permit (CAP) #4 Application
15. Draft VTA Construction Access Permit #4 (CAP)
16. City of Milpitas Encroachment Permit Application

THIS PAGE INTENTIONALLY LEFT BLANK

State of California – The Natural Resources Agency
DEPARTMENT OF FISH AND WILDLIFE
Bay Delta Region
7329 Silverado Trail
Napa, CA 94558
(707) 944-5500
www.wildlife.ca.gov

EDMUND G. BROWN JR., Governor
CHARLTON H. BONHAM, Director

May 28, 2014

Melanie Richardson
Santa Clara Valley Water District
5750 Almaden Expressway
San Jose, CA 95118

Subject: Final Lake or Streambed Alteration Agreement
Notification No. 1600-2013-0159-R3
Lower Berryessa and Lower Calera Creek Flood Protection Improvements Project

Dear Ms. Richardson:

Enclosed is the final Streambed Alteration Agreement ("Agreement") for the Lower Berryessa and Lower Calera Creek Flood Protection Improvements Project ("Project"). Before the Department may issue an Agreement, it must comply with the California Environmental Quality Act ("CEQA"). In this case, the Department, acting as a responsible agency, filed a notice of determination ("NOD") on May 28, 2014 based on information contained in the Environmental Impact Report the lead agency prepared for the Project.

Under CEQA, filing a NOD starts a 30-day period within which a party may challenge the filing agency's approval of the project. You may begin your project before the 30-day period expires if you have obtained all necessary local, state, and federal permits or other authorizations. However, if you elect to do so, it will be at your own risk.

If you have any questions regarding this matter, please contact Tami Schane, Environmental Scientist, at (415) 831-4640 or tami.schane@wildlife.ca.gov.

Sincerely,

Craig J. Weightman
Environmental Program Manager
Bay Delta Region

cc: David Dunlap – ddunlap@valleywater.org
Warden Rodriguez

Conserving California's Wildlife Since 1870

CALIFORNIA DEPARTMENT OF FISH AND WILDLIFE
BAY DELTA REGION
7329 SILVERADO TRAIL
NAPA, CA 94558

STREAMBED ALTERATION AGREEMENT
NOTIFICATION NO. 1600-2013-0159-R3
LOWER BERRYESSA CREEK, LOWER CALERA CREEK, LOWER PENITENCIA CREEK, AND TULARCITOS CREEK

MS. MELANIE RICHARDSON
Lower Berryessa and Lower Calera Creek Flood Protection Improvements Project

This Revised Streambed Alteration Agreement (Agreement) is entered into between the California Department of Fish and Wildlife (CDFW) and the Santa Clara Valley Water District (Permittee), as represented by Melanie Richardson.

RECITALS

WHEREAS, pursuant to Fish and Game Code (FGC) section 1602, Permittee notified CDFW on May 1, 2013 that Permittee intends to complete the project described herein.

WHEREAS, pursuant to FGC section 1603, CDFW has determined that the project could substantially adversely affect existing fish or wildlife resources and has included measures in the Agreement necessary to protect those resources.

WHEREAS, Permittee has reviewed the Agreement and accepts its terms and conditions, including the measures to protect fish and wildlife resources.

NOW THEREFORE, Permittee agrees to complete the project in accordance with the Agreement.

PROJECT LOCATION

The project is located within a developed portion of Milpitas, in the County of Santa Clara, State of California. The area is generally bounded by Calaveras Boulevard to the south, Interstate 880 to the west, Dixon Landing Road to the north, and within 1,000 feet of Interstate 680 to the east. The project site can be accessed from Interstate 880 by taking the Calaveras Boulevard exit toward McCarthy Boulevard, turning onto East Calaveras Boulevard and continuing until encountering the southern reach (Reach G) of Lower Berryessa Creek. The coordinates are Latitude 37.4383338N, Longitude 121.905098W. The project area is shown in Exhibit A.

PROJECT DESCRIPTION

The purpose of the project is to provide 100-year flood protection for the Lower Berryessa Creek watershed by modifying the existing flood protection structures, as well

as by improving the existing maintenance access roads for the flood control channels. Project elements include raising creek levees, constructing floodwalls along existing creek levees, widening channel cross-sections, improving maintenance access while reducing the number of maintenance roads, and providing three in-channel low earthen benches for the establishment of riparian habitat. The majority of project construction will be in Lower Berryessa Creek and Lower Calera Creek, with transitional structures being constructed in short segments of Tularcitos Creek and Lower Penitencia Creek.

Lower Berryessa Creek

Work within Lower Berryessa Creek will extend upstream from its confluence with Lower Penitencia Creek (the western end of Reach A) to the downstream face of the bridge crossing at Calaveras Boulevard (the southeastern end of Reach G). Extent of work that will be constructed within the Lower Berryessa Creek portion, including a 30-foot section of Lower Penitencia Creek and a 75-foot section of Tularcitos Creek, is shown in Exhibit B. The Lower Berryessa Creek portion of the project extends approximately 8,820 feet.

Levees and floodwalls. Levees along the northeastern side (right bank, facing downstream) of the channel will be raised for the entire length of Lower Berryessa Creek, with the exception of Reach C, where levees on both sides were replaced in 2010 with floodwalls as part of the Santa Clara Valley Transportation Authority channel realignment and culvert construction project. Reconstructed levees will be up to 12 feet higher than the adjacent outside elevation. A short segment of levee slope near Abel Street will include boulders that are buried or keyed into the bank to provide additional bank stability.

Floodwalls varying in height from 6 feet to 9 feet above the adjacent elevation will be constructed along the southwestern side (left bank, facing downstream) of the channel for the entire length of Lower Berryessa Creek. Although the channel width as measured between the tops of the banks will remain the same, reconfiguring the channel through levee construction and/or replacement with floodwalls will increase the channels capacity by increasing the width at the channel bottom. Along Lower Berryessa Creek at the Hetch-Hetchy right-of-way, floodwalls will be constructed at the top of the existing concrete levee.

Modifications to levees and floodwalls within approximately 30 feet of Lower Penitencia Creek at its confluence with Lower Berryessa Creek will occur, including raising the east bank levee and the existing guide vane along Lower Penitencia Creek such that the transition between Lower Penitencia Creek and the proposed modified flood protection improvements along Lower Berryessa Creek is improved. Similar modifications will be made to levees and floodwalls within approximately 75 feet of Tularcitos Creek at its confluence with Lower Berryessa Creek.

Low earthen benches. Three low earthen benches ranging in width from 30 to 34 feet on the east bank within the widened channel will be created and planted or seeded with native herbaceous and woody species to create riparian habitat.

Maintenance roads. To improve access for ongoing maintenance, the existing maintenance roads will be modified to accommodate one 18-foot wide low access road along the inside of the new floodwall and one access road on top of the reconstructed levee. The lower maintenance road will be improved to include a total of four 30-foot wide by 70-foot turnouts, spaced approximately every 2,000 feet over the length of the channel. The lower maintenance road will ramp up for access from San Andreas Drive, Abel Street, North Milpitas Boulevard, North Hillview Drive, and the pedestrian bridge across from Peter T. Gill Park.

Bridge improvements. To match the new maintenance road elevation at the top of the reconstructed levee, the existing maintenance road bridge near the confluence of Lower Berryessa Creek and Lower Calera Creek will be raised by replacing the existing bridge abutments. Construction of this element will also include raising the pedestrian bridge across from Peter T. Gill Park, and a new concrete headwall along the upstream face of the North Milpitas Boulevard Bridge.

Lower Calera Creek

Work within Lower Calera Creek will extend approximately 3,100 feet from the concrete drop structure behind Milpitas High School at the upstream end, to its confluence with Lower Berryessa Creek at the downstream end. The affected creek length is divided into Reaches A and B. Reach A extends 800 feet from the Lower Berryessa confluence to the North Milpitas Avenue Bridge. Reach B extends about 2,300 feet from the North Milpitas Avenue Bridge to the upstream project terminus. Extent of work that will be constructed in Lower Calera Creek is shown in Exhibit C.

Reach A. Reach A contains a 300-foot long concrete-lined channel under the Union Pacific Railroad (UPRR) and Valley Transportation Authority (VTA) light rail bridges and a 470-ft long open concrete U-frame channel extending to the North Milpitas Avenue Bridge. Within Reach A, concrete headwalls on the existing UPRR and VTA bridges will be installed. A vertical concrete floodwall will be constructed on the north side of the existing U-frame. On the south side of the U-frame, an 18-foot wide maintenance road and a vertical concrete floodwall south of the maintenance road will be constructed. The maintenance road will be surfaced with compacted aggregate.

Reach B. In Reach B, the existing creek channel is an earthen trapezoidal channel with maintenance roads on both sides of the trapezoidal channel. The existing earthen levee on the north bank will be demolished and the channel widened by about 25 ft. A new earthen levee with 2:1 side-slopes topped by a vertical concrete floodwall will be built to replace the removed levee. A 5-foot wide maintenance trail

will be constructed and surfaced with compacted aggregate on the levee crest on the channel side of the floodwall. On the south bank, the existing levee will be improved by constructing a vertical concrete flood wall on the south bank and an 18-foot wide maintenance road on the channel side of the floodwall. The maintenance road will be surfaced with concrete aggregate. New concrete headwalls will be installed on the existing North Milpitas Boulevard and Arizona Avenue Bridges. The channel bed will increase in width and the channel bottom on either side of the low flow channel will be planted with wetland species.

Construction Activity Details

Levees. Construction of the new raised levees will entail at least partial excavation of the existing levees, as well as preparation of the levees to receive new fill. Where no new floodwalls are planned, the existing levee material will be removed down to grade level. Where floodwalls will be installed and levees retained, the excavation of the existing levees will accommodate the floodwall footings and supports below existing grade. Where floodwalls will replace levees entirely, the entire levee will be excavated. Reconstructed levee slopes will be contoured to a 2:1 slope and hydroseeded with native grasses.

Floodwalls. Floodwalls and support footings will be constructed of reinforced concrete. Steel rebar will be used to construct the floodwall forms and concrete will be poured into the forms. Once the concrete has set, the forms will be removed and disposed.

Maintenance roads. There will be a reduction in the number of maintenance roads from 4 to 2 within most channel reaches. The lower maintenance road (located within the Lower Berryessa Creek channel) will be surfaced with cellular concrete mats. The upper maintenance roads in both Lower Berryessa and Lower Calera Creeks will be surfaced with compacted aggregate.

Hidden Lakes pump station. The Hidden Lakes pump station, owned and operated by the City of Milpitas, is located upstream of Abel Street and consists of four existing outfall pipes (three 30-inch diameter and one 12-inch diameter) that discharge water from the pump station into Lower Berryessa Creek. These pipes currently discharge water perpendicular to the creek channel. To accommodate the change in levee orientation that will occur as a result in increasing the levee height, the existing corrugated metal outfall pipes will be extended with longer-lasting concrete pipes. These pipes will also be reconfigured such that discharges will be oriented at an angle facing downstream. Existing sacked concrete will be replaced with an equal area of grouted riprap at the outfall, and existing riprap at the opposite bank along the discharge pool will be permanently removed.

Riprap. Rock riprap will be placed at seven locations in the project area:

1) Guide vane at confluence of Lower Berryessa and Lower Penitencia Creeks (west

bank of Lower Berryessa Creek)
Station 1+20 to 3+80
260 linear feet (LF)

2) East bank of Lower Berryessa Creek at confluence with Lower Calera Creek
Station 9+30 to 11+90
260 LF

3) Upstream edge of new floodwall on Lower Berryessa Creek east bank
Station 29+00 to 30+25
150 LF (curved bank is longer than creek stations)

4) Hidden Lakes pump station outfall (east bank of Lower Berryessa Creek)
Station 40+40 to 40+80
40LF

5) 4,033 LF line of riprap partially buried in channel bed at boundaries of riparian benches (line is 1 rock wide) at 3 locations.
Station 38+00 to 53+83, 1,583 LF
Station 59+04 to 70+04, 2,000 LF
Station 81+00 to 85+50, 450 LF

Staging and access. Staging and storage of materials and equipment will be located outside of CDFW's 1600 jurisdiction, as well as outside of other sensitive habitats, including Waters of the U.S. and Waters of the State. Staging area B (south side of Abel Street) consists of compacted soil with minimal ruderal vegetation. Staging areas C and D (Hanson Court at end of cul-de-sac and Arizona Avenue near north bank of Calera Creek, respectively) are developed and paved. Worker access will be provided via the existing levee maintenance roads and two 15-foot wide, approximately 8,500-foot long, temporary access roads along both sides of the Lower Berryessa Creek channel. Two 15-foot wide, approximately 3,100-foot long, temporary access roads will be used along both sides of Lower Calera Creek.

Dewatering. Dewatering in the non-tidally-influenced reaches (Reaches C through G of Lower Berryessa Creek and Reach B of Lower Calera Creek) may begin as early as May 1 and extend no later than October 15. Dewatering in tidally-influenced reaches (Reaches A and B of Lower Berryessa Creek and Reach A of Lower Calera Creek) may begin as early as June 15 and extend no later than October 15. The dewatering system will be composed of coffer dams spanning the full width of the creek channel located at the upstream and downstream boundaries of the construction reach, 36-inch diameter fused high-density polyethylene (HDPE) pipes to convey the diverted water around the construction reach, polychlorinated vinyl pipes to convey water discharged from drain outlets to the HDPE trunk line, and riprap or equivalent erosion protection for the system discharge point. The coffer dams will be 6 feet in height and composed of gravel-filled sandbags and plastic sheeting. Design flow of the dewatering system will be 20 cubic

feet per second (cfs). If groundwater seepage occurs within the dewatered reach, pumps will be used to discharge the seepage flows to intakes of the 36-inch HDPE trunk line.

Hardscape. Exhibits D and E show a comparison of the types and quantities of existing and post-construction hardscape for the Lower Berryessa Creek and Lower Calera Creek elements, respectively. Note that the table shown in Exhibit D is a revised version from that provided in the original Notification.

PROJECT IMPACTS

Existing fish or wildlife resources the project could substantially adversely affect include: The State Species of Special Concern Pacific pond turtle (PPT) (*Actinemys marmorata*), and tricolored blackbird (*Agelaius tricolor*); the State Threatened longfin smelt (*Spirinchus thaleichthys*); native and non-native fish species; and nesting birds.

The adverse effects the project could have on the fish or wildlife resources identified above, without implementation of the Measures to Protect Fish and Wildlife Resources specified below, include: permanent loss of natural bed or bank; channel profile widening; loss of bank stability during construction; increased bank erosion; accelerated channel scour; increased turbidity; changes in pH; short-term release of contaminants; short-term changes in dissolved oxygen, water temperature, and stream flow; dryback of stream channels; permanent loss of wetland vegetation; permanent decline in vegetative diversity; colonization by exotic plant species; disturbance or mortality of aquatic and semi-aquatic fish and wildlife species; and disturbance to nesting birds.

Exhibit F shows the impacts to open water, wetland (brackish/freshwater), riparian, and upland habitats in the project area and the associated onsite compensatory mitigation. Active planting of native brackish and freshwater wetland vegetation will be completed within one year of project impacts. Because wetlands may take more than one year to be fully restored to pre-project or better conditions, the 5.21 acres of impacts to wetlands [consisting of brackish wetlands (1.2 acres) and seasonal wetland/freshwater marsh (4.0 acres)] are considered to be semi-permanent. Impacts to upland habitats are considered temporary, since they will be hydroseeded and restored to pre-project or better conditions.

Active planting of native riparian vegetation, which is defined for the purposes of this project as trees and shrubs located within the inboard side of the existing levees, will be completed within one year of project impacts. However, impacts to riparian vegetation (1.2 acres) are considered to be permanent due to the typical length of time required for riparian vegetation to become established after planting. The riparian vegetation impacted by the project is primarily non-native and consists of discontinuous, scattered tree and shrub plantings on the inboard side of the levees of Lower Berryessa Creek. Tree species located on the inboard side of the levees consist mainly of pine (*Pinus* spp.), holly oak (*Quercus ilex*), Mexican fan palm (*Washingtonia robusta*), ash (*Fraxinus uhdei*), London plane (*Platanus* X *acerifolia*), lollypop tree (*Myoporum laetum*), and olive

(*Olea europaea*). Shrubs consist mainly of Italian buckthorn (*Rhamnus alaternus*), coyote brush (*Baccharis pilularis*), and blue elderberry (*Sambucus mexicana*). No riparian habitat is located within the channel of Lower Calera Creek, nor within the small affected sections of Lower Penitencia Creek or Tularcitos Creek.

MEASURES TO PROTECT FISH AND WILDLIFE RESOURCES

1. Administrative Measures

Permittee shall meet each administrative requirement described below.

1.1 Documentation at Project Site. Permittee shall make the Agreement, any extensions and amendments to the Agreement, and all related notification materials and California Environmental Quality Act (CEQA) documents, readily available at the project site at all times and shall be presented to CDFW personnel, or personnel from another state, federal, or local agency upon request.

1.2 Providing Agreement to Persons at Project Site. Permittee shall provide copies of the Agreement and any extensions and amendments to the Agreement to all persons who will be working on the project at the project site on behalf of Permittee, including but not limited to contractors, subcontractors, inspectors, and monitors.

1.3 Notification of Conflicting Provisions. Permittee shall notify CDFW if Permittee determines or learns that a provision in the Agreement might conflict with a provision imposed on the project by another local, state, or federal agency. In that event, CDFW shall contact Permittee to resolve any conflict.

1.4 Project Site Entry. Permittee agrees that CDFW personnel may enter the project site at any time to verify compliance with the Agreement.

1.5 Notification of Commencement and Completion of Work. Permittee shall notify CDFW within 5 working days of beginning work and within 5 working days of completion of work within the stream channels for each construction season covered in this Agreement. Notification shall be made to Tami Schane, Environmental Scientist, by email (tami.schane@wildlife.ca.gov) or by phone (415) 831-4640.

1.6 Final Plans and Specifications. Permittee shall provide final construction plans and specifications to CDFW prior to construction. Permittee shall notify CDFW of any modifications to the project description as stated above. At the discretion of CDFW, project modifications may require an amendment or a new application.

1.7 Unauthorized Take. This Agreement does not authorize the take, including incidental take, of any State or federally listed threatened or endangered species, or of species that are otherwise protected under FGC. Permittee may be required,

as prescribed in the California and U.S. Endangered Species Acts, to obtain take coverage for State and federally listed species prior to commencement of the project. Any unauthorized take of listed species may result in prosecution and nullification of this Agreement.

2. Avoidance and Minimization Measures

To avoid or minimize adverse impacts to fish and wildlife resources identified above, Permittee shall implement each measure listed below.

2.1 Work Period. Dewatering in the non-tidally-influenced reaches (Reaches C through G of Lower Berryessa Creek and Reach B of Lower Calera Creek) shall begin no earlier than May 1 and extend no later than October 15 for each work season during the term of this Agreement. To avoid impacts to longfin smelt, dewatering in tidally-influenced reaches (Reaches A and B of Lower Berryessa Creek and Reach A of Lower Calera Creek) shall begin no earlier than June 15 and extend no later than October 15 for each work season during the term of this Agreement. Construction activities within the stream channel and riparian corridor shall be confined to the period between May 1 and October 15. Revegetation work in a given reach is not confined to this work period but shall be completed within the wet season following completion of the project in that reach. Requests for extensions to conduct work within the stream or riparian corridor shall be coordinated with Tami Schane, Environmental Scientist, by email (tami.schane@wildlife.ca.gov) or by phone (415) 831-4640.

2.2 Precipitation Forecasts. Precipitation forecasts shall be considered when planning construction activities. Construction activities shall cease and all necessary erosion control measures shall be implemented prior to the onset of substantial precipitation defined as 0.5 inch or more within a 24-hour period. Construction activities that are halted due to precipitation may resume when precipitation ceases and the National Weather Service 72-hour weather forecast indicates a 20% or less chance of precipitation. Weather forecasts shall be documented upon request by CDFW.

2.3 Dewatering. Work shall be performed in isolation from the flowing stream. The entire stream flow shall be diverted around the project work area using water-tight coffer dams and piping consistent with the final dewatering plan dated September 27, 2013, and received by CDFW in the submittal of additional information dated February 11, 2014, unless otherwise conditioned herein. Upon removal of the water diversion system, flows shall be gradually restored to the channel in a manner that avoids an erosive surge of water.

2.4 No Equipment in Wetted Areas. Equipment shall not be operated in wetted areas, including but not limited to ponded, flowing, or wetland areas, or within the live stream channel below the level of top-of-bank.

2.5 Erosion Control. Erosion control measures shall be utilized throughout all phases of the project where sediment runoff from exposed slopes threatens to enter any stream channels. At no time shall silt laden runoff be allowed to enter any stream channels. To protect exposed soils from erosion during discharges, erosion control blankets, mats, or geotextiles shall be placed over the erodible surfaces. Any erosion control materials used within the stream channels during discharges shall be removed immediately upon completion of water discharges. No erosion control materials shall contain any plastic or monofilament netting.

2.6 CDFW-Approved Qualified Biologist(s) and Monitor(s). Permittee shall submit to CDFW for written approval, the names and resumes of all qualified biologists and biological monitors involved in conducting surveys and/or monitoring work.

A qualified biologist is an individual who shall have a minimum of five years of academic training and professional experience in biological sciences and related resource management activities with a minimum of two years conducting surveys for each species that may be present within the project area.

A biological monitor is an individual who shall have academic and professional experience in biological sciences and related resource management activities as it pertains to this project, experience with construction-level biological monitoring, be able to recognize species that may be present within the project area, and be familiar with the habits and behavior of those species.

2.7 Nesting Bird Surveys. If construction, grading, or other project-related improvements are scheduled during the nesting season of protected raptors and migratory birds January 15 to September 1, a focused survey for active nests of such birds shall be conducted by a qualified biologist within fourteen (14) days prior to the beginning of project-related activities. The results of the survey shall be sent to Tami Schane, Environmental Scientist, by email (tami.schane@wildlife.ca.gov) prior to the start of project activities. Refer to Notification Number 1600-2013-0159-R3 when submitting the survey to CDFW. If an active nest is found, Permittee shall consult with the United States Fish and Wildlife Service (USFWS) and CDFW regarding appropriate action to comply with the Migratory Bird Treaty Act of 1918 and the FGC of California. If a lapse in project-related work of 15 days or longer occurs, another focused survey and if required, consultation with CDFW and USFWS, shall be required before project work can be reinitiated.

2.8 Buffers. A minimum 50-foot radius protective buffer zone shall be established around active nests except for raptors, herons, and egrets. A minimum 300-foot radius protective buffer zone shall be established around active nests for hawks, owls, herons, and egrets. Fencing or flagging shall be installed at the boundary of each protective buffer zone. All protective buffer zones shall be maintained, and

no entrance shall be allowed into protective buffer zones, until the nest becomes inactive. If monitoring shows that disturbance of actively nesting birds is occurring, buffer widths shall be increased until monitoring shows that disturbance is no longer occurring. If this is not possible, work shall cease in the area until young have fledged and the nest is no longer active.

2.9 PPT Survey. Prior to and within 48 hours of the planned start of project activities, a focused survey for PPT shall be conducted by a qualified biologist to determine if they are in the area. If PPT individuals are found, CDFW shall be notified immediately to determine the correct course of action and project activities shall not begin until approved by CDFW. CDFW may submit additional written avoidance, minimization and mitigation measures if PPT are found within the project area. Those additional measures shall be considered part of this Agreement. In addition, Permittee shall notify CDFW in any instance where Pacific pond turtles are relocated. Notification shall be made to Tami Schane, Environmental Scientist, by email (tami.schane@wildlife.ca.gov) or by phone (415) 831-4640.

2.10 PPT Exclusion. If PPT individuals are found, they shall be excluded from entering the project site. CDFW-approved exclusion fencing shall be installed around those areas or where equipment may be stockpiled. The lower edge of the fence shall be buried at least four (4) inches to prevent burrowing animals from tunneling under the fence.

2.11 Daily Species Inspection. If PPT individuals are found, after installation of the fence barrier, the biological monitor (or qualified biologist) shall conduct daily inspections of the project work area, and staging area prior to the commencement of construction activities. If the biological monitor or qualified biologist determines that sensitive species are not within the work area, equipment or materials may be moved onto the work site and project activities may commence under the direct observation of the biological monitor or qualified biologist.

2.12 Staging of Materials. Staging and storage areas for vehicles, equipment, and any other materials shall be located outside of the stream channels and banks. Stationary equipment such as motors, pumps, generators, compressors, and welders, located within or adjacent to the stream channels shall be positioned over drip-pans. Any equipment or vehicles driven and/or operated within or adjacent to the stream channels shall be checked and maintained daily, to prevent leaks of materials that if introduced to water could be deleterious to aquatic life. Vehicles shall be moved a minimum of 65 feet away from any stream channels prior to refueling and lubrication.

2.13 Hazardous Materials. Debris, soil, silt, bark, rubbish, slash, sawdust, creosote-treated wood, raw cement/concrete or washings thereof, asphalt, paint, or other coating material, oil or other petroleum products, or any other substances which

could be hazardous to aquatic life, resulting from project-related activities, shall be prevented from contaminating the soil and/or entering the waters of the State. Any of these materials, placed within or where they may enter a stream or lake, by Permittee or any party working under contract, or with the permission of the Permittee, shall be removed immediately. All chemicals stored in staging areas shall be stored in secondary containment with no less than 110% capacity. Proper storage and security shall be implemented to ensure that chemicals are not spilled or vandalized.

2.14 Spill Kits. Prior to entering the work site, all field personnel shall know the location of spill kits and trained in their appropriate use.

2.15 No Dumping of Litter or Debris. There shall be no dumping of litter or construction debris within the channel or riparian zone. All litter, debris, and waste shall be picked up daily and properly disposed at an appropriate site.

2.16 Concrete Use Near Waterways. Poured concrete, including grout associated with rock riprap, shall be excluded from the wetted channel or reservoir for a minimum period of 30 days after it is installed. During that time the concrete shall be kept moist, and runoff from the concrete shall not be allowed to enter a waterway. Commercial sealants may be applied to the poured concrete surface where difficulty in excluding water flow for a long period may occur. If sealant is used, water shall be excluded from the site until the sealant is dry.

3. Compensatory Measures

To compensate for adverse impacts to fish and wildlife resources identified above that cannot be avoided or minimized, Permittee shall implement each measure listed below.

3.1 Wetland Vegetation Mitigation. To compensate for the 5.21 acres of temporary impacts to wetland vegetation, the Permittee shall replant onsite a minimum of 6.36 acres of native wetland species, consistent with the minimum mitigation ratio of 1.2:1 (acres of impacted:acres proposed) presented in the table in Exhibit F.

3.2 Riparian Vegetation Mitigation. To compensate for the 1.2 acres of permanent impacts to riparian vegetation, the Permittee shall replant a minimum of 2.32 acres of native riparian trees, shrubs, and herbaceous perennials consistent with the minimum mitigation ratio of 1.93:1 presented in the table in Exhibit F. The riparian tree and shrub plantings shall be installed on the newly created low, earthen benches within Reaches D, E, and G of Lower Berryessa Creek.

3.3 Habitat Mitigation Monitoring Plan. Revegetation details, including but not limited to, species composition, planting locations, plant palettes, hydroseeding methods, irrigation requirements, contingency measures, plant establishment periods, and revegetation monitoring, shall be implemented according to the *Habitat Mitigation Monitoring Plan (HMMP) for the Lower Berryessa Creek Program Elements: Lower*

Berryessa Creek and Lower Calera Creek, dated January, 2014, and submitted to CDFW on February 12, 2014, unless otherwise conditioned herein. Performance criteria for percent cover, survivorship, health and vigor ratings, and non-native vegetation cover, which were not included in the HMMP, and other revisions to the HMMP, shall be submitted to CDFW for review and approval prior to commencement of project construction.

3.4 Irrigation. Supplemental watering shall be used as necessary to establish and maintain plant growth in order to meet success criteria. Irrigation shall be done in the most water efficient manner possible, such as using hand watering, drip/micro-irrigation, or through the use of a time release system.

4. Reporting Measures

Permittee shall meet each reporting requirement described below.

4.1 Annual Monitoring Report. Permittee shall provide to CDFW an annual monitoring report by December 31st of each year of monitoring until CDFW provides approval in writing that the Permittee's final mitigation success criteria have been achieved.

CONTACT INFORMATION

Any communication that Permittee or CDFW submits to the other shall be in writing and any communication or documentation shall be delivered to the address below by U.S. mail, fax, or email, or to such other address as Permittee or CDFW specifies by written notice to the other.

To Permittee:

Melanie Richardson
(contact person James Manitakos)
Santa Clara Valley Water District
5750 Almaden Expressway
San Jose, CA 95118
Phone (408) 630-2833
Fax (408) 979-5656
jmanitakos@valleywater.org

To CDFW:

Department of Fish and Wildlife
Bay Delta Region
7329 Silverado Trail
Napa, CA 94558

Attn: Lake and Streambed Alteration Program – Tami Schane
Notification #1600-2013-0159-R3
Fax (415) 831-4640 (call same number ahead of time to arrange fax time)
tami.schane@wildlife.ca.gov

LIABILITY

Permittee shall be solely liable for any violations of the Agreement, whether committed by Permittee or any person acting on behalf of Permittee, including its officers, employees, representatives, agents or contractors and subcontractors, to complete the project or any activity related to it that the Agreement authorizes.

This Agreement does not constitute CDFW's endorsement of, or require Permittee to proceed with the project. The decision to proceed with the project is Permittee's alone.

SUSPENSION AND REVOCATION

CDFW may suspend or revoke in its entirety the Agreement if it determines that Permittee or any person acting on behalf of Permittee, including its officers, employees, representatives, agents, or contractors and subcontractors, is not in compliance with the Agreement.

Before CDFW suspends or revokes the Agreement, it shall provide Permittee written notice by certified or registered mail that it intends to suspend or revoke. The notice shall state the reason(s) for the proposed suspension or revocation, provide Permittee an opportunity to correct any deficiency before CDFW suspends or revokes the Agreement, and include instructions to Permittee, if necessary, including but not limited to a directive to immediately cease the specific activity or activities that caused CDFW to issue the notice.

ENFORCEMENT

Nothing in the Agreement precludes CDFW from pursuing an enforcement action against Permittee instead of, or in addition to, suspending or revoking the Agreement.

Nothing in the Agreement limits or otherwise affects CDFW's enforcement authority or that of its enforcement personnel.

OTHER LEGAL OBLIGATIONS

This Agreement does not relieve Permittee or any person acting on behalf of Permittee, including its officers, employees, representatives, agents, or contractors and subcontractors, from obtaining any other permits or authorizations that might be required under other federal, state, or local laws or regulations before beginning the project or an activity related to it.

This Agreement does not relieve Permittee or any person acting on behalf of Permittee, including its officers, employees, representatives, agents, or contractors and subcontractors, from complying with other applicable statutes in the FGC including, but not limited to, FGC sections 2050 *et seq.* (threatened and endangered species), 3503 (bird nests and eggs), 3503.5 (birds of prey), 5650 (water pollution), 5652 (refuse disposal into water), 5901 (fish passage), 5937 (sufficient water for fish), and 5948 (obstruction of stream).

Nothing in the Agreement authorizes Permittee or any person acting on behalf of Permittee, including its officers, employees, representatives, agents, or contractors and subcontractors, to trespass.

AMENDMENT

CDFW may amend the Agreement at any time during its term if CDFW determines the amendment is necessary to protect an existing fish or wildlife resource.

Permittee may amend the Agreement at any time during its term, provided the amendment is mutually agreed to in writing by CDFW and Permittee. To request an amendment, Permittee shall submit to CDFW a completed CDFW "Request to Amend Lake or Streambed Alteration" form and include with the completed form payment of the corresponding amendment fee identified in CDFW's current fee schedule (see Cal. Code Regs., tit. 14, § 699.5).

TRANSFER AND ASSIGNMENT

This Agreement may not be transferred or assigned to another entity, and any purported transfer or assignment of the Agreement to another entity shall not be valid or effective, unless the transfer or assignment is requested by Permittee in writing, as specified below, and thereafter CDFW approves the transfer or assignment in writing.

The transfer or assignment of the Agreement to another entity shall constitute a minor amendment, and therefore to request a transfer or assignment, Permittee shall submit to CDFW a completed CDFW "Request to Amend Lake or Streambed Alteration" form and include with the completed form payment of the minor amendment fee identified in CDFW's current fee schedule (see Cal. Code Regs., tit. 14, § 699.5).

EXTENSIONS

In accordance with FGC section 1605(b), Permittee may request one extension of the Agreement, provided the request is made prior to the expiration of the Agreement's term. To request an extension, Permittee shall submit to CDFW a completed CDFW "Request to Extend Lake or Streambed Alteration" form and include with the completed form payment of the extension fee identified in CDFW's current fee schedule (see Cal.

Code Regs., tit. 14, § 699.5). CDFW shall process the extension request in accordance with FGC 1605(b) through (e).

If Permittee fails to submit a request to extend the Agreement prior to its expiration, Permittee must submit a new notification and notification fee before beginning or continuing the project the Agreement covers (FGC section 1605(f)).

EFFECTIVE DATE

The Agreement becomes effective on the date of CDFW's signature, which shall be: 1) after Permittee's signature; 2) after CDFW complies with all applicable requirements under the California Environmental Quality Act (CEQA); and 3) after payment of the applicable FGC section 711.4 filing fee listed at http://www.wildlife.ca.gov/habcon/ceqa/ceqa_changes.html.

TERM

This Agreement shall expire on December 31, 2018 unless it is terminated or extended before then. All provisions in the Agreement shall remain in force throughout its term. Permittee shall remain responsible for implementing any provisions specified herein to protect fish and wildlife resources after the Agreement expires or is terminated, as FGC section 1605(a)(2) requires.

EXHIBITS

The documents listed below are included as exhibits to the Agreement and incorporated herein by reference.

Exhibit A. (Figure 2 – Project Area)
Exhibit B. (Figure 3 – Stream Reaches of the Lower Berryessa Creek Project Element)
Exhibit C. (Figure 4 – Stream Reaches of the Lower Calera Creek Project Element)
Exhibit D. (Table 2: Existing and Proposed Hardscape Surfaces of Lower Berryessa Element) – revised and submitted to CDFW on May 7, 2014
Exhibit E. (Table 3: Existing and Proposed Hardscape Surfaces of Lower Calera Creek Element)
Exhibit F. (Table 2 – Project Impacts and Proposed Compensatory Mitigation)

AUTHORITY

If the person signing the Agreement (signatory) is doing so as a representative of Permittee, the signatory hereby acknowledges that he or she is doing so on Permittee's behalf and represents and warrants that he or she has the authority to legally bind Permittee to the provisions herein.

AUTHORIZATION

This Agreement authorizes only the project described herein. If Permittee begins or completes a project different from the project the Agreement authorizes, Permittee may be subject to civil or criminal prosecution for failing to notify CDFW in accordance with FGC section 1602.

CONCURRENCE

The undersigned accepts and agrees to comply with all provisions contained herein.

FOR SANTA CLARA VALLEY WATER DISTRICT

Melanie Richardson — 5-13-14

Melanie Richardson
Deputy Operating Officer
Watershed Design and Construction Division

Date

FOR DEPARTMENT OF FISH AND WILDLIFE

May 28, 2014

Craig Weightman
Environmental Program Manager

Date

Prepared by: Tami Schane
Environmental Scientist

Date Submitted: April 11, 2014
Date Revised and Re-Submitted: May 8, 2014
Date Revised and Re-Submitted: May 12, 2014

√ # 201290
$4482.75
Santa Clara Valley Water Dist

FOR DEPARTMENT USE ONLY				
Date Received	Amount Received	Amount Due	~~Date Complete~~	~~Notification No.~~
5/1/13	$4482.75	$		1600-2013-0159-3

√ # 201289
Santa Clara Valley Water District

Schane
Lt Nores
Wm Rodriguez

STATE OF CALIFORNIA
DEPARTMENT OF FISH AND GAME

NOTIFICATION OF LAKE OR STREAMBED ALTERATION

Complete EACH field, unless otherwise indicated, following the enclosed instructions and submit ALL required enclosures. Attach additional pages, if necessary.

Fish & Game
MAY 01 2013
Yountville

1. APPLICANT PROPOSING PROJECT

Name	Ms. Melanie Richardson		
Business/Agency	Santa Clara Valley Water District		
Street Address	5750 Almaden Expressway		
City, State, Zip	San Jose, CA 95118-3686		
Telephone	(408) 265-2600	Fax	(408) 979-5656
Email	MRichardson@ValleyWater.org		

2. CONTACT PERSON (*Complete only if different from applicant*)

Name	David Dunlap		
Street Address	Santa Clara Valley Water District, 5750 Almaden Expressway		
City, State, Zip	San Jose, CA 95118-3686		
Telephone	(408) 265-2607	Fax	(408) 979-5657
Email	ddunlap@valleywater.org		

3. PROPERTY OWNER (*Complete only if different from applicant*)

Name			
Street Address			
City, State, Zip			
Telephone		Fax	
Email			

4. PROJECT NAME AND AGREEMENT TERM

A. Project Name	Lower Berryessa and Lower Calera Creek Flood Protection Improvements Project			
B. Agreement Term Requested	☑ Regular (*5 years or less*) ☐ Long-term (*greater than 5 years*)			
C. Project Term		D. Seasonal Work Period		E. Number of Work Days
Beginning (*year*)	Ending (*year*)	Start Date (*month/day*)	End Date (*month/day*)	
2014	2019	04/15	10/15	372.00

5. AGREEMENT TYPE

Check the applicable box. If box B, C, D, or E is checked, complete the specified attachment.

A.	☑ Standard *(Most construction projects, excluding the categories listed below)*	
B.	☐ Gravel/Sand/Rock Extraction (*Attachment A*)	*Mine I.D. Number:* _____
C.	☐ Timber Harvesting (*Attachment B*)	THP *Number:* _____
D.	☐ Water Diversion/Extraction/Impoundment (*Attachment C*)	*SWRCB Number:* _____
E.	☐ Routine Maintenance (*Attachment D*)	
F.	☐ DFG Fisheries Restoration Grant Program (FRGP)	*FRGP Contract Number:* _____
G.	☐ Master	
H.	☐ Master Timber Harvesting	

6. FEES

Please see the current fee schedule to determine the appropriate notification fee. Itemize each project's estimated cost and corresponding fee. *Note: The Department may not process this notification until the correct fee has been received.*

	A. Project	B. Project Cost	C. Project Fee
1	Lower Berryessa Creek Project	$500,000.00	$4,482.75
2	Lower Calera Creek Project	$500,000.00	$4,482.75
3			
4			
5			
		D. Base Fee *(if applicable)*	$0.00
		E. TOTAL FEE ENCLOSED	$8,965.50

7. PRIOR NOTIFICATION OR ORDER

A. Has a notification previously been submitted to, or a Lake or Streambed Alteration Agreement previously been issued by, the Department for the project described in this notification?

☐ Yes (*Provide the information below*) ☑ No

Applicant: _____ Notification Number: _____ Date: _____

B. Is this notification being submitted in response to an order, notice, or other directive ("order") by a court or administrative agency (including the Department)?

☑ No ☐ Yes (*Enclose a copy of the order, notice, or other directive. If the directive is not in writing, identify the person who directed the applicant to submit this notification and the agency he or she represents, and describe the circumstances relating to the order.*)

☐ *Continued on additional page(s)*

8. PROJECT LOCATION

A. Address or description of project location.

(Include a map that marks the location of the project with a reference to the nearest city or town, and provide driving directions from a major road or highway)

The Project's approximate 11,760 linear feet fall entirely within a developed portion of the City of Milpitas in eastern Santa Clara County. The area is generally bounded by Calaveras Boulevard to the south, I-880 to the west, Dixon Landing Road to the north, and within 1,000 feet of I-680 to the east.

The Project is located within 8,820 feet of Lower Berryessa Creek and 3,000 feet of Calera Creek; a short 75-foot section of Tularcitos Creek and a short 30-foot section of Lower Penitencia Creek would also be affected at their confluences with Lower Berryessa Creek. The extent of work within Lower Berryessa Creek extends upstream from the confluence of Lower Penitencia and Berryessa Creeks to the downstream face of the bridge crossing of Calaveras Boulevard (Figure 1 & 2, Attachment A). Work in Lower Calera Creek begins at the confluence of Berryessa Creek and extends upstream approximately 3,000 linear feet to the drop structure behind Milpitas High School.

The project site can be accessed from I-880 by taking the Calaveras Boulevard exit towards McArthy Boulevard, turning onto E Calaveras Boulevard and continuing until encountering the southern reach (Reach G) of Lower Berryessa Creek.

☐ *Continued on additional page(s)*

B. River, stream, or lake affected by the project.	Lower Berryessa, Lower Calera, Lower Penitencia and Tularcitos Creeks
C. What water body is the river, stream, or lake tributary to?	San Francisco Bay via Coyote Creek
D. Is the river or stream segment affected by the project listed in the state or federal Wild and Scenic Rivers Acts?	☐ Yes ☑ No ☐ Unknown
E. County	Santa Clara County

F. USGS 7.5 Minute Quad Map Name	G. Township	H. Range	I. Section	J. ¼ Section
Milpitas	*	*	*	*
*NOTE: The project area is outside of the				
Bureau of Land Management				
Township and Range System.				

☐ *Continued on additional page(s)*

K. Meridian (*check one*) ☐ Humboldt ☑ Mt. Diablo ☐ San Bernardino

L. Assessor's Parcel Number(s)

022-02-014, 022-02-024, 022-03-029, 022-03-031, 022-03-331, 022-31-014, 022-31-016, 022-31-017, 022-31-020, 022-37-035, 022-38-016, 026-18-000, 026-18-001, 026-18-003, 026-18-009... (7 additional)

☑ *Continued on additional page(s)*

M. Coordinates (*If available, provide at least latitude/longitude or UTM coordinates and check appropriate boxes)*

Latitude/Longitude	*Latitude:* 37.4383338 N	*Longitude:* 121.905098 W	
	☐ Degrees/Minutes/Seconds	☑ Decimal Degrees	☐ Decimal Minutes
UTM	*Easting:*	*Northing:*	☐ Zone 10 ☐ Zone 11
Datum used for Latitude/Longitude or UTM	☐ NAD 27	☑ NAD 83 or WGS 84	

9. PROJECT CATEGORY AND WORK TYPE *(Check each box that applies)*

PROJECT CATEGORY	NEW CONSTRUCTION	REPLACE EXISTING STRUCTURE	REPAIR/MAINTAIN EXISTING STRUCTURE
Bank stabilization – bioengineering/recontouring	☐	☐	☐
Bank stabilization – rip-rap/retaining wall/gabion	☐	☐	☐
Boat dock/pier	☐	☐	☐
Boat ramp	☐	☐	☐
Bridge	☐	☑	☐
Channel clearing/vegetation management	☐	☐	☑
Culvert	☐	☐	☐
Debris basin	☐	☐	☐
Dam	☐	☐	☐
Diversion structure – weir or pump intake	☐	☐	☐
Filling of wetland, river, stream, or lake	☐	☐	☐
Geotechnical survey	☐	☐	☐
Habitat enhancement – revegetation/mitigation	☐	☐	☐
Levee	☑	☑	☐
Low water crossing	☐	☐	☐
Road/trail	☐	☑	☐
Sediment removal – pond, stream, or marina	☑	☐	☑
Storm drain outfall structure	☐	☑	☐
Temporary stream crossing	☐	☐	☐
Utility crossing : Horizontal Directional Drilling	☐	☐	☐
Jack/bore	☐	☐	☐
Open trench	☐	☐	☐
Other *(specify)*: Floodwalls - to replace existing levees	☑	☑	☐

10. PROJECT DESCRIPTION

A. Describe the project in detail. Photographs of the project location and immediate surrounding area should be included.

- Include any structures (e.g., rip-rap, culverts, or channel clearing) that will be placed, built, or completed in or near the stream, river, or lake.
- Specify the type and volume of materials that will be used.
- If water will be diverted or drafted, specify the purpose or use.

Enclose diagrams, drawings, plans, and/or maps that provide all of the following: site specific construction details; the dimensions of each structure and/or extent of each activity in the bed, channel, bank or floodplain; an overview of the entire project area (i.e., "bird's-eye view") showing the location of each structure and/or activity, significant area features, and where the equipment/machinery will enter and exit the project area.

The Projects would modify the existing flood protection structures, as well as make improvements to the existing maintenance access roads for the flood control channels, in order to contain the one percent flood, also known as the 100-year flood, with adequate freeboard to meet the District's requirements. Proposed improvements include; raising creek levees; constructing floodwalls along existing creek levees; widening channel cross-sections; improving maintenance access while reducing the number of access roads; and providing an in-channel low earthen bench for the establishment (creation) of native vegetation.

The Projects would also preserve wetland habitat functions to the extent feasible; improve durability of the levees; and accommodate the City of Milpitas' proposed trail system within the levee design.

Construction would result in a total of approximately 237,400 cubic yards of excavation and 195,800 cubic yards of fill (approximately 26,400 truckloads total). Although in-channel project construction activities are proposed in the dry season (between April15 and October 15 of any year), some temporary dewatering may be required. Temporary diversion around work areas would be achieved by one of the following types of diversions: temporary durable plastic K-rail barrier system, water-tight cofferdam, or inflatable bladder dam.

The Projects' Operations and Maintenance Manual will be developed late in the construction phase, when an accurate projection of site maintenance impacts can be determined. A separate Notification will be prepared, if necessary, at that time to address the Project's operational impacts.

Please see attached Supplemental Information document for additional detail, site photographs, and design drawings.

☑ *Continued on additional page(s)*

B. Specify the equipment and machinery that will be used to complete the project.

The equipment required for construction within each channel reach would depend on the improvement type and construction activity proposed. The following equipment types could be used during construction of the overall project: articulated trucks, backhoes, bulldozers, crane, compactors, concrete trucks, excavators, fence post auger, gradeall, graders, hand equipment, loaders, paver, pumps, pugmill, scrapers, and soil stabilizer.

☐ *Continued on additional page(s)*

C. Will water be present during the proposed work period (specified in box 4.D) in the stream, river, or lake (specified in box 8.B).	☑ Yes ☐ No (*Skip to box 11*)
D. Will the proposed project require work in the wetted portion of the channel?	☑ Yes (*Enclose a plan to divert water around work site*) ☐ No

11. PROJECT IMPACTS

A. Describe impacts to the bed, channel, and bank of the river, stream, or lake, and the associated riparian habitat. Specify the dimensions of the modifications in length (linear feet) and area (square feet or acres) and the type and volume of material (cubic yards) that will be moved, displaced, or otherwise disturbed, if applicable.

The Project would result in unavoidable temporary impacts to approximately 5.202 acres of wetlands, 4.166 acres of open waters, and 23.81 acres of adjacent habitats (21.92 ac disturbed/ruderal; 1.89 ac riparian) below the tops of banks, all considered jurisdictional. All impacts are considered temporary, because there would be no net loss of waters or wetlands following implementation and on-site mitigation.
Please see attached Supplemental Information document for additional detail.

☑ *Continued on additional page(s)*

B. Will the project affect any vegetation? ☑ Yes (*Complete the tables below*) ☐ No

Vegetation Type	Temporary Impact	Permanent Impact
Brackish Marsh (1.205ac) + Seasonal wetland (4.012ac)	Linear feet: _____ Total area: 5.20 ac	Linear feet: 0 Total area: 0
Riparian (trees + shrubs) Please see attached pages for more info.	Linear feet: _____ Total area: 1.89 ac	Linear feet: 0 Total area: 0

Tree Species	Number of Trees to be Removed	Trunk Diameter (range)
Please see attached Supplemental Info		
document for a more detailed		
discussion of habitat impacts.		

☑ *Continued on additional page(s)*

C. Are any special status animal or plant species, or habitat that could support such species, known to be present on or near the project site?

☑ Yes *(List each species and/or describe the habitat below)* ☐ No ☐ Unknown

The site has potential to support the following: tricolored blackbird; red-tailed hawk; red-shouldered hawk; western pond turtle; CRLF. See attached pages for additional detail.

☑ *Continued on additional page(s)*

D. Identify the source(s) of information that supports a "yes" or "no" answer above in Box 11.C.

Lower Berryessa Creek Project EIR, CNDDB search, USFWS inquiry, Lower Berryessa Creek Project Biological Assessment, CRLF surveys, and District ongoing biological surveys and monitoring.

☑ *Continued on additional page(s)*

E. Has a biological study been completed for the project site?

☑ Yes (*Enclose the biological study*) ☐ No

Note: A biological assessment or study may be required to evaluate potential project impacts on biological resources.

F. Has a hydrological study been completed for the project or project site?

☑ Yes (*Enclose the hydrological study*) ☐ No

Note: A hydrological study or other information on site hydraulics (e.g., flows, channel characteristics, and/or flood recurrence intervals) may be required to evaluate potential project impacts on hydrology.

12. MEASURES TO PROTECT FISH, WILDIFE, AND PLANT RESOURCES

A. Describe the techniques that will be used to prevent sediment from entering watercourses during and after construction.

In order to avoid and minimize sediment impacts to waters to the maximum extent practicable, the District would implement measures from: its existing Best Management Practices (BMP) Handbook (provided in Appendix C) and specified in the Project's plans and specifications to the contractor; those identified in the FEIR; and, the measures to be spelled out in the project-specific Operations & Maintenance Manual.

Please see attached Supplemental Information document for more detail; for example, avoidance of concrete channel linings, wherever possible.

☑ *Continued on additional page(s)*

B. Describe project avoidance and/or minimization measures to protect fish, wildlife, and plant resources.

The District designed the projects to avoid and minimize impacts to fish, wildlife, and plant resources to the maximum extent practicable, by avoiding all permanent impacts to the existing soft-bottom channel (allowing for re-establishment of vegetation and habitat within the channel following project completion); by locating all staging areas outside of active channels; by planning in-channel work outside of the rainy season; by requiring pre-construction surveys for sensitive species; and by implementing numerous measures from their existing Best Management Practices (BMP) Handbook.

Please see attached Supplemental Information document for more detail.

☑ *Continued on additional page(s)*

C. Describe any project mitigation and/or compensation measures to protect fish, wildlife, and plant resources.

To mitigate for potential temporary impacts to fish, wildlife, and plant resources associated with project construction, the District would: allow for natural re-establishment of plant species within the newly created channels; passively create (through channel widening) additional in-channel habitat for a net gain in wetlands and waters; plant the newly-created in-channel low earthen benches with riparian vegetation to promote habitat development and create buffer habitat to anticipated wetlands; and seed and/or plant disturbed levee slopes with native species.

Please see attached Supplemental Information document for more detail.

☑ *Continued on additional page(s)*

13. PERMITS

List any local, state, and federal permits required for the project and check the corresponding box(es). Enclose a copy of each permit that has been issued.

A.	Army Corps of Engineers 404 Individual Permit	☑ Applied	☐ Issued
B.	Regional Water Quality Control Board 401 Water Quality Certification	☑ Applied	☐ Issued
C.		☐ Applied	☐ Issued

D. Unknown whether ☐ local, ☐ state, or ☐ federal permit is needed for the project. (*Check each box that applies*)

☐ *Continued on additional page(s)*

14. ENVIRONMENTAL REVIEW

A. Has a draft or final document been prepared for the project pursuant to the California Environmental Quality Act (CEQA), National Environmental Protection Act (NEPA), California Endangered Species Act (CESA) and/or federal Endangered Species Act (ESA)?

☑ Yes (*Check the box for each CEQA, NEPA, CESA, and ESA document that has been prepared and enclose a copy of each*)

☐ No (*Check the box for each CEQA, NEPA, CESA, and ESA document listed below that will be or is being prepared*)

☐ Notice of Exemption	☐ Mitigated Negative Declaration	☐ NEPA document (*type*):
☐ Initial Study	☑ Environmental Impact Report	☐ CESA document (*type*):
☐ Negative Declaration	☑ Notice of Determination *(Enclose)*	☑ ESA document (*type*): USFWS BA
☐ THP/ NTMP	☐ Mitigation, Monitoring, Reporting Plan	

B. State Clearinghouse Number (*if applicable*)	#2007092084		
C. Has a CEQA lead agency been determined?	☑ Yes (*Complete boxes D, E, and F*)	☐ No (*Skip to box 14.G*)	
D. CEQA Lead Agency	Santa Clara Valley Water District		
E. Contact Person	David Dunlap	F. Telephone Number	(408) 265-2607

G. If the project described in this notification is part of a larger project or plan, briefly describe that larger project or plan.

The Lower Berryessa and Lower Calera Creek Flood Protection Improvements Project proposes to construct 2 elements of the broader Lower Berryessa Creek Program (Program), which has the goal of improving flood protection for the expanded Lower Berryessa Creek watershed. The broader Program includes construction of flood-protection-related elements to be implemented on portions of four creeks: Berryessa Creek, Calera Creek, Tularcitos Creek, and Penitencia Creek.

Please see attached Supplemental Information document for additional details of the Lower Berryessa Creek Program.

☑ *Continued on additional page(s)*

H. Has an environmental filing fee (Fish and Game Code section 711.4) been paid?

☑ Yes (*Enclose proof of payment*) ☐ No (*Briefly explain below the reason a filing fee has not been paid*)

Final fee enclosed.

Note: If a filing fee is required, the Department may not finalize a Lake or Streambed Alteration Agreement until the filing fee is paid.

15. SITE INSPECTION

Check one box only.

☐ In the event the Department determines that a site inspection is necessary, I hereby authorize a Department representative to enter the property where the project described in this notification will take place at any reasonable time, and hereby certify that I am authorized to grant the Department such entry.

☑ I request the Department to first contact (*insert name*) David Dunlap at (*insert telephone number*) (408) 265-2607 to schedule a date and time to enter the property where the project described in this notification will take place. I understand that this may delay the Department's determination as to whether a Lake or Streambed Alteration Agreement is required and/or the Department's issuance of a draft agreement pursuant to this notification.

16. DIGITAL FORMAT

Is any of the information included as part of the notification available in digital format (i.e., CD, DVD, etc.)?
☑ Yes (Please enclose the information via digital media with the completed notification form) ☐ No

17. SIGNATURE

I hereby certify that to the best of my knowledge the information in this notification is true and correct and that I am authorized to sign this notification as, or on behalf of, the applicant. I understand that if any information in this notification is found to be untrue or incorrect, the Department may suspend processing this notification or suspend or revoke any draft or final Lake or Streambed Alteration Agreement issued pursuant to this notification. I understand also that if any information in this notification is found to be untrue or incorrect and the project described in this notification has already begun, I and/or the applicant may be subject to civil or criminal prosecution. I understand that this notification applies only to the project(s) described herein and that I and/or the applicant may be subject to civil or criminal prosecution for undertaking any project not described herein unless the Department has been separately notified of that project in accordance with Fish and Game Code section 1602 or 1611.

Melanie Richardson
Signature of Applicant or Applicant's Authorized Representative

4-29-13
Date

Melanie Richardson
Print Name

NOTICE OF DETERMINATION

TO: Office of Planning and Research
Post Office Box 3044
Sacramento, California 95812-3044

FROM: California Department of Fish and Wildlife
Bay Delta Region
7329 Silverado Trail
Napa, California 94558

SUBJECT: Filing of Notice of Determination in compliance with Section 21108 or 21152 of the Public Resources Code

PROJECT TITLE: Lower Berryessa and Lower Calera Creek Flood Protection Improvements Project

STATE CLEARINGHOUSE NUMBER: 2007092084

LEAD AGENCY: Santa Clara Valley Water District
CONTACT: James Manitakos, Environmental Planner II, (408) 630-2833

RESPONSIBLE AGENCY: California Department of Fish and Wildlife
CONTACT: Tami Schane, Environmental Scientist, (415) 831-4640

PROJECT DESCRIPTION / LOCATION: The project proposes to implement creek channel improvements that will result in the containment of flow in the channel with adequate freeboard requirements in Lower Berryessa and Lower Calera Creeks. The improvements include raising creek levees, constructing floodwalls along existing levees, widening channel cross sections, improving maintenance access while reducing the number of access roads, and providing an in-channel, low, earthen bench for planting of native riparian vegetation. The California Department of Fish and Wildlife is executing a Lake and Streambed Alteration Agreement Number 1600-2013-0159-R3 pursuant to Section 1602 of the Fish and Game Code to the project Applicant, Melanie Richardson, Santa Clara Valley Water District.

This is to advise that the California Department of Fish and Wildlife as a Responsible Agency approved the project described above on May 28, 2014 and has made the following determinations regarding the above described project pursuant to section 15096 (i).

1. The project ***will not*** have a significant effect on the environment.
2. An EIR was prepared for this project pursuant to the provisions of CEQA.
3. Mitigation measures ***were*** made a condition of the approval of the project.
4. A Statement of Overriding Considerations ***was not*** adopted for this project.
5. Findings ***were not*** made pursuant to the provisions of CEQA.

This is to certify that a copy of the EIR prepared for this project is available to the general public and may be reviewed at: ***http://www.dot.ca.gov/dist4/envdocs.htm***

Craig J. Weightman
Environmental Program Manager
Bay Delta Region

Date Received for Filing: _____

THIS PAGE INTENTIONALLY LEFT BLANK

California Natural Resources Agency
DEPARTMENT OF FISH AND WILDLIFE
Bay Delta Region
7329 Silverado Trail
Napa, CA 94558
(707) 944-5520
www.wildlife.ca.gov

EDMUND G. BROWN, Jr., *Governor*
CHARLTON H. BONHAM, Director

September 30, 2015

James Manitakos
Santa Clara Valley Water District
5750 Almaden Expressway
San Jose, CA 95118

Subject: Amendment of Lake or Streambed Alteration Agreement
Notification No. 1600-2013-0159-R3
Lower Berryessa and Lower Calera Creek Flood Protection Improvements Project

Dear Mr. Manitakos:

The Department of Fish and Wildlife (Department) has received your request to amend Lake or Streambed Alteration Agreement 1600-2013-0159-R3 (Agreement) and the required fee in the amount of $613.75 for a major amendment. Your request to amend the Agreement includes modification of Avoidance and Minimization Measure 2.4, which states, "Equipment shall not be operated in wetted areas, including but not limited to ponded, flowing, or wetland areas, or within the live stream channel below the level of top-of-bank". The purpose of amending Avoidance and Minimization Measure 2.4 is to allow temporary use of a backhoe on the existing depressed access road within Reaches D through G of the project area to assist soil investigations and determine sediment suitability for salvage and re-use in the construction of project riparian benches.

Reaches D through G are located upstream of channel reaches A and B, which are currently under active construction. Reaches D through G have not been dewatered during the 2015 construction season, and will not be dewatered during the soil investigations. A backhoe will be placed on the depressed channel access road, and its boom arm extended to excavate a total of 24 pits, each measuring 4-5 feet deep, from sediment deposited below top-of-bank. Each pit will be visually assessed in the field for soil moisture, depth, thickness, and texture; water table depth (if present); capillary zone above the water table (if present); soil structure; potential root barriers including hardpan/clay lenses, buried pavement, or anoxic materials; and presence of fill material. Soil samples will also be collected for laboratory analysis of U.S. Department of Agriculture texture, percent organic matter, pH, electrical conductivity, and macro/micro nutrient concentrations. After sampling is completed at each pit, the excavated soil will be placed back into the pits and the areas restored to pre-existing conditions.

Avoidance and Minimization Measure 2.4 shall be amended as follows:

"Equipment shall not be operated in wetted areas, including but not limited to ponded, flowing, or wetland areas, or within the live stream channel below the level of top-of-bank, with the exception of temporary placement of a backhoe on the depressed access road in Reaches D through G to enable collection of sediment samples from sediment deposited below top-of-bank. Sediment samples taken below top-of-bank shall be taken only from dry, non-submerged sediment, and no operation of any parts of the equipment, including boom arm, shall be placed below the surface of standing or flowing water located in the stream channel. The backhoe shall be removed from the depressed access road and placed in an upland location in the event that precipitation is forecast, consistent with Measure 2.2 in the original Agreement."

The Department hereby agrees to amend the Agreement as requested. All conditions in the Agreement remain in effect.

Please sign and return one copy of this letter to acknowledge the amendment. Copies of the Agreement and this amendment must be readily available at project worksites and must be presented when requested by a Department representative or agency with inspection authority.

If you have any questions regarding this matter, please contact Tami Schane, Environmental Scientist at (415) 831-4640 or tami.schane@wildlife.ca.gov.

Sincerely,

Craig Weightman
Environmental Program Manager

cc: Tami Schane, Environmental Scientist
Brenda Blinn, Senior Environmental Scientist (Supervisory)

ec: James Manitakos (JManitakos@valleywater.org)

ACKNOWLEDGEMENT

I hereby agree to the above-referenced amendment.

Print Name: LIANG LEE Date: 10/1/15

Signature: C. Liang Lee

FOR DEPARTMENT USE ONLY				
Date Received	Fee Enclosed	Approved /	Date Approved	Expiration Date
9/11/2015	$ 613.75	☐ Yes ☐ No		

V#227399
SCVWD

Schane
Lt. Moore

STATE OF CALIFORNIA
DEPARTMENT OF FISH AND WILDLIFE

REQUEST TO AMEND
LAKE OR STREAMBED ALTERATION AGREEMENT

Complete EACH field and include all required enclosures. Attach additional pages, if necessary.

1. APPLICANT REQUESTING AMENDMENT

If the applicant is a business, agency, or utility, please include the name of the applicant's representative, who should be an employee of the applicant.

Name	James Manitakos, Environmental Planner II		
Business/Agency	Santa Clara Valley Water District		
Street Address	5750 Almaden Expressway		
City, State, Zip	San Jose, CA 95118		
Telephone	408-630-2833	Fax	
Email	jmanitakos@valleywater.org		

Fish & Wildlife
SEP 11 2015
Napa

2. PROJECT INFORMATION

Agreement Number	1600-2013-0159-R3, Lower Berryessa Creek
Expiration Date	December 31, 2018

3. AMENDMENT REQUEST AND FEE

Check the applicable box below and refer to the current fee schedule to determine the appropriate amendment fee.

- A minor amendment is one that would not significantly modify the scope or nature of any project covered by the agreement or any measure included in the agreement to protect fish and wildlife resources.
- A major amendment is one that would significantly modify the scope or nature of any project covered by the agreement or any measure included in the agreement to protect fish and wildlife resources, or require additional environmental review.

☐ Minor Amendment ☑ Major Amendment

Note: The Department may not process requests for amendments until it receives the correct fee.

4. AMENDMENT DESCRIPTION

A. Describe the amendment in detail

- Include any structures (e.g., rip-rap, culverts, or channel clearing) that will be placed, built, or completed in or near the stream, river, or lake.
- Specify the type and volume of materials that will be used.
- If water will be diverted or drafted, specify the purpose or use.

Enclose diagrams, drawings, plans, and/or maps that provide all of the following: site specific construction details; the dimensions of each structure and/or extent of each activity in the bed, channel, bank or floodplain; an overview of the entire project area (i.e., "bird's-eye view") showing the location of each structure and/or activity, significant area features, and where the equipment/machinery will enter and exit the project area.

Avoidance and Minimization Measure 2.4 of the existing agreement states: "No equipment in wetted areas. Equipment shall not be operated in wetted areas, including but not limited to ponded, flowing, or wetland areas, or within the live channel below the level of top of bank."

The District requests that the agreement be amended to expressly allow temporary use off a backhoe on existing depressed access roads to assist soil investigations and determine sediment suitability for salvage and re-use in the construction of project riparian benches. A total of 24 locations would be sampled over a 2 to 3 day period between September 28 and October 15, 2016.

☑ Continued on additional page(s)

B. Explain the reason(s) for the amendment request

To allow more efficient collection of sediment samples than is possible using only hand tools.

☑ Continued on additional page(s)

3. SIGNATURE

I hereby certify that to the best of my knowledge the information in this amendment request ("request") is true and correct and that I am authorized to sign this request as, or on behalf of, the applicant. I understand that if any information in this request is found to be untrue or incorrect, the Department may suspend processing this request or suspend or revoke any draft or final Lake or Streambed Alteration Agreement issued pursuant to this request. I understand also that if any information in this request is found to be untrue or incorrect and the changes described in this request has already begun, I and/or the applicant may be subject to civil or criminal prosecution. I understand that this notification applies only to the project(s) described herein and that I and/or the applicant may be subject to civil or criminal prosecution for undertaking any project not described herein, unless the Department has been separately notified of that project in accordance with Fish and Game Code section 1602 or 1611.

James Manitakos

Digitally signed by James Manitakos
DN: dc=gov, dc=scvwd, ou=SCVWD Users, ou=Password Policy, cn=James Manitakos, email=JManitakos@valleywater.org
Date: 2015.09.09 09:47:09 -07'00'

Signature of Applicant or Applicant's Authorized Representative

9/8/2015

Date

James Manitakos

Print Name

Note: If approved, a copy of this form must be available at the work site with the original agreement.

THIS PAGE INTENTIONALLY LEFT BLANK

California Natural Resources Agency
DEPARTMENT OF FISH AND WILDLIFE
Bay Delta Region
7329 Silverado Trail
Napa, CA 94558
(707) 944-5500
www.wildlife.ca.gov

EDMUND G. BROWN, Jr., Governor
CHARLTON H. BONHAM, Director

June 5, 2017

Melanie Richardson
Santa Clara Valley Water District
5750 Almaden Expressway
San Jose, CA 95118

Dear Ms. Richardson:

Amendment 2 of Lake or Streambed Alteration Agreement, Notification No. 1600-2013-0159-R3, Lower Berryessa and Lower Calera Creek Flood Protection Improvements Project

The California Department of Fish and Wildlife (CDFW) has received your request to amend Lake or Streambed Alteration Agreement 1600-2013-0159-R3 (Agreement) and the required fee in the amount of $421 for a minor amendment. Your request to amend the Agreement includes modification to the original language on page 2, section titled Levees and Floodwalls, 2nd paragraph, first sentence. The purpose of amending this sentence is to correct the height of the project floodwall, specifically in Reach D of the project in Milpitas, CA since this section of the floodwall will be up to 14 feet in height above the adjacent ground surface on the outboard side of the wall. The overall goal of the project is to provide 100-year flood protection for the Lower Berryessa Creek watershed by modifying the existing flood protection structures, as well as by improving the existing maintenance access roads for the flood control channels.

CDFW hereby agrees to amend the Agreement as requested. All conditions in the Agreement remain in effect.

Text proposed for deletion has been marked with ~~strikethrough~~, and text proposed for insertion is marked in **bold**.

Change first sentence of second paragraph in Levees and Floodwalls section
From:

"Floodwalls varying in height from 6 feet to 9 feet above the adjacent elevation will be constructed along the southwestern side (left bank, facing downstream) of the channel for the entire length of the Lower Berryessa Creek."

To:

"Floodwalls varying in height ~~from 6 feet to 9 feet~~ **up to 14 feet** above the adjacent elevation will be constructed along the southwestern side (left bank, facing downstream) of the channel for the entire length of the Lower Berryessa Creek."

Copies of the Agreement and this amendment must be readily available at project worksites and must be presented when requested by a CDFW representative or agency with inspection authority.

If you have any questions regarding this letter, please contact Mayra Molina, Environmental Scientist at (707) 944-5596 or by email at mayra.molina@wildlife.ca.gov.

Sincerely,

Craig J. Weightman, Environmental Program Manager

cc: Santa Clara Valley Water District
James Manitakos
jmanitakos@valleywater.org

California Department of Fish and Wildlife
Lieutenant Moore

FOR DEPARTMENT USE ONLY				
Date Received	Fee Enclosed	Approved?	Date Approved	Expiration Date
5-24-2017	$ 421.00	☒ Yes ☐ No	6-5-2017	12-31-2018

#250089
SCVWD

Molina
LT. Moore

STATE OF CALIFORNIA
DEPARTMENT OF FISH AND WILDLIFE

REQUEST TO AMEND
LAKE OR STREAMBED ALTERATION AGREEMENT

Complete EACH field and include all required enclosures. Attach additional pages, if necessary.

1. APPLICANT REQUESTING AMENDMENT

If the applicant is a business, agency, or utility, please include the name of the applicant's representative, who should be an employee of the applicant.

Name	Melanie Richardson		
Business/Agency	Santa Clara Valley Water District		
Street Address	5750 Almaden Expressway		
City, State, Zip	San Jose, CA 95118		
Telephone	408-265-2600	Fax	
Email	mrichardson@valleywater.org		

Fish & Wildlife
MAY 24 2017
Napa

2. PROJECT INFORMATION

Agreement Number	1600-2013-0159-R3, Lower Berryessa Creek Flood Protection Improvements Project
Expiration Date	December 31, 2018

3. AMENDMENT REQUEST AND FEE

Check the applicable box below and refer to the current fee schedule to determine the appropriate amendment fee.

- A minor amendment is one that would not significantly modify the scope or nature of any project covered by the agreement or any measure included in the agreement to protect fish and wildlife resources.
- A major amendment is one that would significantly modify the scope or nature of any project covered by the agreement or any measure included in the agreement to protect fish and wildlife resources, or require additional environmental review.

☑ Minor Amendment ☐ Major Amendment

Note: The Department may not process requests for amendments until it receives the correct fee.

REQUEST TO AMEND LAKE OR STREAMBED ALTERATION AGREEMENT

4. AMENDMENT DESCRIPTION

A. Describe the amendment in detail

- Include any structures (e.g., rip-rap, culverts, or channel clearing) that will be placed, built, or completed in or near the stream, river, or lake.
- Specify the type and volume of materials that will be used.
- If water will be diverted or drafted, specify the purpose or use.

Enclose diagrams, drawings, plans, and/or maps that provide all of the following: site specific construction details; the dimensions of each structure and/or extent of each activity in the bed, channel, bank or floodplain; an overview of the entire project area (i.e., "bird's-eye view") showing the location of each structure and/or activity, significant area features, and where the equipment/machinery will enter and exit the project area.

The following changes to the text of the original LSAA:

Page 2, Levees and Floodwalls, 2nd paragraph, first sentence: Change "6 to 9 feet" to " up to 14 feet."

☐ Continued on additional page(s)

B. Explain the reason(s) for the amendment request

Original LSAA inaccurately described the height of the project floodwall in Reach D of the project in Milpitas, CA. This section of floodwall will be up to 14 ft in height above the adjacent ground surface on the outboard side of the wall.

☐ Continued on additional page(s)

3. SIGNATURE

I hereby certify that to the best of my knowledge the information in this amendment request ("request") is true and correct and that I am authorized to sign this request as, or on behalf of, the applicant. I understand that if any information in this request is found to be untrue or incorrect, the Department may suspend processing this request or suspend or revoke any draft or final Lake or Streambed Alteration Agreement issued pursuant to this request. I understand also that if any information in this request is found to be untrue or incorrect and the changes described in this request has already begun, I and/or the applicant may be subject to civil or criminal prosecution. I understand that this notification applies only to the project(s) described herein and that I and/or the applicant may be subject to civil or criminal prosecution for undertaking any project not described herein, unless the Department has been separately notified of that project in accordance with Fish and Game Code section 1602 or 1611.

Melanie Richardson

Signature of Applicant or Applicant's Authorized Representative

5-19-17

Date

Melanie Richardson

Print Name

Note: If approved, a copy of this form must be available at the work site with the original agreement.

California Natural Resources Agency
DEPARTMENT OF FISH AND WILDLIFE
Bay Delta Region
2825 Cordelia Road, Suite 100
Fairfield, CA 94534
(707) 428-2002
www.wildlife.ca.gov

EDMUND G. BROWN, Jr., Governor
CHARLTON H. BONHAM, Director

June 5, 2018

James Manitakos
Santa Clara Valley Water District
5750 Almaden Expressway
San Jose, CA 95118

Dear Mr. Manitakos:

Amendment 3 of Lake or Streambed Alteration Agreement, Notification No. 1600-2013-0159-R3, Lower Berryessa and Lower Calera Creek Flood Protection Improvements Project

The California Department of Fish and Wildlife (CDFW) has received your request to amend Lake or Streambed Alteration Agreement 1600-2013-0159-R3 (Agreement) and the required fee in the amount of $433.25 for a minor amendment. The minor amendment request was received by CDFW on May 14, 2018. On May 29, 2018, CDFW received a revised minor amendment request.

Your request to amend the Agreement includes modification to the original language on page 9, Avoidance and Minimization Measure (AMM) 2.8 Buffers. The request to amend AMM 2.8 is to allow construction flexibility of the flood protection project while maintaining protection for active bird nests.

CDFW hereby agrees to amend the Agreement as requested. All conditions in the Agreement and previous Amendments remain in effect.

Text proposed for insertion in AMM 2.8 is marked in **bold**.

From:

"A minimum 50-foot radius protective buffer zone shall be established around active nests except for raptors, herons, and egrets. A minimum 300-foot radius protective buffer zone shall be established around active nests for hawks, owls, herons, and egrets. Fencing of flagging shall be installed at the boundary of each protective buffer zone. All protective buffer zones shall be maintained, and no entrance shall be allowed into protective buffer zones, until the nest becomes inactive. If monitoring shows that disturbance of actively nesting birds is occurring, buffer widths shall be increased until monitoring shows that disturbance is no longer occurring. If this is not possible, work shall cease in the area until young have fledged and the nest is no longer active."

To:

"A minimum 50-foot radius protective buffer zone shall be established around active nests except for raptors, herons, and egrets. A minimum 300-foot radius protective buffer zone shall be established around active nests for hawks, owls, herons, and egrets. Fencing of flagging shall be installed at the boundary of each protective buffer zone. All protective buffer zones shall be maintained, and no entrance shall be allowed into protective buffer zones, until the nest becomes inactive. If monitoring shows that disturbance of actively nesting birds is occurring, buffer widths shall be increased until monitoring shows that disturbance is no longer occurring. If this is not possible, work shall cease in the area until young have fledged and the nest is no longer active.

Upon recommendation of the qualified biologist and with advance approval from CDFW, the Permittee may reduce the size of the buffer around active bird nests to 25 feet (except for hawks, owls, herons, and egrets) or other appropriate buffer distance to be in compliance with the Migratory Bird Treaty Act (MBTA) and Fish and Game Code 3503/3503.5. The qualified biologist shall monitor the nesting birds with the reduced-size buffer daily when construction is actively occurring in the vicinity and shall increase the buffer if the qualified biologist determines that the birds are showing signs of unusual or stressed behavior by project activities. Abnormal nesting behaviors which may cause reproductive harm include, but are not limited to, defensive flights/vocalizations directed towards project personnel, standing up from a brooding position, and flying away from the nest. The qualified biologist shall have authority to order the cessation of all nearby project activities if the nesting birds' exhibit abnormal behavior which may cause reproductive failure (nest abandonment and loss of eggs and/or young) until an appropriate buffer is established. The Permittee or qualified biologist shall contact CDFW immediately for further guidance if nesting birds show signs of disturbance and behavioral changes. The Permittee shall submit weekly monitoring reports prepared by the qualified biologist to CDFW while the reduced buffer is in effect."

Copies of the Agreement and this amendment must be readily available at project worksites and must be presented when requested by a CDFW representative or agency with inspection authority.

If you have any questions regarding this letter, please contact Mayra Molina, Environmental Scientist at (707) 944-5596 or by email at mayra.molina@wildlife.ca.gov.

Sincerely,

Craig J. Weightman, Environmental Program Manager

cc: California Department pf Fish and Wildlife
Lieutenant Heitzenrater
Warden Hampton

Revised May 29, 2018

FOR DEPARTMENT USE ONLY				
Date Received	Amount Received	Approved?	Date Approved	Expiration Date
May 14, 2018	433.25	☑ Yes ☐ No	June 5, 2018	December 31, 2018
Assigned to: Molina		Lt. Heitzenrater ; Wdn. Hampton		

REQUEST TO AMEND LAKE OR STREAMBED ALTERATION AGREEMENT

Complete EACH field and include all required enclosures. Attach additional pages, if necessary.

1. APPLICANT REQUESTING AMENDMENT

If the applicant is a business, agency, or utility, please include the name of the applicant's representative, who should be an employee of the applicant.

Name	James Manitakos		
Business/Agency	Santa Clara Valley Water District		
Mailing Address	5750 Almaden Expressway		
City, State, Zip	San Jose, CA 95118		
Telephone	(408)630-2833	Fax	
Email	jmanitakos@valleywater.org		

2. PROJECT INFORMATION

Project Name (as identified in the Final Agreement)	Lower Berryessa and Lower Calera creek Flood Protection Improvements Project
Agreement Number	1600-2013-0159-R3
Expiration Date	December 31, 2018

3. AMENDMENT REQUEST AND FEE

Check the applicable box below and refer to the current fee schedule to determine the appropriate amendment fee.

- A minor amendment is one that would not significantly modify the scope or nature of any project covered by the agreement or any measure included in the agreement to protect fish and wildlife resources, as determined by the Department, or an amendment to transfer the agreement to another entity by changing the name of the entity to the name of the transferee (see Cal. Code Regs., tit. 14, § 699.5, subd. (a)(10)).
- A major amendment is one that would significantly modify the scope or nature of any project covered by the agreement or any measure included in the agreement to protect fish and wildlife resources, or require additional environmental review, as determined by the Department (see Cal. Code Regs., tit. 14, § 699.5, subd. (a)(7)).

☑ Minor Amendment ☐ Major Amendment

Note: The Department is not required to determine whether an amendment is complete or otherwise process the amendment until the Department has received the correct fee.

4. AMENDMENT DESCRIPTION

A. Describe the amendment in detail
- Include any structures (e.g., rip-rap, culverts, or channel clearing) that will be placed, built, or completed in or near the stream, river, or lake.
- Specify the type and volume of materials that will be used.
- If water will be diverted or drafted, specify the purpose or use.

Enclose diagrams, drawings, plans, and/or maps that provide all of the following: site specific construction details; the dimensions of each structure and/or extent of each activity in the bed, channel, bank or floodplain; an overview of the entire project area (i.e., "bird's-eye view") showing the location of each structure and/or activity, significant area features, and where the equipment/machinery will enter and exit the project area.

The design of the permitted project has not changed. The district requests minor revision of Avoidance and Minimization Measure 2.8 - Buffers. The proposed change would add the following to the end of Measure 2.8:

"Upon recommendation of the qualified biologist and with advance approval from CDFW, the district may reduce the size of buffer around active bird nests to 25 ft (other than hawks, owls, herons, and egrets, which will have 300-foot buffers). The qualified biologist will monitor the reduced-size buffer daily when construction is actively occurring in the vicinity and will reinstate the full-size 50-ft buffer if the nesting birds are disturbed by the construction activities. The district will submit monitoring reports prepared by the qualified biologist to CDFW weekly while the reduced buffer is in effect."

The requested amendment would maintain protection for active bird nests, while adding construction flexibility. The amendment will enable more expeditious project construction; thereby reducing both the duration of project construction and duration of construction-period disturbance of aquatic and riparian habitat. The qualified biologist for the project believes that the reduced buffer would prevent disturbance of the nesting birds (see attached memorandum from the Qualified Biologist). The amendment would not result in new impacts or substantially increased environmental effects.

Continued on additional page(s)

B. Explain the reason(s) for the amendment request

The project area is a relatively narrow corridor and multiple active nests have occurred at the project area each year of construction. In some cases, the 50-ft nest buffers overlap to greatly hinder movement by construction equipment and vehicles, complicating and greatly delaying project construction. This is occurring this spring at the Abel Street Bridge, where multiple swallow nests have resulted in a combined buffer area that prevents movement of materials and equipment and construction activities under the bridge. The construction period for required channel improvements is limited to June 15 to October 15 and the nesting birds buffers will prevent construction from proceeding under the bridge and downstream (due to lack of channel access) for over half of the allowable construction period. The resulting shortened construction season (8 weeks or less depending on when the nests become inactive) is insufficient to complete the channel improvements in this reach. This will result in the need to dewater the channel for an additional year (or more) with resulting temporary impacts to aquatic habitat. Additionally, partially completed channel improvements will be left over the rainy season, and will be vulnerable to risks of damage if high creek flows occur.

☑ Continued on additional page(s)

5. SIGNATURE

I hereby certify that to the best of my knowledge the information in this amendment request ("request") is true and correct and that I am authorized to sign this request as, or on behalf of, the applicant. I understand that if any information in this request is found to be untrue or incorrect, the Department may suspend processing this request or suspend or revoke any draft or final Lake or Streambed Alteration Agreement issued pursuant to this request. I understand also that if any information in this request is found to be untrue or incorrect and the changes described in this request has already begun, I and/or the applicant may be subject to civil or criminal prosecution. I understand that this notification applies only to the project(s) described herein and that I and/or the applicant may be subject to civil or criminal prosecution for undertaking any project not described herein, unless the Department has been separately notified of that project in accordance with Fish and Game Code section 1602 or 1611.

Melanie Richardson
Signature of Applicant or Applicant's Authorized Representative

5-10-18
Date

Melanie Richardson
Print Name

Note: If approved, a copy of this form must be available at the work site with the original agreement.

Answer B Continued

The proposed amendment will provide flexibility needed to complete project construction in an expedited manner, minimizing the length of construction period impacts to habitat and enabling faster installation of mitigation plantings and restoration/enhancement of the creek habitat. The proposed amendment contains the following protections for active bird nests and would not result in new or substantially increased environmental effects:

1) The qualified biologist will recommend the reduced buffer based on their professional opinion that the reduced -size buffer will protect the active bird nests from harm.

2) The qualified biologist will monitor the reduced size buffer on a daily basis for signs that construction is disturbing the birds and will reinstate the 50-ft buffer is disturbance is observed.

3) The district will submit weekly reports prepared by the qualified biologist to CDFW.

CONDOR COUNTRY
CONSULTING, INC.

May 25, 2018

To whom it may concern:

I am writing to recommend a nesting bird buffer reduction at Lower Berryessa Creek Project Phase II in Milpitas, California. Currently our client, Brosamer & Wall (B&W) has begun construction within the Lower Berryessa Creek, on the upstream side of Abel Bridge. The presence of a large active Cliff swallow colony beneath the South side of Abel Street Bridge is limiting construction and is preventing certain construction activities from occurring.

The current nesting bird buffer at the west end of Abel Bridge, which is over Lower Berryessa Creek is currently affecting the following activities:

1) Installation of Creek Bypass/Dewatering system
2) Coffer Dam Installation/ U Frame Access Ramp
3) U-Frame Access Ramp
4) U-Frame Construction
5) FW11 construction from creek bottom upstream of the N Abel Street bridge

Along with the currently on-going activities, the existing 50' nesting bird buffer will also affect the following items scheduled to begin June 15th:

6) FW15 construction from creek bottom.
7) U-Frame construction under and downstream of N. Abel st. bridge.
8) Installation of Creek Bypass/Dewatering system under and downstream of N. Abel St. Bridge.

Flood retrofit activities have begun the first week of May and go to October 15th, the project completion date.

This colony has been well established for years, and B&W has implemented numerous measures to try to prevent the birds from nesting in this area including exclusion netting, visual deterrents, and daily removal of nest starts. However, the persistence of this colony is impressive. In the presence of loud machinery and personnel removing nest starts, these birds have continued nest construction on a daily basis.

These birds seem to have adapted completely to the urbanized setting. There are several weep holes beneath Abel Street Bridge that were inaccessible to the B&W crew, and therefore couldn't be covered with exclusion devices as all others were. These have all become occupied by nesting cliff swallows. The colony has completed mud nest construction on the central columns and bridge overhang, and has been laying eggs.

With this in mind, we advocate strongly for a buffer reduction in this area. It is clear that these birds will not be deterred by noisy machinery, human presence, active nest removal, or exclusion netting.

815 ESTUDILLO STREET • MARTINEZ • CA • 94553-1617
PHONE: (925)335-9308 • FAX: (925)231-0571
EMAIL: INFO@CONDORCOUNTRY.COM

Therefore it is likely that the presence of B&W personnel working in the creek beneath the colony will pose no danger or harassment to the birds, and therefore a buffer reduction is well within reason.

Please see the attached photos (1 & 2), depicting birds building nests within inches of B&W crew members removing the previous day's nest starts. A reduction of the buffer to 25 feet would allow this nesting colony to thrive unimpeded by human disturbance, and let B&W complete their work without incident.

Please let me know if you have any questions and thank you for your time.

Sincerely,

Sean Dexter
Principal
Condor Country Consulting, Inc.
Martinez, CA 94553
cell 510-612-8761
sean@condorcountry.com

Photo 1. B&W personnel removing nest starts. Arrows depict the swallow colony constructing nests within feet of this activity.

Photo 2. Red arrows represent covered weep holes covered, with no nests present within. Blue arrow shows inner-most weep hole, which was unreachable.

Photo 3. Of the four weep holes on this side of the pillars, only one is currently covered. The other three were left un-covered either due to the presence of nesting birds, or their inaccessibility. Currently, of the eight weep holes on this part of the bridge, four are covered, four are uncovered.

Attachment A
Abel Bridge
25'-0"
16'-0"

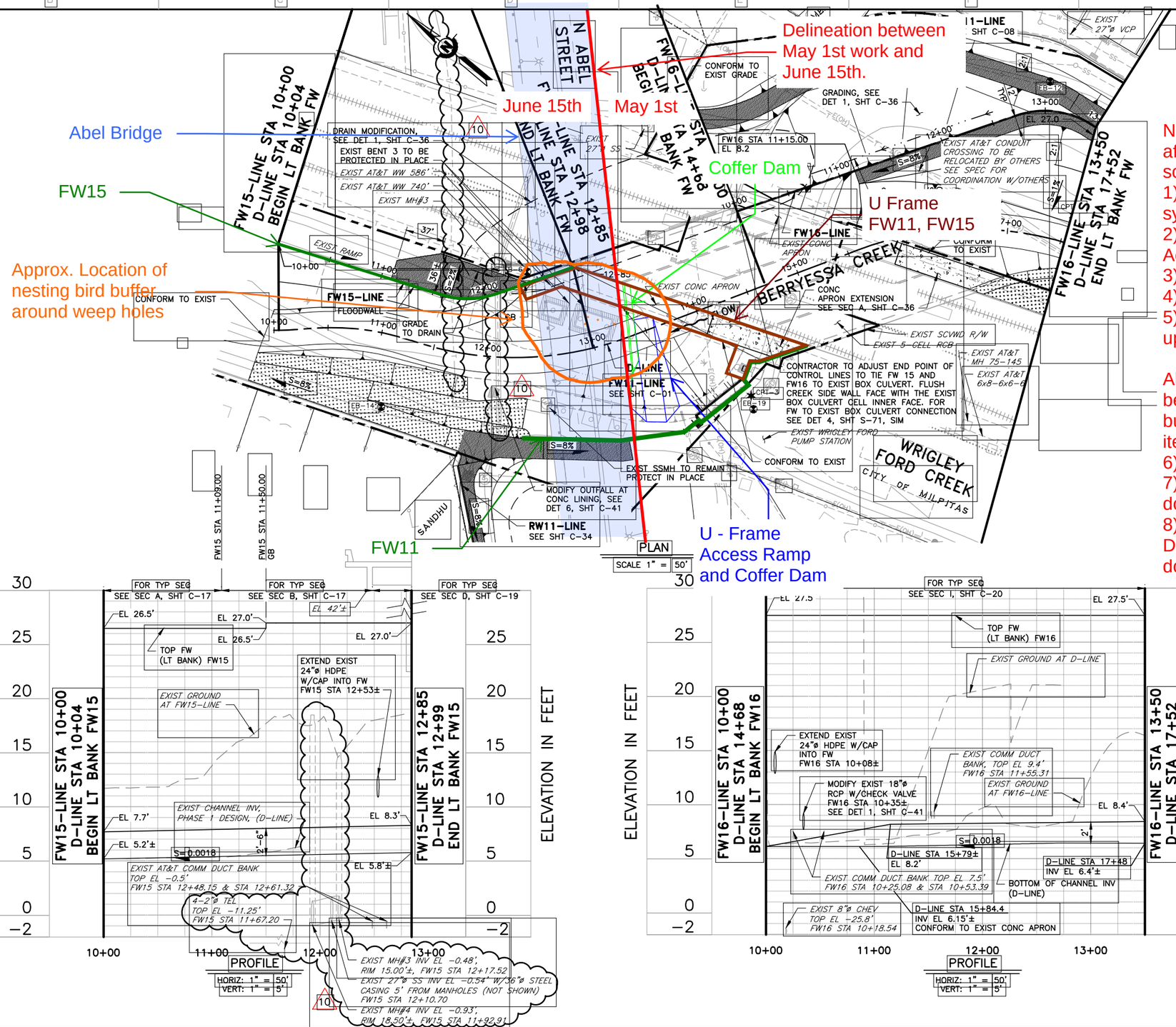

Notes: The current nesting bird buffer will affect the following items that are scheduled to begin May 1st:

1) Installation of Creek Bypass/Dewatering system
2) Coffer Dam Installation/ U Frame Access Ramp
3) U-Frame Access Ramp
4) U-Frame Construction
5) FW11 construction from creek bottom, upstream of Abel Bridge

Along with the activities scheduled to begin May 1st, the current nesting bird buffer will also affect the the following items scheduled to begin June 15th:

6) FW15 construction from creek bottom
7) U-Frame construction under and downstream of N. Abel st. bridge
8) Installation of Creek Bypass/ De-watering system under and downstream of N. Abel St. Bridge

REV	DESCRIPTION	DATE	APPR.
10	REVISION #10	04/18	YL

REVISED DRAWING 04-04-18

REFERENCE INFORMATION AND NOTES

1. AERIAL PHOTOGRAPHY WAS TAKEN JULY 2008.
2. LEFT AND RIGHT BANKS ARE VIEWED LOOKING UPSTREAM.
3. FOR FLOODWALL FOOTING ON PROFILE, SEE SHT X-X.
4. CONTRACTOR TO VERIFY LOCATION AND ELEVATION OF ALL EXISTING UTILITY LINES.

DATE 03-22-16 | DESIGN Y. LEE | DRAWN J. FORD | CHECKED G. LAU

ENGINEERING CERTIFICATION: SEE ORIGINAL "AS-BUILT" DOCUMENT FOR SIGNATURE AND DATE — PROJECT ENGINEER — DATE 3.22.2016

Santa Clara Valley Water District

PROJECT NAME AND SHEET DESCRIPTION:

LOWER BERRYESSA CREEK
FLOOD PROTECTION PROJECT PHASE II

PLAN AND PROFILE – LT BANK FW
FW15–LINE STA 10+00 TO STA 12+85
FW16–LINE STA 10+00 TO STA 13+50

SCALE: AS SHOWN — VERIFY SCALES 0 1" — BAR IS ONE INCH ON ORIGINAL DRAWING IF NOT ONE INCH ON THIS SHEET ADJUST SCALES ACCORDINGLY

PROJECT NUMBER: 40174005
SHEET CODE: C-07
SHEET NUMBER: 36 OF 150

DOCUMENT NUMBER: BER_CY-C-4017-55821

USERNAME: JENNFORD 4/5/2018 2:13 PM
FILENAME: K:\Active Projects\MP-40174005\Lower Berryessa Creek Project PHASE 2\SHEETS\REVISION 10\C-07.dwg

California Natural Resources Agency
DEPARTMENT OF FISH AND WILDLIFE
Bay Delta Region
7329 Silverado Trail
Napa, CA 94558
(707) 944-5500
www.wildlife.ca.gov

GAVIN NEWSOM, *Governor*
CHARLTON H. BONHAM, Director

March 7, 2019

James Manitakos
Santa Clara Valley Water District
5750 Almaden Expressway
San Jose, CA 95118

Dear Mr. Manitakos:

Amendment 4 of Lake or Streambed Alteration Agreement, Notification No. 1600-2013-0159-R3, Lower Berryessa and Lower Calera Creek Flood Protection Improvements Project

The California Department of Fish and Wildlife (CDFW) has received your request to amend Lake or Streambed Alteration Agreement 1600-2013-0159-R3 (Agreement) and the required fee in the amount of $1,493.00 for a major amendment. The amendment request was initially received by CDFW on November 30, 2018 as a minor amendment. On December 20, 2018, CDFW determined that the request warranted a major amendment. On February 4, 2019, CDFW received a revised major amendment request and the total fee paid in full.

Your request to amend the Agreement includes changes to the designs of the Lower Calera Creek element of the Project, in Reaches A and B.

For Reach A, the previous design plans included installing concrete headwalls on the existing Union Pacific Railroad (UPRR) and Valley Transportation Authority (VTA) light rail bridges, constructing a vertical concrete floodwall on the north side of the existing U-frame channel by four feet, constructing an 18-foot wide maintenance road on the south side of the U-frame surfaced with compacted aggregate, and constructing a vertical concrete floodwall south of the maintenance road. More recent structural analysis found that the existing U-frame is not competent to support the proposed raised walls, therefore, the U-frame must be replaced to increase capacity to pass 1% flow.

The redesigns for Reach A include the following: removing and replacing the existing 500-foot long concrete U-frame channel with a new concrete U-frame with the same wall height as the previous design but with the channel bottom elevation one foot lower; placing 1 foot of soil on the channel bottom of the U-frame to support vegetative growth; removing and replacing the channel access road and ramp on the south bank of the creek channel with a new structurally sound road/ramp; and installing a 10-foot tall headwall on an existing railroad bridge at the downstream end of the U-frame. The gradient, width and length of this channel reach will be unchanged from existing conditions, and it is expected that the soil placed on the channel bottom will be relatively stable and support vegetation growth.

Demolition of the U-frame will generate approximately 672 cubic yards (CY) of concrete debris that will be disposed of at a license offsite disposal area. Approximately 2,355 CY of concrete will be used to construct the new U-frame and adjoining retaining wall for the channel access road/ramp. The original design previously included 140 CY of concrete that was going to be placed within this reach.

The previous design plans for Reach B initially included demolishing an existing earthen levee on the north bank, widening the channel by approximately 25 ft, and constructing a new earthen levee with 2:1 side slopes topped with a vertical concrete floodwall; constructing a 5-foot wide pedestrian trail, surfaced with compacted aggregate, on the levee crest on the channel side of the floodwall; constructing a vertical concrete floodwall on the south bank levee as well as an 18-foot wide maintenance road surfaced with compacted aggregate; removing approximately 1,500 square feet (SF) of sacked concrete and replacing with the same amount with ¼ ton riprap; and installing headwalls on the existing North Milpitas Blvd and Arizona Ave. Bridges. Floodwall heights ranged from 2.5 ft to 6.5 ft above ground level (AGL) and the total length of floodwalls were 4,400 linear feet.

The redesigns for Reach B will include: reducing the length and increasing the heights of concrete floodwalls on both banks of the channel; removing approximately 3,600 SF of in-channel sacked concrete located upstream of the North Milpitas Blvd culvert and upstream and downstream of the Arizona Ave culvert; and replacing approximately 3,500 SF of rock riprap composed of ¼ ton rocks at the two culverts. The north bank floodwall length will be reduced by 570 ft and the south bank by 370 ft. The total floodwall length will be 3,460 ft. The floodwalls on the north bank will range in height from 5.0 to 9.0 ft AGL. On the south bank the floodwalls will range in height from 4.5 ft to 8.5 ft AGL. Headwall height for the upstream headwall at North Milpitas Blvd Bridge will be 9.3 ft and the downstream headwall will be 6.7 ft. For the Arizona Avenue Bridge, upstream headwall height will be 6.5 ft and the downstream headwall will be 6.2 ft.

The amount of concrete used to construct the floodwalls and footings in Reach B will decrease from 4,545 CY to approximately 3,902 CY and the floodwall footprint will decrease from approximately 0.76 acres (ac) to approximately 0.60 ac.

CDFW hereby agrees to amend the Agreement as requested. All conditions in the Agreement and previous Amendments remain in effect.

Copies of the Agreement and this amendment must be readily available at project worksites and must be presented when requested by a CDFW representative or agency with inspection authority.

If you have any questions regarding this letter, please contact Mayra Molina, Environmental Scientist at (707) 428-2067 or by email at Mayra.Molina@wildlife.ca.gov.

Sincerely,

4/12/19

Craig Weightman
Environmental Program Manager

cc: Mayra Molina, Environmental Scientist
Brenda Blinn, Senior Environmental Scientist (Supervisory)

ec: Susan Glendening
Regional Water Quality Control Board
susan.glendening@waterboards.ca.gov

ACKNOWLEDGEMENT

I hereby agree to the above-referenced amendment.

Print Name: Melanie Richardson Date: 3-25-19

Signature: Melanie Richardson

Notice of Determination

To:
Office of Planning and Research
For U.S. Mail:
P.O. Box 3044

Sacramento, CA 95812-3044

Street Address:
1400 Tenth Street
Sacramento, CA 95814

From:
Department of Fish and Wildlife
Bay Delta Region
2825 Cordelia Road, Suite 100
Fairfield, CA 95434
Contact: Mayra Molina
Phone: (707) 428-2067

Lead Agency
Santa Clara Valley Water District (Valley Water)
5750 Almaden Expwy, San Jose, CA 95118
Contact: James Manitakos
Phone: (408) 630-2833

SUBJECT: ***Filing of Notice of Determination pursuant to Public Resources Code section 21108***

State Clearinghouse Number: 2007092084

Project Title: Major Amendment No.4 Lower Berryessa and Lower Calera Creek Flood Protection Improvements Project (Lake or Streambed Alteration Agreement No. 1600-2013-0159-R3)

Project Location: Lower Calera Creek Reaches A and B begin from the Union Pacific Railroad to Arizona Avenue in the City of Milpitas, County of Santa Clara, State of California.

Project Description: The California Department of Fish and Wildlife (CDFW) has executed the Major Amendment No. 4 for the Lake and Streambed Alteration Agreement number 1600-2013-0159-R3, pursuant to section 1602 of the Fish and Game Code to the project Applicant, Melanie Richardson, Santa Clara Valley Water District.

The overall project includes creek channel improvements that will result in the containment of flow in the channel with adequate freeboard requirements in Lower Berryessa and Lower Calera Creeks. This NOD is limited to the redesigns in Lower Calera Creek and include; removal and replacement of a concrete U-frame channel with a new one, placement of 1-foot of sediment on the channel bottom, replacement of a channel access road and ramp, installation of headwalls, reducing the length and increasing the heights of concrete floodwalls, and removing sacked concrete and replacing with rock riprap.

This is to advise that CDFW, acting as a Responsible Agency, approved the above described project on April 12, 2019 and has made the following determinations regarding the project pursuant to California Code of Regulations section 15096, subdivision (i):

1. The project ☐ will / ☒ will not have a significant effect on the environment. This determination is limited to effects within CDFW's permitting jurisdiction as a Responsible Agency.
2. CDFW considered the environmental impact report prepared by the Lead Agency for this project pursuant to California Code of Regulations section 15096, subdivision (f).
3. Mitigation measures ☒ were / ☐ were not made a condition of CDFW's approval of the project.
4. A mitigation reporting or monitoring plan ☒ was / ☐ was not adopted by CDFW for this project.
5. A statement of overriding considerations ☐ was / ☒ was not adopted by CDFW for this project.
6. Findings ☐ were / ☒ were not made by CDFW pursuant to California Code of Regulations section 15091.

The final environmental impact report prepared for the project is available to the general public at the office location listed above for the Lead Agency. CDFW's record of project approval as Responsible Agency is available at CDFW's regional office.

Signature _____ *Date: April 12, 2019*

Craig J. Weightman, Environmental Program Manager

Date Received for filing at OPR: _____

California Natural Resources Agency
DEPARTMENT OF FISH AND WILDLIFE
Bay Delta Region
2825 Cordelia Road, Suite 100
Fairfield, CA 94534
(707) 428-2002
www.wildlife.ca.gov

EDMUND G. BROWN, Jr., Governor
CHARLTON H. BONHAM, Director

November 13, 2018

Melanie Richardson
Santa Clara Valley Water District
5750 Almaden Expressway
San Jose, CA 95118

Dear Melanie Richardson:

Extension of Lake or Streambed Alteration Agreement, Notification No. 1600-2013-0159-R3, Lower Berryessa and Lower Calera Creek Flood Protection Improvements Project

The California Department of Fish and Wildlife (CDFW) received your request to extend Lake or Streambed Alteration Agreement (Agreement) and extension fee, for the above referenced agreement. CDFW hereby grants your request to extend the Agreement expiration from December 31, 2018 to December 31, 2022. All other conditions in the original Agreement remain in effect.

Copies of the original Agreement and this letter must be readily available at project worksites and must be presented when requested by a CDFW representative or other agency with inspection authority.

If you have any questions regarding this letter, please contact Mayra Molina, Environmental Scientist at (707) 428-2067 or by email at Mayra.Molina@wildlife.ca.gov.

Sincerely,

Brenda Blinn
Senior Environmental Scientist (Supervisory)
Bay Delta Region

cc: California Department of Fish and Wildlife
Lieutenant Heitzenrater

FOR DEPARTMENT USE ONLY				
Date Received	Fee Enclosed	Approved?	Date Approved	Expiration Date
10-18-2018	$ 578.25	☑ Yes ☐ No		12-31-2022

STATE OF CALIFORNIA
DEPARTMENT OF FISH AND WILDLIFE

Molina
Lt. Heitzenrater

REQUEST TO EXTEND
LAKE OR STREAMBED ALTERATION AGREEMENT

Complete EACH field and attach additional pages if necessary. Please refer to the fee schedule and submit the correct fee with extension request.

1. APPLICANT REQUESTING EXTENSION

If the applicant is a business, agency, or utility, please include the name of the applicant's representative, who should be an employee of the applicant.

Name	Melanie Richardson		
Business/Agency	Santa Clara Valley Water District		
Street Address	5750 Almaden Expressway		
City, State, Zip	San Jose, CA 95118		
Telephone	408-630-2035	Fax	
Email	mrichardson@valleywater.org		

Fish & ...
OCT 18 2018

2. PROJECT INFORMATION

Agreement number	1600-2013-0159-R3
Original expiration date	December 31, 2018
New expiration date requested	December 31, 2021

Specify: 1) the work that has been completed; 2) the work that needs to be completed; and 3) the amount of time needed to complete the work.

1) Work Completed: Civil construction and installation of mitigation plantings in Reaches A and B of Lower Berryessa Creek Element. Civil construction and partial installation of mitigation plantings in Reaches C through G of Lower Berryessa Creek Element.

2) Work to be Completed; Installation of remaining mitigation plantings in Reaches C and D of Lower Berryessa Creek Element. Civil construction and installation of mitigation plantings in Reaches A and B of Lower Calera Element.

☐ Continued on additional page(s)

2. PROJECT INFORMATION, continued.

Specify the reason(s) for the extension request

Construction and revegetation activities have taken longer than expected due to:

- need to relocate previously unidentified underground utility lines
- need for extensive coordination with the Valley Transportation Agency and Union Pacific Railroad concerning construction in proximity to active railroad lines, and
- need to establish buffer zones around a number of active bird nests.

☐ Continued on additional page(s)

Note: The Department may not process this extension request until the extension fee has been received.

3. SIGNATURE

I hereby certify that to the best of my knowledge the information in this extension request ("request") is true and correct and that I am authorized to sign this request as, or on behalf of, the applicant. I understand that if any information in this request is found to be untrue or incorrect, the Department may suspend processing this request. I understand also that if any information in this request is found to be untrue or incorrect, I and/or the applicant may be subject to civil or criminal prosecution.

Melanie Richardson
Signature of Applicant or Applicant's Authorized Representative

10-15-18
Date

Melanie Richardson
Print Name

Note: If approved, a copy of this form must be available at the work site with the original agreement.

THIS PAGE INTENTIONALLY LEFT BLANK

United States Department of the Interior

FISH AND WILDLIFE SERVICE
Washington, Washington, D C 20240

MBPM-2
Date: APR 15, 2003

MIGRATORY BIRD PERMIT MEMORANDUM

SUBJECT: Nest Destruction

PURPOSE: The purpose of the memorandum is to clarify the application of the Migratory Bird Treaty Act (MBTA) to migratory bird nest destruction, and to provide guidance for advising the public regarding this issue.

POLICY: The MBTA does not contain any prohibition that applies to the destruction of a migratory bird nest alone (without birds or eggs), provided that no possession occurs during the destruction. To minimize MBTA violations, Service employees should make every effort to inform the public of how to minimize the risk of taking migratory bird species whose nesting behaviors make it difficult to determine occupancy status or continuing nest dependency.

The MBTA specifically protects migratory bird nests from ***possession, sale, purchase, barter, transport, import,*** and ***export,*** and ***take.*** The other prohibitions of the MBTA – ***capture, pursue, hunt,*** and ***kill*** – are inapplicable to nests. The regulatory definition of ***take,*** as defined by 50 CFR 10.12, ***means to pursue, hunt, shoot, wound, kill, trap, capture, or collect, or attempt*** *to pursue* ***hunt, shoot, wound,*** *kill,* ***trap, capture, or collect.*** Only ***collect*** applies to nests.

While it is illegal to collect, possess, and by any means transfer possession of any migratory bird nest, the MBTA does not contain any prohibition that applies to the destruction of a bird nest alone (without birds or eggs), provided that no possession occurs during the destruction. The MBTA does not authorize the Service to issue permits in situations in which the prohibitions of the Act do not apply, such as the destruction of unoccupied nests. (Some unoccupied nests are legally protected by statutes other than the MBTA, including nests of threatened and endangered migratory bird species and bald and golden eagles, within certain parameters.)

However, the public should be made aware that, while destruction of a nest by itself is not prohibited under the MBTA, nest destruction that results in the unpermitted take of migratory birds or their eggs, is illegal and fully prosecutable under the MBTA.

Due to the biological and behavioral characteristics of some migratory bird species, destruction of their nests entails an elevated degree of risk of violating the MBTA. For example, colonial nesting birds are highly vulnerable to disturbance; the destruction of unoccupied nests during or near the nesting season could result in a significant level of take. Another example involves

ground nesting species such as burrowing owls and bank swallows, which nest in cavities in the ground, making it difficult to detect whether or not their nests are occupied by eggs or nestlings or are otherwise still essential to the survival of the juvenile birds. The Service should make every effort to raise public awareness regarding the possible presence of birds and the risk of violating the MBTA, the Endangered Species Act (ESA), and the Bald and Golden Eagle Protection Act (BGEPA), and should inform the public of factors that will help minimize the likelihood that take would occur should nests be destroyed (i.e., when active nesting season normally occurs).

The Service should also take care to discern that persons who request MBTA permits for nest destruction are not targeting nests of endangered or threatened species or bald or golden eagles, so that the public can be made aware of the prohibitions of the ESA and the BGEPA against nest destruction.

In situations where it is necessary (i.e., for public safety) to remove (destroy) a nest that is occupied by eggs or nestlings or is otherwise still essential to the survival of a juvenile bird, and a permit is available pursuant to **50** CFR parts 13 and 21, the Service may issue a permit to take individual birds.

Steve Williams

Director

October 10, 2014
CIWQS Place No. 768945 (MB)
CIWQS Regulatory Measure No. 397588

Sent via electronic mail: No hardcopy to follow

Santa Clara Valley Water District
5750 Almaden Expressway
San Jose, CA 95118

Attention: Melanie Richardson
Email: MRichardson@valleywater.org

Subject: Amended Conditional Water Quality Certification for Lower Berryessa Creek and Lower Calera Creek Flood Improvement Project, City of Milpitas, Santa Clara County,

Dear Ms. Richardson:

The Regional Water Board has reviewed the application materials submitted by the Santa Clara Valley Water District (District) for the proposed Lower Berryessa Creek and Lower Calera Creek Flood Improvement Project (Project) located in Santa Clara County. The District has applied to the U.S. Army Corps of Engineers (ACOE) Regulatory Branch for (1) a Nationwide Permit to discharge dredge and fill materials to waters of the United States pursuant to Section 404 of the Clean Water Act (CWA) (33 U.S.C. 1344) and (2) to place structures and work in navigable waters pursuant to Section 10 of the Rivers and Harbors Act of 1899 (RHA) (33 U.S.C. 320.2). We have determined that the Project, as proposed, will not violate State water quality standards, and accordingly issue conditional CWA Section 401 water quality certification (Certification) for the Project.

The Applicant submitted an application dated June 5, 2013. The Regional Water Board issued incomplete application letters and requested additional information on June 26, 2013, March 5, 2014, and May 30, 2014. The District provided supplemental information, which was received on February 7, 2014, May 1, 2014, and July 17, 2014, at which time the application was determined to be complete and acceptable. The following Project description is summarized from the application materials received on June 5, 2013, and supplemental information (collectively referred to as the Application).

Project Location and Site Description

The Project's approximately 11,760 linear feet fall entirely within a developed portion of the City of Milpitas in Eastern Santa Clara County (Figure 2 – attached). The two primary creeks in the Project area, the Lower Berryessa and Lower Calera Creeks, and small sections of the Lower Penitencia and Tularcitos creeks within the Project area, are managed earthen flood control channels with the exception of a few sections that have existing hardscape erosion control and concrete bed linings. The Project area is tidally

influenced up to the Abel Street Bridge on Lower Berryessa Creek and up to the Southern Pacific Railroad Bridge on Lower Calera Creek.

Project Purpose
The Project will provide flood protection from the 100-year flood event, improve access for creek maintenance, improve habitat functions, and provide opportunities to incorporate the City of Milpitas trail system on the levees along a total of 11,760 linear feet of stream channel including 8,820 linear feet of Lower Berryessa Creek, 2,835 linear feet of Lower Calera Creek, 75 linear feet of Tularcitos Creek, and 30 linear feet of Lower Penitencia Creek.

Project Description
The District proposes to increase flood protection capacity, which includes (1) restructuring or removing existing levees to widen the channel cross-section, (2) constructing instream benches for riparian habitat; (3) constructing floodwalls, and (4) reducing the number of maintenance roads. Additional activities include constructing new or modifying existing concrete headwalls, bridge footings, and/or aprons. The Project details for each creek are described below. Lower Berryessa Creek is a managed trapezoidal flood control channel consisting of mostly earthen material with the exception of a 210-foot long concrete-lined section at the confluence with Tularcitos Creek and a 700-foot long concrete lined section at Abel Street. The proposed Project for Lower Berryessa Creek includes restructuring or removing existing levees and constructing floodwalls to widen the creek cross section, constructing instream riparian benches, and reducing the maintenance roads from four to two along 8,000 linear feet of the creek. This Project element also includes a 30 linear foot segment of Penitencia Creek and a 75 linear foot segment of Tularcitos Creek at its confluence with Lower Berryessa Creek where modifications to existing structures as described further below will occur to accommodate the rest of the Project.

Levees and Floodwalls: To increase the flood conveyance capacity of the Lower Berryessa Creek, the District proposes to restructure or remove levees and construct floodwalls. The levee along the northeast side of the Lower Berryessa Creek will be raised up to 12 feet along the entire length of the creek, with the exception of the section at the Southern Pacific Railroad Bridge where both levees will be replaced with floodwalls. The levee along the southwest side of the creek will be lowered or removed and replaced with floodwalls between 6 and 19 feet high. Concrete floodwalls will be constructed on both sides of Lower Berryessa Creek at the Able Street location and the confluence of Lower Berryessa and Tularcitos Creeks.

An instream bench up to 30-feet wide will be constructed on the inboard side of the levee to facilitate the creation and maintenance of a low-flow channel in Lower Berryessa Creek. Three separate sections of bench approximating 3,120 linear feet will be planted with native riparian vegetation to provide habitat value to the Lower Berryessa Creek. Rock riprap will be partially buried in the toe of the creek bottom below the benches to protect the bench and the riparian habitat from erosion. Vegetation will also be planted adjacent to and between the buried rock. In addition, Lower Berryessa Creek will be graded in areas adjacent to the low-flow channel to accommodate wetlands creation through installation of plants/seeds/cuttings.

Additional activities related to the levees and floodwalls include the following:

1. Approximately 200 linear feet of riprap will be placed on the Lower Berryessa Creek at the confluence of Calera creek including 50 linear feet of in-kind rock riprap replacement and an additional 150 linear feet of new rock riprap.
2. The existing outfall structure of the pump station near Hidden Lakes that discharges water from the pump station into Lower Berryessa Creek will be modified. Currently, the outfall pipes discharge perpendicular to the creek causing erosion of the opposite bank. When the levee is restructured, the outfall pipe extensions will be angled downstream. The existing bed of the discharge pool at this location is armored with riprap, which will be removed. The sacked concrete bags surrounding the outfall will be replaced with grouted riprap within a smaller area.

Maintenance Road: The maintenance roads will be reduced from four to two, with one on either side of the creek, and widened to 18 feet to improve maintenance access. One maintenance road will be constructed on the raised levee (upper maintenance road) and the other will be constructed adjacent to the floodwall (lower maintenance road). The upper maintenance road will have a surface material of asphalt and also serve as a pedestrian/bicycle trail. Approximately 8,100 linear feet of the lower maintenance road will have a surface material of pre-fabricated cellular concrete mats (CCM) inboard of the floodwall. The lower maintenance road will have four 40-70 foot long by 15 foot wide turnout to accommodate large equipment.

Bridge Crossings: The City of Milpitas Pedestrian Bridge will be raised to accommodate the design capacity. The Abel Street Bridge, North Milpitas Boulevard Bridge, and Hillview Drive Bridge will remain at the existing elevation and headwalls will be constructed or modified to accommodate the design capacity. Access ramps to the lower maintenance road will be constructed at North Abel Street, North Milpitas Boulevard, North Hillview Drive, and the pedestrian bridge.

The proposed Project for Lower Calera Creek includes restructuring or removing existing levees and constructing concrete floodwalls to widen the creek cross section, and constructing maintenance roads on both sides of the creek. Lower Calera Creek is divided into two reaches, A and B. Reach A is a concrete U-Frame channel that begins at the Southern Pacific Railroad (confluence with Lower Berryessa Creek) and extends upstream approximately 470 feet to North Milpitas Boulevard. Reach B is a managed earthen trapezoidal channel that extends 2,300 linear feet from North Milpitas Boulevard to the concrete drop structure behind the North Milpitas High School.

Levee and Floodwalls: In Reach A, floodwalls up to 4 feet in height will be constructed on either side of the existing concrete U-frame structure, which will be retained in its existing conditions. In Reach B, the north levee will be removed and the south levee will be slightly lowered with a 2:1 side slope. Concrete floodwalls will be constructed on both sides of the creek, ranging in height from 2 to 5 feet on the north side, and 3 to 6.5 feet on the south side.

In addition, Lower Calera Creek will be graded in areas adjacent to the low-flow channel to accommodate wetlands creation through installation of plants/seeds/cuttings.

Maintenance Road: A new maintenance road will be constructed on the outboard side along the U-frame channel in Reach A. In Reach B, a new 18-ft wide maintenance road

on the top of the south bank and a new 5-ft wide maintenance trail on the top of the north bank will replace existing levee crest roads. The maintenance roads will have a surface material of compacted aggregate.

Bridge Crossings: Three bridge crossings (Union Pacific Railroad, Milpitas Boulevard, and Arizona Avenue) will remain at the existing elevation and new headwalls will be constructed at upstream side of North Milpitas Boulevard and both upstream and downstream sides of the railroad crossing and Arizona Avenue. New access ramps at each crossing will be constructed.

Dewatering: Each reach scheduled for instream construction will be dewatered if water is present. During dewatering, water flowing in the creek, including seepage from groundwater, and discharge water from storm drains, will be diverted via pipes around the active construction reach, and returned to the creek channel at a location downstream from the construction reach. Best management practices (BMPs) will be implemented to avoid and minimize impacts to water quality, and the quality of water returned to the creek will be tested and monitored to ensure the effectiveness of the BMPs. At the end of each construction season, the cofferdams will be removed the dewatered, sections of the creek will be re-watered and the habitat restored. Dewatering as well as monitoring and treatment process of diverted water will be implemented in accordance with Dewatering Plan as described in the Construction within the Lower Berryessa Creek Channel, dated June 10, 2014, (attached).

Staging: Staging of construction and temporary storage of materials, vehicles, and equipment will occur at three areas and include (1) Milpitas High School (Calera Creek); (2) north side of Calera Creek at Abel Street and Hanson Court; and (3) south side of Abel Street (between Abel Street and residences on Conventry Way). The staging area at the south side of Abel Street has a 0.015 acre jurisdictional wetland located at the farthest northeastern section of the area. All construction staging will occur outside of the creek and outside of the jurisdictional wetlands area. To ensure no impacts to the wetlands occur, the District will install a temporary fence between the wetlands and the equipment and materials storage area. Staging areas will be returned to pre-existing conditions after work is complete. No direct or indirect impacts to the 0.015-acre wetlands or associated habitat should result.

Impacts

The San Francisco Bay Basin Water Quality Control Plan (Basin Plan) defines the beneficial uses of waters of the State. The Project will impact Lower Berryessa Creek, Lower Calera Creek, Lower Penitencia Creek, and Tularcitos Creek. The Basin Plan assigns the following beneficial uses to all four creeks: Warm Freshwater Habitat (WARM), Wildlife Habitat (WILD), Water Contact Recreation (REC-1), Noncontact Water Recreation (REC-2), and Navigation (NAV).

The Project will permanently fill approximately 300 linear feet (0.20 acres) of waters of the State due to the placement of new rock riprap and concrete . The Project will temporarily disturb a total of 23,380 linear feet (10.58 acres) of waters of the State including 5.21 acres of jurisdictional wetlands (4.0 acres of tidal brackish marsh and 1.21 acres of freshwater marsh), 1.20 acres of riparian/upland woody vegetation, and 4.17 acres of open water (3.10 acres of non-tidal water and 1.07 acres of tidal water). An

additional 9,875 linear feet (16.83 acres) of ruderal annual grassland habitat will be temporarily disturbed due to grading activities.

The Project will result in the excavation of approximately 205,250 cubic yards of soil and fill of approximately 193,050 cubic yards of soil, rock riprap, and concrete. Approximately 50 linear feet of rock riprap will be replaced in-kind and 150 linear feet of new riprap will be installed. Approximately 160 linear feet of new concrete will be installed for bridge footings and west bank protection of the maintenance road upstream of Abel Street. Approximately 3,100 linear feet of rock riprap will be buried in the toe of the creek and vegetation planted within the openings between the rocks.

Mitigation
To mitigate for the permanent fill of approximately 431 linear feet (0.21 acres) and temporary disturbance of 23,380 linear feet (10.58 acres) of waters of the State, the District will mitigate in accordance with the Habitat Mitigation Monitoring Plan for the Lower Berryessa Creek Program Elements: Lower Berryessa Creek and Lower Calera Creek, dated June, 2014, revised July 2014 (HMMP) (attached) and as summarized below.

Wetlands
Approximately 5.21 acres of brackish and freshwater/seasonal wetlands habitat will be restored and 1.15 acres of brackish and freshwater/seasonal wetlands habitat will be created through active planting and adaptive management of wetland areas located between the low-flow channel and the toe of the reconstructed levees. At each creek reach, replanting will occur in the same year as channel construction activities, to limit the duration of the temporary impacts to wetlands.

Immediately after each creek reach is dewatered, wetlands plants and soil will be salvaged from the active creek reach. Existing perennial wetland plants will be salvaged first, making sure to harvest all rhizomes and root mass. The plant material will be kept moist at the staging area, so that roots and rhizomes do not dry out. The uppermost 6 to 12 inches of topsoil will be salvaged from existing wetlands and stored at the construction staging areas for re-use at the site, to the extent practicable.

Native perennial wetland vegetation from container stock, and local cuttings, to supplement the salvaged plants from the creek and topsoil seed bank will be actively planted in the wetland areas. Container stock will be obtained from local native plant nurseries or contract harvested and grown by a local nursery utilizing seed and propagules from the Coyote Creek watershed. The re-vegetation areas within the newly constructed creek reaches will be planted and adaptively managed to promote restoration of habitat, including a 22% increase in area of wetlands habitat compared to existing area.

Riparian
At least 2.32 acres of instream native riparian vegetation will be planted to create a new high-value riparian habitat atop three instream earthen benches along Lower Berryessa Creek. Project construction will also result in a 1.12-acre net increase in native riparian habitat through the creation and planting of low earthen benches within the widened creek of Lower Berryessa Creek at locations identified in the following table.

Area	Reach	Station Locations	Length (linear feet)	Bench Width	Low Bench Footprint Areas	
					Ft^2	Acres
1	D	34+00 to 53+83	1,983	30	59,490	1.25
2	D,E	59+04 to 70+74	1,170	30	35,100	0.80
3	G	74+00 to 78+00	400	30	12,000	0.27
Total Length of Low Bench Riparian			**3,553 feet**			
Total Area of Low Bench Riparian			**100,942 Ft^2 (2.32 Acres)**			

The instream benches will be constructed at an elevation of 1 to 2 feet above the low-flow water surface in close proximity to the low-flow channel. Each bench will be stabilized with a combination of jute netting covering the surface of the benches and ½ ton rock riprap at the perimeter of the benches. The rock riprap will form an erosive barrier at the inner edge of the benches and will anchor the jute netting, therefore reducing the potential for erosion of the benches. Rock riprap will also be placed at the stream-side perimeter of the riparian benches and buried in the creek bottom to a depth of at least one-half the rock's diameter. Riparian vegetation will be planted and maintained adjacent to and between the partially buried rocks.

Open Water
The temporarily dewatered reaches will be re-watered upon completion of each reach by removing the dewatering system and restoring flows in the creek.

Ruderal/Upland Habitat
The upland areas will be hydroseeded with native seeds to restore upland grass habitat. Best Management Practices to avoid and minimize adverse impacts during construction, as identified in the Application materials, will be implemented to prevent adverse effects on water quality. In addition, the District will conduct daily water quality testing in accordance with the HMMP.

(Continued on page 7)

Project Impacts and Proposed Compensatory Mitigation				
Habitat/Parameter	Lower Berryessa Element	Lower Penitencia / Tularcitos Creek	Lower Calera	Overall Project
Instream Wetlands				
Permanent Impact				
Linear feet	300	0	0	**300**
acres	0.2	0	0	**0.2**
Temporary Impact				
Linear feet	7,600	75	2,000	**9,675**
acres	4.61	0.03	0.57	**5.21**
Mitigation				
Linear feet	7,800	75	2,000	**9,875**
acres	5.13	0.03	1.2	**6.36**
Riparian				
Impact				
Linear feet	1,900	0	0	**1,900**
acres	1.2	0	0	**1.2**
Mitigation				
Linear feet	3,000	0	0	**3,000**
acres	2.32	0	0	**2.32**
Open Water				
Impact				
Linear feet	8700	105	3000	**11,805**
acres	3.64	0.05	0.48	**4.17**
Mitigation				
Linear feet	8700	105	3000	**11,805**
acres	3.64	0.05	0.48	**4.17**
Ruderal Grasses				
Impact				
Linear feet	7,700	75	2,100	**9,875**
acres	14.79	0.03	2.01	**16.83**
Mitigation				
Linear feet	20.5	75	2,100	**9,975**
acres	20.5	0.03	1.68	**22.21**

CEQA Compliance: The District as lead agency submitted an endorsed Notice of Determination, dated December 15, 2011, indicating that a Final Environmental Impact Report was prepared and approved in compliance with the California Environmental Quality Act (CEQA), (Project State Clearinghouse Number 2007 092 084).

EcoAtlas: It has been determined through regional, state, and national studies that tracking of mitigation/restoration projects must be improved to better assess the performance of these projects, following monitoring periods that last several years. In addition, to effectively carry out the State's Wetlands Conservation Policy of no net loss to wetlands, the State needs to closely track both wetland losses and mitigation/restoration project success. Therefore, we require that the District use the

California Wetlands Form to provide Project information related to impacts and mitigation/restoration measures (see Condition No. 16 of this Certification). An electronic copy of the form and instructions can be downloaded at: http://www.waterboards.ca.gov/sanfranciscobay/certs.shtml. Project information concerning impacts and mitigation/restoration will be made available at the web link: http://www.ecoatlas.org/regions/ecoregion/bay-delta/projects

Certification: I hereby issue an order certifying that any discharge from the referenced Project will comply with the applicable provisions of Sections 301 (Effluent Limitations), 302 (Water Quality Related Effluent Limitations), 303 (Water Quality Standards and Implementation Plans), 306 (National Standards of Performance), and 307 (Toxic and Pretreatment Effluent Standards) of the Clean Water Act, and with other applicable requirements of State law. This discharge is also regulated under State Water Resources Control Board Order No. 2003 - 0017 - DWQ, "General Waste Discharge Requirements for Dredge and Fill Discharges That Have Received State Water Quality Certification" which requires compliance with all conditions of this Water Quality Certification. The following conditions are associated with this certification:

1. The Project shall be constructed in conformance with the Project description provided in the approved Application materials. Any changes to Project design must receive Regional Water Board Executive Officer approval before the changes are implemented.

2. Disturbance or removal of vegetation shall be minimized. The site shall be stabilized through incorporation of appropriate BMPs, including the successful reestablishment of native vegetation, to enhance wildlife habitat values, and to prevent and control erosion and sedimentation.

3. No debris, soil, creosote treated wood, cement, concrete, or washings thereof, oil or other petroleum products, or any other unauthorized construction related materials or wastes shall be allowed to enter into or be placed where it may be washed by rainfall or runoff into waters of the State. When operations are completed, any excess material shall be removed from the work area and any areas adjacent to the work area where such material may be washed into waters of the State.

4. No equipment shall be operated in stream channels or other waters where there is flowing or standing water. No fueling, cleaning, or maintenance of vehicles or equipment shall take place within any areas where an accidental discharge to waters of the State may occur.

5. This certification does not allow for the take, or incidental take, of any special status species. The District shall use the appropriate protocols, as approved by the California Department of Fish and Wildlife, U.S. Fish and Wildlife Service, and/or National Marine Fisheries Service to ensure that Project activities do not impact the Beneficial Use of the Preservation of Rare and Endangered Species.

6. Construction is restricted to the period May 1 to October 15 in non-tidally influenced reaches and June 15 to October 15 in tidally influenced reaches.

Temporary extensions of this work period may be granted after October 15 contingent upon favorable weather forecasts and approval by the Regional Water Board Executive Officer, with the concurrence of the applicable resource agencies.

7. Concrete used in the Project shall be allowed to completely cure (a minimum of 28-days) or be treated with a CDFW-approved sealant before it comes into contact with flowing water.
8. The District shall implement water quality monitoring as described in the Habitat Mitigation Monitoring Plan for the Lower Berryessa Creek Program Elements: Lower Berryessa Creek and Lower Calera Creek, dated June 2014, as revised July 2014 (attached). Any changes to the water quality monitoring plan must receive Regional Water Board Executive Officer approval before the changes are implemented.
9. The District shall implement dewatering and rewatering activities for each creek reach as described in the Dewatering Plan. Any changes to the Dewatering Plan must receive Regional Water Board Executive Officer approval before the changes are implemented.
10. A minimum of 60 days prior to implementing revegetation activities in each reach, the District shall submit 100% revegetation design plans and specifications acceptable to the Regional Water Board Executive Officer. The 100% revegetation design plans and specifications shall include at a minimum the following information:
    a. Soil salvage plans and drawings;
    b. Salvaged soil spreading plans and drawings;
    c. Planting area layout plans and drawings;
    d. Species palette;
    e. Planting densities;
    f. Sources of plant materials for propagation and installation;
    g. Container plant installation specifications;
    h. Planting area maintenance specifications;
    i. Temporary soil erosion control measures.
11. Mitigation areas shall be monitored for a minimum of five years, or longer if necessary, until the mitigation success criteria as specified in Section 5.1 of the HMMP is achieved. Annual Reports shall be submitted acceptable to the Regional Water Board Executive Officer no later than January 31 following each mitigation monitoring period until the mitigation habitat has been successfully established. The Annual Reports shall describe each year's monitoring results, compare these results to the previous years' monitoring results and annual success criteria, and describe progress made towards meeting the approved final success criteria. If annual performance criteria are not met, the Annual Reports shall identify remedial actions that will be implemented to achieve the mitigation success criteria. The annual mitigation

monitoring and reporting activities, and remedial actions as necessary, shall continue until the approved mitigation success criteria are achieved. In the event that it is determined that the proposed success criteria cannot be achieved in a mitigation area, an alternative mitigation plan shall be proposed acceptable to the Regional Water Board Executive Officer to supplement/compensate for the failed mitigation.

12. Once the mitigation habitat is successfully established, a comprehensive final mitigation monitoring report shall be submitted acceptable to the Regional Water Board Executive Officer documenting that the mitigation habitat has achieved the final mitigation success criteria. At a minimum, the final mitigation monitoring report shall include: a description of the results of the final year's monitoring results, including submittal of the botanical and hydrologic data collected, representative photographs of the mitigation areas, corresponding maps, and a comparison of the final year's monitoring data to the final mitigation success criteria.

13. Annual Construction Status Reports shall be submitted acceptable to the Regional Water Board Executive Officer by April 1 of each year construction is planned. The Construction Status Reports shall include the following information: (1) a summary of the year's planned construction activities for each reach; (2) identification of any reaches that will require dewatering; (3) the results of soil characterization and whether imported soil will be required; and (4) a construction activity schedule for each reach where construction will occur that year.

14. The District is required to use the standard California Wetlands Form to provide Project information describing impacts and restoration measures within 14 days from the date of this Certification. An electronic copy of the form can be downloaded at: http://www.waterboards.ca.gov/sanfranciscobay/certs.shtml. The completed form shall be submitted electronically to habitatdata@waterboards.ca.gov or shall be submitted as a hard copy to both (1) the Regional Water Board (see the address on the letterhead), to the attention of EcoAtlas and (2) the San Francisco Estuary Institute, 4911 Central Avenue, Richmond, CA 94804, to the attention of EcoAtlas.

15. All work performed within waters of the State shall be completed in a manner that minimizes impacts to water quality, beneficial uses, and wetland and riparian habitat along the Lower Berryessa and Lower Calera Creeks.

16. All exposed/disturbed areas within the Project site shall be stabilized. Effective erosion and sediment control best management practices shall be utilized throughout all phases of construction to prevent the discharge of sediment-laden runoff to waters of the State. At no time shall sediment-laden runoff be allowed to enter wetlands or other waters of the State. Erosion and sediment control best management practices shall be monitored before, during and after each storm event. Repairs and improvements to erosion and sediment control best management practices shall be implemented as necessary to prevent erosion and the discharge of sediment to waters of the State.

17. Prior to any reuse of imported soil excavated from other District properties, the District shall characterize the soil in accordance with the Sediment Characterization Plan for the Santa Clara Valley Water District Multi-Year Stream Maintenance Program, November 2013 (Sediment Characterization Plan) (attached). The District shall submit acceptable to the Regional Water Board Executive Officer, a workplan proposal for reuse of any soils excavated from sites other than the Project site, a minimum of 45 days prior to reusing such soils. This soil reuse workplan proposal shall demonstrate that the soils proposed to be reused will be in accordance with the Sediment Characterization Plan.
18. Groundwater or accumulated stormwater removed during dewatering of excavations shall not be discharged directly to waters of the State without meeting the following conditions: Any groundwater or accumulated stormwater released to waters of the State shall not result in changes in turbidity of the receiving waters that cause nuisance or adversely affect beneficial uses. Increases from normal background light penetration or turbidity relatable to the discharge shall not be greater than 10 percent in areas where natural turbidity is greater than 50 NTU. Any groundwater discharged to waters of the State shall have a pH in the range of 6.5 to 8.5.
19. The Applicant shall apply for coverage under, and comply with, the State's NPDES General Permit for Storm Water Discharges Associated with Construction and Land Disturbance Activities (Order No. 2009-0009-DWQ, as amended by Order No. 2010-0014-DWQ and Order 2012-0006-DWQ).
20. The District shall develop Maintenance Guidelines specific for this Project, in accordance with Chapter 3 of the District's Stream Maintenance Program Manual.
21. This Certification action is not intended and shall not be construed to apply to any discharge from any activity involving a hydroelectric facility requiring a Federal Energy Regulatory Commission (FERC) license or an amendment to a FERC license unless the pertinent certification application was filed pursuant to 23 CCR Subsection 3855(b) and that application specifically identified that a FERC license or amendment to a FERC license for a hydroelectric facility was being sought;
22. This certification action is subject to modification or revocation upon administrative or judicial review, including review and amendment pursuant to Section 13330 and Section 3867 of the California Water Code (CWC), Title 23 of the California Code of Regulations (23 C.C.R.).
23. Certification is conditioned upon total payment of the full fee required in State regulations (23 CCR §3833). Payment of $944.00 was received on June 5, 2013

Please be aware that any violation of water quality certification conditions is a violation of State law and subject to administrative civil liability pursuant to California Water Code (CWC) Section 13350. Failure to meet any condition of this Certification may subject the District to civil liability imposed by the Regional Water Board to a maximum of $5,000 per day of violation or $10 for each gallon of waste discharged in violation of this action.

Any requirement for a report made as a condition to this action (I.e., Condition Nos. 10, 11, 12, 13, 14 and 17) is a formal requirement pursuant to CWC Section 13267, and failure to submit, late or inadequate submittal, or falsification of such technical report(s) is also subject to civil liability as described in CWC Section 13268.

Should new information come to our attention that indicates a water quality problem with this Project, the Regional Water Board may issue Waste Discharge Requirements pursuant to 23 CCR Section 3857.

If you have any questions, please contact Margarete "Maggie" Beth at 510-622-2338 or mabeth@waterboards.ca.gov.

Sincerely,

Bruce H. Wolfe
Executive Officer

Attachments:

1. Figure 2 – Project Area
2. Construction within Lower Berryessa Creek Channel – June 10, 2014
3. Habitat Mitigation Monitoring Plan for the Lower Berryessa Creek Program Elements: Lower Berryessa Creek and Lower Calera Creek, June 2014 – Revised July 2014
4. Sediment Characterization Plan for the Santa Clara Valley Water District Multi-Year Stream Maintenance Program, November 2013

Cc: Jennifer Castillo, SCVWD, JCastillo@valleywater.org
Holly Costa, USACE, Holly.N.Costa@usace.army.mil
Luisa Valiela, U.S. EPA, valiela.luisa@epamail.epa.gov
Tami Schane, CDFW, Tami.Schane@wildlife.ca.gov
SWRCB-DWQ, Bill Orme Stateboard401@waterboards.ca.gov
U.S. EPA, Jason Brush, WTR-8 R9-WTR8-Mailbox@epa.gov

Sent via email: No hard copy to follow

April 30, 2019
CIWQS Reg. Meas. 397588
CIWQS Place ID 768945 (SG)
Corps File No. 2003-284400S

Santa Clara Valley Water District
Attn: Mr. James Manitakos
5750 Almaden Expressway
San Jose, CA 95118
Email: JManitakos@valleywater.org

Subject: Second Amendment to Conditional Water Quality Certification for Lower Berryessa Creek and Lower Calera Creek Flood Improvement Project, City of Milpitas, Santa Clara County

Dear Mr. Manitakos:

The San Francisco Bay Regional Water Quality Control Board (Water Board) issued a water quality certification pursuant to Clean Water Act (CWA) section 401 to the Santa Clara Valley Water District (District or Permittee) for the *Lower Berryessa Creek and Lower Calera Creek Flood Improvement Project* (Project) on September 11, 2014, and amended the Certification on October 10, 2014 (Certification). The project is in the City of Milpitas, Santa Clara County. The Project purpose is to modify Berryessa Creek and two of its tributaries, Calera and Tularcitos creeks, to convey the 100-year flow event without overtopping the creeks' banks. The Project has been under construction since 2015.

On November 29, 2018, the District requested authorization to construct a modified design of the Lower Calera Creek Project element. The proposed modifications require a Certification amendment because they include increases in discharges of dredge and fill materials. Specifically, the modifications result in a net increase of 2,000 square feet (sq. ft.) of rock rip-rap and 1,572 cubic yards of concrete fill. However, those increased discharges are for in-kind infrastructure replacements. The proposed modifications would not change the Project's temporary or permanent impacts, and no additional fee is necessary. We posted the proposed modifications on our website for public review and notified potentially interested parties of the changes. We did not receive any comments on the proposed modifications. Accordingly, I hereby amend the Certification (Second Amended

Certification), and authorize the Permittee to proceed with the proposed changes to the Lower Calera Creek element to the Project.

The U.S. Army Corps of Engineers permitted the Project on June 15, 2015, pursuant to CWA, section 404 (404 Permit), with an individual permit (Permit Number 2003-284400S). The Corps determined that the Project modifications will not require changes to the Corps' existing 404 Permit.

District Required to Comply with Second Amended Certification

The previous Certification is attached and incorporated by reference into this Second Amended Certification. The Project modifications, described below, supersede the description in the previous Certification pertaining to the Lower Calera Creek Project element. The Certification's conditions and mitigation requirements are retained and remain applicable to the Second Amended Certification.

For purposes of the Second Amended Certification, "the Modified Project" refers, hereafter, to the Lower Calera Creek element of the *Lower Berryessa Creek and Lower Calera Creek Flood Improvement Project*. The Modified Project reach extends about 3,100 linear feet (LF) from the Berryessa Creek confluence upstream to a drop structure behind Milpitas High School (about 400 feet (ft) upstream of the Arizona Avenue (Ave.) road crossing). The Modified Project is divided into Reaches A and B. Reach A is from the confluence of Lower Berryessa Creek to North Milpitas Boulevard (N. Milpitas Blvd.). Reach B is from N. Milpitas Blvd. to the culvert behind Milpitas High School. The modifications are summarized below. A site map for the overall project, and for the Lower Calera Creek element, are in Figures 1 and 3 in the *Habitat Mitigation Monitoring Plan for the Lower Berryessa Creek Program (July 2014)*, which is Attachment 3 to the previous Certification.

Description of Project Modifications

- *Replace sacked concrete with rock*. The sacked concrete at the N. Milpitas Blvd (Reach A-B boundary) and Arizona Ave. (Reach B) road crossings will be replaced with rock rip-rap. The original plan only included the N. Milpitas Blvd site. The N. Milpitas Blvd site is 1,500 sq. ft., and the Arizona Avenue site is 2,000 sq. ft.

- *Union Pacific Railroad (UPRR) headwalls*. The concrete headwall height at the UPRR crossing in Reach A will be 10 ft tall. The original plan did not specify the headwall heights.

- *Road crossing headwalls*. The heights of the existing concrete headwalls at N. Milpitas Blvd. and Arizona Ave. road crossings will be increased, as follows. The original plan did not specify the headwall heights.
    - *N. Milpitas Blvd.* The upstream and downstream headwall heights will be 9.3 ft and 6.7 ft tall, respectively, resulting in increases of 6.7 ft and 5.7 ft from existing heights.
    - *Arizona Ave.* The upstream and downstream headwall heights will be 6.5 ft and 6.2 ft tall, respectively, resulting in increased heights of 5.4 ft and 4.9 ft from existing heights.

- *Concrete U-frame channel replacement*. The existing Reach A concrete U-frame channel (about 500 LF) will be removed and reconstructed with side walls four feet taller than the current height. The original plan was to keep the existing channel in place and increase the side wall heights by four feet. The Permittee then determined that the existing structure could not support the added weight of taller walls. This requires the replacement of the concrete lining and reconstructing it with taller walls. In addition, the modified U-frame channel bed elevation will be one foot lower than the existing channel to incorporate one foot of sediment over the concrete channel bed. This will improve in-channel habitat relative to the previous design by creating a vegetated soft-bottom channel. The channel bed will be filled with clean soil and revegetated.

- *Floodwalls in Reach B.* The combined floodwall length on the left and right banks will be reduced from 4,400 LF to 3,460 LF. However, the floodwall height on both the left and right banks, originally planned as 2.5 to 6.5 ft, will be increased:
  - Height would range from 5.0 to 9.0 ft on the right (north) bank.
  - Height would range from 4.5 to 8.5 ft on the left (south) bank.
  - The sections that will exceed the previously planned maximum of 6.5 feet tall, are upstream of N. Milpitas Blvd. for 270 LF on the right bank, and 300 LF on the left bank.

The Modified Project design will result in a net increase of 1,572 CY of concrete fill from replacement of the U-frame channel and the increased floodwall heights. However, fill for the U-frame is in-kind replacement and the floodwall heights does not create additional impacts of the Project. In addition, the modifications result in an increase of 2,000 sq. ft. of rock rip-rap fill that will replace sacked concrete at the Arizona Ave. crossing. This is an in-kind replacement of fill that does not result in additional impacts to those previously permitted.

Schedule

The Permittee will construct the Lower Calera Creek Project element starting in 2019 through June 2021, and will complete additional vegetation and monitoring activities for a minimum of five years, pursuant to existing requirements of the Certification. This Second Amended Certification applies to work through 2021 for Project construction and the mitigation and monitoring activities to complete the Project. The Corps issued an extension to the 404 Permit through December 31, 2020, on March 12, 2018. If the Corps requires an amendment to the 404 Permit or reissues the 404 Permit, the Water Board may require the Certification to be amended or reissued to authorize any potential changes to the 404 Permit.

I, Michael Montgomery, Executive Officer, do hereby issue this Order certifying that any discharge from the proposed Project will comply with the applicable provisions of sections 301 (Effluent Limitations), 302 (Water Quality Related Effluent Limitations), 303 (Water Quality Standards and Implementation Plans), 306 (National Standards of Performance), and 307 (Toxic and Pretreatment Effluent Standards) of the Clean Water Act, and with other applicable requirements of State law. This discharge is also regulated under State Water Resources Control Board Order No. 2003-0017-DWQ, “General Waste Discharge Requirements for Dredge and Fill Discharges That

Have Received State Water Quality Certification," which requires compliance with all conditions of this Order.

The Second Amended Certification consists of this letter and its attachment. If you have any questions concerning this matter, please contact Susan Glendening of my staff at (510) 622-2462 or susan.glendening@waterboards.ca.gov. Please reference CIWQS Place ID 768945 in communications for the Project.

Sincerely,

for Michael Montgomery
Executive Officer

Attachment:
A – Amended Certification, October 10, 2014 (with Attachments 1 through 4)

CC: SCVWD:
Melanie Richardson, MRichardson@valleywater.org
Youhan Lee, YLee@valleywater.org
Kevin Gonzales, KGonzales@valleywater.org
Karl Neuman, KNeuman@valleywater.org
Corps, Keith Hess,Keith.D.Hess@usace.army.mil
CDFW, Mayra.Molina, mayra.molina@Wildlife.ca.gov
SWRCB, DWQ, Stateboard401@waterboards.ca.gov
Water Board:
Victor Aelion, victor.aelion@waterboards.ca.gov
U.S. EPA, Region IX, Jennifer Siu, siu.jennifer@epa.gov

Attachment A

CWA Section 401 Water Quality Certification for Lower Berryessa Creek and Lower Calera Creek Flood Improvement Project

October 10, 2014

(Includes Attachments 1 through 4)

October 10, 2014
CIWQS Place No. 768945 (MB)
CIWQS Regulatory Measure No. 397588

Sent via electronic mail: No hardcopy to follow

Santa Clara Valley Water District
5750 Almaden Expressway
San Jose, CA 95118

Attention: Melanie Richardson
Email: MRichardson@valleywater.org

Subject: Amended Conditional Water Quality Certification for Lower Berryessa Creek and Lower Calera Creek Flood Improvement Project, City of Milpitas, Santa Clara County,

Dear Ms. Richardson:

The Regional Water Board has reviewed the application materials submitted by the Santa Clara Valley Water District (District) for the proposed Lower Berryessa Creek and Lower Calera Creek Flood Improvement Project (Project) located in Santa Clara County. The District has applied to the U.S. Army Corps of Engineers (ACOE) Regulatory Branch for (1) a Nationwide Permit to discharge dredge and fill materials to waters of the United States pursuant to Section 404 of the Clean Water Act (CWA) (33 U.S.C. 1344) and (2) to place structures and work in navigable waters pursuant to Section 10 of the Rivers and Harbors Act of 1899 (RHA) (33 U.S.C. 320.2). We have determined that the Project, as proposed, will not violate State water quality standards, and accordingly issue conditional CWA Section 401 water quality certification (Certification) for the Project.

The Applicant submitted an application dated June 5, 2013. The Regional Water Board issued incomplete application letters and requested additional information on June 26, 2013, March 5, 2014, and May 30, 2014. The District provided supplemental information, which was received on February 7, 2014, May 1, 2014, and July 17, 2014, at which time the application was determined to be complete and acceptable. The following Project description is summarized from the application materials received on June 5, 2013, and supplemental information (collectively referred to as the Application).

Project Location and Site Description
The Project's approximately 11,760 linear feet fall entirely within a developed portion of the City of Milpitas in Eastern Santa Clara County (Figure 2 – attached). The two primary creeks in the Project area, the Lower Berryessa and Lower Calera Creeks, and small sections of the Lower Penitencia and Tularcitos creeks within the Project area, are managed earthen flood control channels with the exception of a few sections that have existing hardscape erosion control and concrete bed linings. The Project area is tidally

influenced up to the Abel Street Bridge on Lower Berryessa Creek and up to the Southern Pacific Railroad Bridge on Lower Calera Creek.

Project Purpose
The Project will provide flood protection from the 100-year flood event, improve access for creek maintenance, improve habitat functions, and provide opportunities to incorporate the City of Milpitas trail system on the levees along a total of 11,760 linear feet of stream channel including 8,820 linear feet of Lower Berryessa Creek, 2,835 linear feet of Lower Calera Creek, 75 linear feet of Tularcitos Creek, and 30 linear feet of Lower Penitencia Creek.

Project Description
The District proposes to increase flood protection capacity, which includes (1) restructuring or removing existing levees to widen the channel cross-section, (2) constructing instream benches for riparian habitat; (3) constructing floodwalls, and (4) reducing the number of maintenance roads. Additional activities include constructing new or modifying existing concrete headwalls, bridge footings, and/or aprons. The Project details for each creek are described below. Lower Berryessa Creek is a managed trapezoidal flood control channel consisting of mostly earthen material with the exception of a 210-foot long concrete-lined section at the confluence with Tularcitos Creek and a 700-foot long concrete lined section at Abel Street. The proposed Project for Lower Berryessa Creek includes restructuring or removing existing levees and constructing floodwalls to widen the creek cross section, constructing instream riparian benches, and reducing the maintenance roads from four to two along 8,000 linear feet of the creek. This Project element also includes a 30 linear foot segment of Penitencia Creek and a 75 linear foot segment of Tularcitos Creek at its confluence with Lower Berryessa Creek where modifications to existing structures as described further below will occur to accommodate the rest of the Project.

Levees and Floodwalls: To increase the flood conveyance capacity of the Lower Berryessa Creek, the District proposes to restructure or remove levees and construct floodwalls. The levee along the northeast side of the Lower Berryessa Creek will be raised up to 12 feet along the entire length of the creek, with the exception of the section at the Southern Pacific Railroad Bridge where both levees will be replaced with floodwalls. The levee along the southwest side of the creek will be lowered or removed and replaced with floodwalls between 6 and 19 feet high. Concrete floodwalls will be constructed on both sides of Lower Berryessa Creek at the Able Street location and the confluence of Lower Berryessa and Tularcitos Creeks.

An instream bench up to 30-feet wide will be constructed on the inboard side of the levee to facilitate the creation and maintenance of a low-flow channel in Lower Berryessa Creek. Three separate sections of bench approximating 3,120 linear feet will be planted with native riparian vegetation to provide habitat value to the Lower Berryessa Creek. Rock riprap will be partially buried in the toe of the creek bottom below the benches to protect the bench and the riparian habitat from erosion. Vegetation will also be planted adjacent to and between the buried rock. In addition, Lower Berryessa Creek will be graded in areas adjacent to the low-flow channel to accommodate wetlands creation through installation of plants/seeds/cuttings.

Additional activities related to the levees and floodwalls include the following:

1. Approximately 200 linear feet of riprap will be placed on the Lower Berryessa Creek at the confluence of Calera creek including 50 linear feet of in-kind rock riprap replacement and an additional 150 linear feet of new rock riprap.
2. The existing outfall structure of the pump station near Hidden Lakes that discharges water from the pump station into Lower Berryessa Creek will be modified. Currently, the outfall pipes discharge perpendicular to the creek causing erosion of the opposite bank. When the levee is restructured, the outfall pipe extensions will be angled downstream. The existing bed of the discharge pool at this location is armored with riprap, which will be removed. The sacked concrete bags surrounding the outfall will be replaced with grouted riprap within a smaller area.

Maintenance Road: The maintenance roads will be reduced from four to two, with one on either side of the creek, and widened to 18 feet to improve maintenance access. One maintenance road will be constructed on the raised levee (upper maintenance road) and the other will be constructed adjacent to the floodwall (lower maintenance road). The upper maintenance road will have a surface material of asphalt and also serve as a pedestrian/bicycle trail. Approximately 8,100 linear feet of the lower maintenance road will have a surface material of pre-fabricated cellular concrete mats (CCM) inboard of the floodwall. The lower maintenance road will have four 40-70 foot long by 15 foot wide turnout to accommodate large equipment.

Bridge Crossings: The City of Milpitas Pedestrian Bridge will be raised to accommodate the design capacity. The Abel Street Bridge, North Milpitas Boulevard Bridge, and Hillview Drive Bridge will remain at the existing elevation and headwalls will be constructed or modified to accommodate the design capacity. Access ramps to the lower maintenance road will be constructed at North Abel Street, North Milpitas Boulevard, North Hillview Drive, and the pedestrian bridge.

The proposed Project for Lower Calera Creek includes restructuring or removing existing levees and constructing concrete floodwalls to widen the creek cross section, and constructing maintenance roads on both sides of the creek. Lower Calera Creek is divided into two reaches, A and B. Reach A is a concrete U-Frame channel that begins at the Southern Pacific Railroad (confluence with Lower Berryessa Creek) and extends upstream approximately 470 feet to North Milpitas Boulevard. Reach B is a managed earthen trapezoidal channel that extends 2,300 linear feet from North Milpitas Boulevard to the concrete drop structure behind the North Milpitas High School.

Levee and Floodwalls: In Reach A, floodwalls up to 4 feet in height will be constructed on either side of the existing concrete U-frame structure, which will be retained in its existing conditions. In Reach B, the north levee will be removed and the south levee will be slightly lowered with a 2:1 side slope. Concrete floodwalls will be constructed on both sides of the creek, ranging in height from 2 to 5 feet on the north side, and 3 to 6.5 feet on the south side.

In addition, Lower Calera Creek will be graded in areas adjacent to the low-flow channel to accommodate wetlands creation through installation of plants/seeds/cuttings.

Maintenance Road: A new maintenance road will be constructed on the outboard side along the U-frame channel in Reach A. In Reach B, a new 18-ft wide maintenance road

on the top of the south bank and a new 5-ft wide maintenance trail on the top of the north bank will replace existing levee crest roads. The maintenance roads will have a surface material of compacted aggregate.

Bridge Crossings: Three bridge crossings (Union Pacific Railroad, Milpitas Boulevard, and Arizona Avenue) will remain at the existing elevation and new headwalls will be constructed at upstream side of North Milpitas Boulevard and both upstream and downstream sides of the railroad crossing and Arizona Avenue. New access ramps at each crossing will be constructed.

Dewatering: Each reach scheduled for instream construction will be dewatered if water is present. During dewatering, water flowing in the creek, including seepage from groundwater, and discharge water from storm drains, will be diverted via pipes around the active construction reach, and returned to the creek channel at a location downstream from the construction reach. Best management practices (BMPs) will be implemented to avoid and minimize impacts to water quality, and the quality of water returned to the creek will be tested and monitored to ensure the effectiveness of the BMPs. At the end of each construction season, the cofferdams will be removed the dewatered, sections of the creek will be re-watered and the habitat restored. Dewatering as well as monitoring and treatment process of diverted water will be implemented in accordance with Dewatering Plan as described in the Construction within the Lower Berryessa Creek Channel, dated June 10, 2014, (attached).

Staging: Staging of construction and temporary storage of materials, vehicles, and equipment will occur at three areas and include (1) Milpitas High School (Calera Creek); (2) north side of Calera Creek at Abel Street and Hanson Court; and (3) south side of Abel Street (between Abel Street and residences on Conventry Way). The staging area at the south side of Abel Street has a 0.015 acre jurisdictional wetland located at the farthest northeastern section of the area. All construction staging will occur outside of the creek and outside of the jurisdictional wetlands area. To ensure no impacts to the wetlands occur, the District will install a temporary fence between the wetlands and the equipment and materials storage area. Staging areas will be returned to pre-existing conditions after work is complete. No direct or indirect impacts to the 0.015-acre wetlands or associated habitat should result.

Impacts

The San Francisco Bay Basin Water Quality Control Plan (Basin Plan) defines the beneficial uses of waters of the State. The Project will impact Lower Berryessa Creek, Lower Calera Creek, Lower Penitencia Creek, and Tularcitos Creek. The Basin Plan assigns the following beneficial uses to all four creeks: Warm Freshwater Habitat (WARM), Wildlife Habitat (WILD), Water Contact Recreation (REC-1), Noncontact Water Recreation (REC-2), and Navigation (NAV).

The Project will permanently fill approximately 300 linear feet (0.20 acres) of waters of the State due to the placement of new rock riprap and concrete . The Project will temporarily disturb a total of 23,380 linear feet (10.58 acres) of waters of the State including 5.21 acres of jurisdictional wetlands (4.0 acres of tidal brackish marsh and 1.21 acres of freshwater marsh), 1.20 acres of riparian/upland woody vegetation, and 4.17 acres of open water (3.10 acres of non-tidal water and 1.07 acres of tidal water). An

additional 9,875 linear feet (16.83 acres) of ruderal annual grassland habitat will be temporarily disturbed due to grading activities.

The Project will result in the excavation of approximately 205,250 cubic yards of soil and fill of approximately 193,050 cubic yards of soil, rock riprap, and concrete. Approximately 50 linear feet of rock riprap will be replaced in-kind and 150 linear feet of new riprap will be installed. Approximately 160 linear feet of new concrete will be installed for bridge footings and west bank protection of the maintenance road upstream of Abel Street. Approximately 3,100 linear feet of rock riprap will be buried in the toe of the creek and vegetation planted within the openings between the rocks.

Mitigation
To mitigate for the permanent fill of approximately 431 linear feet (0.21 acres) and temporary disturbance of 23,380 linear feet (10.58 acres) of waters of the State, the District will mitigate in accordance with the Habitat Mitigation Monitoring Plan for the Lower Berryessa Creek Program Elements: Lower Berryessa Creek and Lower Calera Creek, dated June, 2014, revised July 2014 (HMMP) (attached) and as summarized below.

Wetlands
Approximately 5.21 acres of brackish and freshwater/seasonal wetlands habitat will be restored and 1.15 acres of brackish and freshwater/seasonal wetlands habitat will be created through active planting and adaptive management of wetland areas located between the low-flow channel and the toe of the reconstructed levees. At each creek reach, replanting will occur in the same year as channel construction activities, to limit the duration of the temporary impacts to wetlands.

Immediately after each creek reach is dewatered, wetlands plants and soil will be salvaged from the active creek reach. Existing perennial wetland plants will be salvaged first, making sure to harvest all rhizomes and root mass. The plant material will be kept moist at the staging area, so that roots and rhizomes do not dry out. The uppermost 6 to 12 inches of topsoil will be salvaged from existing wetlands and stored at the construction staging areas for re-use at the site, to the extent practicable.

Native perennial wetland vegetation from container stock, and local cuttings, to supplement the salvaged plants from the creek and topsoil seed bank will be actively planted in the wetland areas. Container stock will be obtained from local native plant nurseries or contract harvested and grown by a local nursery utilizing seed and propagules from the Coyote Creek watershed. The re-vegetation areas within the newly constructed creek reaches will be planted and adaptively managed to promote restoration of habitat, including a 22% increase in area of wetlands habitat compared to existing area.

Riparian
At least 2.32 acres of instream native riparian vegetation will be planted to create a new high-value riparian habitat atop three instream earthen benches along Lower Berryessa Creek. Project construction will also result in a 1.12-acre net increase in native riparian habitat through the creation and planting of low earthen benches within the widened creek of Lower Berryessa Creek at locations identified in the following table.

Area	Reach	Station Locations	Length (linear feet)	Bench Width	Low Bench Footprint Areas	
					Ft^2	Acres
1	D	34+00 to 53+83	1,983	30	59,490	1.25
2	D,E	59+04 to 70+74	1,170	30	35,100	0.80
3	G	74+00 to 78+00	400	30	12,000	0.27
Total Length of Low Bench Riparian			**3,553 feet**			
Total Area of Low Bench Riparian			**100,942 Ft^2 (2.32 Acres)**			

The instream benches will be constructed at an elevation of 1 to 2 feet above the low-flow water surface in close proximity to the low-flow channel. Each bench will be stabilized with a combination of jute netting covering the surface of the benches and ½ ton rock riprap at the perimeter of the benches. The rock riprap will form an erosive barrier at the inner edge of the benches and will anchor the jute netting, therefore reducing the potential for erosion of the benches. Rock riprap will also be placed at the stream-side perimeter of the riparian benches and buried in the creek bottom to a depth of at least one-half the rock's diameter. Riparian vegetation will be planted and maintained adjacent to and between the partially buried rocks.

Open Water
The temporarily dewatered reaches will be re-watered upon completion of each reach by removing the dewatering system and restoring flows in the creek.

Ruderal/Upland Habitat
The upland areas will be hydroseeded with native seeds to restore upland grass habitat. Best Management Practices to avoid and minimize adverse impacts during construction, as identified in the Application materials, will be implemented to prevent adverse effects on water quality. In addition, the District will conduct daily water quality testing in accordance with the HMMP.

(Continued on page 7)

Project Impacts and Proposed Compensatory Mitigation				
Habitat/Parameter	Lower Berryessa Element	Lower Penitencia / Tularcitos Creek	Lower Calera	Overall Project
Instream Wetlands				
Permanent Impact				
Linear feet	300	0	0	**300**
acres	0.2	0	0	**0.2**
Temporary Impact				
Linear feet	7,600	75	2,000	**9,675**
acres	4.61	0.03	0.57	**5.21**
Mitigation				
Linear feet	7,800	75	2,000	**9,875**
acres	5.13	0.03	1.2	**6.36**
Riparian				
Impact				
Linear feet	1,900	0	0	**1,900**
acres	1.2	0	0	**1.2**
Mitigation				
Linear feet	3,000	0	0	**3,000**
acres	2.32	0	0	**2.32**
Open Water				
Impact				
Linear feet	8700	105	3000	**11,805**
acres	3.64	0.05	0.48	**4.17**
Mitigation				
Linear feet	8700	105	3000	**11,805**
acres	3.64	0.05	0.48	**4.17**
Ruderal Grasses				
Impact				
Linear feet	7,700	75	2,100	**9,875**
acres	14.79	0.03	2.01	**16.83**
Mitigation				
Linear feet	20.5	75	2,100	**9,975**
acres	20.5	0.03	1.68	**22.21**

CEQA Compliance: The District as lead agency submitted an endorsed Notice of Determination, dated December 15, 2011, indicating that a Final Environmental Impact Report was prepared and approved in compliance with the California Environmental Quality Act (CEQA), (Project State Clearinghouse Number 2007 092 084).

EcoAtlas: It has been determined through regional, state, and national studies that tracking of mitigation/restoration projects must be improved to better assess the performance of these projects, following monitoring periods that last several years. In addition, to effectively carry out the State's Wetlands Conservation Policy of no net loss to wetlands, the State needs to closely track both wetland losses and mitigation/restoration project success. Therefore, we require that the District use the

California Wetlands Form to provide Project information related to impacts and mitigation/restoration measures (see Condition No. 16 of this Certification). An electronic copy of the form and instructions can be downloaded at: http://www.waterboards.ca.gov/sanfranciscobay/certs.shtml. Project information concerning impacts and mitigation/restoration will be made available at the web link: http://www.ecoatlas.org/regions/ecoregion/bay-delta/projects

Certification: I hereby issue an order certifying that any discharge from the referenced Project will comply with the applicable provisions of Sections 301 (Effluent Limitations), 302 (Water Quality Related Effluent Limitations), 303 (Water Quality Standards and Implementation Plans), 306 (National Standards of Performance), and 307 (Toxic and Pretreatment Effluent Standards) of the Clean Water Act, and with other applicable requirements of State law. This discharge is also regulated under State Water Resources Control Board Order No. 2003 - 0017 - DWQ, "General Waste Discharge Requirements for Dredge and Fill Discharges That Have Received State Water Quality Certification" which requires compliance with all conditions of this Water Quality Certification. The following conditions are associated with this certification:

1. The Project shall be constructed in conformance with the Project description provided in the approved Application materials. Any changes to Project design must receive Regional Water Board Executive Officer approval before the changes are implemented.

2. Disturbance or removal of vegetation shall be minimized. The site shall be stabilized through incorporation of appropriate BMPs, including the successful reestablishment of native vegetation, to enhance wildlife habitat values, and to prevent and control erosion and sedimentation.

3. No debris, soil, creosote treated wood, cement, concrete, or washings thereof, oil or other petroleum products, or any other unauthorized construction related materials or wastes shall be allowed to enter into or be placed where it may be washed by rainfall or runoff into waters of the State. When operations are completed, any excess material shall be removed from the work area and any areas adjacent to the work area where such material may be washed into waters of the State.

4. No equipment shall be operated in stream channels or other waters where there is flowing or standing water. No fueling, cleaning, or maintenance of vehicles or equipment shall take place within any areas where an accidental discharge to waters of the State may occur.

5. This certification does not allow for the take, or incidental take, of any special status species. The District shall use the appropriate protocols, as approved by the California Department of Fish and Wildlife, U.S. Fish and Wildlife Service, and/or National Marine Fisheries Service to ensure that Project activities do not impact the Beneficial Use of the Preservation of Rare and Endangered Species.

6. Construction is restricted to the period May 1 to October 15 in non-tidally influenced reaches and June 15 to October 15 in tidally influenced reaches.

Temporary extensions of this work period may be granted after October 15 contingent upon favorable weather forecasts and approval by the Regional Water Board Executive Officer, with the concurrence of the applicable resource agencies.

7. Concrete used in the Project shall be allowed to completely cure (a minimum of 28-days) or be treated with a CDFW-approved sealant before it comes into contact with flowing water.
8. The District shall implement water quality monitoring as described in the Habitat Mitigation Monitoring Plan for the Lower Berryessa Creek Program Elements: Lower Berryessa Creek and Lower Calera Creek, dated June 2014, as revised July 2014 (attached). Any changes to the water quality monitoring plan must receive Regional Water Board Executive Officer approval before the changes are implemented.
9. The District shall implement dewatering and rewatering activities for each creek reach as described in the Dewatering Plan. Any changes to the Dewatering Plan must receive Regional Water Board Executive Officer approval before the changes are implemented.
10. A minimum of 60 days prior to implementing revegetation activities in each reach, the District shall submit 100% revegetation design plans and specifications acceptable to the Regional Water Board Executive Officer. The 100% revegetation design plans and specifications shall include at a minimum the following information:
    a. Soil salvage plans and drawings;
    b. Salvaged soil spreading plans and drawings;
    c. Planting area layout plans and drawings;
    d. Species palette;
    e. Planting densities;
    f. Sources of plant materials for propagation and installation;
    g. Container plant installation specifications;
    h. Planting area maintenance specifications;
    i. Temporary soil erosion control measures.
11. Mitigation areas shall be monitored for a minimum of five years, or longer if necessary, until the mitigation success criteria as specified in Section 5.1 of the HMMP is achieved. Annual Reports shall be submitted acceptable to the Regional Water Board Executive Officer no later than January 31 following each mitigation monitoring period until the mitigation habitat has been successfully established. The Annual Reports shall describe each year's monitoring results, compare these results to the previous years' monitoring results and annual success criteria, and describe progress made towards meeting the approved final success criteria. If annual performance criteria are not met, the Annual Reports shall identify remedial actions that will be implemented to achieve the mitigation success criteria. The annual mitigation

monitoring and reporting activities, and remedial actions as necessary, shall continue until the approved mitigation success criteria are achieved. In the event that it is determined that the proposed success criteria cannot be achieved in a mitigation area, an alternative mitigation plan shall be proposed acceptable to the Regional Water Board Executive Officer to supplement/compensate for the failed mitigation.

12. Once the mitigation habitat is successfully established, a comprehensive final mitigation monitoring report shall be submitted acceptable to the Regional Water Board Executive Officer documenting that the mitigation habitat has achieved the final mitigation success criteria. At a minimum, the final mitigation monitoring report shall include: a description of the results of the final year's monitoring results, including submittal of the botanical and hydrologic data collected, representative photographs of the mitigation areas, corresponding maps, and a comparison of the final year's monitoring data to the final mitigation success criteria.

13. Annual Construction Status Reports shall be submitted acceptable to the Regional Water Board Executive Officer by April 1 of each year construction is planned. The Construction Status Reports shall include the following information: (1) a summary of the year's planned construction activities for each reach; (2) identification of any reaches that will require dewatering; (3) the results of soil characterization and whether imported soil will be required; and (4) a construction activity schedule for each reach where construction will occur that year.

14. The District is required to use the standard California Wetlands Form to provide Project information describing impacts and restoration measures within 14 days from the date of this Certification. An electronic copy of the form can be downloaded at: http://www.waterboards.ca.gov/sanfranciscobay/certs.shtml. The completed form shall be submitted electronically to habitatdata@waterboards.ca.gov or shall be submitted as a hard copy to both (1) the Regional Water Board (see the address on the letterhead), to the attention of EcoAtlas and (2) the San Francisco Estuary Institute, 4911 Central Avenue, Richmond, CA 94804, to the attention of EcoAtlas.

15. All work performed within waters of the State shall be completed in a manner that minimizes impacts to water quality, beneficial uses, and wetland and riparian habitat along the Lower Berryessa and Lower Calera Creeks.

16. All exposed/disturbed areas within the Project site shall be stabilized. Effective erosion and sediment control best management practices shall be utilized throughout all phases of construction to prevent the discharge of sediment-laden runoff to waters of the State. At no time shall sediment-laden runoff be allowed to enter wetlands or other waters of the State. Erosion and sediment control best management practices shall be monitored before, during and after each storm event. Repairs and improvements to erosion and sediment control best management practices shall be implemented as necessary to prevent erosion and the discharge of sediment to waters of the State.

17. Prior to any reuse of imported soil excavated from other District properties, the District shall characterize the soil in accordance with the Sediment Characterization Plan for the Santa Clara Valley Water District Multi-Year Stream Maintenance Program, November 2013 (Sediment Characterization Plan) (attached). The District shall submit acceptable to the Regional Water Board Executive Officer, a workplan proposal for reuse of any soils excavated from sites other than the Project site, a minimum of 45 days prior to reusing such soils. This soil reuse workplan proposal shall demonstrate that the soils proposed to be reused will be in accordance with the Sediment Characterization Plan.
18. Groundwater or accumulated stormwater removed during dewatering of excavations shall not be discharged directly to waters of the State without meeting the following conditions: Any groundwater or accumulated stormwater released to waters of the State shall not result in changes in turbidity of the receiving waters that cause nuisance or adversely affect beneficial uses. Increases from normal background light penetration or turbidity relatable to the discharge shall not be greater than 10 percent in areas where natural turbidity is greater than 50 NTU. Any groundwater discharged to waters of the State shall have a pH in the range of 6.5 to 8.5.
19. The Applicant shall apply for coverage under, and comply with, the State's NPDES General Permit for Storm Water Discharges Associated with Construction and Land Disturbance Activities (Order No. 2009-0009-DWQ, as amended by Order No. 2010-0014-DWQ and Order 2012-0006-DWQ).
20. The District shall develop Maintenance Guidelines specific for this Project, in accordance with Chapter 3 of the District's Stream Maintenance Program Manual.
21. This Certification action is not intended and shall not be construed to apply to any discharge from any activity involving a hydroelectric facility requiring a Federal Energy Regulatory Commission (FERC) license or an amendment to a FERC license unless the pertinent certification application was filed pursuant to 23 CCR Subsection 3855(b) and that application specifically identified that a FERC license or amendment to a FERC license for a hydroelectric facility was being sought;
22. This certification action is subject to modification or revocation upon administrative or judicial review, including review and amendment pursuant to Section 13330 and Section 3867 of the California Water Code (CWC), Title 23 of the California Code of Regulations (23 C.C.R.).
23. Certification is conditioned upon total payment of the full fee required in State regulations (23 CCR §3833). Payment of $944.00 was received on June 5, 2013

Please be aware that any violation of water quality certification conditions is a violation of State law and subject to administrative civil liability pursuant to California Water Code (CWC) Section 13350. Failure to meet any condition of this Certification may subject the District to civil liability imposed by the Regional Water Board to a maximum of $5,000 per day of violation or $10 for each gallon of waste discharged in violation of this action.

Any requirement for a report made as a condition to this action (I.e., Condition Nos. 10, 11, 12, 13, 14 and 17) is a formal requirement pursuant to CWC Section 13267, and failure to submit, late or inadequate submittal, or falsification of such technical report(s) is also subject to civil liability as described in CWC Section 13268.

Should new information come to our attention that indicates a water quality problem with this Project, the Regional Water Board may issue Waste Discharge Requirements pursuant to 23 CCR Section 3857.

If you have any questions, please contact Margarete "Maggie" Beth at 510-622-2338 or mabeth@waterboards.ca.gov.

Sincerely,

for

Bruce H. Wolfe
Executive Officer

Attachments:

1. Figure 2 – Project Area
2. Construction within Lower Berryessa Creek Channel – June 10, 2014
3. Habitat Mitigation Monitoring Plan for the Lower Berryessa Creek Program Elements: Lower Berryessa Creek and Lower Calera Creek, June 2014 – Revised July 2014
4. Sediment Characterization Plan for the Santa Clara Valley Water District Multi-Year Stream Maintenance Program, November 2013

Cc: Jennifer Castillo, SCVWD, JCastillo@valleywater.org
Holly Costa, USACE, Holly.N.Costa@usace.army.mil
Luisa Valiela, U.S. EPA, valiela.luisa@epamail.epa.gov
Tami Schane, CDFW, Tami.Schane@wildlife.ca.gov
SWRCB-DWQ, Bill Orme Stateboard401@waterboards.ca.gov
U.S. EPA, Jason Brush, WTR-8 R9-WTR8-Mailbox@epa.gov

Lower Berryessa Creek and Lower Calera Creek Flood Improvement Project – CWA 401 Certification

Figure 2 – Project Area

SOURCE: ESA

Lower Berryessa and Lower Calera Creek Creek Flood Protection Improvements Project . 201425

Figure 2
Project Area

Lower Berryessa Creek and Lower Calera Creek Flood Improvement Project – CWA 401 Certification

Construction within Lower Berryessa Creek Channel – June 10, 2014

Construction within Lower Berryessa Creek Channel
June 10, 2014

1. Objectives

- Temporally divert water from reaches of Lower Berryessa Creek in an environmentally sound manner to facilitate construction of the creek channel improvements.
- Perform dewatering in a manner that furthers the water quality objectives of the San Francisco Bay Basin Plan.
- Maintain natural flow conditions in the creek channel upstream and downstream of the creek reach under active construction.
- Prevent erosion, sedimentation, and siltation from occurring upstream or downstream creek reach under active construction.

2. Design Event

The design flow is 20 cubic feet per second (cfs) which is the likely maximum flow in Lower Berryessa Creek during the construction period of storm of May 1 through October 15.

3. Schedule

The dewatering system will be in place and functioning prior to the start of in-channel construction work and will be removed only after all construction work on dewatered channel reach is complete. The construction period will be during the dry season from May 1 to October 15 for non-tidally influenced reaches (i.e. Reaches C through G of Lower Berryessa Creek) and from June 15 to October 15 for tidally influenced reaches (Reaches A and B of Lower Berryessa Creek).

Installation of the dewatering system will take approximately one week, and will commence at an allowed start date per the regulatory approvals. After construction activities at a reach are completed, the coffer dams and diversion system will be removed within 48 hours. Flows will be restored to the new construction reach in a manner that minimizes erosion. Ponded water will be re-directed into the established low-flow channel in a gradual manner to avoid an erosive surge of water.

4. Description of Dewatering System

4.1 System Overview

The dewatering system will be composed of a coffer dams spanning the full width of the creek channel located at the upstream and downstream boundaries of the construction reach, 36-inch diameter fused high-density polyethylene (HDPE) pipes to convey the diverted water around the construction reach, polychlorinated vinyl (PVC) pipes to convey water discharged from drain outlets to the HDPE trunk line, and riprap or equivalent erosion protection for the system discharge point.

4.2 Coffer Dams

Coffer dams will be 5 to 6 ft in height (see calculations in Appendix A) and constructed using a combination of gravel-filled sandbags and sheet plastic with a minimum thickness of

6 mil. The gravel fill for the sandbags will contain no more than 15% fines. The gravel-filled sandbags will be placed on top of the plastic material, which will be laid above the invert for the 36-inch HDPE pipe. The width of the invert must be enough to wrap the installed sandbags in a “burrito-wrap” configuration. The sandbags will stacked in a staggered pyramid-like fashion (see Detail 1, Figure 1). After the design height has been reached, the original sheet plastic shall be placed on top of the sandbags and secured with additional sand bags. Sandbags on top of the sheet plastic will be spaced no more than 3 ft apart. To maximize flow inflow through the 36-inch HDPE pipe, the upstream configuration of the coffer dam will have a funnel shape with the portions closest to the channel banks wider than the mid-channel portion of the coffer dam. The top of the dam will be lowest in height at the center of the dam and increase in height towards the banks, thereby directing overtopping water into the pre-existing low flow creek channel.

4.3 Pipe System

The pipe system will be composed of a 36-inch diameter fused HDPE pipe trunk line and 6- to 18-inch PVC collector pipes. The system will use pumps connected to the 36-inch trunk line to convey water impounded by the upstream coffer dam and water collected from storm drain outlets to the low flow creek channel below the lower coffer dam. Sandbags and a non-shrink grout plug will be installed on each storm drain outlet along the active reach to divert water into the PVC collector pipe. 4” x 4” wood struts or equivalent materials would be used to support the collector pipes (see Detail 2, Figure 1). If gravity flow is not effective in conveying water from the storm drain outlets to the HDPE trunk line, pumps will be used as necessary. Riprap (1/4 to 1/2 ton) will be placed at the downstream discharge point of the HDPE pipe to prevent erosion of the channel bed. If necessary, one or more check dams, composed of straw/hale bales secured by wooden stakes (straw/hale bales) would be installed to slowly reduce water velocities and prevent bed erosion.

4.4 Groundwater

All construction work will be implemented under dry creek conditions. If groundwater seepage occurs within the dewatered reach, pumps will be used to discharge the seepage flows to intakes of the 36-inch HDPE trunk line. When discharging into the intakes of the 36-inch pipe, the top opening of the intake will be sealed to maintain air pressure within the pipe.

4.5 Tidal Influences

The maximum elevation for the mean high-high tidal water influence is estimated at approximately 7.5 feet mean sea level (MSL). This tidal influence extends a short distance upstream of the Abel Street crossing (approximately Station 29+00). The downstream coffer dam for the reaches at or downstream of Station 29+00 would be set at elevation 8 feet MSL to prevent the intrusion of tidal water upstream from the coffer dam. Since tidal waters can potentially reduce the flows downstream or even back up the flows upstream, pumps will be on standby to transfer excess flows downstream of the coffer dam.

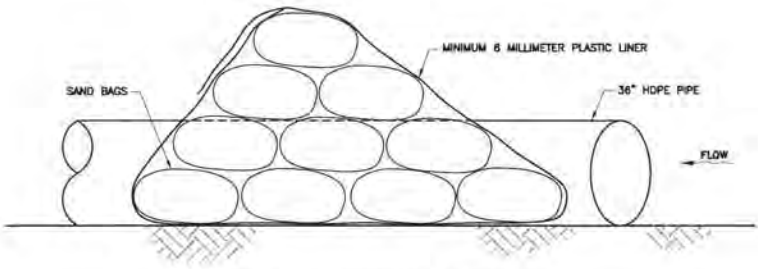

DETAIL 1 TYPICAL COFFER DAM

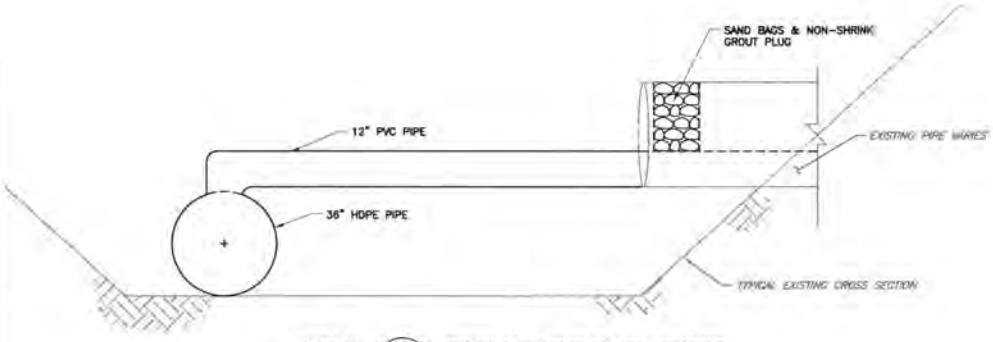

DETAIL 2 TYPICAL TEMPORARY WATER DIVERSION INTAKE DETAIL

FILENAME: K:\Active Projects\MP-40174004\Lower Berryessa Creek Project\Sheet\Figure\Diversion Pipe Details.dwg

Santa Clara Valley Water District

PROJECT NAME AND SHEET DESCRIPTION:	SCALE	PROJECT NUMBER
LOWER BERRYESSA FLOOD PROTECTION TEMPORARY WATER DIVERSION PIPE DETAILS	NOT TO SCALE VERIFY SCALES 0 1/2" BAR IS ONE INCH ON ORIGINAL DRAWING IF NOT ONE INCH ON THIS SHEET, ADJUST SCALES ACCORDINGLY	40174004 FIGURE 1 1 OF 1

4.6 System Removal

Once the construction work is completed at a dewatered reach, the diversion system and coffer dams will be removed within 48 hours of completion. Removal of the diversion pipe will start at the downstream terminus of the system and proceed upstream. Flows will be restored within the new construction area in a manner that minimizes erosion. Ponded flows will be re-directed into the established low-flow channel. Flows will be gradually restored to the channel to avoid a potentially erosive surge of water. All equipment and materials used in the dewatering system will be removed from the creek channel for re-use or proper disposal.

5. Dewatered Channel Reaches

The reaches of Lower Berryessa channel that will be dewatered are given in Table 1. The boundaries of these reaches may be modified somewhat in the field to increase construction efficiency.

Table 1: Definition of Channel Reaches

Reach No.	Description	Stations
1	Lower Penitencia/Lower Berryessa Creek confluence to Abel Street Bridge	0+00 to 22+50
2	Upstream of Abel Street to downstream of North Milpitas Boulevard	22+50 to 54+00
3	Downstream of North Milpitas Boulevard to downstream of Pedestrian Bridge	54+00 to 71+00
4	Downstream of Pedestrian Bridge to upstream of East Calaveras Boulevard	71+00 to beyond 85+93

At each reach, the full width of the channel will be dewatered. Each reach may be dewatered at different times within the same construction season.

6. Water Quality Monitoring

6.1 Monitoring Locations

The dewatering contractor will be responsible for visual observations, collection of water samples, and transportation of samples in a timely manner to an accredited laboratory testing. Water samples will be collected from the creek channel above and below the dewatered zone and from the HDPE pipe system within the dewatered zone. The HDPE pipe system will include air vents at maximum intervals of 500’ in to allow collection of water samples from the pipes. During normal operation, the air vents will remain closed; the vents will be opened to obtain water sample. Water samples will be collected at the locations listed in Table 2.

Table 2: Water Quality Sample Collection Points	
Zone	**Locations**
Upstream from dewatered zone	100 ft above coffer dam
Dewatered Zone	500 ft intervals (minimum)
Downstream from dewatered zone	100 ft below zone

6.2 Parameters, Frequency and Duration

Water quality testing will commence two days prior to installation of the dewatering system and will continue until one day after the dewatering system is completely removed. Observations, testing and sampling will be performed for the parameters listed in Table 3. Water quality readings will be submitted as part of daily QA/QC reports.

Table 3: Water Quality Testing Parameters		
Parameter	**Frequency of Sampling/Testing**	**Exceedance limit**
Turbidity	Twice daily*	Incremental increase by 5 NTUs if background <50 NTUs and 10 percent if background >=50 NTUs
pH	Twice daily*	>0.5 units deviation above or below ambient levels
Dissolved Oxygen	Twice daily*	Minimum of 5.0 mg/l or no change if background <5.0 mg/l
Temperature	Twice daily*	Increase by more than 5 °F > natural temperatures
Floating, suspended or deposited macroscopic particulate matter or foam; Alteration of apparent color beyond present natural background levels; Visible floating, suspended, or deposited oil or other products of petroleum origin	daily*	Visual observation only

* Daily is defined as each day in which construction work occurs in the channel reach. Typically this will be Monday through Friday except for holidays. If any construction occurs on a Saturday, Sunday, or holiday, water quality monitoring will occur on that day also.

6.3 Mitigation and Reporting

If the measured or observed quality of diverted water exceeds any of the parameter limits listed in Table 3, the contractor will immediately notify the Water District and investigate the potential source of the problem. If the contractor's operations are causing the problem, then the issue will be corrected immediately. If the source is outside of/beyond the project limits,

the contractor will notify the Water District, who will then notify the regulatory agencies of the situation, so that the regulatory agencies can determine the proper response to the water quality issue.

The district will record the water sampling and testing data and report the assembled and certified data to the RWQCB on a periodic basis.

7. Best Management Practices (BMPs)

7.1 Applicable BMPs

The design and operation of the Lower Berryessa Creek dewatering system will conform to applicable SCVWD BMPs to prevent adverse water quality impacts. Table 4 lists the applicable BMPs and the subsections add project specific details.

Table 4: Water Quality BMPs Applicable to Lower Berryessa Creek Dewatering System

BMP No.	Title
WQ-1	Conduct Work from Top of Bank
WQ-2	Evaluate Use of Wheel and Track Mounted Vehicles in Stream Bottoms
WQ-3	Limit Impact of Pump and Generator Operation and Maintenance
WQ-4	Limit Impacts of Sediments on Water Quality
WQ-5	Limit Impacts From Staging and Stockpiling Materials
WQ-6	Stabilize Construction Entrances and Exits
WQ-8	Minimize Erosion from Removal of In-channel Vegetation
WQ-9	Limit Impact of Concrete Near Waterways
WQ-10	Isolate Work in Tidal Areas With Use of Coffer Dam
WQ-11	Isolate Work in Non-tidal Sites With Use of Diversion of Bypass
WQ-13	Use Seeding for Erosion Control, Weed Suppression, and Site Improvement
WQ-14	Manage Exposed Groundwater at Work Sites
WQ-16	Maintain Clean Conditions at Work Sites
WQ-17	Control Sediment/ Turbidity from Discharges
WQ-22	Prevent Water Pollution
WQ-23	Prevent Stormwater Pollution
WQ-24	Manage Sanitary and Septic Waste

7.2 Fish Rescue

Fish occurring in Lower Berryessa Creek consist of a mix of native and non-native minnows. No listed fish species are known or expected to be present. Based on the methodology and policy considerations contained in California Department of Fish and Wildlife Departmental

Bulletin No. 2013-04, rescue of fish from Lower Berryessa Creek is not warranted due to the potential for exceeding the carrying capacity of any relocation reaches and spread of disease. Therefore active fish relocation will not be pursued.

7.3 Pump Screens

All pumps intakes will be equipped with screens with mesh openings no greater than 5 mm in size to prevent the accidental intake of fish, amphibians, or reptiles.

7.4 Material Stockpiles

Construction materials will to be stored outside the creek channel until required for the project. Any stockpile materials not immediately removed for offsite disposal will be contained.

7.5 Equipment Use

No fueling or repair of equipment or vehicles will occur within the creek channel, Drip pans will be placed under all idling equipment. Any fluids released from equipment (e.g. motor oil, fuel, lubricants, hydraulic fluid) will be promptly cleaned up for proper offsite disposal.

7.6 Excess Volume of Impounded Water

If the volume of water impounded at the upstream coffer dam or seeping into the active channel reach exceeds the capacity of the dewatering system, the excess water will be pumped into baker tanks for temporary storage and proper disposal.

7.7 Inspections

Knowledgeable dewatering system contractor and/or SCVWD staff will inspect the dewatering system on a daily basis to ensure system integrity and proper functioning.

8. Contingency Plans

8.1 Storm Event

It is unlikely, but possible, that a dry season precipitation event could be of sufficient magnitude to exceed the design capacity of the dewatering system. To prevent damage to the system and adverse environmental impacts, the contractor will adhere to the requirements in Table 4.

Table 5: Dry Season Storm Contingency Plans

Event	Response
≥ 30% likelihood of significant precipitation	Inspect all BMPs and remedy identified deficiencies
≥ 50% % likelihood of significant precipitation	Maintain baker tanks and pumps at dewatering site and collect excess water as required
Precipitation causes violation of water quality standard	All construction operations cease until applicable water quality parameter is met

8.2 System Failure

The dewatering system could fail due to mechanical problems or unusually heavy flows exceeding the design flow. As a contingency, spare pipe materials, fittings, and pumps will be stored on site to facilitate timely repairs of damaged parts, thereby ensuring that the systems has a high degree of reliability and operability. In addition, additional pumps and baker tanks will be maintained on site. Excess flows will be filtered through the baker tanks and appropriately discharged downstream of the active reach.

In the case of actual or incipient system failure, the dewatering system contractor will notify SCVWD immediately. SCVWD will immediately perform all practical actions to remove sources of pollutants associated with the construction effort from the creek channel or prevent their entrainment by water flowing in the creek channel. This includes removing equipment and vehicles from the channel and protecting material stockpiles from in-channel flows.

APPENDIX A: Calculation of Coffer Dam Height

Santa Clara Valley Water District
5750 Almaden Expressway, San Jose 95118-3614, Phone 265-2600

Page 1 of
Charge No.
By ROGER NARSIM
Date 3/31/14
Checked by Date

Subject COFFER DAM HEIGHT CALCULATIONS FOR LOWER BERRYESSA CREEK

AVERAGE BED SLOPE = 0.0008 (SEE SHT C-2; STA 9+25, ELE: 6.2' STA 21+00, ELE = 7.1')

OUTLET PIPE HDPE 30" ϕ

AVERAGE SUMMER FLOW RATE ≈ 10 CFS

Q = DESIGN FLOW RATE FOR COFFER DAM = 20 CFS

USE $n = 0.013$

$\phi = 30''$, $A = 4.909$ SQ.FT $K = 410.1$, $K = \frac{Q}{\sqrt{S}}$

$$Q = \frac{1.486}{n} A R^{2/3} S^{1/2}$$

ASSUME SUBMERGED SOFFIT AT OUTLET.
HGL AT D/S = DIA. OF PIPE (2.5')

LOSS OF HEAD DUE TO FRICTION

$$h_f = S_f L = \left(\frac{Q}{K}\right)^2 L = (0.0024) \times L$$

PROPOSED LENGTH OF HDPE PIPE = 1000'

$$h_f = (0.0024) \times 1000 = 2.4'$$

$$V = \frac{Q}{A} = \frac{20}{4.909} = 4.07 \text{ feet per sec.}$$

$$0.2 \frac{V^2}{2g} \text{ (entrance loss)} + \frac{V^2}{2g} \text{ (velocity head)}$$

$$= 0.31'$$

TOTAL HEIGHT REQUIRED AT D/S END OF PIPE

= 2.5' (DIA. OF PIPE) + 2.4' + 0.31' = 5.21' (EGL)

ELE. DIFFERENCE = 0.0008 × 1000 = 0.8

ASSUME 1' OF FB

→ HEIGHT OF COFFER DAM = 5.21' − 0.8' + 1.0
= 5.41' USE 5'-6"

FC 807 (2-6-03)

printed on recycled paper

Lower Berryessa Creek and Lower Calera Creek Flood Improvement Project – CWA 401 Certification

Habitat Mitigation Monitoring Plan for the Lower Berryessa Creek Program Elements: Lower Berryessa Creek and Lower Calera Creek, June 204 – Revised July 2014

Habitat Mitigation Monitoring Plan
for the
Lower Berryessa Creek Program Elements:
Lower Berryessa Creek and Lower Calera Creek

Prepared by

Santa Clara Valley Water District
5750 Almaden Expressway
San Jose, CA 95118

Under the direction of
Jennifer Castillo
Environmental Services Unit Manager

June 2014

Revised July 2014

TABLE OF CONTENTS

Contents

Section 1.0 Introduction 1
1.1 Location of Project Elements 1
1.2 Description of Project Elements 2
Section 2.0 Existing Conditions 8
2.1 Jurisdictional Waters 8
2.2 Upland Vegetation 10
Section 3.0 Impacts and Mitigation 15
3.1 EIR Mitigation Measures 15
3.2 Project Impacts and Compensatory Mitigation 17
Section 4.0 Revegetation Plan 19
4.1 Revegetation Design 19
4.2 Plant Selection and Installation 21
4.3 Construction Schedule 24
4.4 As-Built Drawings 26
4.5 Responsible Parties 26
4.6 Irrigation 26
4.7 Range of Contingency Measures 26
Section 5.0 Monitoring and Adaptive Management 28
5.1 Monitoring Approach and Performance Standards 28
5.2 Methods 29
5.2.1 Percent Cover 29
5.2.2 Survivorship 29
5.2.3 Health and Vigor 30
5.2.4 Overall Site Assessment 30
5.2.5 Photo-Documentation 30
5.2.6 Analysis of Results 31
5.3 Annual Monitoring Reports 31
Section 6.0 Plan Preparation Team 32
6.1 Project Sponsor 32
6.2 Mitigation and Monitoring Plan Preparation 32
Section 7.0 References 34

Exhibits

A. Existing Species Composition and Cover: Survey Notes A-1
B. Annotated Aerial Photographs and Table Showing Impacted 'Riparian' and Upland Trees B-1
C. Proposed Lower Bench Locations for Riparian Plantings C-1
D. SCVWD Invasive Plants List D-1

Tables

1. Existing State and Federal Jurisdictional Waters and Other Regulated Habitats in the Project Area 9
2. Project Impacts and Proposed Compensatory Mitigation 18
3. Planted Riparian Bench Locations – Lower Berryessa Creek 20
4. Planting Palette for Wetland Plants 21
5. Riparian Plant Palette 22
6. Hydroseed Plant Palette 23
7. Construction Schedule by Creek and Reaches 23
8. Habitat Mitigation Performance Standards 28
9. Health and Vigor Ratings 30

Figures

1. Project Area 5
2. Stream Reaches of the Lower Berryessa Creek Project Element 6
3. Stream Reaches of the Lower Calera Creek Project Element 7
4. West view of Lower Berryessa Creek (Reach A), looking downstream toward the Lower Penitencia Creek confluence 11
5. Northwest view of Lower Berryessa Creek (Reach D) with the Abel Street Bridge in the background 11
6. East-southeast view of Lower Berryessa Creek (Reach E), looking upstream, with N. Milpitas Drive in the background 12
7. Northwest view of Lower Berryessa Creek (Reach F), looking downstream near Paseo Refugio 12
8. West view of Lower Calera Creek Reach A 13
9. East view of Lower Calera Creek (Reach B), looking upstream from sidewalk on N. Milpitas Blvd. 13
10. East view of Lower Calera Creek (Reach B), looking upstream from Arizona Ave. 14
11. Typical Tree and Shrub Planting Diagram 24
12. Pole Stake Planting Detail 25

Section 1.0 Introduction

This Habitat Mitigation and Monitoring Plan (HMMP) has been prepared for the Santa Clara Valley Water District (SCVWD) to assure fulfillment of the habitat Mitigation Monitoring and Reporting Program (MMRP) adopted by the agency's Board of Directors;[1] and, to guide compensatory revegetation, creation, and revegetation activities for the Lower Berryessa Creek and Lower Calera Creek elements of the Lower Berryessa Creek Flood Protection Program. Together, the two program elements are referred to herein as the Project. The HMMP proposes mitigation and monitoring actions to ameliorate project-related impacts to jurisdictional waters and biological resources. Specifically, this HMMP prescribes a range of mitigation activities to offset temporary impacts to a total of:

- 5.21 acres of wetlands;
- 4.17 acres of open water habitat;
- 1.20 acres of upland woody vegetation on inboard levee slopes (being treated as 'riparian' habitat per CDFW instruction);
- 16.83 acres[2] of ruderal annual grassland habitat; and,
- jurisdictional waters regulated by the California Department of Fish and Wildlife, the Regional Water Quality Control Board, and the U.S. Army Corps of Engineers under various state and federal regulations.

The components of this HMMP will be incorporated into the plans and specifications of the Project to assure proper implementation under a separate installation contract.

1.1 LOCATION OF PROJECT ELEMENTS

The Lower Berryessa and Lower Calera Creek projects are located in a developed portion of eastern Santa Clara County within the City of Milpitas, (see **Figure 1**). Berryessa Creek is a part of the Coyote Watershed and is a major tributary of Coyote Creek. The Berryessa Creek watershed, including Lower Calera Creek, has a drainage area of approximately 22 square miles, draining a large area of the City of Milpitas and a portion of the City of San José. Berryessa Creek originates in the Los Buellis Hills of the Diablo Range, between Ed R. Levin County Park and Alum Rock Park, east of the City of San José. It flows westerly to Interstate 680 (I-680), then northward through the City of Milpitas to its confluence with Lower Penitencia Creek.

Lower Berryessa Creek

The Lower Berryessa Creek element extends upstream from the confluence of Lower Penitencia and Berryessa Creeks at the western end of Reach A, approximately 8,700 feet, to the downstream face of the bridge crossing of Calaveras Boulevard at the upstream terminus of Reach G, (see **Figure 2**). This element also includes a short segment (30 lf) of Penitencia Creek and a short segment (75 lf) of Tularcitos Creek, at their confluences with Lower Berryessa Creek, where some minor transitional work between old and proposed structures would occur. With the exception of the Milpitas Town Center to the south, this element is surrounded by single-family homes. Lower

[1] SCVWD Board Action Certifying the Final Program Environmental Impact Report, Adopting the Mitigation Monitoring and Reporting Program, and Findings of Fact and Statement of Overriding Conditions for the Lower Berryessa Creek Program. Resolution No. 11-78. December 13, 2011.

[2] Prior SCVWD calculations of ruderal annual grassland habitat within the project area incorrectly included areas of existing hardscape; the current acreages correct that mistake. Recent District calculations are also more accurate based upon recent project refinements in design.

Berryessa Creek is primarily a managed flood control channel, the majority of which is an earthen channel. Within this element, five bridges cross the creek:

- Abel Street Bridge
- Southern Pacific Railroad / Valley Transportation Authority Light Rail Bridge
- North Milpitas Boulevard Bridge
- City of Milpitas Pedestrian Bridge
- Hillview Drive Bridge

To accommodate the 1% annual probability of occurrence flow event, SCVWD proposes to raise the pedestrian bridge. The other bridges would remain at their existing elevations and headwalls would be added to the North Milpitas Boulevard Bridge to contain the 1% flow without overtopping the creek banks. The Lower Berryessa Creek element is divided into Reaches A through G, with Reach A at the downstream end of the creek section and Reach G at the upstream end.

Lower Calera Creek

The Lower Calera Creek element begins at the confluence of Berryessa Creek and extends upstream approximately 3,000 linear feet to the drop structure behind Milpitas High School, (see **Figure 3**). Calera Creek originates northeast of the City of Milpitas, in the Diablo Range in the northern part of the Ed R. Levin County Park. It flows westward to its confluence with Berryessa Creek and drains a watershed with an area of less than three square miles. Land uses surrounding the Calera Creek elements include single-family homes, schools, open space, and commercial or office parks. The Calera Creek element is divided into Reach A and B, with A at the downstream end. Within the program area, Calera Creek is primarily a managed flood control channel, the majority of which is an earthen, trapezoidal channel. Reach A of Lower Calera Creek is a concrete-lined U-shaped open box culvert. Three bridges cross the affected section of Calera Creek:

- Southern Pacific Railroad (SPRR) / Valley Transportation Authority (VTA) Light Rail Bridge
- North Milpitas Boulevard Bridge
- Arizona Avenue Bridge.

SCVWD proposes to retain these bridges at their existing elevations and add headwalls to each of these bridges to contain the 1% flow without overtopping the creek banks.

1.2 DESCRIPTION OF PROJECT ELEMENTS

The project is designed to increase the flow conveyance capacity of the channel during large flow events. The project would not change the watershed drainage area, flow patterns, or hydrology of the watershed. Less than bank full flows would continue to occur at the same volume and frequencies as before construction, which will provide sufficient water to sustain the restored wetlands and riparian habitat. In particular, tidal influences in Reaches A and B of Lower Berryessa Creek and Reach A of Lower Calera Creek and dry season low flows throughout the project area will be unchanged from before construction.

Lower Berryessa Creek

The improvements along Lower Berryessa Creek will include reconstructing levees and replacing existing levees with floodwalls. Levees along the northeast side of the channel will be reconstructed and raised for the entire length of this element, with the exception of a small segment upstream of the SPRR/VTA Bridge where the existing levee would be replaced with floodwalls. Floodwalls will

be constructed on the southwest side of the channel for the entire length of this project element. To improve access for maintenance activities, the project included maintenance roads on either side of the channel. For most of the creek length, the existing maintenance roads will be reduced from the existing 4 roads (i.e. high and low rods on either side of the channel) to 2. The improved channel will have an 18-ft wide low maintenance road surfaced with pre-fabricated cellular concrete mats inboard of the floodwall on the southwest bank of the creek channel. This low maintenance road will have turnouts at intervals to facilitate movement of large equipment. On the northeast bank of the creek, an 18-ft wide maintenance road surfaces with asphalt will be constructed on the crest of the reconstructed levee. This road will also serve as a pedestrian/bicycle trail, replacing an existing trail. Levees and floodwalls at the confluences of Lower Calera and Tularcitos Creeks with Lower Berryessa Creek would be modified to tie into the reconstructed and raised northeast bank levee.

The channel area of Lower Berryessa Creek (top of bank to top of bank) will increase 21.2% from 29.6 ac to 35.9 ac due to the replacement of the west levee with a floodwall. This additional channel area will be devoted to creation of compensatory riparian and wetlands habitat in excess of existing habitat areas, and of greater ecological value than existing. SCVWD will construct three low earthen benches within the Lower Berryessa Creek channel adjacent to the northeast levee, which will help create and maintain the low flow channel within the creek. SCVWD will plant native riparian vegetation on these benches to compensate for removal of existing scattered mostly non-native ornamental trees replace located on the existing levees. In addition, we will actively re-vegetate and create streambed wetlands adjacent to the low flow channel. Wetland habitat will be restored and created in all stream bed areas, except the low flow channel (i.e. open water habitat), the riparian benches, or existing concrete bed lining that will remain after construction. SCVWD will implement adaptive management measures, including salvage of existing plants and seeds, installation of plants/seeds/cuttings, robust monitoring of growth, and secondary planting if needed, to ensure that planted riparian and wetlands areas thrive and achieve long-term sustainability.

Lower Calera Creek

Proposed improvements to Reaches A and B of the Lower Calera Creek element will include constructing concrete floodwalls along each side of the existing channel. The total area of the channel (top of bank to top of bank) in these two reaches will increase by 37% from 3.48 ac to 5.53 ac, due to south bank levee reconstruction and widening along Reach B and construction of flood walls outside the existing U-frame channel in Reach A. The increases in channel area of 2.05 ac will primarily be devoted to a new maintenance path on the north bank in Reach B, and a new maintenance road on the south bank in Reaches A and B. Because these roads and path will be inboard of the flood walls, they are considered within the channel; however these roads and path will be several feet above the channel bed. In Reach A, the south bank maintenance road will be a new feature adjacent to the existing concrete-lined U-frame channel reach that currently lacks any maintenance roads. This road will be located outside of the existing concrete U-frame in Reach A. In Reach B, a new 18-ft wide maintenance road on the south bank and a new 5-ft wide maintenance trail on the north bank will replace existing levee crest roads on both banks, which are outside the channel. The remaining increase in channel area will be dedicated to creation of wetlands habitat in Reach B, increasing by 110% the area of freshwater/seasonal wetlands in the Lower Calera Creek channel bottom.

Within Reach A, from the confluence with Lower Berryessa Creek to North Milpitas Boulevard, the channel consists of an existing U-frame concrete bed and bank lining. The existing concrete U-frame in Reach A will remain, with the modifications and additions described below:

- On the north side of the channel, construct a new concrete flood wall outboard of the existing channel wall,

- On the south side, lower the existing U-frame wall by removing the uppermost two feet of concrete wall,
- Construct a new elevated 18-ft wide maintenance road surfaced with compacted decomposed granite, outboard of the lowered south bank concrete wall,
- Construct a new low concrete flood wall outboard of the new maintenance road, and
- Add new headwalls to the existing railroad bridge.

It should be noted that the above modifications would all occur outside the existing wetted perimeter of Reach A of Lower Calera Creek. The existing channel bed lining in Reach A would not be excavated or re-graded, but may require temporary dewatering to allow equipment access within the channel during removal of the upper 2 ft of the existing south bank U-frame wall. Dewatering of the channel would not be necessary to construct the new south bank maintenance road or the flood walls on either side of the existing U-frame channel.

Within Reach B, the existing earthen levee on the north bank will be retained, raised slightly and a concrete floodwall ranging in height from 2 to 5 ft constructed on its crest. Inboard of the north bank floodwall, a new 5-ft path will be surfaced with compacted decomposed granite. On the south bank, SCVWD will remove the existing earthen levee and reconstruct it to widen the channel bottom. A concrete floodwall with a height of 3 to 6.5 ft will be built on the reconstructed levee crest. Inboard of that levee, a new 18-ft wide road surfaced with compacted decomposed granite will provide channel access for maintenance purposes. The North Milpitas Boulevard and Arizona Avenue Bridges will be unchanged except for the addition of concrete headwalls to retain high flow within the channel. Other than headwalls, no changes to these existing bridges are proposed.

Lastly, improvements in Lower Calera Creek will include the grading of areas adjacent to the low flow channel to accommodate wetlands creation through installation of plants/seeds/cuttings. Planting will occur the same year as construction, and planted areas will be monitored and additional planting undertaken if revegetation is less than complete.

SOURCE: ESA

Lower Berryessa and Lower Calera Creek Creek Flood Protection Improvements Project . 201425

Figure 1
Project Area

0 1000
Feet

SOURCE: GlobeXplorer; ESA

Lower Berryessa and Lower Calera Creek Creek Flood Protection Improvements Project . 201425

Figure 2

Stream Reaches of the Lower Berryessa Creek Project Element

0 500
Feet

SOURCE: GlobeXplorer; ESA

Lower Berryessa and Lower Calera Creek Creek Flood Protection Improvements Project . 201425

Figure 3
Stream Reaches of the Lower Calera Creek Project Element

Section 2.0 Existing Conditions

The two primary creeks in the project area, Lower Berryessa and Lower Calera, and small sections of Lower Penitencia and Tularcitos Creeks within the project area, are managed earthen flood control channels, with some limited areas of existing structural protection and concrete bed linings. The vegetation / habitat classifications presented herein are based on field observations and on the California Department of Fish and Wildlife (CDFW)[3] List of California Terrestrial Natural Communities recognized by the California Natural Diversity Database (CNDDB).[4] This HMMP relies on A Manual of California Vegetation,[5] which maintains a detailed inventory of terrestrial natural communities based on the dominant plant species present. Wildlife habitats typically were classified and evaluated using the CDFG's A Guide to Wildlife Habitats of California.[6]

There are four main vegetation communities found within the Project area: brackish marsh; freshwater marsh; upland woody vegetation, including developed/landscaped (of which the inboard woody vegetation is being treated as 'riparian' by CDFW); and, ruderal/non-native annual grassland (see representative photos in **Figures 4-9**). Details on each community and its location within the project area are discussed below.

2.1 JURISDICTIONAL WATERS

Jurisdictional delineations of federal waters and wetlands have been conducted for Lower Berryessa,[7] and Calera creeks; the extent of jurisdictional waters of the U.S. for both creeks within the Project area has been verified by the U.S. Army Corps of Engineers (Corps)[8]. For the Lower Berryessa Creek project element, the federal jurisdictional delineation was conducted and verified in 2004.[9] However, verifications are valid for only five years. Therefore, the extent of jurisdictional waters of the U.S. for Lower Berryessa Creek was re-assessed and a request for verification was submitted to the Corps in 2010.[10] Wetland delineations of federal waters and wetlands for Lower Calera Creek were conducted and verified in 2005[11] and an extension of the verification was requested of the Corps in 2010[12].The below descriptions combine the results from these delineation efforts.

The majority of the jurisdictional waters of the U.S. located within the Project area are considered to be: freshwater marsh; brackish marsh; or, non-wetland "other waters" that are located within the ordinary high water mark (OHWM). One exception to the dominant freshwater and brackish marsh wetland types observed is a small seasonal wetland adjacent to a proposed construction staging area, located about the 75 ft from the east bank of Lower Berryessa Creek and upstream of the Abel Street Bridge.

State-regulated aquatic habitats may extend beyond those areas identified as federally jurisdictional. Under the Porter-Cologne Water Quality Control Act, all surface waters, including

---

[3] The California Department of Fish and Game (CDFG) formally changed its name to the California Department of Fish and Wildlife (CDFW) on January 1, 2013. In this document, references to literature published by CDFW prior to Jan. 1, 2013 are cited as 'CDFG'. The agency is otherwise referred to by its new name, CDFW.

[4] CDFG, 2010.

[5] Sawyer and Keeler-Wolf, 1995.

[6] Mayer and Laudenslayer, 1988.

[7] The extent of federally jurisdictional waters and wetlands for the Lower Berryessa Creek element, at its confluence with Lower Penitencia Creek, was not included in original delineations, but was estimated for approximately 30 linear feet of Lower Penitencia Creek based on aerial imagery and consistency with surrounding habitat classifications.

[8] Corps, 2004, 2005.

[9] ESA, 2004.

[10] ESA, 2010a,b.

[11] ESA, 2005.

[12] ESA, 2010c.

ground waters, are subject to state regulation, regardless of their connection to navigable waterways. Furthermore, areas adjacent to waters, where activities or the placement of pollutants could impair water quality or other beneficial uses, may also be subject to state regulation by the SFRWQCB. Under Sections 1600-1616 of the California Fish and Game Code, creeks, lakes and water bodies are protected as wildlife habitat. Jurisdictional waters and other regulated habitats are discussed by type, below, and are quantified and listed by type in **Table 1**, below.

TABLE 1
EXISTING STATE AND FEDERAL JURISDICTIONAL WATERS AND OTHER REGULATED HABITATS IN THE PROJECT AREA

Jurisdictional Waters	**Sq Ft[a]**	**Acres[b]**
Berryessa Creek		
Brackish/Freshwater Marsh/Seasonal Wetland	201,377	4.62[c]
Other Waters of the U.S. (Berryessa Creek)	158,341	3.64
Berryessa Creek Jurisdictional Waters Total	*359,718*	*8.26*
Calera Creek		
Brackish/Freshwater Marsh/Seasonal Wetland	24,655	0.57
Other Waters of the U.S. (Calera Creek)	21,070	0.48
Calera Creek Jurisdictional Waters Total	*45,725*	*1.05*
Penitencia & Tularcitos Creek*s*		
Brackish Marsh	1,224	*0.03*
Other Waters of the U.S.	2,029	*0.05*
Penitencia & Tularcitos Creek*s Jurisdictional Waters Total*	3,523	*0.08*
Total Jurisdictional Waters	**409,028**	**9.39**
Other Regulated Habitats Below Top-of-Banks		
Adjacent Upland Vegetation		
Inboard Levees (mostly non-native landscape trees and shrubs, being treated as 'riparian' by CDFW)	52,476	1.20
Developed and Ruderal/Non-Native Grassland	733,114	16.83
Total of Other Regulated Habitats	**1,194,618**	**18.03**
Total Jurisdictional Area	**1,446.192**	**27.42**

a Square feet were calculated using GIS (ArcMap 9).
b Acreages were calculated using GIS (ArcMap 9) and were rounded to the nearest one-hundredth acre.
c Includes 0.015-acre isolated wetland near Abel Street that will not be impacted.

SOURCES: ESA, 2004, 2005, 2010a,b,c

Brackish Marsh

Brackish marsh wetlands are located in Lower Berryessa Creek, downstream from the railroad crossing at Abel Street. The brackish marsh wetlands in the Project area are a result of tidal influx, and are distinct from the wetlands upstream of Abel Street in that they support both a greater percentage of (and greater cover by) perennial species. Brackish marsh vegetation occupies the shallow margins of the channel and, in some locations, narrow bars in the middle of the channel.

Vegetation is dominated by California bulrush (*Schoenoplectus californicus*) and water smartweed (*Polygonum* sp.); both of which are obligate wetland species. Willow-leaf dock (*Rumex salicifolius*), common water plantain (*Alisma triviale*), and floating water primrose (*Ludwigia peploides*) occur as associates.

Freshwater Marsh

Within the project area, freshwater marsh is the dominant form of wetland and includes both vegetated areas and pockets of open water within the channels. Freshwater marsh occurs along the edges of the creek channels and occupies most of the channel in reaches with sediment accumulation, resulting in reduced water flows and the establishment of more freshwater marsh vegetation. Open water areas tend to occur in deeper waters within the low-flow areas of the channel. Since the creeks are managed flood control channels, the location of freshwater marsh and open water habitats are dynamic and shift from year to year depending on annual rainfall.

Dominant freshwater marsh species, including floating water-primrose and watercress (*Nasturtium officinale*), are found throughout the Lower Berryessa Creek corridor. Barnyardgrass (*Echinochloa crus-galli*), a non-native annual grass, is also an occasional dominant species. Stands of cattail (*Typha latifolia* and/or *T. angustifolia*) and California bulrush are associated species and are found in limited areas within the program area.

2.2 UPLAND VEGETATION

Upland habitat types are predominantly characteristic of developed and landscaped areas, as well as sparsely vegetated, ruderal, non-native grasslands. A summary of the habitat is provided below; and, a more comprehensive floristic description is provided, by reach, in **Exhibit A** Existing Species Composition and Cover: Survey Notes, attached. Refer to **Figures 4-10** for representative images of the vegetation in and along Lower Berryessa and Lower Calera creeks.

Upland Woody Vegetation on Inboard Levees / Riparian

No native riparian habitat exists in the Lower Berryessa Creek and Lower Calera Creek Project However, upland woody vegetation comprised primarily of discontinuous, scattered tree and shrub plantings and exotic invasive species is found on the inboard and outboard slopes of the existing levees of Lower Berryessa Creek (see **EXHIBIT B**, which presents annotated Aerial Photographs and a Table depicting 'Riparian' and upland trees). The SCVWD considers these habitats, if located on the inboard slopes, as 'riparian' habitat consistent with direction from CDFW.

Developed / Landscaped

Developed or landscaped areas in the Project area typically contain non-native or ornamental species. Generally these areas support no native vegetation, although there are several city parks adjacent to sections of Lower Berryessa Creek where ornamental cultivars, including ceanothus (*Ceanothus* sp.) and holly oak (*Quercus ilex*) are found.

Ruderal / Non-Native Grassland

Ruderal communities consist of weedy vegetation that typically occurs in areas where soils and native vegetation have been significantly disturbed by activities such as vegetation management, including herbicide applications and mechanical methods, resulting in a predominance of non-native species. This community, which also could be classified as non-native annual grassland, occurs above the ordinary high water mark along the levee banks (inboard levee slopes) and along the outside of the levee maintenance roads (outboard levee slopes).

This habitat type is represented in the Project area by non-native annual grasses and an assortment of non-native forbs. These species include wild oats (*Avena barbata*), annual ryegrass (*Festuca perennis*), bristly oxtongue (*Helminthotheca echioides*), poison hemlock (*Conium maculatum*), yellow star-thistle (*Centaurea solstitialis*), and wild radish (*Raphanus raphanistrum*).

Figure 4. West view of Lower Berryessa Creek (Reach A), looking downstream toward the Lower Penitencia Creek confluence.

Figure 5. Northwest view of Lower Berryessa Creek (Reach D) with the Abel Street Bridge in the background.

Figure 6. East-southeast view of Lower Berryessa Creek (Reach E), looking upstream, with N. Milpitas Drive in the background.

Figure 7. Northwest view of Lower Berryessa Creek (Reach F), looking downstream near Paseo Refugio.

Figure 8. West view of Lower Calera Creek Reach A

Figure 9. East view of Lower Calera Creek (Reach B), looking upstream from sidewalk on N. Milpitas Blvd.

Figure 10. East view of Lower Calera Creek (Reach B), looking upstream from Arizona Ave.

Section 3.0 Impacts and Mitigation

All anticipated impacts to fish, wildlife, and plant resources in the Project area will be temporary only. Project implementation will result in the widening of existing channel cross-sections and the increase in overall channel area, thereby providing an opportunity for increased channel habitat in the form of open waters, riparian habitat, and wetlands (including jurisdictional waters and wetlands), while also time improving flood protection and improved maintenance access for channel maintenance purposes. At the conclusion of project construction, native streambed soils will be re-installed in the channel to the extent practicable, natural streambed contours will be established, facilitating restoration/creation of open water habitat. The SCVWD will also actively plant riparian and wetland species, to expedite the revegetation of these habitats and compensate for temporary project impacts.

The SCVWD considers the proposed mitigation as sufficient to address the anticipated temporary impacts, when viewed in light of:

1) avoidance of all permanent impacts;
2) widening of channel which creates additional area for active revegetation of wetlands and riparian habitats,
3) proposed compensatory mitigation through the active establishment of wetland habitat within the creek bed and riparian habitat on low earthen benches created within the creek channel
4) the well-founded expectation of successful habitat revegetation and creation via facilitation of natural re-growth, combined with active installation of seeds/plants/cuttings (documented in the SCVWD's Instream Wetland Vegetation Regrowth Study[13]).

3.1 EIR MITIGATION MEASURES

Mitigation measures developed for the Environmental Impact Report (EIR; ESA, 2011) provide guidance for compensatory mitigation of project impacts to sensitive habitats within and adjacent to Lower Berryessa Creek and Lower Calera Creek. The relevant EIR mitigation measures are presented below.

Jurisdictional Waters

Mitigation Measure 3.D-4b: *Compensate for Loss[14] [of Jurisdictional Waters]*

"Prior to construction of the Program, the District shall obtain permits and authorizations from the Corps, SFBRWQCB, and CDFG. Consistent with the terms and conditions of these permits and authorizations, the District shall compensate for the unavoidable loss of jurisdictional waters at a minimum of a 1:1 ratio. Compensation may be provided by one or more of the following methods: 1) on-site creation or restoration; 2) off-site creation, or restoration; or, 3) payment to an approved wetland mitigation bank. A mitigation and monitoring plan (MMP) shall be developed that describes how temporary and permanent impacts shall be compensated for, including active seeding or planting in the event that natural recruitment does not occur as anticipated within the first two years following construction, and shall present a feasible revegetation plan with monitoring protocols to ensure the Program does not result in a net loss of jurisdictional waters."

[13] Instream Wetland Vegetation Regrowth Study, Fourth Annual Report: Results for 2001. July 2002. This study found that wetlands within disturbed channels typically return within one to two years after disturbance.

[14] Lower Berryessa Creek Program, Final Environmental Impact Report (SCH#2007092084). December 2011.

As detailed below, in 3.2 *Project Impacts and Compensatory Mitigation*, the District has modified this EIR compensatory mitigation measure to go beyond natural recruitment and proposes to proactively create and restore wetlands and riparian habitat immediately following each season of construction. SCVWD will restore the existing brackish and freshwater/seasonal wetlands and increase their acreage compared to existing. The wetlands acreage in Lower Berryessa Creek will increase from 4.61 ac to 5.13 ac in Lower Berryessa Creek and from 0.57 to 1.2 ac in Lower Calera Creek. The wetlands in Lower Penitencia and Tularcitos Creeks will remain the same as existing at 0.03 ac. Overall, the area of jurisdictional wetlands will increase from the existing 5.21 ac to 6.33 ac, an increase of 21%. The compensation ration for temporary impacts to wetlands will be 1.2:1.

The project will recreate the existing low flow channels of Lower Berryessa and Lower Calera Creeks after construction is complete. The area of open water habitat, including the proportion subject to tidal influence, will be unchanged from the pre-construction conduction. Compensation ratio for open water habitat in the project area, and in each individual creek, will be 1:1.

Upland Vegetation

Mitigation Measure 3.D-6a: *Tree and Shrub Replacement*[15]

"Prior to the start of construction, the District shall have a qualified biologist conduct a survey to identify the trees and shrubs that would be removed during construction. Trees shall be identified by species and a determination shall be made of areal coverage of the tree canopy. The District shall prepare a tree replacement plan that requires planting of: 1) trees of species similar to those removed, or of a native species; and, 2) complimentary shrubs. Replacement shall be at a minimum, anticipated 1:1[16] areal coverage ratio at maturity. Following initial excavation and earthwork, tree and shrub replacement shall include tree, shrub, and other plantings in suitable areas located off of levee slopes. The plantings shall reflect the structure and density of trees and shrubs as identified in the preconstruction survey, such that the overall character, and quality, of views from the creek roads/trails are restored on-site, to the extent feasible. Where planting trees and shrubs within the same site, or within the District's ROW, is not feasible (e.g. on the levee slope within the District ROW that could reduce channel capacity, as described in Section 2.E, Program Description [of the EIR] where soils within the ROW would not support plantings; or where plantings would compromise the objectives of the Program), the District shall coordinate with the City of Milpitas to find suitable, alternative location(s) for the replacement plantings. The District shall monitor tree replacement plantings annually for a minimum of three years after completion of construction to ensure establishment of the plantings and, if necessary, shall replant to ensure the success of the replacement plantings."

In agreement with the CDFW, and based upon the project size, areal extent of tree coverage, and low-quality of the existing inboard slope vegetation, the District has complied with the above condition through the remote evaluation tree canopy cover using aerial imagery and ground truthing (see **EXHIBIT B**, Annotated Aerial Photo Showing Impacted Upland Vegetation).

As detailed below, in 3.2 *Project Impacts and Compensatory Mitigation*, the District has modified this EIR compensatory mitigation measure to go beyond provision of compensatory mitigation at a 1:1 ratio, and is proposing a ~ 2:1 compensatory mitigation ratio, to be accomplished through the

[15] Ibid.

[16] As noted in the text, above, taken directly from the FEIR, the mitigation ratio to which the SCVWD committed was 1:1. However, in response to a comment from CDFW in their Incomplete Notification letter, dated May 29, 2013, the low bench to be built as part of the Lower Berryessa Creek project will be planted with riparian vegetation, as described in Section 4.0., in an amount sufficient to satisfy CDFW's request for mitigation at a ~2:1 ratio (1.93:1, based on the creation of 2.32 acres to mitigate for 1.20 acres of impact).

active planting of riparian species on created in-channel low earthen benches, immediately following construction.

3.2 PROJECT IMPACTS AND COMPENSATORY MITIGATION

Construction of the proposed flood improvements to Lower Berryessa, Lower Calera, Lower Penitencia, and Tularcitos Creeks will result in unavoidable temporary impacts to approximately 5.21 ac of existing jurisdictional brackish and seasonal wetlands; 4.17 acres of existing non-vegetated, open water habitat, including tidal waters; and 1.20 acres of existing riparian/upland woody vegetation (see **EXHIBIT B**); and 16.83 ac of adjacent ruderal, annual grassland habitat, also from the Lower Berryessa Creek project-level element and found on the inboard slopes of the existing levees,[17] for a total of 27.4 acres of regulated habitat. All impacts are considered temporary, as there will be no net loss of riparian or in-stream habitat resulting from project implementation. and all areas will be actively revegetated within one year of completion of construction on teach channel reach. **Table 2** below provides a breakdown of impacted aquatic and upland habitats in Lower Berryessa and Lower Calera Creeks along with acreage of habitats that will be established following project completion, and the resulting mitigation ratios.

Mitigation for temporary project impacts to jurisdictional wetlands and waters of the U.S. will be carried out at each affected Reach of Lower Berryessa Creek and Lower Calera Creek within one year of the construction disturbance period. In-channel construction will occur between May (June[18]) 15 and October 15 and restoration of each disturbed project reach will take place during the subsequent wet season. Wetland, riparian, and upland habitats will be established in conformance with the Revegetation Plan (Section 4.0).

Project construction would result in a 1.15-acre net increase in jurisdictional waters (expected to consist of wetland habitats), through the excavation and widening of the channel of Lower Berryessa Creek and Lower Calera Creek. Project construction would also result in a 1.12-acre net increase in riparian habitat (according to the CDFW definition), through the creation and planting of low earthen benches within the widened channel of Lower Berryessa Creek. Channel widening will be accomplished by replacing the existing earthen levee on the southwest bank of Lower Berryessa Creek with a concrete floodwall, and relocating the existing earthen levee on the south bank of Lower Calera Creek outward from the channel. The result will be an increase in channel widths, depths, and hydraulic capacity.

[17] Upland landscaped vegetation located on the outboard slopes would not be considered an impact to CDFW-regulated resources, and would be mitigated off-site, in accordance with mitigation commitments made in the FEIR, which would address the aesthetic impact of this landscaped vegetation loss.

[18] To avoid potential construction related impacts to longfin smelt in tidally-influenced reaches, dewatering and construction within Reaches A and B of Lower Berryessa Creek and Reach A of Lower Calera Creek are not permitted to begin before June 15.

TABLE 2
PROJECT IMPACTS AND PROPOSED COMPENSATORY MITIGATION

Habitat/Parameters	Lower Berryessa Element	Lower Penitencia/ Tularcitos Creek	Lower Calera	Overall Project
Wetlands				
Impact				
Linear feet	7,600	75	2,000	9,675
Acres	4.61	0.03	0.57	5.21
Mitigation				
Linear feet	7,800	75	2,000	9,875
Acres	5.13	0.03	1.2	6.36
Riparian				
Impact				
Linear feet	1,900	0	0	1,900
Acres	1.2	0	0	1.2
Mitigation				
Linear feet	3,000	0	0	3,000
Acres	2.32	0	0	2.32
Open Water				
Impact				
Linear feet	8,700	105	3,000	11,805
Acres	3.64	0.05	0.48	4.17
Mitigation				
Linear feet	8,700	105	3,000	11,805
Acres	3.64	0.05	0.48	4.17
Upland Ruderal/Grass				
Impact				
Linear feet	7,700	75	2,100	9,875
Acres	14.79	0.03	2.01	16.83
Mitigation				
Linear feet	7,800	75	2,100	9,975
Acres	20.5	0.03	1.68	22.21

Section 4.0 Revegetation Plan

4.1 REVEGETATION DESIGN

The revegetation design includes (1) reestablishment and new creation of open water and wetlands within active stream channels of Lower Berryessa and Lower Calera Creeks, (2) establishment of improved riparian habitat on low earthen benches adjacent to the low flow channel within Lower Berryessa Creek, and (3) hydroseeding of upland areas and levee slopes with a native grass species mix to prevent erosion and provide upland habitat. These components are described in greater detail below.

Wetlands and Open Water

Compensation for the temporary removal of 4.17 ac of open water habitat will be achieved through re-watering of the newly created low flow channel, establishing a total of 4.17 ac of open water habitat at the end of the project. The hydrology and drainage area of the creeks in the project area will remain unchanged. The post-construction channels of Lower Berryessa and Lower Calera Creeks will contain graded low-flow channels approximating the dimensions of the existing low-flow channels. Each creek reach will be re-watered at the end of the construction season, limiting the duration of impact to open water habitat in each creek reach to one construction season (i.e. about 4.5 months). The proposed Compensation ratio is 1:1 (proposed:existing).

Compensation for the temporary removal of 5.21 ac of existing brackish and freshwater wetlands would be accomplished through active planting and adaptive management to establish 6.36 ac of wetlands. The proposed compensation ratio for these temporary impacts is 1.2:1 (proposed:existing). Areas in the creek beds adjacent to the low-flow channels of Lower Berryessa and Lower Calera Creeks will be actively re-vegetated The planting areas will be excavated to the design depth during channel reconstruction. Immediately after each creek reach is dewatered, wetlands plants and soil will be salvaged from the active creek reach. Existing perennial wetland plants will be salvaged first, making sure to harvest all rhizomes and root mass. The plant material will be kept moist at the staging area, so that roots and rhizomes do not dry out. The uppermost 6 to 12 inches of topsoil will be salvaged from existing wetlands and stored at the construction staging areas for re-use at the site, to the extent practicable. Salvaged wetlands plant and soils will be stored at project staging areas for the duration of the construction period, roughly 4.5 months. Dry topsoil will be stored on an existing pavement or plastic sheeting (if on unpaved soil) at the staging areas, to prevent contamination by seeds present at the staging area. The salvaged wetland topsoil is expected to contain substantial seed from existing vegetation, as well as a high organic content, that will promote rapid revegetation when re-spread at the wetlands re-establishment and creation areas.

Wetland areas will also be actively planted with native perennial wetland vegetation from container stock, and local cuttings, to supplement the salvaged plants from the channel and topsoil seed bank. Container stock can be obtained from local native plant nurseries or contract harvested and grown by a local nursery utilizing seed and propagules from the Coyote Creek watershed. The revegetation areas within the newly constructed creek reaches will be planted and adaptively managed to promote re-establishment of habitat, including a 22% increase in area of wetlands habitat compared to existing area.

Riparian Benches

Compensation for the removal of 1.20 acres of mostly exotic landscape trees and shrubs located in upland habitat on the inboard levee slopes (and deemed ‘riparian’ by CDFW) will be accomplished through the value-added installation of riparian vegetation on low, earthen benches created within

the channels. The planted benches will occupy a total of 2.32 acres within the improved channel cross-sections of Reaches D, E, and G of Lower Berryessa Creek. No riparian vegetation exists or would be affected in Lower Calera Creek (or the small affected sections of Lower Penitencia or Tularcitos Creek); riparian benches are not proposed for those creeks. The proposed locations of the earthen benches in Lower Berryessa Creek are shown on plan sheets C-1 through C-7 of **EXHIBIT C** and summarized in **Table 3**, below. A conceptual cross-section of the riparian benches is also provided in sheet 11 of EXHIBIT C. Care will be taken during excavation and soil salvage activities, to minimize disturbance of the existing subsoil structure. To create the necessary micro-topography for re-establishment and creation of new riparian habitat, coarse channel deposits salvaged during construction will be placed above the clay substrate with a 1 to 2% slope towards the low-flow channel. In addition, because it is expected that some of the salvaged native soils from the upper reaches of Lower Berryessa and Lower Calera creeks may not have the appropriate soil texture, soil harvested from other SCVWD properties would be imported for use in establishing the proper texture to create the riparian benches. The underlying clay will minimize downward percolation of moisture and promote lateral movement within the overlying coarse sediments, delivering water to the planted vegetation. Newly planted materials will be irrigated if necessary to promote survival and growth, as described in section 4.5.

TABLE 3
PLANTED RIPARIAN BENCH LOCATIONS – LOWER BERRYESSA CREEK

Area	Reach	Plan Sheet #	Approx. Station	Approx. Station	Length (ft)	Bench Width (ft)	LOW BENCH FOOTPRINT AREA	
							Ft^2	Acre (AC)
1	D	C4 and C-5	38+00	53+83	1,583	34	53,822	1.24
2	D,E	C6 and C-7	59+04	77+04	1170	31	36,270	0.83
3	G	C-7	76+00	79+50	350	31	10,850	0.25
Total low bench length					3,103			
Total low bench area							100,942	2.32

The benches will be located on the channel bed at an elevation of 1 to 2 ft above the low-flow water surface and in close proximity to the low-flow channel. Riparian vegetation will be planted on the bench at a distance of 15 feet from the base of the levee to avoid levee damage from tree roots and adhere to U.S. Army Corps of Engineers policy. Tree canopies will be allowed to grow over the 15-ft setback zone, and a full canopy over the riparian bench will grow in the long term. Each bench will be stabilized with a combination of jute netting covering the surface benches and ½ ton rock riprap at the perimeter of the benches as depicted in plan sheet 11 (EXHIBIT C). The rock riprap will form an erosive barrier at the inner edge of the benches and will anchor the jute netting, therefore reducing the potential for erosion of the benches. Rock riprap placed at the stream-side perimeter of the riparian benches will be buried in the channel bottom to a depth of at least one-half the rock's diameter. Riparian vegetation (several species of willows) will be planted and maintained adjacent to and between the partially buried rocks.

Herbaceous Uplands

The project will temporarily disturb the existing 16.83 acres of ruderal/upland habitat located on inboard levee slopes. This habitat contains all project areas other than open water, wetlands, and riparian habitat, and hardscape elements (e.g. roads surfaced with cellular concrete mats (CCMs)

or compacted decomposed granite, concrete bed linings, grouted and ungrouted rock riprap) and will be hydroseeded with a naturalized see mix, and at a minimum, restored to pre-construction conditions. The area of post-construction uplands will be 22.21 ac as compared to the 16.83 ac of impacted upland grass/ruderal. A species list and hydroseeding notes for upland areas are included in section 4.2 (Herbaceous Plant Installation).

4.2 PLANT SELECTION AND INSTALLATION

Wetland Plant Installation

The objective is to replace and increase wetlands habitat values in the long-term by actively revegetating wetlands in the channels of Lower Berryessa and Lower Calera Creeks and managing them to achieve long-term sutainability. Native, perennial wetland plants will be installed in Lower Berryessa Creek and Lower Calera Creek within the channel, once construction work in the channel is complete and previously slavaged and stored topsoil has been respread. The total wetland planting area encompases 5.16 ac of Lower Berryessa Creek (including the 0.03 ac planting area in Lower Penetencia Creek) and 1.20 ac of Lower Calera Creek, and consists of the entire stream bed of these channels outside of the low flow channel, riparian benches, and areas of retained existing concrete bed linings. Wetlands re-establishment and creation will occur between the low-flow channel and the levees on the northeast side of Lower Berryessa Creek and the north side of Lower Calera creek. Wetlands habitat will be re-established in Lower Berryessa Reaches A, B, C, D, and G and Lower Calera Reaches A and B.

Wetlands will be revegetated by spreading salvaged topsoil rich in annual seeds in these areas, and then installing cuttings and container plants. **Table 4** presents the planting palette for the wetland areas adjacent to the low-flow channel. Container stock is intended to supplement the perennial wetland vegetation that is salvaged from the channels prior to construction. Herbaceous perennial plants ranging from obligate[19] wetland species to facultative[20] wetland species are proposed. Plants will be arranged within the wetland planting areas with obligate wetland species closest to the low flow channel and facultative wetland species at the upper potions of the planting area, farther from the open water. The result will be a mosaic of annual and perennial wetlands species.

TABLE 4
PLANTING PALETTE FOR WETLAND PLANTS

Species Name	Common Name	Container size	Wetland status
Bolboschoenus maritimus	Alkali bulrush	Tree pot (1 gallon)	Obligate
Schoenoplectus californicus	California bulrush	Tree pot (1 gallon)	Obligate
Juncus balticus	Baltic rush	Leach tube (LT5)	Facultative Wetland
Juncus effuses	Spreading rush	Leach tube (LT5)	Facultative Wetland
Baccharis douglasii	Salt marsh baccharis	1 gallon	Facultative Wetland
Euthamia occidentalis	Western goldenrod	1 gallon	Facultative Wetland
Elymus triticoides	Creeping wildrye	Plug	Facultative
Typha ssp.	Cattail	1 gallon	Obligate

[19] Obligate wetland plants are those that occur only in wetlands and require saturated soil conditions.
[20] Facultative plants are those that occur in both wetland and upland habitats and can persist in saturated or well-drained, dry soils.

Riparian Plant Installation

Riparian benches adjacent to the main channel of Lower Berryessa Creek will be planted with a mix of woody riparian tree and shrub species with herbaceous patches for structural diversity (**Table 5**). Willow and mulefat stakes will make up the bulk of the planting material and can be harvested locally. Container stock of western goldentop, California aster, California rose, California blackberry, elderberry and creeping wildrye will supplement the willows and mulefat.

TABLE 5
RIPARIAN PLANT PALETTE

Species Name	Common Name	Propagule Type
Salix lasiolepis	Arroyo Willow	Cutting
Salix laevigata	Red Willow	Cutting
Baccharis salicifolia	Mulefat	Cutting
Baccharis douglasii	Salt marsh baccharis	1 gallon
Sambucus nigra ssp. *caerulea*	Sandbar willow	4”x14” tree pot
Elymus triticoides	Creeping wild-rye	Plugs
Euthamia occidentalis	Western goldentop	1 gallon
Rosa californica	California wildrose	Dee Pot
Rubus ursinus	California blackberry	1 gallon
Symphyotrichum chilense	California aster	1 gallon

Riparian benches range in width up to 32 feet and planting arrangement of the woody species will be random. Woody vegetation cannot be planted within a minimum planting distance of 15 feet from the base of the levee in order to protect levee structure, based on requirements from the Corps (Corps, 2010). However, tree canopies can grow over this setback area and shade it.

Container Stock

The number of container plants required will be determined in the construction plans and specifications. All container-grown plant stock will be of local origin. The following recommendations are provided to ensure successful planting and establishment within the mitigation areas.

- Whole plant installation shall occur between October 1st (or the onset of the rainy season, if later) and December 1st to take advantage of winter rains and moist soil conditions;
- Cuttings will be installed during December and January when plants are dormant; and
- Planting layouts will be finalized in the field by the Revegetation Monitor. Plant locations and species will be indicated with colored pin flags.

At the time of planting, the Revegetation Monitor will coordinate the placement of flags to denote planting sites for individual plants.

Willow Stakes or Pole Cuttings

Willow and mulefat stakes will be installed on the riparian benches, described above. Cuttings will be taken from a variety of large, healthy shrubs and trees in the Coyote Creek watershed in proximity to the Project area, to the extent practicable. Native willows are present both up and

downstream of the project sites within the Coyote Creek watershed. Potential suitable locations for harvesting willow stakes include, but are not limited to:

- A stretch of Coyote Creek/Coyote Creek trail between McCarthy on the north and 237 on the south.
- Lower Berryessa Creek north of Milmont Drive.

Herbaceous Upland Plant Installation (Hydroseed)

Hydroseeding of native upland grasses is proposed for the levee banks and buffer areas between the riparian benches and levees. A plant palette for native grass hydroseed mix is provided in **Table 6**, below. Application will occur as close as possible to the beginning of the rainy season. The hydraulic mixture (seed and mulch slurry) will not be applied when rainfall is anticipated within 24 hours.

TABLE 6
HYDROSEED PLANT PALETTE

Species Name	Common Name	Rate (lbs./acre)	Propagule Type
Bromus carinatus	'S. F. Bay Area' California brome	10	Pure Live Seed (PLS)
Elymus glaucus	'Berkeley' Blue wild-rye	12	PLS
Hordeum brachyantherum ssp. californicum	Prostrate California barley	16	PLS
Vulpia microstachys	Three Weeks fescue	5	PLS

Hydraulic equipment will be used to provide a uniform application of the seed and mulch slurry using water as a carrying agent. The seed and mulch will be mixed and applied simultaneously. The mix will be conditioned for a minimum of 15 minutes and maximum of 30 minutes before application (minimum conditioning time may vary with mulch manufacturer's specifications; seed should not rest in the water slurry for more than 30 minutes prior to application). The mixture will be applied so that no gaps exist between the hydromulch matrix and the soil, and there are no holes greater than one millimeter in the matrix.

4.3 CONSTRUCTION SCHEDULE

Construction of the flood protection improvement project is expected to occur during the dry season construction period [May (or June) 15 - October 15] over three years, as shown in **Table 7**.

TABLE 7
CONSTRUCTION SCHEDULE BY CREEK AND REACHES

Creek	Reaches	Construction Year
Lower Berryessa	A (downstream of Abel Street Bridge)	2015
	B (downstream of Abel Street Bridge), C, and D (upstream of Abel Street Bridge)	2016
	E, F, and G (upstream of Abel Street Bridge)	2017
Lower Calera	A and B	2017
Lower Berryessa/Calera	Unconstructed reaches, as needed	2017-2018

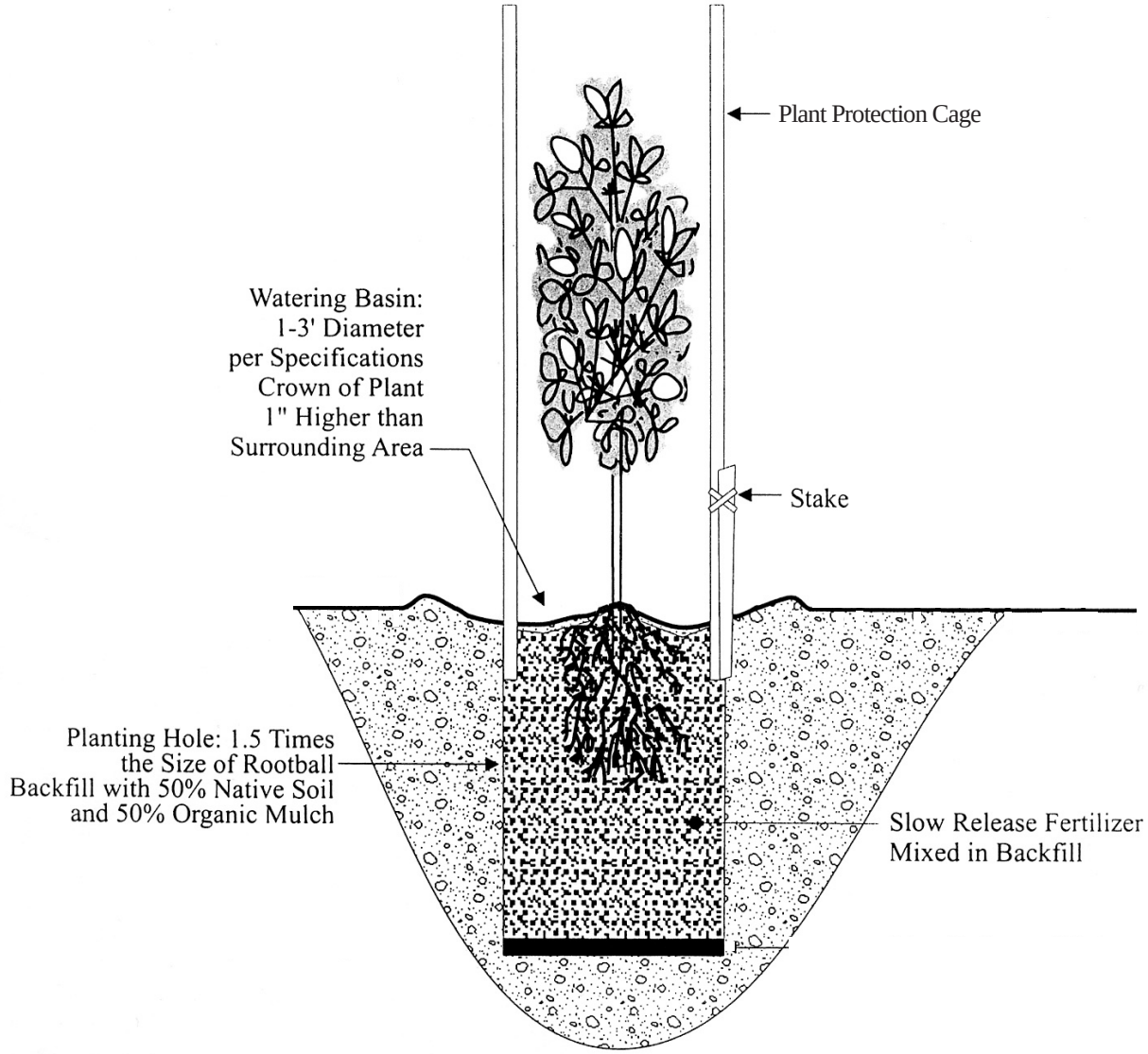

PLANTING NOTES:
1. PLANTING HOLES TO BE DUG ONE AND A HALF TIMES LARGER THAN ROOTBALL.
2. PROVIDE FOUR INCH DOWNSLOPE BERM TO RETAIN WATER ON SLOPES.

Figure 11
Typical Tree and Shrub
Planting Specifications

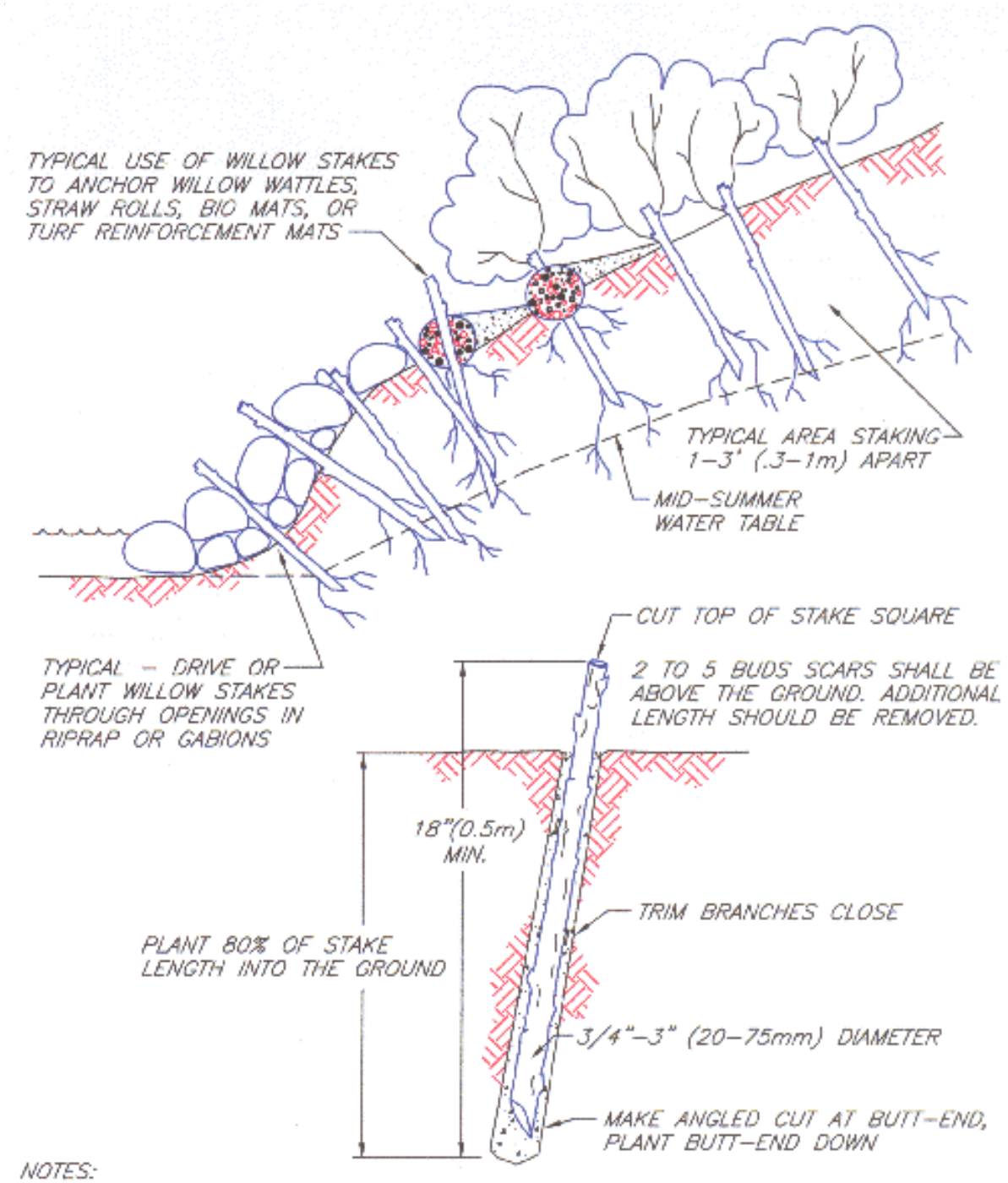

NOTES:
1. HARVEST AND PLANT STAKES DURING THE DORMANT SEASON.
2. USE HEALTHY, STRAIGHT AND LIVE WOOD AT LEAST 1 YEAR OLD.
3. MAKE CLEAN CUTS AND DO NOT DAMAGE STAKES OR SPLIT ENDS DURING INSTALLATION, USE A PILOT BAR IN FIRM SOILS.
4. SOAK CUTTINGS FOR 24 HOURS (MIN.) PRIOR TO INSTALLATION.
5. TAMP THE SOIL AROUND THE STAKE.

NOT TO SCALE

SOURCE: John McCullah, Salix Applied Earthcare, 2000

Figure 12
Pole Stake Planting Detail

Wetland, riparian, and herbaceous upland restoration in each reach is expected to occur during the wet season following completion of construction in that reach. To avoid potential impacts to longfin smelt, which may utilize tidally-influenced portions of Lower Berryessa Creek and Lower Calera Creek in the spring and fall, construction in Reaches A and B of Lower Berryessa Creek (planned for 2014 and 2015) and in Reach A of Lower Calera Creek (planned for 2016) would not begin earlier than June 15.

4.4 AS-BUILT DRAWINGS

As-built drawings of the installed mitigation will be provided with the first annual monitoring report.

4.5 RESPONSIBLE PARTIES

Prior to implementation of this MMP, SCVWD will designate one or more Revegetation Monitors. This person or persons will be a qualified biologist, restoration ecologist, or restoration consultant who will supervise the implementation of mitigation installation and long-term monitoring. The Revegetation Monitor shall be responsible for:

- Interpreting plans in the interest of a successful revegetation effort;
- Supervising site preparation;
- Approving all plant materials prior to installation;
- Overseeing field placement of plants, including placement of flags (color-coded by species) denoting locations for individual plants;
- Overseeing installation, including training and directing planting crews if necessary;
- Monitoring revegetation progress and reporting to SCVWD and/or regulatory agencies, as necessary;
- Providing guidance and instruction for ongoing maintenance to ensure the long-term, successful establishment of the plantings. If necessary, the Revegetation Monitor will train crews in the methods represented in this plan;
- Guiding remedial actions as needed to replace plants, so that performance standards and permit conditions are met; and
- Ensuring that non-native species removal complies with all state and federal requirements and training maintenance crews in proper techniques and best management practice for weed control, if necessary.

4.6 IRRIGATION

If necessary, a temporary irrigation system shall be installed, or temporary watering will be provided by a water truck for the first two to three years following installation.

4.7 RANGE OF CONTINGENCY MEASURES

In the event that riparian or wetland planting areas do not meet performance standards as outlined in this document, contingency measures will be implemented to maintain regulatory compliance. Contingency measures may include on-site remediation of wetland or riparian areas and additional plantings. On-site remediation would occur if plant survival and other performance standards are not met during any point in the monitoring period.

Remedial actions can also include reseeding or replanting of riparian or wetland habitats if it is determined that the vegetation component does not, and is unlikely to meet, the performance standards described in this MMP and in the regulatory permits for the project. Erosion control measures would be carried out as necessary to address slope instability and sediment transport within the creek corridor and planting areas.

The removal and/or eradication of non-native vegetation may be needed as an on-site remediation measure. The control of undesirable species would serve to improve habitat quality within all habitats.

The performance standards will provide a basis for determining the need for possible corrective actions. However, given the potential vagaries of weather patterns and other environmental conditions beyond the control of the project, failure to attain one or more of the performance standards will not necessarily imply that the mitigation has failed. Rather, the entire set of monitoring results will provide a basis for discussion with regulatory agencies as to whether remedial actions are warranted. Despite failure to attain one or more specific performance standards, monitoring results may suggest that the mitigated areas are developing properly, overall performance goals are being met, and that no corrective intervention would be warranted. Most importantly the performance standards are intended to be used and interpreted based on professional judgment of the Revegetation Monitors in consultation with regulatory agency staff.

Section 5.0 Monitoring and Adaptive Management

5.1 MONITORING APPROACH AND PERFORMANCE STANDARDS

The planted areas of each creek reach will be monitored for 5 years following planting to determine plant survival rate, natural wetland recruitment, water levels, area of vegetative coverage, percent of non-native or upland plant cover, conditions that favor plant growth, and constraints adversely affecting plant success. Monitoring results will be used to adaptively manage the wetlands plantings for subsequent years. Species mix and numbers, spacing, lateral distance and elevation with respect to low-flow water surface will be adjusted to promote plant growth and long-term viability.

A monitoring approach will be developed during baseline monitoring and will reflect the individual site conditions, the performance standards in this MMP, and the methods presented below. A protocol describing this approach will be written by the Revegetation Monitor and referenced each year to ensure repeatable and accurate implementation of data collection methods. This monitoring protocol document will provide a step by step approach for collecting monitoring data, location of all monitoring points (transects, photo-points, etc.), and a list of materials needed / used.

In order to determine whether mitigation goals are being achieved, it is necessary to set performance standards. The monitoring of riparian and wetland planting areas and the success of these areas will be evaluated against general baseline conditions identified in the FEIR, wetland delineation and other environmental documentation prepared in coordination with the project. Performance standards for the Project are presented in **Table 8**:

TABLE 8
HABITAT MITIGATION PERFORMANCE STANDARDS

Standard	Year 1	Year 2	Year 3	Year 4	Year 5
Wetlands					
Cover planted/recruited non-invasive species (%)	n/a	≥40	≥50	≥60	≥70
Cover invasive species (%)	n/a	n/a	≤10	≤10	≤10
Natural recruitment	n/a	Actively occurring	Actively occurring	Actively occurring	Actively occurring
Riparian					
Survival (%)	70	70	n/a	n/a	n/a
Cover (%)	n/a	n/a	50	62.5	75
Overall health and vigor	>3	>3	>3	>3	>3
Cover invasive species[21] (%)	n/a	n/a	≤10	≤10	≤10
Grassland (hydroseeded)					
Areal cover (%)	40	50	60	70	70

[21] Invasive species include the plant species listed in the SCVWD's 2014-2023 Stream Maintenance Program (Table 1), included with this plan as Exhibit D.

5.2 METHODS

5.2.1. Percent Cover

Percent Areal Cover

In all habitat revegetation areas (wetlands, riparian areas, and ruderal/grasslands), the percentage of areal coverage will be determined through analysis of full color aerial photographs or satellite imagery. In riparian areas, the percentage of areal coverage will include herbaceous and woody vegetation together. Each year, the SCVWD will obtain ortho-rectified aerial photographs or satellite imagery of the project area. The SCVWD will obtain photographs/imagery collected during fair weather (to prevent cloud cover from obscuring ground features) during the summer growing season and will be ortho-rectified to ensure accuracy. The aerial photographs will be analyzed to determine the areas where differing dominant and sub-dominant species are present. Dominants are defined as those plant species contributing 50% or more of the total cover area. Subdominants are defined as those contributing between 15 and 49% of the total cover area. Where no single plant species covers over 50% of the area, the subdominants will be identified and the area classified as mixed assemblage. For each project reach, we will digitize the maps of vegetated areas and use geographic information system software to calculate the total area covered by each vegetation category, and by bare earth- this will give an estimate of % areal cover of vegetation. Field inspections will be conducted to field truth the dominant and subdominant species and verify the accuracy of the areal coverage estimates.

Invasive Species Cover

For the purpose of this plan, invasive species include the plant species listed in the SCVWD's 2014-2023 Stream Maintenance Program Table 1, included with this plan as **Exhibit D**. Cover of invasive species in the wetland and riparian mitigation areas will be determined using the same percent areal cover mapping methods described above, according to unique photo signatures of invasive species. The coverage areas will be compared to the performance standards in Table 8. Starting with the second year of monitoring, we will compare the results of the current year to the results from prior years to determine if the revegetation is progressing.

Wetland Delineation

In the wetlands revegetation areas, we will delineate jurisdictional wetlands using the methodology contained in U.S. Army Corps of Engineers *Regional Supplement to the Corps of Engineers Wetland Delineation Manual: Arid West Region* during years 3 and 5 of the monitoring period to quantify the amount of jurisdictional wetlands created, with one exception: the hydric soils parameter. It is not reasonable to expect the development of hydric soils in the newly excavated channels and created wetlands, within the standard time frame of the monitoring and performance period (of 5 years); therefore, the wetlands revegetation areas will be evaluated based on the remaining 2 parameters: wetland hydrology and wetland (hydrophytic) plants, with an emphasis on wetland plants.

At the end of the five year monitoring period a Wetland Tracker data form will be filled out and submitted to the RWQCB to document the extent of the wetlands and the performance of the riparian and wetland planting areas.

5.2.2 Survivorship

Counting a statistically representative sample of installed riparian plants within the riparian planting areas provides a simple method for measuring survivorship. The count can be repeated during

monitoring in the first two years following installation to determine how many of the initially planted species have survived. A measure of survivorship is most important in the first two years following installation to determine if plants are establishing well and whether remedial actions are needed.

5.2.3 Health and Vigor

The overall health and vigor of riparian vegetation will be evaluated each year in the field using the definitions in **Table 9**, below.

TABLE 9
HEALTH AND VIGOR RATINGS

Rating	Health and Vigor	Description
5	Excellent	Plant is vigorously growing and healthy, with no sign of disease or injury
4	Good	Plant is healthy and moderately vigorous; may have limited signs of disease or injury
3	Adequate	Plant is surviving but lacks signs of vigorous growth; may have signs of disease or injury
2	Poor	Plant exhibits low vitality, or main stem dead, but basal sprouts emerging; survival is uncertain
1	Dead	Plant shows no signs of growth and is not expected to recover

Overall health and vigor ratings will be assessed for each individual riparian planting area. The health and vigor standard will identify planting areas that are in poor health and help identify management solutions, which may include changes in plant care or change in species mix during replacement plantings, if necessary. A comparison of health and vigor between planting areas will document the variability between areas and inform the adaptive management process, allowing the SCVWD to adjust the management practices or potentially implement remedial actions as needed. Annual reports will include an overall health and vigor rating for each planting area.

The SCVWD will also qualitatively assess the health of the ruderal/grassland habitat during annual monitoring and present the results in the annual reports.

5.2.4 Overall Site Assessment

Conditions will be assessed including: habitat characteristics (e.g. increase/decrease/new occurrence of invasive species infestations, general health and productivity of vegetation communities), observation of wildlife species, human disturbances, trash, and natural disturbances (tree fall, wind damage, drought), all of which may have an impact on the success of management actions. Observations will be recorded in a field notebook or standardized data form in the same manner during each site visit.

Site observations, in addition to photo-documentation will be used to assess any erosion or bank instability during the monitoring period. The Revegetation Monitor will record observations of bank failure, irregular sediment transport or deposition, and any changes within the channel.

5.2.5 Photo-Documentation

Photo-documentation will be used to provide a qualitative assessment of overall site conditions, including vegetative dominance and structure, as well as changes in vegetative composition and cover over time. Photo-documentation is useful in documenting management projects of all sizes.

Permanent photo-points will be established at project completion and identical color photographic scenes will be taken as a part of regular monitoring.

5.2.6 Analysis of Results

Data will be collected in the field according to the methods described above. This includes both quantitative and qualitative data that will be entered into a database, written up, or otherwise saved in a place that can be easily retrieved for summarizing results and for comparison during the next monitoring event. To evaluate whether project goals and objectives are being met, SCVWD will compare the monitoring data and results to the performance standards and make conclusions about the extent to which goals are being achieved.

5.3 ANNUAL MONITORING REPORTS

Annual monitoring reports will be submitted each year to the permitting agencies on December 31st or as specified in project permits. The first year report will summarize the baseline information as well as the first year monitoring results. Baseline information must include 'as-built' plans, drawings, or maps, that accurately depict what was planted and where. Thereafter, annual reports will consist of a summary of information contained in previous reports, as well as a presentation of the current year's results and discussion of any comparisons between years or trends noted.

Annual reports will include, at the minimum, the following information:

- A summary of previous years monitoring results for discussion and comparison, and a discussion of trends noted (for annual reports in years 2-5);
- Summary description of the monitoring methods, including data collection and analysis;
- An overview of the revegetation planting effort, including a general discussion of site conditions, changes since previous report, and quantitative comparisons (average growth by plant form (i.e. trees, shrubs, ground cover) and percentiles of cover and survival);
- Analysis of success in relation to performance standards;
- Color photographs of the revegetation areas taken from the same reference points on the ground and standardized with respect to direction, lens type, etc.;
- A map of the area with relevant features, and;
- A discussion of any corrective actions needed or undertaken (including exotic plant control efforts or replanting).

During the first and second year after riparian and wetland planting, all mitigation areas will be inspected for significant erosion or instability prior to the storm season and then during annual monitoring in the spring. Any identified unstable areas will require appropriate erosion control measures (e.g., netting, vegetation, silt fencing, straw, etc.). Appropriate erosion control measures will be applied to any identified unstable areas. During the third year, an erosion inspection will be carried out prior to the start of the storm season with erosion control measures applied to unstable areas.

In addition to annual reports, a Wetland Tracker form will be submitted to the RWQCB to document the progress and performance of the wetland planting areas.

Section 6.0 Plan Preparation Team

6.1 PROJECT SPONSOR

Santa Clara Valley Water District
5750 Almaden Expressway
San Jose CA 95118

Contact: James Manitakos
Environmental Planner II
5750 Almaden Expressway
San Jose, CA 95118-3614
408-630-2833
408-630-3196 (Direct)
jmanitakos@valleywater.org

6.2 MITIGATION AND MONITORING PLAN PREPARATION

Santa Clara Valley Water District

Jennifer Castillo
Environmental Services Manager
408-630-3196 (direct)
jcastillo@valletywater.org

Ted Ibarra, P.E.
Associate Civil Engineer
408-630-2067 (direct)
tibarra@valleywater.org

James Manitakos
Environmental Planner II
408-630-2833 (direct)
jmanitakos@valleywater.org

Linda Spahr
Revegetation Biologist
408-630-2752 (direct)
lspahr@valleywater.org

Bobby Tan
Assistant Engineer II
408-630-2712 (direct)
btan@valleywater.org

Environmental Science Associates, Inc.

Rachel Brownsey
Restoration Ecologist
916-564-4500 (general)
rbrownsey@esassoc.com

Priya Finnemore
Regulatory Program Manager
415-962-8458 (direct)
pfinnemore@esassoc.com

Martha Lowe
Senior Watershed Ecologist
510-839-5066 (general)
mlowe@esassoc.com

Section 7.0 References

California Department of Fish and Game (CDFG). 2010. *List of California Terrestrial Natural Communities recognized by the California Natural Diversity Database (*CNDDB).

ESA. 2004. *Delineation of Waters of the United States at the Lower Reaches of Berryessa Creek and Wrigley Ford Creek, Santa Clara County, California*. Prepared by ESA for the SCVWD (February 2004).

ESA, 2005. *Delineation of Waters of the United States at Calera and Tularcitos Creeks, Santa Clara County, California*. Prepared by ESA for the SCVWD. (August, 2005).

ESA. 2010a. *Lower Berryessa Creek Delineation of Waters of the United States, Santa Clara County, California*. Prepared by ESA for the SCVWD, in support of the Lower Berryessa Levees Project (August, 2010).

ESA. 2010b. *Lower Berryessa Creek Delineation of Waters of the United States – Revisions for Verification (letter and revised mapbook)*. Prepared by ESA for the SCVWD, in support of the Lower Berryessa Levees Project. (October, 2010).

ESA. 2010c. *Delineation of Waters of the United States at Calera and Tularcitos Creeks, Santa Clara County, California – Request for Extension/Re-Verification (letter and enclosures)*. Prepared by ESA for the SCVWD. (March, 2010).

ESA. 2011. *Lower Berryessa Creek Program – Final Environmental Impact Report (SCH#2007092084)*. Prepared by ESA for the SCVWD. (December, 2011).

Mayer and Laudenslayer. 1988. *A Guide to Wildlife Habitats of California*.

Santa Clara Valley Water District. 2002. *Instream Wetland Vegetation Regrowth Study, Fourth Annual Report: Results for 2001*.

Santa Clara Valley Water District, 2010. *Santa Clara Valley Water District Calabazas Creek Flood Protection Project Draft Conceptual Mitigation Monitoring Plan (Doc No. 205516)*. Prepared by Environmental Science Associates (ESA).

Santa Clara Valley Water District, 2011. *Lower Berryessa Creek Program Final Program Environmental Impact Report*. State Clearinghouse No. 2007092084.

Sawyer and Keeler-Wolf. 1995. *A Manual of California Vegetation.*

U.S. Army Corps of Engineers (Corps), 2004. Letter of Verification for *Delineation of Waters of the United States at the Lower Reaches of Berryessa Creek and Wrigley Ford Creek, Santa Clara County, California*. (May 19, 2004).

U.S. Army Corps of Engineers (Corps), 2005. Letter of Verification for *Delineation of Waters of the United States at Calera and Tularcitos Creeks, Santa Clara County, California*. (Nov. 29, 2005).

U.S. Army Corps of Engineers (Corps), April 10, 2010. Engineering Technical Letter (ETL) No. 1110-2-571,*Guidelines for Landscape Planting and Vegetation Management at Levees, Floodwalls, Embankment Dams, and Appurtenant Structures.*

EXHIBIT A

Existing Species Composition and Cover: Survey Notes

California Circle to N. Abel St., Station 0+00 to 24+00

West Side Structural/Species Composition and Cover Estimates:

- Riparian/inboard levee predominantly non-native, herbaceous with very few trees.
  - Composite [tree + shrub] aerial cover visually estimated at 5%. DBH range = 5-18 inches.
  - No shrubs present.
- Outboard levee is predominantly non-native, herbaceous with very few landscape trees/shrubs on fence line escaping from backyard landscaping.
  - Composite [tree + shrub] aerial cover visual estimate = 5%. DBH range 2-15".

East Side Structural/Species Composition and Cover Estimates:

- Riparian/inboard levee is all non-native, herbaceous.
- Outboard levee [mostly at grade with levee road] predominantly non-native, herbaceous.
  - One exception found only around PG&E tower along last d/s two hundred feet of this reach. Old mixed landscape [planted natives + exotics].
  - Composite [tree + shrub] Aerial Cover = 75%, primarily exotic tree species, 15-25 ft tall, 3-6 inch DBH.
  - tree dominants = non-native lollypop tree with leaf deforming pysllid insect infestation, native red willow (multi-trunk)
  - exotic tree sub-dominants = invasive Mexican fan palm, ornamental pear, invasive olive, pistache, invasive black acacia, 1 cypress
  - exotic shrubs/vine = firethorn, hopseed, red trumpet vine
  - native shrub = coyote brush

N. Abel Street to N. Milpitas Blvd., Station 24+00 to 55+50

West Side Structural/Species Composition and Cover Estimates:

- Riparian/inboard levee predominantly non-native, herbaceous with 22 infrequent landscape trees.
  - Tree aerial cover estimate = 20%.
  - Tree dominants = 30 ft tall pines with 12-14" dbh & invasive holly oak with 4-6" dbh & 12-15 ft height.
  - No shrubs present.
- Outboard levee from N. Able Street to upstream end of triangle park.
  - Composite [tree + shrub] aerial cover = 30-40% [20% trees + 20% shrubs]. Tree DBH range 2-12". Tree height range = 6-12 ft. Shrub height = 6 ft.
  - Tree dominants = non-native ash possibly naturalized from park planting.
  - Other trees present = 2 Mexican fan palms, 1 black acacia, 1 Eucalyptus @ 10" DBH, purple leaf plums, Pyracantha
  - Shrub dominant = Hakea
  - Other shrubs present = oleander

- Outboard levee from upstream end of triangle park to North Milpitas Blvd.
  - Composite [tree + shrub] aerial cover visual estimate = 100% [80% shrubs + 20% trees]. Shrubs 6-12 ft tall. Occasional trees 10-30 ft tall with DBH range 4-18 inches.
  - Tree dominant = African sumac
  - Other trees present = pines, 1 London plane, invasive holly oak, purple leaf plums, Eucalpytus
  - Shrub dominant = Acacia redolens
  - Shrub sub- dominants = Hakea [50% live, 50% dead], lemonade berry
  - Other shrubs/vines present = Jasminum polyanthemum, oleander, firethorn

East Side Structural/Species Composition and Cover Estimates:

- Riparian/ inboard levee from N. Abel Street to N. Milpitas Blvd. predominantly non-native herbaceous with scattered trees.
  - Dominant trees = planted pines 8-10" DBH [live and dead] & 15-20 ft tall and invasive holly oak @ 3-6 inch DBH & 8-12 ft tall.
  - No shrubs present
- Outboard levee from north Abel Street to downstream end of lake (station 34+00) Mix of non-native landscape trees and shrubs.
  - Composite [Tree + Shrub] Aerial Cover visual estimate = 100% [40% trees + 60% shrubs].
  - Dominant trees = exotic Peruvian pepper, exotic pines; 30 ft tall; DBH range 6-14 inches
  - Dominant shrub = exotic Acacia longifolia 10-15 ft tall
  - Shrub sub-dominants = southern California native lemonade berry, invasive Italian buckthorn
- Outboard Levee along lake. Predominantly non-native herbaceous with 3 dead Mexican fan palms @ 14" dbh under power lines.
  - 1 holly oak, shrub form
- Outboard Levee u/s end of lake to N. Milpitas Blvd: mix of older landscape trees and shrubs
  - Composite [Tree + Shrub] Aerial Cover = 100% [75% trees + 25% shrubs]
  - Dominant trees = pines and Peruvian pepper to 30 ft tall; multi-stems; DBH range 8-14 inches
  - Shrub dominant = southern California native lemonade berry; 5-10 ft tall
  - Shrub sub-dominant = Acacia redolens

N. Milpitas Blvd. To N. Hillview Drive, Station 55+50 to 79+50

West Side Structural/Species Composition and Cover Estimates:

- Riparian/inboard levee from N. Milpitas Blvd to N. Hillview Drive: predominantly exotic herbaceous with scattered individual exotic trees.
  - Tree aerial cover visual estimate = 15-20%.
  - Tree dominants = holly oak to 30 ft tall and 10-12" dbh; multi-trunk pines to 40 ft tall and 12-18 inch dbh, 1 valley oak 10" dbh.
  - No true shrubs present. One holly oak stump sprout @ 10 ft tall.
- Outboard levee [shallow grade] Mix of predominantly non-native landscape shrubs 6-14 feet tall with a few scattered small trees to 15 feet tall.
  - Composite [tree + shrub] aerial cover estimate = 100% [tree 10% + 90% shrub]
  - Trees present = African sumac, pines
  - Dominant shrub = Acacia redolens
  - Sub-dominant shrubs = bottlebrush, cotoneaster, non-local ceanothus [some dead or chlorotic], coyote brush, glossy privet

- Outboard levee [at grade with Mervyn's parking lot landscape]
  - Composite [tree + shrub] aerial cover visual estimate = 40%.
  - Dominant trees = pine and holly oak. Pines to 40 ft tall and 20" dbh.
  - Psyllid-infested lollypop trees from Mervyn's landscape hanging over a few feet inside project ROW could be trimmed back.

East Side Structural/Species Composition and Cover Estimates:
Both inboard and outboard levees, primarily dry, mowed non-native herbaceous with scattered isolated landscape trees & shrubs. Outboard landscaping concentrated near trail entries at Santa Rita Drive and N. Hillview.

- Composite [tree + shrub] aerial cover visual estimate = 20-25%
- Tree Aerial Cover visual estimate = 20%; DBH range 6-18"
- Tree dominants = planted pine 25-40 ft tall
- Tree sub-dominants = holly oak 4-6" dbh and 8-15 ft tall; plus a few psyllid-infected lollypop trees
- Shrub Cover Estimate = 5% only on outboard; average 10 ft. tall; dominants = elderberry & coyote brush

N. Hillview Drive to Calaveras Blvd., Station 79+50 to 86 + 00

West Side Structural/Species Composition and Cover Estimates:

- Riparian/inboard levee is old landscaping.
  - Composite [tree + shrub] aerial cover visual estimate = 60% [10% shrub + 50% tree]
  - Tree dominants = holly oak to 20-25 ft tall with 5-10" dbh
  - Shrub dominants = planted toyons and invasive glossy privet 10-20 ft tall
  - Other shrubs present = coyote brush, elderberry, dying Italian buckthorn

East Side Structural/Species Composition and Cover Estimates:

- Riparian/inboard levee is old landscaping.
  - Composite [tree + shrub] aerial cover visual estimate = 80% [30% shrub + 50% tree]. Tree dbh range = 4-20 inches. Tree height range = 15-40 ft
  - Tree dominant = planted pine
  - Other trees present = holly oak, Mexican fan palm, non-native ash, London plane, eastern redbud, olive
  - Shrub dominants = lollypop trees in shrub form
  - Other shrubs present = coyote brush, Italian buckthorn, toyon
- Outboard levee does not exist.

Nomenclature[22] for Trees

African sumac = *Rhus lancea*
ash = *Fraxinus uhdei*
black acacia = *Acacia melanoxylon*
cypress = *Cupressus sp.*
eucalyptus = *Eucalyptus sp.*

[22] From The Jepson Manual: Higher Plants of California. University of California Press. 1993.

Nomenclature for Trees *(Continued)*
holly oak = *Quercus ilex*
lollypop tree = *Myoporum laetum*
London plane = *platanus X acerifolia*
Mexican fan palm = *Washingtonia robusta*
olive = *Olea europaea*
ornamental pear = *Pyrus calleryana or Pyrus kawakamii*
Peruvian pepper = *Schinus molle*
pine = *Pinus spp.*
pistache = *Pistacia chinensis*
purple leaf plum = *Prunus cerasifera*
red willow = *Salix laevigata*

Nomenclature for Shrubs
acacia shrubs = *Acacia redolens;* and, *A. longifolia*
bottlebrush = *Callistemon sp.*
ceanothus = *Ceanothus sp.*
cotoneaster = *Cotoneaster lacteus*
coyote brush = *Baccharis pilularis*
elderberry = *Sambucus mexicana*
firethorn = *Pyracantha sp.*
glossy privet = *Ligustrum lucidum*
hopseed = *Dodonaea viscose*
Italian buckthorn = *Rhamnus alaternus*
jasmine = *Jasminum polyanthemum*
lemonade berry = *Rhus integrifolia*
oleander = *Nerium oleander*
red trumpet vine = *Distictis buccinatoria*
sweet hakea = *Hakea suaveolens*

EXHIBIT B

Annotated Aerial Photographs and Table Showing Impacted Upland Vegetation

This page intentionally left blank

PLAN
SCALE 1" = 50'

NOTE:
1. AERIAL PHOTOGRAPHY WAS TAKEN 2006.

USERNAME: jennford Wed 18 Jan 2012 08:01am
FILENAME: K:\Active Projects\MP-4017400\Lower Berryessa Creek Project\Sheet\Misc\To Engineer\2011-10-06\trees_100511

Merge Trees + Shrubs

NOTE:

1. AERIAL PHOTOGRAPHY WAS TAKEN 2006.

PLAN
SCALE 1" = 50'

2

USERNAME: jennford Wed 18 Jan 2012 - 09:03am
FILENAME: K:\Active Projects\MP-4017400A\Lower Berryessa Creek Project\Sheet\Misc\To Engineer\2011-10-06\trees_100611

Merge Trees + Shrubs

Merge Trees + Shrubs

Merge Trees + Shrubs

1. AERIAL PHOTOGRAPHY WAS TAKEN 2006.

PLAN
SCALE 1" = 50'

3

USERNAME: jenford Wed 18 Jan 2012 08:04am
FILENAME: K:\Active Projects\MP-40174004\Lower Berryessa Creek Project\Sheet\Misc\To Engineer\2011-10-06\trees_100611

Merge Trees + Shrubs

Merge Trees + Shrubs

B Tow

MATCH LINE

MATCH LINE

1. AERIAL PHOTOGRAPHY WAS TAKEN 2006.

PLAN
SCALE 1" = 50'

4

USERNAME: jennford Wed 18 Jan 2012 08:06am
FILENAME: K:\Active Projects\MP-40174004\Lower Berryessa Creek Project\Sheet\Misc\To Engineer\2011-10-06\trees_100611

1. AERIAL PHOTOGRAPHY WAS TAKEN 2006.

PLAN
SCALE 1" = 50'

5

USERNAME: jemford Wed 18 Jan 2012 08:08am
FILENAME: K:\Active Projects\MP-4017400\Lower Berryessa Creek Project\Sheet\Misc\To Engineer\2011-10-06\trees_100611

1. AERIAL PHOTOGRAPHY WAS TAKEN 2008.

PLAN
SCALE 1" = 50'

6

Lower Berryessa Creek Project

Total Aerial Cover - Riparian Habitat (Inboard + Outboard)

Note:
- Dotted tree(s)
- Non-dotted tree(s)

Sheet No	STA	STA	Square Footage (SF)				ACRE (AC)
			Left Bank		Right Bank		
			Inboard	Outboard	Inboard	Outboard	
1	0+00	2+00		5,600			0.1286
1	5+90				1,225		0.0281
1	7+50				400		0.0092
2	24+00					2,250	0.0517
2	26+65	31+70		12,200			0.2801
2	30+00	30+50	2,550				0.0585
2	30+60				100		0.0023
3	31+75	33+70		3,900			0.0895
3	32+00			1,000			0.0230
3	34+80			100			0.0023
3	35+00			75			0.0017
3	35+20			75			0.0017
3	37+00		700				0.0161
3	37+15			100			0.0023
3	38+30		100				0.0023
3	40+90		150				0.0034
3	42+50		1,375				0.0316
3	43+50		100				0.0023
3	45+40		100				0.0023
3	44+70	47+15		4,900			0.1125
3	32+70				600		0.0138
3	33+55				100		0.0023
3	35+35				100		0.0023
3	36+70				200		0.0046
3	37+65				100		0.0023
3	38+25				100		0.0023
3	38+60					150	0.0034
3	39+00					100	0.0023
3	40+00					2,550	0.0585
3	41+30				225		0.0052
3	42+10					400	0.0092
3	42+40				100		0.0023
3	42+85				750		0.0172
3	42+45					250	0.0057
3	42+85					600	0.0138
3	43+50					250	0.0057
3	44+00	45+65				3,600	0.0826
3	46+10	47+15				2,100	0.0482
4	47+15	55+00		19,625			0.4505
4	55+00		600				0.0138
4	56+50			1,500			0.0344
4	56+70		2,700				0.0620
4	58+30			375			0.0086

Sheet No	STA	STA	Square Footage (SF) Left Bank Inboard	Left Bank Outboard	Right Bank Inboard	Right Bank Outboard	ACRE (AC)
4	58+40		600				0.0138
4	59+70		350				0.0080
4	60+25		225				0.0052
4	61+50		1,625				0.0373
4	47+15	55+70				21,375	0.4907
4	47+50				150		0.0034
4	48+15				150		0.0034
4	49+15				150		0.0034
4	49+55				100		0.0023
4	49+75				100		0.0023
4	50+20				300		0.0069
4	50+50				225		0.0052
4	51+00				225		0.0052
4	51+60				300		0.0069
4	52+60				1,200		0.0275
4	55+50				875		0.0201
4	57+00					400	0.0092
4	57+30					225	0.0052
4	58+00					150	0.0034
4	58+80				625		0.0143
4	59+70				625		0.0143
4	58+80					225	0.0052
4	59+30					450	0.0103
4	60+70					225	0.0052
4	61+25					450	0.0103
5	63+00		300				0.0069
5	65+50		2,250				0.0517
5	67+40		375				0.0086
5	68+00		1,500				0.0344
5	69+00		3,600				0.0826
5	70+00		4,800				0.1102
5	71+20		400				0.0092
5	71+70		400				0.0092
5	72+30		400				0.0092
5	72+60		300				0.0069
5	72+00			1,500			0.0344
5	76+00		600				0.0138
5	62+50				100		0.0023
5	64+60					100	0.0023
5	65+00					100	0.0023
5	65+40					100	0.0023
5	66+00				1,200		0.0275
5	66+65				400		0.0092
5	67+00					100	0.0023
5	67+70					1,625	0.0373
5	68+50					1,200	0.0275

Sheet No	STA	STA	Square Footage (SF)				ACRE (AC)
			Left Bank		Right Bank		
			Inboard	Outboard	Inboard	Outboard	
5	70+50					2,800	0.0643
5	73+40					500	0.0115
5	74+50					1,500	0.0344
5	67+50				1,000		0.0230
5	68+30				500		0.0115
5	68+80				500		0.0115
5	71+00				3,850		0.0884
5	72+40				1,575		0.0362
5	74+00				1,750		0.0402
5	75+70				300		0.0069
6	77+00		2,850				0.0654
6	79+30			200			0.0046
6	80+40		225				0.0052
6	80+50	85+70		16,800			0.3857
6	77+00				100		0.0023
6	79+40				1,200		0.0275
6	79+80					100	0.0023
6	78+00					8,700	0.1997
6	80+50	85+50				12,900	0.2961
6	85+50				1,800		0.0413
Column Totals (Inboard side*)			0.6698		0.5349		1.2047
Column Totals (Outboard side)				1.5599		1.5031	3.0630
Total Aerial Cover							**4.2676**

Note: Inboard side riparian vegetation included in totals for CDFW habitat

EXHIBIT C

Proposed Low Bench Locations for Riparian Plantings

This page intentionally left blank

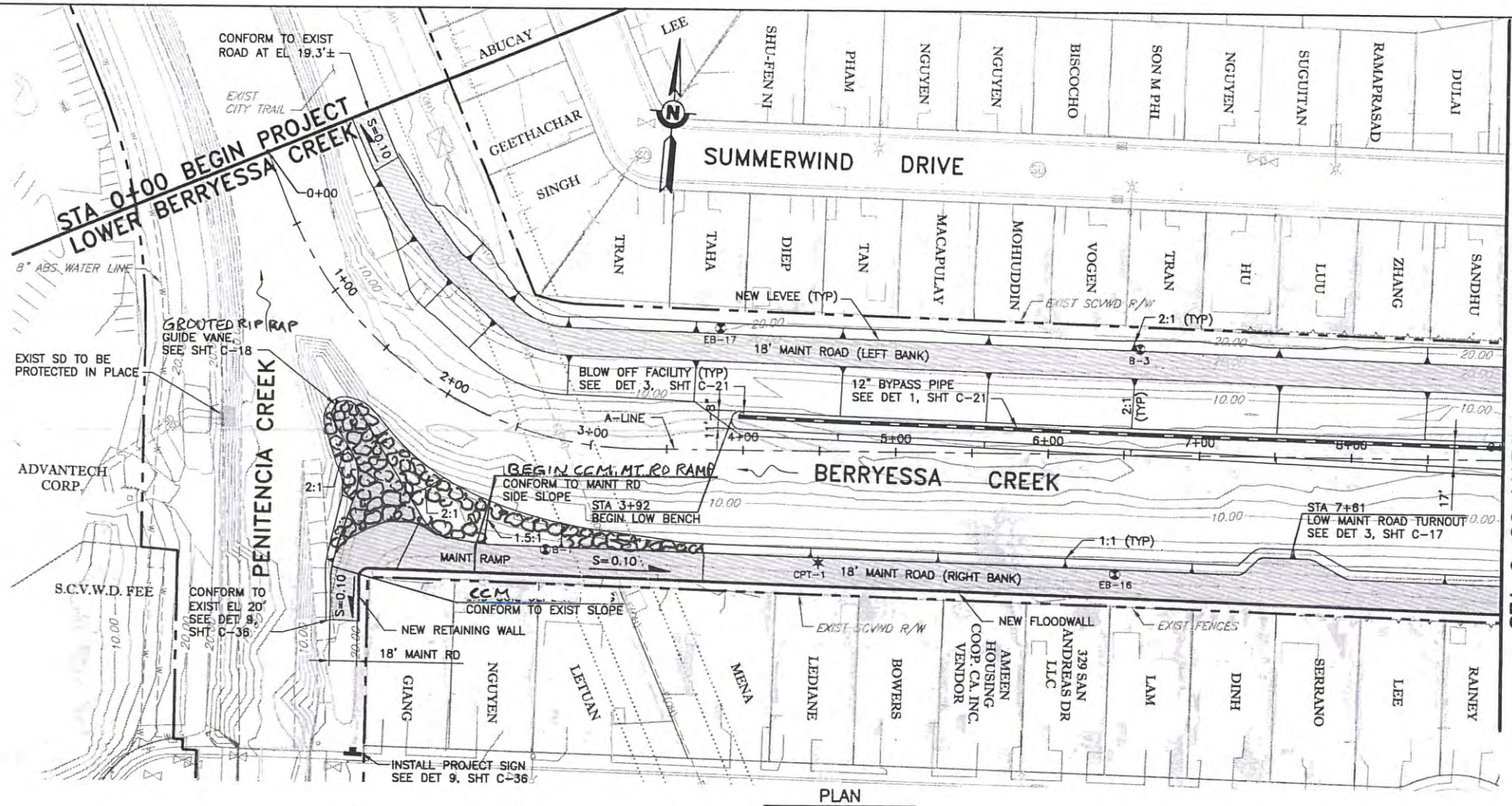

PLAN

SCALE 1" = 50'

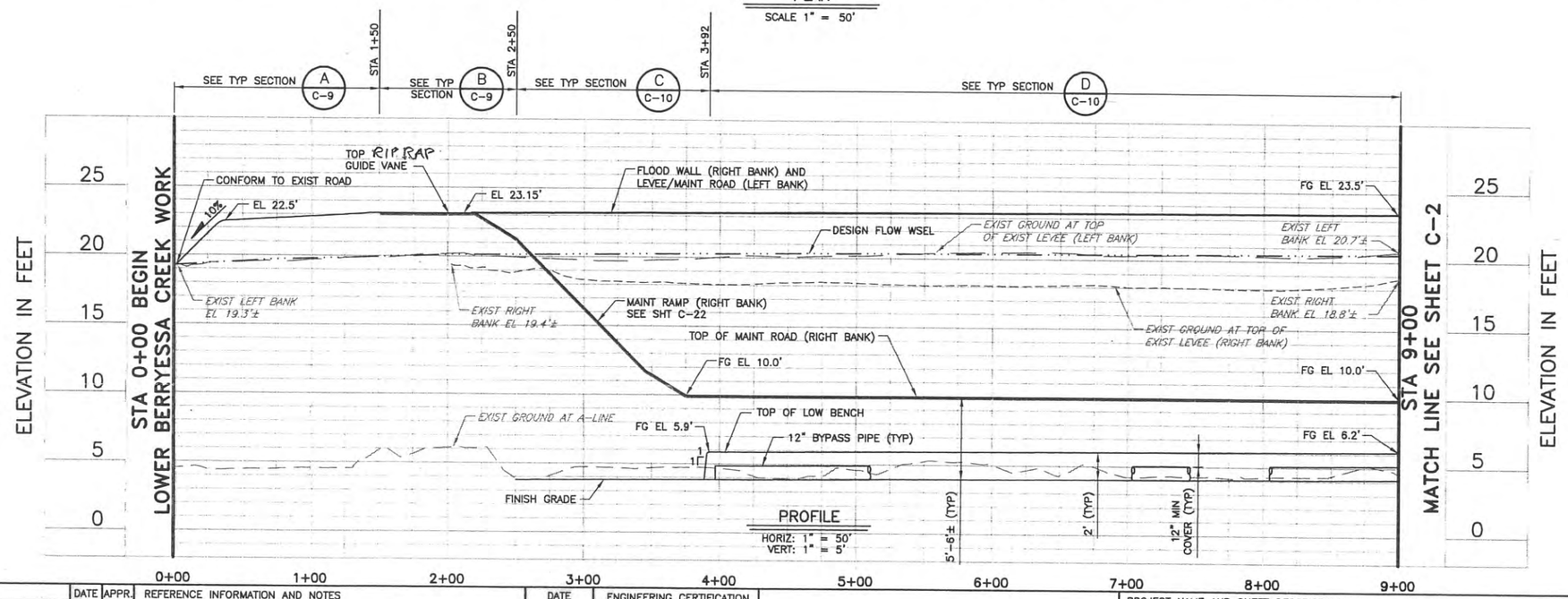

PROFILE

HORIZ: 1" = 50'
VERT: 1" = 5'

REV	DESCRIPTION	DATE	APPR.
	100% PRELIMINARY 01-09-14		

REFERENCE INFORMATION AND NOTES

1. AERIAL PHOTOGRAPHY WAS TAKEN JULY 2008.
2. LEFT AND RIGHT BANKS ARE VIEWED LOOKING UPSTREAM.

DATE	JAN 2014
DESIGN	B. TAN
DRAWN	J. FORD
CHECKED	T. IBARRA

ENGINEERING CERTIFICATION

REGISTERED PROFESSIONAL ENGINEER — ED J. IBARRA — No. 52587 — Exp. 12/31/12 — CIVIL — STATE OF CALIFORNIA

PROJECT ENGINEER DATE

Santa Clara Valley Water District

PROJECT NAME AND SHEET DESCRIPTION:

LOWER BERRYESSA CREEK PROJECT

PLAN AND PROFILE
STA 0+00 TO STA 9+00 (A-LINE)

SCALE	PROJECT NUMBER
AS SHOWN	40174004
VERIFY SCALES	SHEET CODE:
0 1" BAR IS ONE INCH ON IF NOT ONE INCH ON THIS SHEET, ADJUST SCALES	C-1
	SHEET NUMBER:

DOCUMENT NUMBER: BER_CY-C-4017-XXXXX

USERNAME: JENNFORD Wed 12 Dec 2012 01:16pm
FILENAME: K:\Active Projects\MP-40174004\Lower Berryessa Creek Project\Sheet\C-01

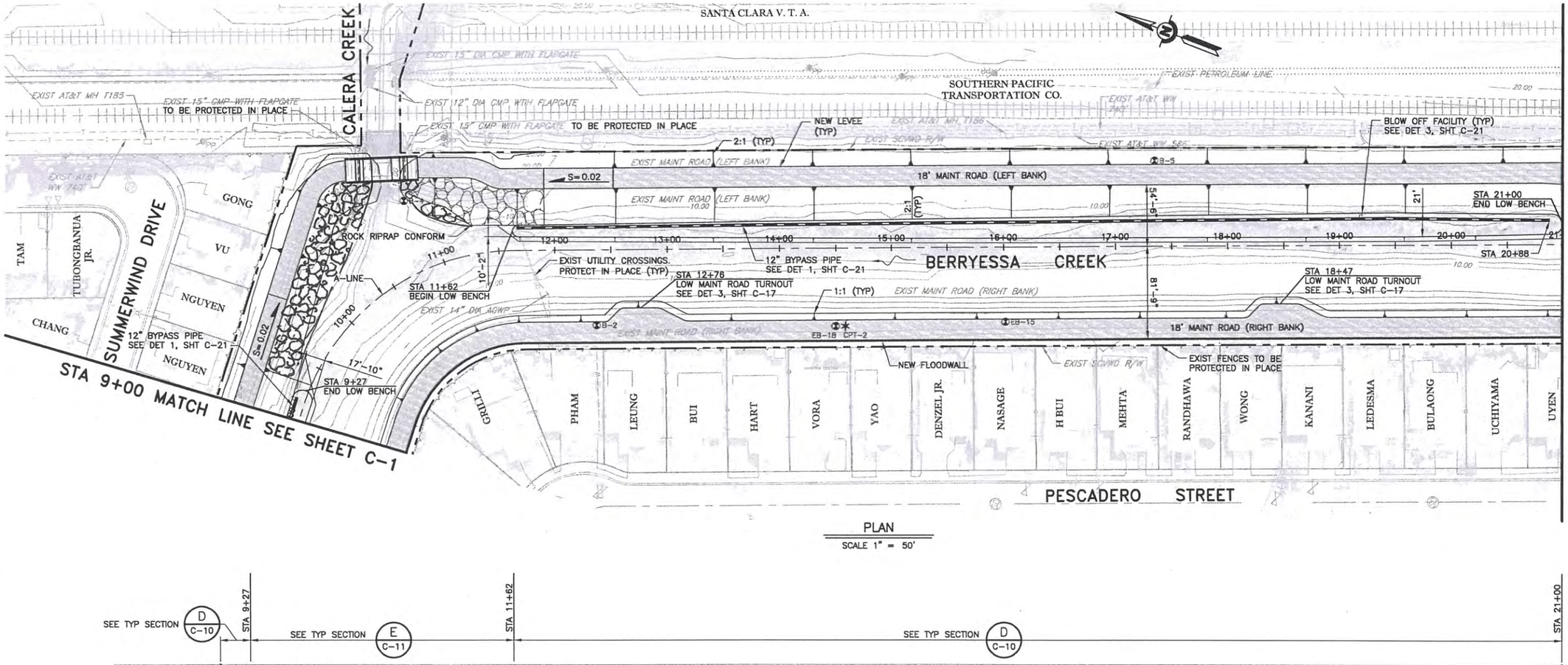

PLAN
SCALE 1" = 50'

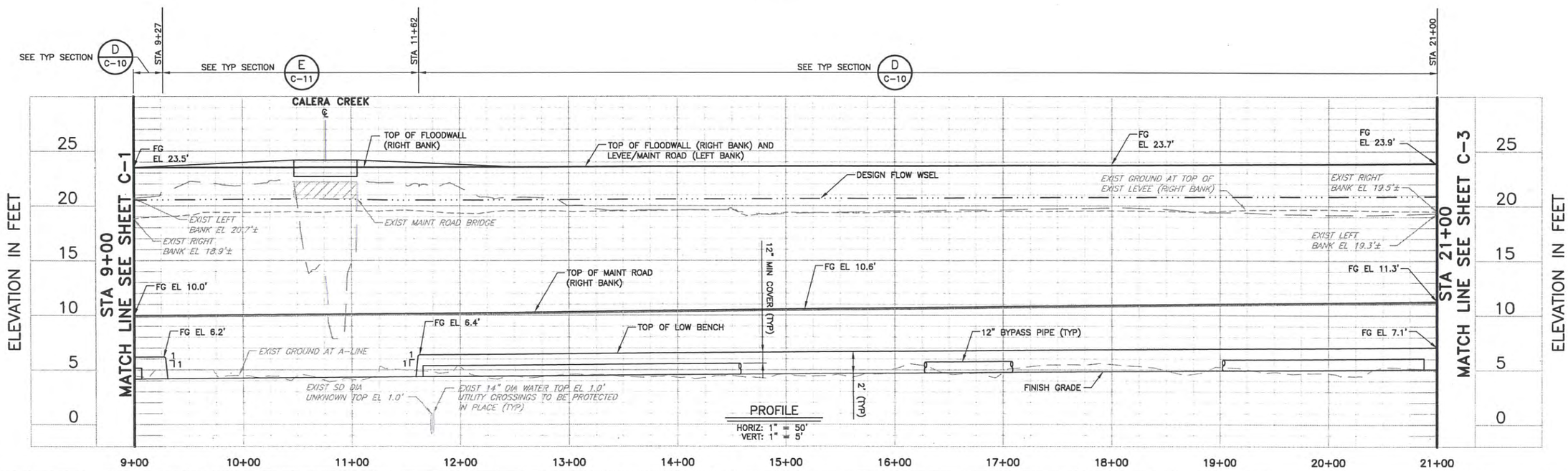

PROFILE
HORIZ: 1" = 50'
VERT: 1" = 5'

REV	DESCRIPTION	DATE	APPR.
	100% PRELIMINARY 01-09-14		

REFERENCE INFORMATION AND NOTES
1. AERIAL PHOTOGRAPHY WAS TAKEN JULY 2008.
2. LEFT AND RIGHT BANKS ARE VIEWED LOOKING UPSTREAM.

DATE JAN 2014
DESIGN B. TAN
DRAWN J. FORD
CHECKED T. IBARRA

ENGINEERING CERTIFICATION
REGISTERED PROFESSIONAL ENGINEER TED J. IBARRA No. 52387 Exp. 12/31/12 CIVIL STATE OF CALIFORNIA
PROJECT ENGINEER DATE

Santa Clara Valley Water District

PROJECT NAME AND SHEET DESCRIPTION:
LOWER BERRYESSA CREEK PROJECT
PLAN AND PROFILE
STA 9+00 TO STA 21+00 (A-LINE)

SCALE AS SHOWN
VERIFY SCALES 0 1" BAR IS ONE INCH ON ORIGINAL DRAWING. IF NOT ONE INCH ON THIS SHEET, ADJUST SCALES ACCORDINGLY
PROJECT NUMBER 40174004
SHEET CODE: C-2
SHEET NUMBER: 26 OF XX

DOCUMENT NUMBER: BER_CY-C-4017-XXXXX
USERNAME: jennford Mon 29 Jul 2013 10:33am
FILENAME: K:\Active Projects\MP-40174004\Lower Berryessa Creek Project\Sheet\C-02

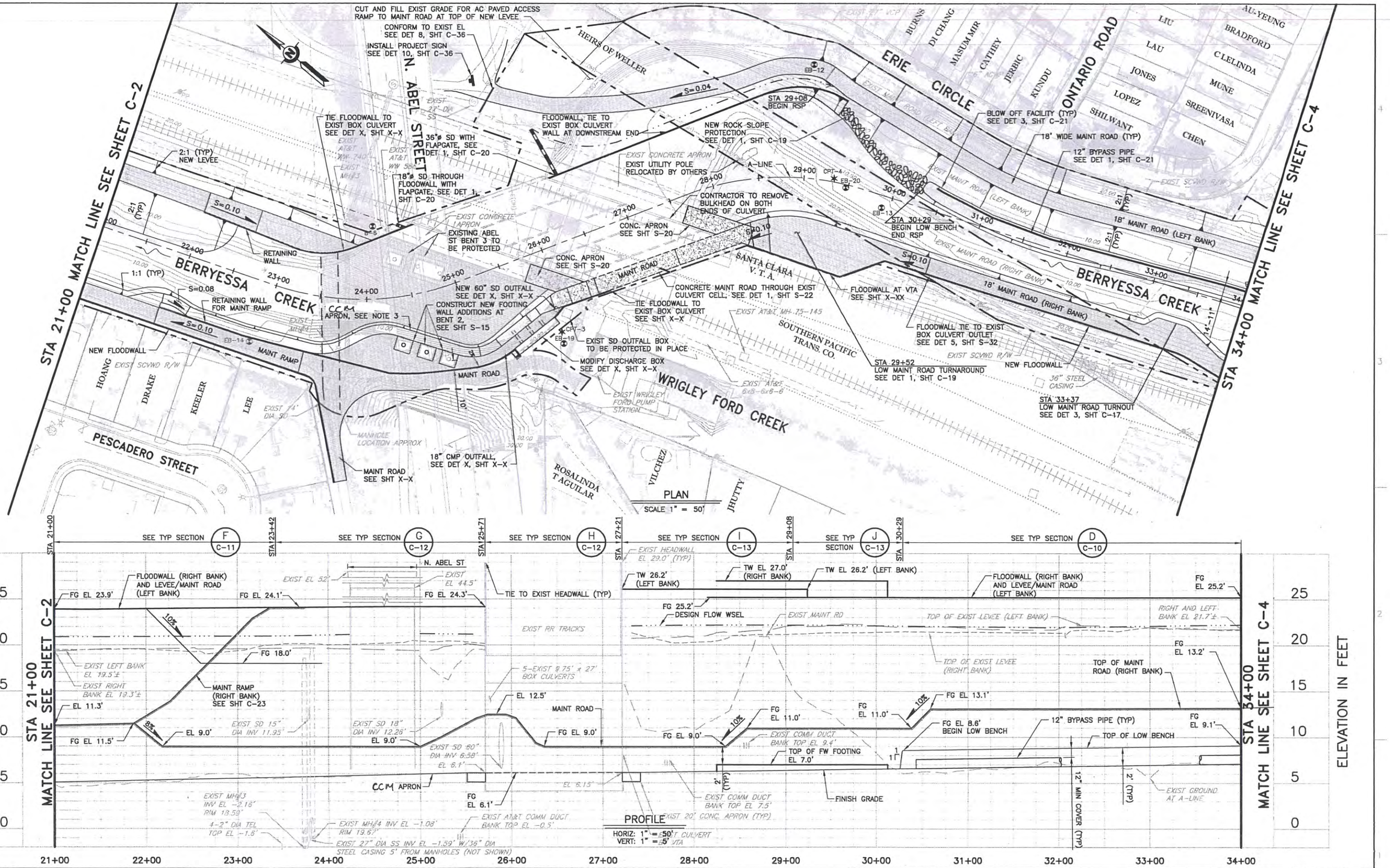

REV	DESCRIPTION	DATE	APPR.
	100% PRELIMINARY 01-09-14		

REFERENCE INFORMATION AND NOTES

1. AERIAL PHOTOGRAPHY WAS TAKEN JULY 2008.
2. LEFT AND RIGHT BANKS ARE VIEWED LOOKING UPSTREAM.
3. SEE PLAN ON SHEET S-21 FOR CCM. APRON DETAIL.
4. SEE SHEET C-23 FOR PLAN DETAIL FROM STA 21+00 TO STA 25+00.
5. SEE SHEET C-27 FOR PLAN DETAIL FROM STA 25+00 TO STA 31+00.

DATE	JAN 2014
DESIGN	B. TAN
DRAWN	J. FORD
CHECKED	T. IBARRA

ENGINEERING CERTIFICATION

REGISTERED PROFESSIONAL ENGINEER TED J. IBARRA No. 52387 Exp. 12/31/12 CIVIL STATE OF CALIFORNIA

PROJECT ENGINEER DATE

Santa Clara Valley Water District

PROJECT NAME AND SHEET DESCRIPTION:

LOWER BERRYESSA CREEK PROJECT

PLAN AND PROFILE
STA 21+00 TO STA 34+00 (A-LINE)

SCALE	PROJECT NUMBER
AS SHOWN	40174004
VERIFY SCALES 0 1"	SHEET CODE: C-3
IF NOT ONE INCH ON ORIGINAL DRAWING THIS SHEET, ADJUST SCALES ACCORDINGLY	SHEET NUMBER: 27 OF XX

DOCUMENT NUMBER: BER_CY-C-4017-XXXXX

USERNAME: jennford Wed 21 Aug 2013 04:33pm
FILENAME: K:\Active Projects\WP-40174004\Lower Berryessa Creek Project\Sheet\C-03

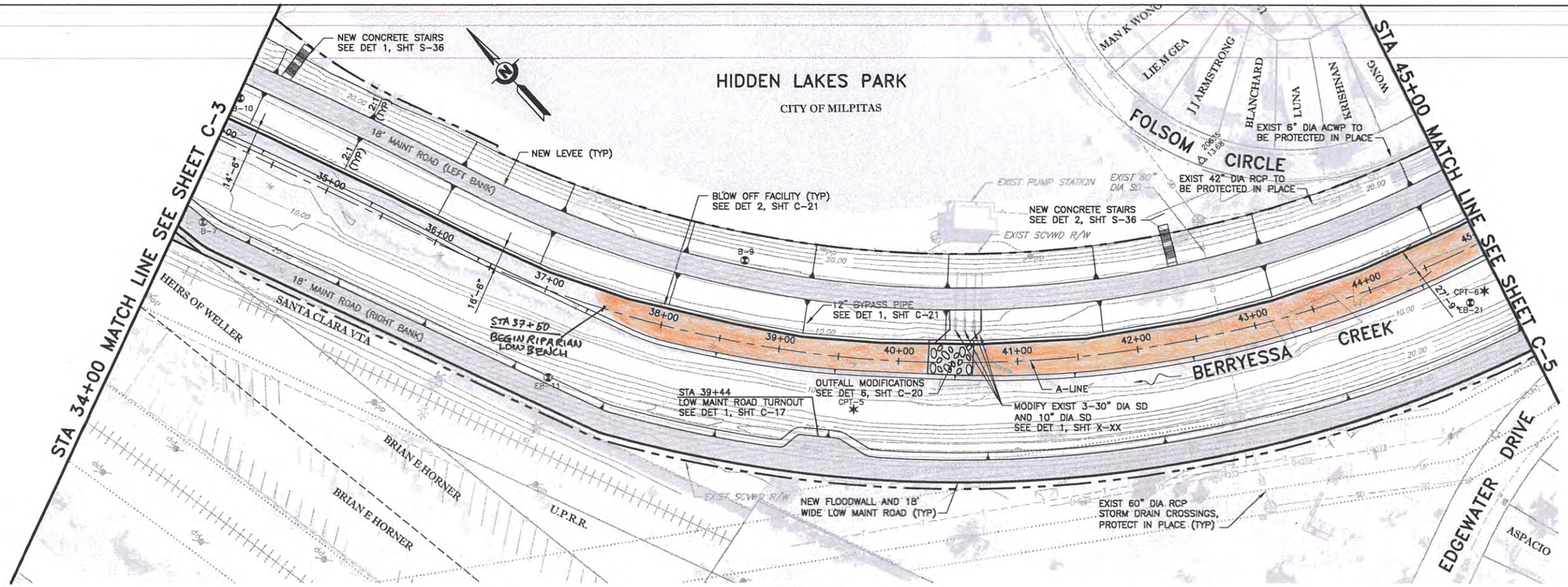

PLAN

SCALE 1" = 50'

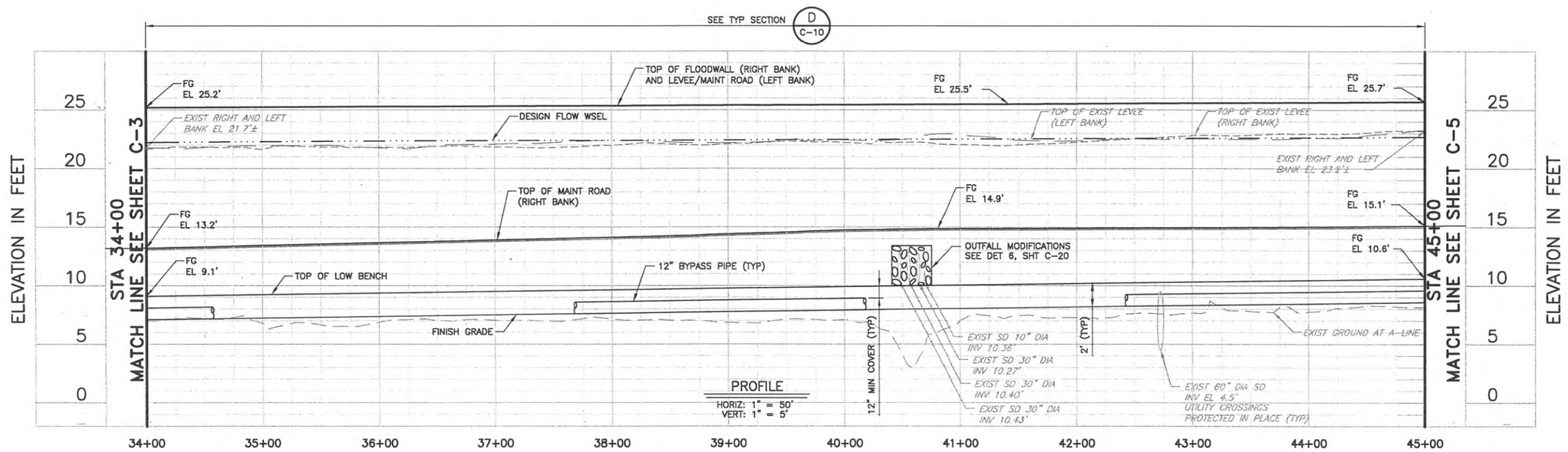

PROFILE

HORIZ: 1" = 50'
VERT: 1" = 5'

REV	DESCRIPTION	DATE	APPR.
	100% PRELIMINARY 01-09-14		

REFERENCE INFORMATION AND NOTES

1. AERIAL PHOTOGRAPHY WAS TAKEN JULY 2008.
2. LEFT AND RIGHT BANKS ARE VIEWED LOOKING UPSTREAM.

DATE	JAN 2014
DESIGN	B. TAN
DRAWN	J. FORD
CHECKED	T. IBARRA

ENGINEERING CERTIFICATION

REGISTERED PROFESSIONAL ENGINEER TED J. IBARRA No. 52387 Exp. 12/31/12 CIVIL STATE OF CALIFORNIA

PROJECT ENGINEER DATE

Santa Clara Valley Water District

PROJECT NAME AND SHEET DESCRIPTION:

LOWER BERRYESSA CREEK PROJECT

PLAN AND PROFILE
STA 34+00 TO STA 45+00 (A-LINE)

SCALE	PROJECT NUMBER
AS SHOWN	40174004
VERIFY SCALES 0 1" BAR IS ONE INCH ON ORIGINAL DRAWING IF NOT ADJUST SCALES ACCORDINGLY	SHEET CODE: C-4
	SHEET NUMBER: 28 OF XX

DOCUMENT NUMBER: BER_CY-C-4017-XXXXX

USERNAME: jennford Mon 29 Jul 2013 10:35am
FILENAME: K:\Active Projects\MP-40174004\Lower Berryessa Creek Project\Sheet\C-04

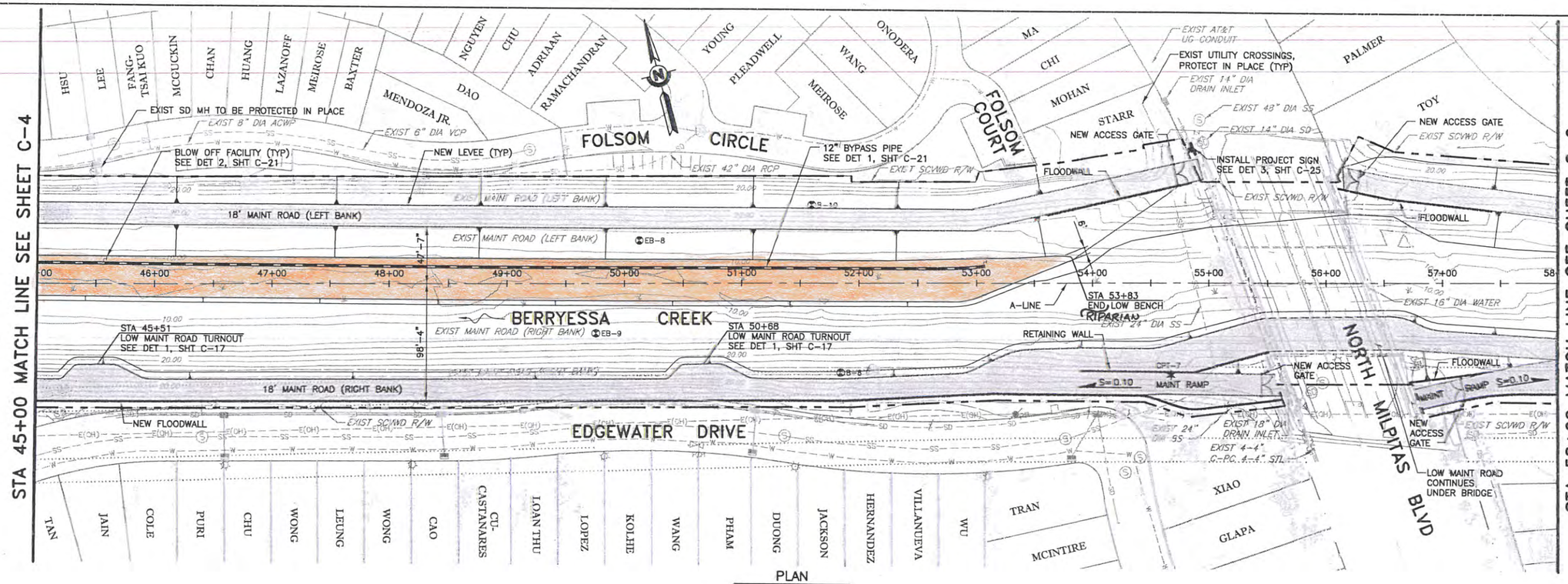

PLAN
SCALE 1" = 50'

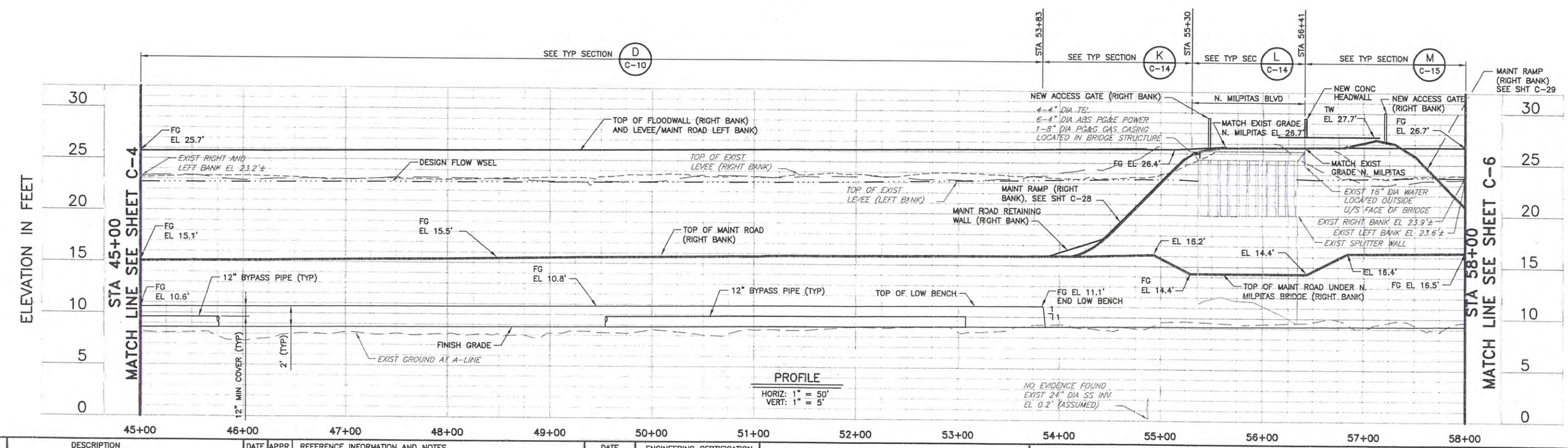

PROFILE
HORIZ: 1" = 50'
VERT: 1" = 5'

REV	DESCRIPTION	DATE	APPR.
	100% PRELIMINARY 01-09-14		

REFERENCE INFORMATION AND NOTES
1. AERIAL PHOTOGRAPHY WAS TAKEN JULY 2008.
2. LEFT AND RIGHT BANKS ARE VIEWED LOOKING UPSTREAM.

DATE JAN 2014
DESIGN B. TAN
DRAWN J. FORD
CHECKED T. IBARRA

ENGINEERING CERTIFICATION
REGISTERED PROFESSIONAL ENGINEER TED J. IBARRA No. 52387 Exp. 12/31/12 CIVIL STATE OF CALIFORNIA
PROJECT ENGINEER DATE

Santa Clara Valley Water District

PROJECT NAME AND SHEET DESCRIPTION:
LOWER BERRYESSA CREEK PROJECT
PLAN AND PROFILE
STA 45+00 TO STA 58+00 (A-LINE)

SCALE: AS SHOWN
VERIFY SCALES: 0 1"
BAR IS ONE INCH ON ORIGINAL DRAWING. IF NOT ONE INCH ON THIS SHEET, ADJUST SCALES ACCORDINGLY
PROJECT NUMBER: 40174004
SHEET CODE: C-5
SHEET NUMBER: 29 OF XX

USERNAME: JENNFORD Wed 12 Dec 2012 03:54pm
FILENAME: K:\Active Projects\MP-40174004\Lower Berryessa Creek Project\Sheet\C-05
DOCUMENT NUMBER: BER_CY-C-4017-XXXXX

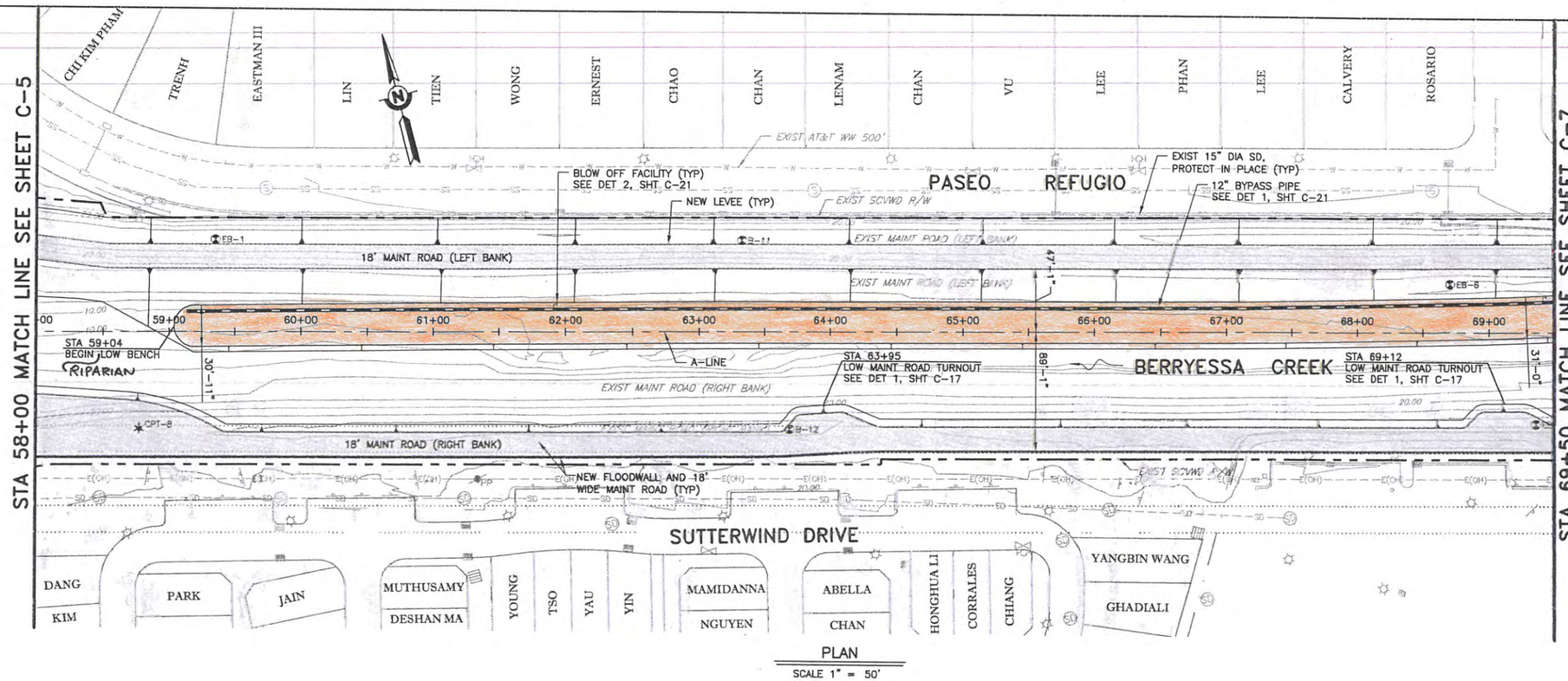

PLAN
SCALE 1" = 50'

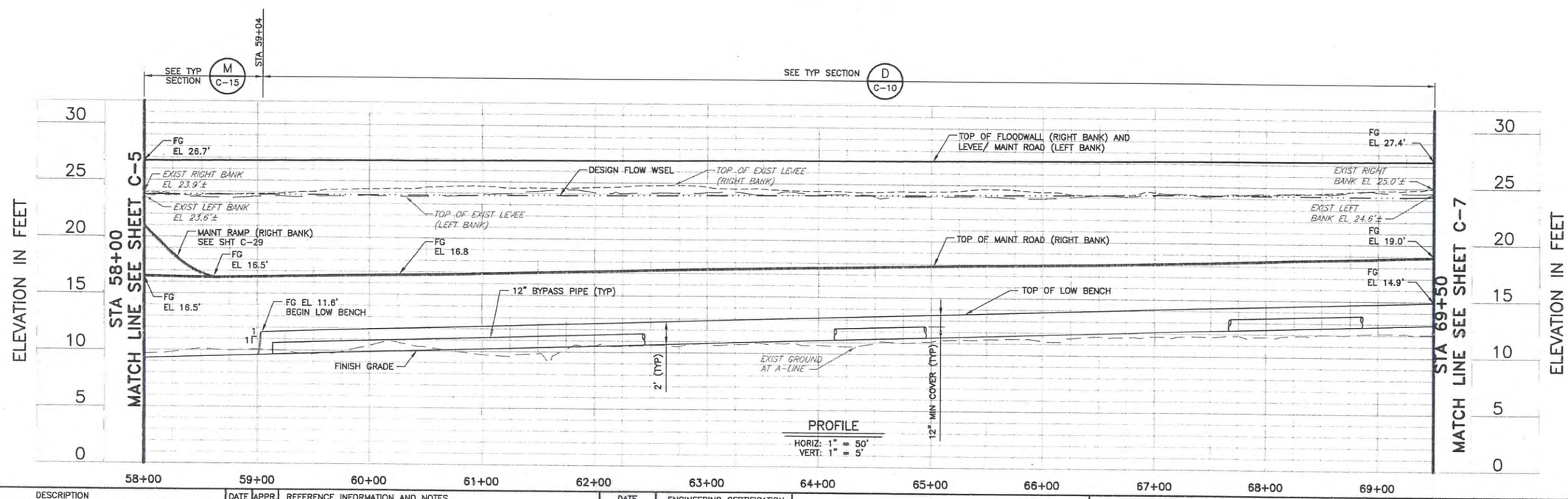

PROFILE
HORIZ: 1" = 50'
VERT: 1" = 5'

REV	DESCRIPTION	DATE	APPR.
	100% PRELIMINARY 01-09-14		

REFERENCE INFORMATION AND NOTES
1. AERIAL PHOTOGRAPHY WAS TAKEN JULY 2008.
2. LEFT AND RIGHT BANKS ARE VIEWED LOOKING UPSTREAM.

DATE	
JAN 2014	
DESIGN	B. TAN
DRAWN	J. FORD
CHECKED	T. IBARRA

ENGINEERING CERTIFICATION
REGISTERED PROFESSIONAL ENGINEER TED J. IBARRA No. 52387 Exp. 12/31/12 CIVIL STATE OF CALIFORNIA
PROJECT ENGINEER DATE

Santa Clara Valley Water District

PROJECT NAME AND SHEET DESCRIPTION:
LOWER BERRYESSA CREEK PROJECT
PLAN AND PROFILE
STA 58+00 TO STA 69+50 (A-LINE)

SCALE	PROJECT NUMBER
AS SHOWN	40174004
VERIFY SCALES 0 1" BAR IS ONE INCH ON ORIGINAL DRAWING IF NOT ONE INCH ON THIS SHEET, ADJUST SCALES ACCORDINGLY	SHEET CODE: C-6
	SHEET NUMBER: 30 OF XX

DOCUMENT NUMBER: BER_CY-C-4017-XXXXX
USERNAME: JENNFORD Wed 12 Dec 2012 04:10pm
FILENAME: K:\Active Projects\MP-40174004\Lower Berryessa Creek Project\Sheet\C-06

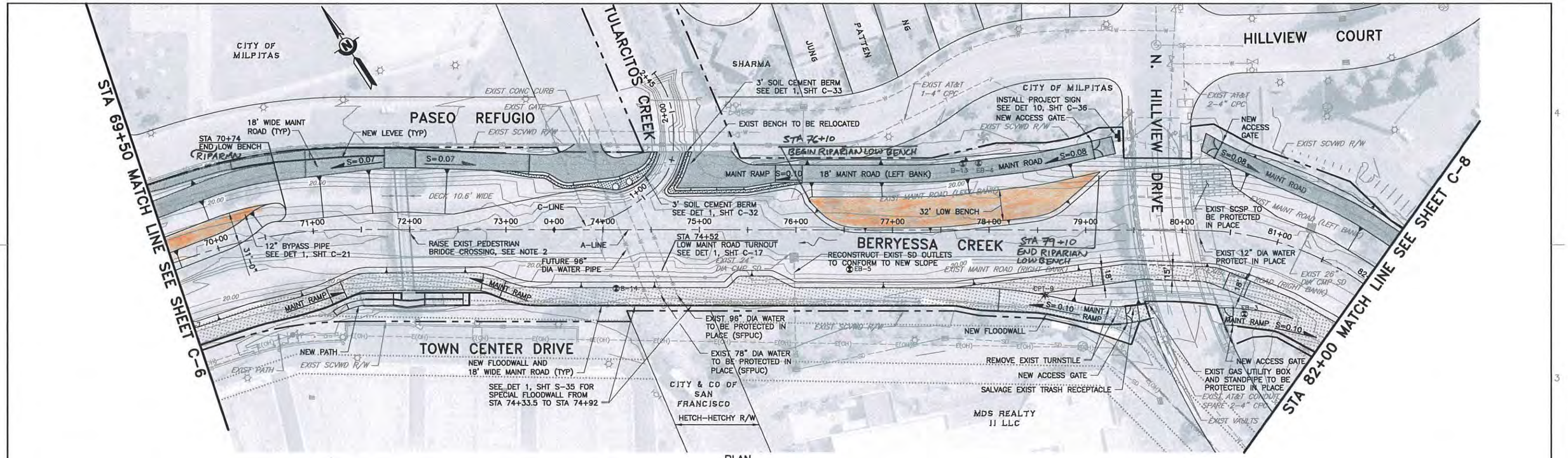

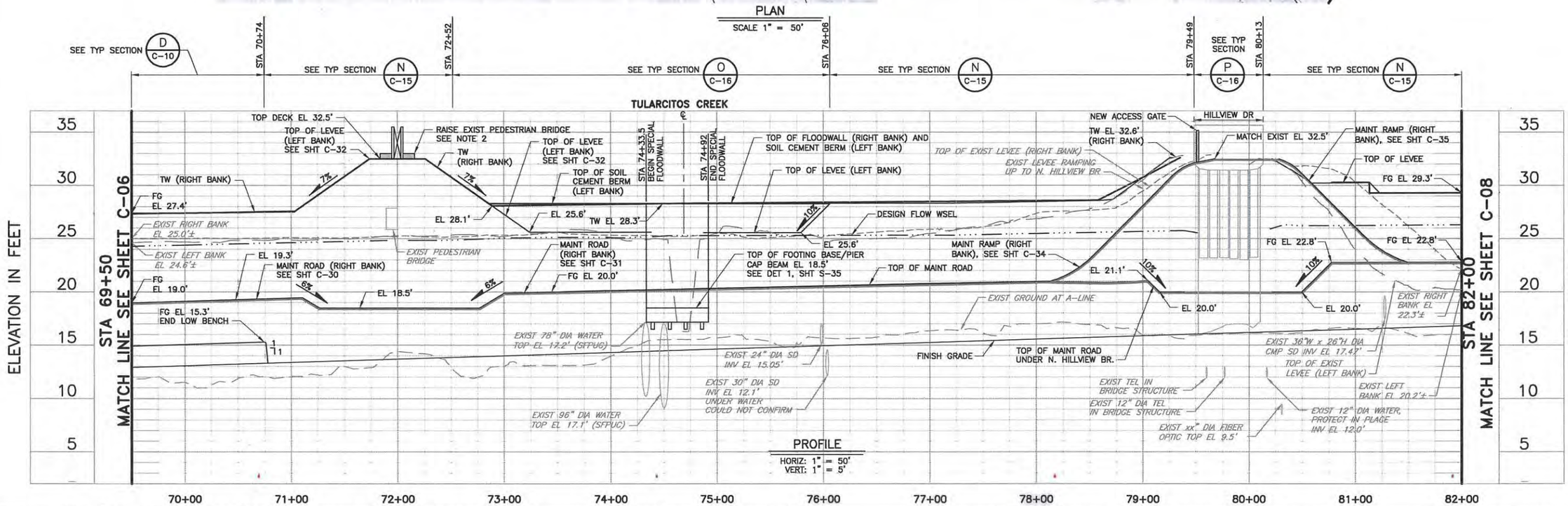

REV	DESCRIPTION	DATE	APPR.
	100% PRELIMINARY 01-09-14		

REFERENCE INFORMATION AND NOTES

1. AERIAL PHOTOGRAPHY WAS TAKEN JULY 2008.
2. LEFT AND RIGHT BANKS ARE VIEWED LOOKING UPSTREAM.

DATE	JAN 2014
DESIGN	B. TAN
DRAWN	J. FORD
CHECKED	T. IBARRA

ENGINEERING CERTIFICATION

REGISTERED PROFESSIONAL ENGINEER TED J. IBARRA No. 52387 Exp. 12/31/12 CIVIL STATE OF CALIFORNIA

PROJECT ENGINEER DATE

Santa Clara Valley Water District

PROJECT NAME AND SHEET DESCRIPTION:

LOWER BERRYESSA CREEK PROJECT

PLAN AND PROFILE
STA 69+50 TO STA 82+00 (A-LINE)

SCALE: AS SHOWN

VERIFY SCALES: 0 1" BAR IS ONE INCH ON THIS SHEET. IF NOT ONE INCH ON THIS SHEET, ADJUST SCALE ACCORDINGLY

PROJECT NUMBER: 40174004

SHEET CODE: C-7

SHEET NUMBER: 31 OF XX

USERNAME: Jennford 1/9/2014 11:57 AM
FILENAME: K:\Active Projects\MP-40174004\Lower Berryessa Creek Project\Sheet\Figure\Figure 2.dwg

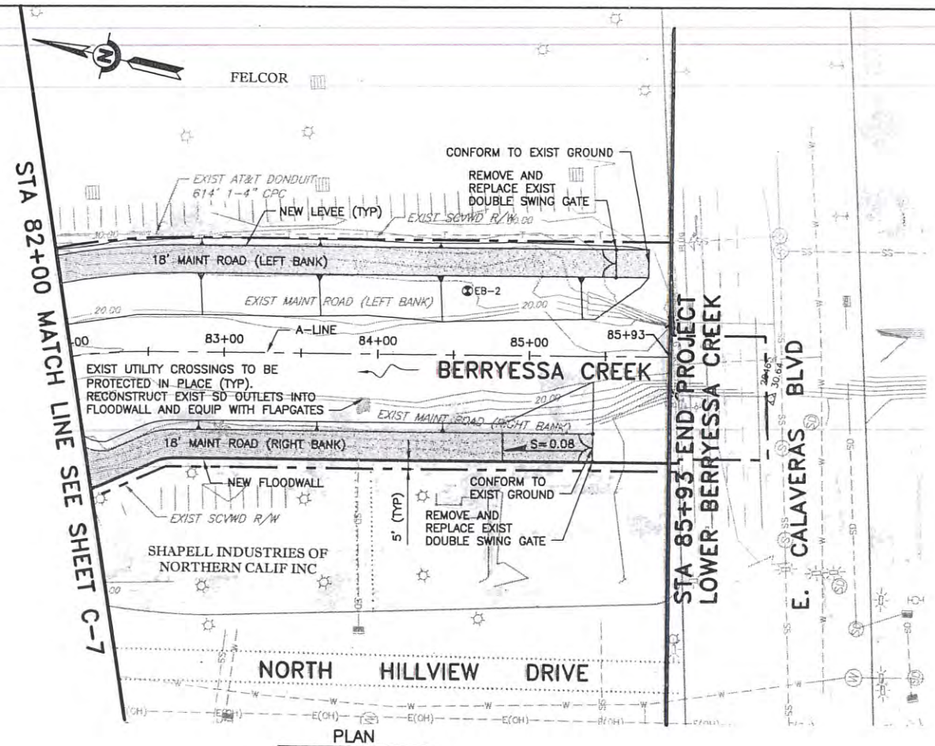

PLAN

SCALE 1" = 50'

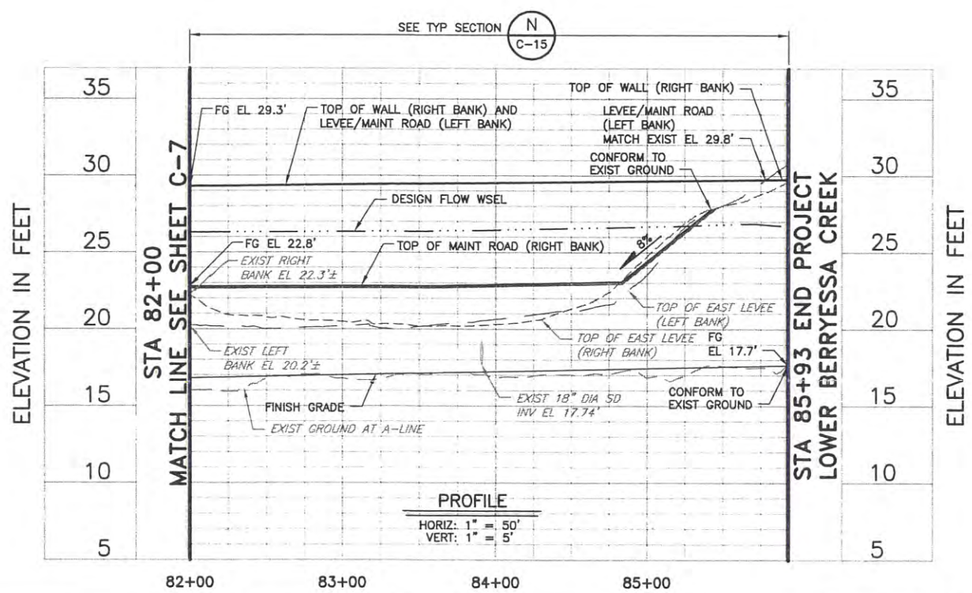

PROFILE

HORIZ: 1" = 50'
VERT: 1" = 5'

REV	DESCRIPTION	DATE	APPR.
	100% PRELIMINARY 01-09-14		

REFERENCE INFORMATION AND NOTES

1. AERIAL PHOTOGRAPHY WAS TAKEN JULY 2008.
2. LEFT AND RIGHT BANKS ARE VIEWED LOOKING UPSTREAM.

DATE	JAN 2014
DESIGN	B. TAN
DRAWN	J. FORD
CHECKED	T. IBARRA

ENGINEERING CERTIFICATION

REGISTERED PROFESSIONAL ENGINEER — T. D. J. IBARRA — No. 52387 Exp. 12/31/12 — CIVIL — STATE OF CALIFORNIA

PROJECT ENGINEER DATE

Santa Clara Valley Water District

PROJECT NAME AND SHEET DESCRIPTION:

LOWER BERRYESSA CREEK PROJECT

PLAN AND PROFILE
STA 82+00 TO STA 85+93 (A-LINE)

SCALE	PROJECT NUMBER
AS SHOWN	40174004
VERIFY SCALES 0 1"	SHEET CODE: C-8
IF NOT ONE INCH ON ORIGINAL DRAWING THIS SHEET, ADJUST SCALES ACCORDINGLY	SHEET NUMBER: 32 OF XX

USERNAME: JENNFORD Wed 12 Dec 2012 04:32pm
FILENAME: K:\Active Projects\MP-4017400A\Lower Berryessa Creek Project\Sheet\C-08

DOCUMENT NUMBER: BER_CY-C-4017-XXXXX

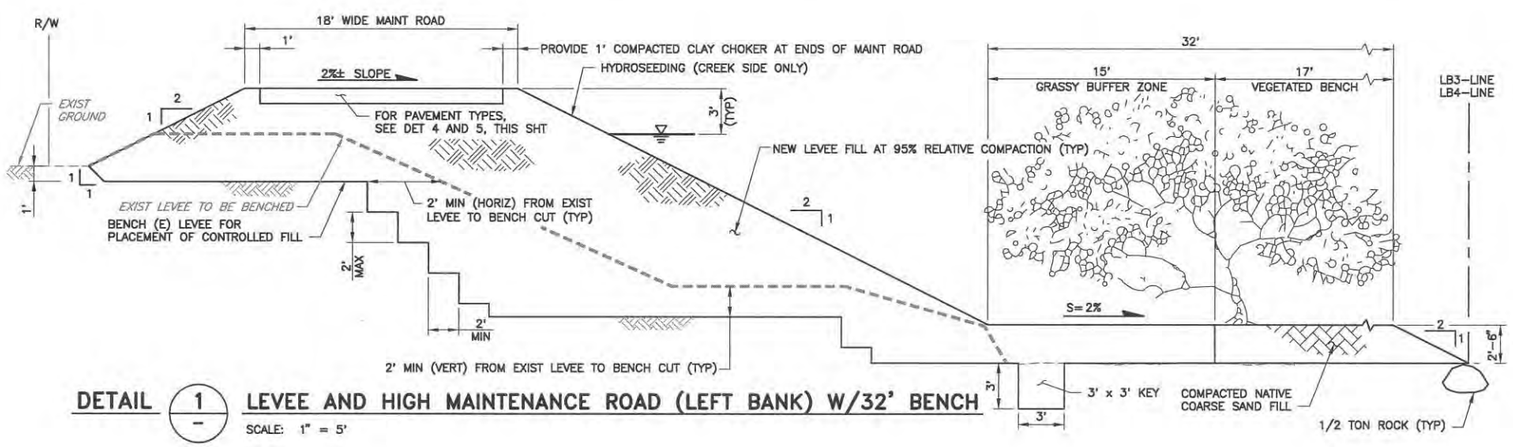

DETAIL 1 — LEVEE AND HIGH MAINTENANCE ROAD (LEFT BANK) W/32' BENCH

SCALE: 1" = 5'

Santa Clara Valley Water District

PROJECT NAME AND SHEET DESCRIPTION:	SCALE	PROJECT NUMBER
LOWER BERRYESSA CREEK PROJECT	AS SHOWN	40174004
	VERIFY SCALES 0 1" BAR IS ONE INCH ON ORIGINAL DRAWING IF NOT ONE INCH ON THIS SHEET, ADJUST SCALES ACCORDINGLY	FIGURE 11
RIPARIAN BENCH DETAIL		1 OF 1

USERNAME: Pathley 2/5/2014 10:33 AM
FILENAME: K:\Active Projects\WP-40174004\Lower Berryessa Creek Project\Sheet\Figure\Figure 11.dwg

EXHIBIT D

SCVWD Invasive Plants List

INVASIVE SPECIES LIST FOR LOWER BERRYESSA FLOOD PROTECTION PROJECT*

Species	Common Name	Life Form
Acacia spp.	acacia	tree
Ailanthus altissima	tree of heaven	tree
Arundo donax	giant reed	perennial grass
Broom spp.	Broom species	shrub
Casuarina cunninghamiana	river she-oak, beefwood	tree
Centaurea solstitialis	star thistle	annual herbaceous
Conium maculatum	poison hemlock	annual/biennial
Cortaderia spp.	pampas grass, jubata grass	perennial grass
Cotoneaster spp.	cotoneaster	tree
Cynara cardunculus	artichoke thistle	perennial herbaceous
Delairea odoata	Cape Ivy	vine
Dittrichia graveolens	stinkweed	annual herbaceous
Eucalyptus spp.	eucalyptus, gum	tree
Foeniculum vulgare	fennel	perennial herbaceous
Fraxinus spp.	ash	tree
Hedera spp.	English ivy, Algerian ivy	vine
Juglans spp. (J. regia, J. californica)	walnut	tree
Lepidium latifolium	pepperweed	perennial herbaceous
Ligustrum spp.	privets	tree/shrub
Myriophyllum aquaticum + spicatum	parrotfeather	aquatic
Nicotiana glauca	tree tobacco	tree/shrub
Olea europaea	olive	tree
Palm Spp. (Phoenix canariensis, Washingtonia robusta)	palms	tree
Phalaris aquatica	Harding grass	perennial grass
Phragmites australis	common reed	perennial grass
Populus nigra 'Italica'	Lombardy poplar	tree
Quercus ilex	holly oak	tree/shrub
Rhamnus alaternus	Italian buckthorn	tree/shrub
Ricinus communis	castor bean	annual, biennial
Robinia pseudoacacia	black locust	tree
Rubus armeniacus	himalayan blackberry	vine
Salix babylonica (and hybrids)	weeping willow	tree
Schinus molle	Peruvian pepper tree	tree
Sesbania punicea	red sesbania, rattlebox	perennial herbaceous
Spartina alterniflora	Alantic cordgrass	perennial grass
Tamarix ramosissima	salt cedar	tree/shrub
Ulmus spp.	elm	tree
Vinca major	vinca, periwinkle	perennial herbaceous

* Taken from Attachment D to RWQCB Order r2-2014-0015, Waste Discharge Requirements and Water Quality Certification for SCVWD Stream Maintenance Program, Santa Clara County

Lower Berryessa Creek and Lower Calera Creek Flood Improvement Project – CWA 401 Certification

Sediment Characterization Plan for the Santa Clara Valley Water District Multi-Year Stream Maintenance Program, November 2013

SEDIMENT CHARACTERIZATION PLAN

FOR THE
SANTA CLARA VALLEY WATER DISTRICT
MULTI-YEAR STREAM MAINTENANCE PROGRAM

Revised by

Ray Fields
Project Manager
Stream Maintenance Program Unit

Kristen O'Kane
Stream Maintenenace Program Unit Manager
Stream Stewardship Unit

Under the Direction of

Chris Elias
Deputy Operating Officer
Watershed Operations and Maintenance Division

November 2013

TABLE OF CONTENTS

	Page
INTRODUCTION	3
PURPOSE	3
SCOPE	4
OBJECTIVES	4
SAMPLING METHODS	5
SAMPLE COLLECTION	7
SAMPLE CONTAINERS AND SAMPLE VOLUMES	8
DECONTAMINATION PROCEDURES	8
SAMPLE PRESERVATION	8
CHAIN OF CUSTODY PROCEDURES	8
SURVEY OF SAMPLING LOCATIONS	9
ANALYTICAL PROCEDURES	9
RATIONAL FOR ANALYTICAL TEST METHOD SELECTION	9
QUALITY CONTROL	10
LABORATORY	10

Introduction

The Santa Clara Valley Water District (District) conducts sediment removal, vegetation management, bank protection repairs, minor maintenance, and canal maintenance activities in channels/creeks for the purpose of alleviating the potential for local flooding problems and to meet the requirements of the Federal Emergency Management Agency for flood protection. Under the aforementioned activities of the Multi-Year Stream Maintenance Program (SMP), channel/creek sediment is often removed as a result of these activities. In order to effectively manage the removal and disposal of the sediments removed as a result of these activities, it is necessary to characterize the chemical and physical properties of the sediments (or also known as creek material as some of the tested material is from the creek banks or stockpiles, etc.). This characterization allows the District to (1) effectively plan for disposal of the sediments and (2) assist with determining the best management practices (BMP) to implement in order to avoid and minimize impacts to water quality, aquatic life, and Beneficial Uses as specified in the San Francisco and Central Coast Water Water Quality Control Boards' (Water Board) Basin Plans. The sediment characterization plan proposed for the District's SMP, as presented herein, is a result of the District's sediment testing and evaluation effort, and continuous improvement process based on guidance from regulatory agencies and other stakeholders, since 1997.

Purpose

According to the Basin Plans, the Water Boards establish and enforce Waste Discharge Requirements (WDRs) for point and nonpoint source of pollutants at levels necessary to meet numerical and narrative water quality objectives. The sediment tests performed by the District each year, as part of its SMP are based on the historic occurrence of pollutants within Santa Clara Valley streams, in accordance with the Basin Plans' water quality objectives, and the Water Boards' WDR through a stakeholder process. The stakeholder process and lessons learned meetings involved participation of the Water Boards, the California Department of Fish and Wildlife (DFW), the U.S. Environmental Protection Agency (EPA), the U.S. Army Corps of Engineers (Corps), and various environmental organizations which assisted the District in continuous evaluation and improvement of the sediment characterization plan.

There are four main reasons for characterizing the sediments described as follows:

Landfill Acceptance

Landfills require creek sediment to be characterized before they accept the material for disposal.

Reuse Sites

The evaluation of test results for the placement of excavated materials in beneficial reuse sites. The beneficial reuse options include wetland creation and restoration, levee maintenance, and construction fill. Material reused within the 500 feet upstream or downstream is done without sediment testing with prior approval by the Regional Water Board.

The San Francisco and Central Coast Regional Water Quality Control Boards

The Water Boards have required characterization of the materials to determine if the proposed disposal method is acceptable. The Water Boards must ensure that the disposal of the material will not pose a threat to the waters of the State. The Water Boards are interested in determination of total mercury and polychlorinated biphenyls (PCB's) in residual sediment after sediment removal.

The California Department of Fish and Wildlife

DFW requests that the materials be characterized to determine if they will adversely impact fish and wildlife as the removal operations may cause sediments to be re-suspended and migrate downstream where it may have an impact on fish and wildlife. DFW defers to the Water Boards for the determination of suitability for creek material removal.

Scope

Under the SMP, sediment will only be tested using the San Francisco Bay Regional Water Quality Control Board's Beneficial Reuse of Dredged Materials: Sediment Screening and Testing Guidelines (May 2000) to facilitate any beneficial reuse of sediment generated by the District. The physical and chemical properties of sediments tested by the District include metals, pesticides and organophosphorous compounds, polychlorinated biphenyls, polynuclear aromatic hydrocarbons, moisture content, chloride, pH, total sulfides, ammonia, and toxicity (as described below).

This sampling plan documents sampling and analytical procedures which will be utilized for the creek sites under the SMP. It is not intended to be a full characterization of all the stream sediments. The Sediment Characterization Plan is primarily designed to characterize sediment designated for removal (using composite, continuous core and residual sediment sampling methods). Residual sediment samples will only be collected in an attempt to characterize the sediment that may be subject to erosion and transport during flows.

The Sediment Characterization Plan addresses the following sampling methods designed to meet the overall objectives of landfill acceptance, sediment reuse sites, water quality protection, and fish and wildlife protection:

1. Composite sediment sampling
2. Continuous Core sampling
3. Residual sediment sampling

Objectives

The specific objectives of the Sediment Characterization Plan are as follows:

1. Characterize the sediments for acceptance by landfills.

2. Characterize the sediments to determine their suitability for beneficial reuse (i.e., non-landfill reuse sites).

3. Compliance with regulatory requirements for the sediment removal activities.

4. Provide data for evaluation of the feasibility of long-term disposal, reuse, and recycling opportunities for sediment generated by the District.

Sampling Methods and Procedures

This section describes the frequency of sampling and the location of sample collection at the SMP sites involving sediment removal activities. From both the regulatory and scientific perspectives, the primary objectives of a sampling plan for a solid material are twofold: namely, (1) to collect samples that are representative samples as exhibiting average properties of the whole solid material and (2) to collect samples that will allow measurements of the chemical properties of the waste that are both accurate and precise.

Sediment samples will be collected for characterization of sediment designated for removal and analyzed in accordance with the contaminants listed on Table 4 Recommended Sediment Chemistry Screening Guidelines for Beneficial Reuse of Dredged Material (Re-use Guidelines) from the Water Board's Basin Plan. Sampling parameters/analytes listed in Table 4 may be modified after a history of sampling is obtained. This may result in not requiring monitoring for some of these contaminants under certain situations or at certain locations, or adding more parameters/analytes if deemed necessary by the Executive Officer of the Water Board.

Reliable information concerning the chemical properties of a solid waste is needed for the purpose of comparing chemical properties with applicable regulatory thresholds. For chemical information to be reliable, it must be accurate and precise. Accuracy is usually achieved by incorporating some form of randomness into the selection process for the samples that generate the data. Precision is most often obtained by selecting an appropriate number of samples.

For this Sediment Characterization Plan, the District will utilize a systematic random sampling technique generated by the sediment sampling database, in which all sampling points from a population are randomly selected. The advantages of systematic random sampling over other sampling techniques are the ease with which samples are identified, and collected, an increase in precision, and to collect representative data on chemical properties. All samples shall be collected in accordance with the most recent U.S. EPA Guidelines and sampling methodologies. The methods of analyses and detection limits must be appropriate for the expected concentrations. Specific methods of analyses must be identified. If methods other than U.S. EPA – approved methods of Standard Methods are used, the exact methodology must be submitted for review and approved by the Executive Officer of the Water Board.

The following techniques provide a general sampling approach and will suffice for most projects. Where these techniques would not provide a representative sample of the project area, Regional Board staff will be consulted to provide additional sampling direction.

Composite Sediment Samples

The purpose of composite sediment sampling is to conduct the widest range of characterization along the project sites' lengths and widths in order to capture the most variation of the area. This broader scope of randomly generated 4 point sampling will give a greater sense of the variability of the channel material than a specific sample point.

Composite Sample Collection Frequency

In order to characterize the sediment, one composite, which consists of 4 random samples, in-situ sample shall be collected and analyzed approximately every 4,000 cys. Approximately one sample shall be collected every 1,000 cys. These samples will be composited together by the laboratory. The length of the channel is also taken into consideration as the District's database will generate sampling points based on the length of the project area. As such, projects with long project lengths will have sample points farther apart in order to better characterize the variability in sediment contaminants along the entire length of the worksite.

Composite Sample Locations

The location of each sample at the Sediment Removal Program sites must be selected in the following three dimensions: (1) the creek station, or the location along the length of the creek; (2) the location along the creek cross section; and (3) the depth below ground surface (bgs). With these parameters, a sample point is randomly generated. The rationale for selection of a sampling location in all three dimensions is described below:

Composite Sample Depth

The sampling depth of the composite samples are also randomly generated varied from surface sampling to maximum excavation depth of the proposed project.

Continuous Core Sediment Samples

The purpose of continuous core sampling is to take samples at selected locations (e.g. below outfalls, depression areas of the creek, likely contaminated areas) where the highest likelihood of contamination exists in the project site. This type of sample is not taken on the banks (above the toe of the channel) nor from stockpiles, only from within toe to toe of the channel.

Continuous Core Sample Collection Frequency

One continuous core sample is taken every 4000 cubic yards per project site.

Continuous Core Sample Locations

The location of the sample is determined in the field upon attempting to locate areas of depression or outfalls within the project site. As these features are not always apparent, the location will sometimes have to be placed in the most likely areas of these features.

Continuous Core Sample Depth

The depth of the sample is randomly generated by the District's sediment sampling database and printed on the sediment sampling plan generated in the office and used out in the field.

Residual Sediment Samples

The purpose of residual sediment sampling is to conduct limited characterization of sediment left behind after sediment removal from earthen channels and creeks. The exposed sediment in the channel/creek bottom will only be sampled and analyzed for total mercury and PCB.

Residual Sample Collection Frequency

Residual sediment samples will be collected at one every 4000 cys on earthen channels.

Residual Sample Locations

This type of sample will be collected at each earthen channel/creek site. The location of the residual sample will coincide with the continuous core sample.

Residual Sample Depth

The samples will be collected from within 1 foot below the planned maximum depth of excavation for that project.

Sample Collection

All samples shall be collected by means of a hand trowel, a hand auger, or another sampling method approved by the regulatory agencies. The individual collecting the sample will have the discretion of choosing the sampling method which is the most efficient to perform.

Sampling will be conducted in accordance with the methods described below:

Hand Trowel Procedure

1. Remove vegetation and woody debris from the ground surface.
2. If collecting a subsurface sample, use a shovel to dig down to the desired sampling interval.
3. Use a stainless-steel hand trowel to collect soil.
4. Place soil in an appropriate sampling container.
5. Replace all excavated soils to their original location (i.e., backfill the sampling hole).

Hand Auger Procedure

1. Remove vegetation and woody debris from the ground surface.
2. Use the hand auger to advance down to the top of the sampling interval.
3. Use a hand auger to collect soil from the desired depth.

4. Use a clean (decontaminated) tool to scoop the soil out of the auger and place in an appropriate sampling container.

5. Replace all excavated soils to their original location (i.e., backfill the sampling hole).

6. If hand auger refusal is encountered, sample will be collected from an alternate location.

Sample Containers and Sample Volumes

All samples shall be collected using wide-mouthed glass jars or other sampling containers as directed or supplied by the laboratory.

Sampling volume and number of containers necessary shall be specified by the District's contract of internal laboratory. It is anticipated that multiple containers of sediment will need to be collected at each location.

Decontamination Procedures

All equipment used to collect soil samples (hand trowel or hand auger) shall be decontaminated prior to collecting each sample, on-site. Equipment shall be decontaminated by at least rinsing the equipment twice with water, drying and then visually inspecting to ensure that there are no residual particles from the previous sample. The final rinse shall be with de-ionized or distilled water.

Sample Preservation

All samples shall be immediately preserved in accordance with the EPA sampling and testing procedures. This is most commonly done by placing the samples in an insulated cooler with ice. Samples may also be stored in a refrigerator.

The laboratory shall immediately record the temperature of the sample containers upon receipt of the samples, if required by the EPA sampling and testing procedures for the contaminants that are being analyzed.

Chain of Custody Procedures

Standard chain of custody procedures shall be used throughout the sampling collection procedures. A chain of custody shall be prepared for all samples. Each individual who has responsibility for the samples is required to sign the chain of custody upon relinquishing the samples to another party. The receiving party taking custody of samples shall also sign the chain of custody form.

When in the field, samples shall always be in sight of the individual responsible for the samples, or the samples shall be stored within a locked vehicle. If the samples are stored in an office prior to delivery to the laboratory, the samples shall be stored in a secure location. Applicable sample storage and preservation procedures shall be followed.

Survey of Sampling Locations

All sampling locations will be identified by Geographic Information Stationing.

Analytical Procedures

Every sediment sample location, with the exception of residual samples, shall be sampled for the full list of parameters/analytes listed in Table 4 for the Reuse Guidelines. Sampling parameters/analytes listed in Table 4 may be modified after a history of sampling is obtained. This may result in not requiring monitoring for some of these contaminants under certain situations or at certain locations, or adding more parameters/analytes if deemed necessary by the Executive Officer.

Rational for Analytical Test Method Selection

The rationale used for selecting test methods is based largely on the laboratory's ability to meet the detection limit requirements of the Table 4. All methods are EPA standards but may vary from time to time (based on changes from the EPA). Although, the driving force behind the selection of the test methods will be Water Board's Re-use Guidelines.

Moisture Content

Sediments in creeks naturally contain moisture; moisture content may fluctuate during the year and is dependent on creek flows, groundwater elevation, and other local conditions. The moisture content of in-situ soils will be higher than the moisture content of excavated sediments, due to the natural process of evaporation and infiltration.

Analysis of moisture content is required for Class III landfill acceptance for wet soils. In addition, it is necessary to measure the moisture content in order to determine the dry weight concentrations of constituents within the sediment.

Selected Test Method and Frequency of Testing

All samples except residual sediment samples shall be analyzed for moisture content by EPA Method 160.3 or the most current prescribed method.

Toxicity

Creek sediments may be toxic due to nonpoint source pollutants which may have been deposited into the creeks. Toxicity is of concern if the sediment is to be reused. Sediment toxicity test will be conducted only on composite samples from sites where the waters may not be controlled during sediment removal operations due to tidal action; therefore toxicity sampling shall only be conducted on sediment removal projects which would not divert the water around the project site during excavation.

Selected Test Method and Frequency of Testing

All samples in tidal areas only, except residual sediment samples, shall be tested for toxicity by means of a toxicity screening bioassay, by the test method specified in California Code of Regulations, Title 22. The samples will be tested using Eohaustorius estuarius species, unless otherwise specified by the EPA.

Methyl-Mercury Testing

Past mining operations allowed mining tailing and debris discharge to some creeks and this has increased mercury levels in sediments and soils in those watersheds, specifically the Guadalupe Watershed.

Selected Test Method and Frequency of Testing

Only the following creeks will be required to have the additional analysis of methyl mercury be performed for all composite samples, in accordance with EPA 1630:

Alamitos Creek
Guadalupe Creek
Guadalupe River
Los Gatos Creek
Randol Creek.

Quality Control

A QA/QC plan is an important component of a monitoring program involving extensive field sampling and laboratory analyses. The two objectives of the QA/QC plan are: 1) to provide a means of ongoing control and evaluation of the sampling and analysis procedures; and 2) to quantify data precision and accuracy for use in data interpretation. Duplicate samples are no longer required. The QA/QC plan will be followed in all phases of the monitoring program including sampling and validation reporting. QA/QC requirements are noted below.

The District will utilize a sampling contractor or internal staff to conduct field sampling. The assigned field staff and/or contractor will be responsible for managing all field sampling equipment. The actual assignment of sampling areas and analysis are given to the sampling staff by the Stream Maintenance Program Project Manager (PM). Verification of equipment, analysis, chain of custodies, etc. will also be conducted by the PM.

All equipment used for field sampling will be kept in good working order and as required, will be tested and/or calibrated before leaving the office. Verification of working order/calibration (if necessary) should be re-verified, visually, upon arrival at the site to ensure the instruments are in proper working condition.

Laboratory

Whichever laboratory is used to perform analysis under this sediment sampling plan, they must be certified by the State of California Department of Health Services under the Environmental Laboratory Accreditation Program. For sub-labs that are out of state, they must hold current certification in their state's accreditation program. Further, the contract lab is required to perform their own quality control tests with the results published in the final lab report.

Reporting

Upon receipt of the analytical results from the laboratory, the District will submit the results to the Water Board and request approval for reuse as described below.

The District shall attempt to compile the results in 2 to 3 submittals to the Water Board

1. For ease of review, only the contaminants that test above the Water Board's Table 4 detection limits will be reported to the Water Board.

2. The entirety of the results, for detected and non-detected, shall be maintained in the District's database and made available upon request. Further, the signed lab copy of the results shall be maintained for no less than 3 years by the District
3. For project site sediments that are going to landfill, the Water Board is only required to approve the removal of the material as the landfill will approve acceptance to their disposal facility.

Table 4: Recommended Sediment Chemistry Screening Guidelines for Beneficial Reuse of Dredged

ANALYTE	Wetland Surface Material		Wetland Foundation Material	
	Concentration	Decision Basis	Concentration	Decision Basis
METALS (mg/kg)				
Arsenic	15.3	Ambient Values	70	ER-M
Cadmium	0.33	Ambient Values	9.6	ER-M
Chromium	112	Ambient Values	370	ER-M
Copper	68.1	Ambient Values	270	ER-M
Lead	43.2	Ambient Values	218	ER-M
Mercury	0.43	Ambient Values	0.7	ER-M
Nickel	112	Ambient Values	120	ER-M
Selenium	0.64	Ambient Values		
Silver	0.58	Ambient Values	3.7	ER-M
Zinc	158	Ambient Values	410	ER-M
ORGANOCHLORINE PESTICIDES/PCBS (µg/kg)				
DDTS, sum	7.0	Ambient Values	46.1	ER-M
Chlordanes, sum	2.3	TEL	4.8	PEL
Dieldrin	0.72	TEL	4.3	PEL
Hexachlorocyclohexane, sum	0.78	Ambient Values		
Hexachlorobenzene	0.485	Ambient Values		
PCBs, sum	22.7	ER-L	180	ER-M
POLYCYCLIC AROMATIC HYDROCARBONS (µg/kg)				
PAHs, total	3,390	Ambient Values	44,792	ER-M
Low molecular weight PAHs, sum	434	Ambient Values	3,160	ER-M
High molecular weight PAHs, sum	3,060	Ambient Values	9,600	ER-M
1-Methylnaphthalene	12.1	Ambient Values		
1-Methylphenanthrene	31.7	Ambient Values		
2,3,5-Trimethylnaphthalene	9.8	Ambient Values		
2,6-Dimethylnaphthalene	12.1	Ambient Values		
2-Methylnaphthalene	19.4	Ambient Values	670	ER-M
2-Methylphenanthrene		Ambient Values		
3-Methylphenanthrene		Ambient Values		
Acenaphthene	26.0	Ambient Values	500	ER-M
Acenaphthylene	88.0	Ambient Values	640	ER-M
Anthracene	88.0	Ambient Values	1,100	ER-M
Benz(a)anthracene	412	Ambient Values	1,600	ER-M
Benzo(a)pyrene	371	Ambient Values	1,600	ER-M
Benzo(e)pyrene	294	Ambient Values		
Benzo(b)fluoranthene	371	Ambient Values		
Benzo(g,h,i)perylene	310	Ambient Values		
Benzo(k)fluoranthene	258	Ambient Values		
Biphenyl	12.9	Ambient Values		
Chrysene	289	Ambient Values	2,800	ER-M
Dibenz(a,h)anthracene	32.7	Ambient Values	260	ER-M
Fluoranthene	514	Ambient Values	5,100	ER-M
Fluorene	25.3	Ambient Values	540	ER-M
Indeno(1,2,3-c,d)pyrene	382	Ambient Values		
Naphthalene	55.8	Ambient Values	2,100	ER-M
Perylene	145	Ambient Values		
Phenanthrene	237	Ambient Values	1,500	ER-M
Pyrene	665	Ambient Values	2,600	ER-M

THIS PAGE INTENTIONALLY LEFT BLANK

Dewatering Plan
Construction within Lower Berryessa Creek Channel
June 10, 2014

1. Objectives

- Temporally divert water from reaches of Lower Berryessa Creek in an environmentally sound manner to facilitate construction of the creek channel improvements.
- Perform dewatering in a manner that furthers the water quality objectives of the San Francisco Bay Basin Plan.
- Maintain natural flow conditions in the creek channel upstream and downstream of the creek reach under active construction.
- Prevent erosion, sedimentation, and siltation from occurring upstream or downstream creek reach under active construction.

2. Design Event

The design flow is 20 cubic feet per second (cfs) which is the likely maximum flow in Lower Berryessa Creek during the construction period of storm of May 1 through October 15.

3. Schedule

The dewatering system will be in place and functioning prior to the start of in-channel construction work and will be removed only after all construction work on dewatered channel reach is complete. The construction period will be during the dry season from May 1 to October 15 for non-tidally influenced reaches (i.e. Reaches C through G of Lower Berryessa Creek) and from June 15 to October 15 for tidally influenced reaches (Reaches A and B of Lower Berryessa Creek).

Installation of the dewatering system will take approximately one week, and will commence at an allowed start date per the regulatory approvals. After construction activities at a reach are completed, the coffer dams and diversion system will be removed within 48 hours. Flows will be restored to the new construction reach in a manner that minimizes erosion. Ponded water will be re-directed into the established low-flow channel in a gradual manner to avoid an erosive surge of water.

4. Description of Dewatering System

4.1 System Overview

The dewatering system will be composed of a coffer dams spanning the full width of the creek channel located at the upstream and downstream boundaries of the construction reach, 36-inch diameter fused high-density polyethylene (HDPE) pipes to convey the diverted water around the construction reach, polychlorinated vinyl (PVC) pipes to convey water discharged from drain outlets to the HDPE trunk line, and riprap or equivalent erosion protection for the system discharge point.

4.2 Coffer Dams

Coffer dams will be 5 to 6 ft in height (see calculations in Appendix A) and constructed using a combination of gravel-filled sandbags and sheet plastic with a minimum thickness of 6 mil. The gravel fill for the sandbags will contain no more than 15% fines. The gravel-filled sandbags will be placed on top of the plastic material, which will be laid above the invert for the 36-inch HDPE pipe. The width of the invert must be enough to wrap the installed sandbags in a "burrito-wrap" configuration. The sandbags will stacked in a staggered pyramid-like fashion (see Detail 1, Figure 1). After the design height has been reached, the original sheet plastic shall be placed on top of the sandbags and secured with additional sand bags. Sandbags on top of the sheet plastic will be spaced no more than 3 ft apart. To maximize flow inflow through the 36-inch HDPE pipe, the upstream configuration of the coffer dam will have a funnel shape with the portions closest to the channel banks wider than the mid-channel portion of the coffer dam. The top of the dam will be lowest in height at the center of the dam and increase in height towards the banks, thereby directing overtopping water into the pre-existing low flow creek channel.

4.3 Pipe System

The pipe system will be composed of a 36-inch diameter fused HDPE pipe trunk line and 6- to 18-inch PVC collector pipes. The system will use pumps connected to the 36-inch trunk line to convey water impounded by the upstream coffer dam and water collected from storm drain outlets to the low flow creek channel below the lower coffer dam. Sandbags and a non-shrink grout plug will be installed on each storm drain outlet along the active reach to divert water into the PVC collector pipe. 4" x 4" wood struts or equivalent materials would be used to support the collector pipes (see Detail 2, Figure 1). If gravity flow is not effective in conveying water from the storm drain outlets to the HDPE trunk line, pumps will be used as necessary. Riprap (1/4 to 1/2 ton) will be placed at the downstream discharge point of the HDPE pipe to prevent erosion of the channel bed. If necessary, one or more check dams, composed of straw/hale bales secured by wooden stakes (straw/hale bales) would be installed to slowly reduce water velocities and prevent bed erosion.

4.4 Groundwater

All construction work will be implemented under dry creek conditions. If groundwater seepage occurs within the dewatered reach, pumps will be used to discharge the seepage flows to intakes of the 36-inch HDPE trunk line. When discharging into the intakes of the 36-inch pipe, the top opening of the intake will be sealed to maintain air pressure within the pipe.

4.5 Tidal Influences

The maximum elevation for the mean high-high tidal water influence is estimated at approximately 7.5 feet mean sea level (MSL). This tidal influence extends a short distance upstream of the Abel Street crossing (approximately Station 29+00). The downstream coffer dam for the reaches at or downstream of Station 29+00 would be set at elevation 8 feet MSL to prevent the intrusion of tidal water upstream from the coffer dam. Since tidal waters can potentially reduce the flows downstream or even back up the flows upstream, pumps will be on standby to transfer excess flows downstream of the coffer dam.

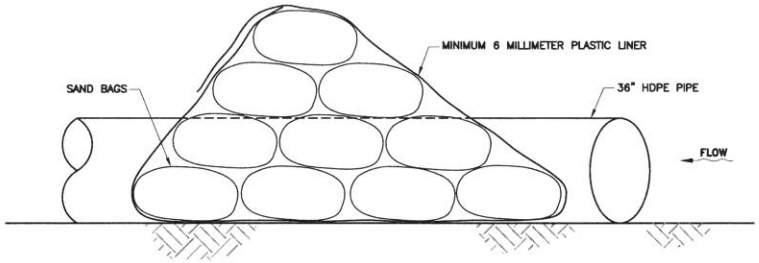

DETAIL 1 – TYPICAL COFFER DAM

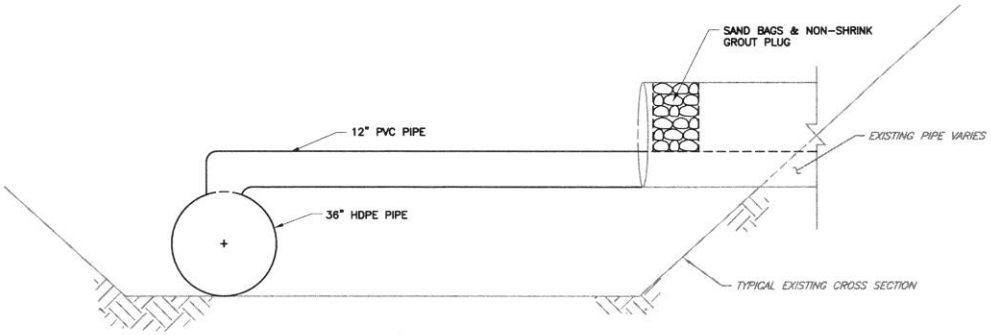

DETAIL 2 – TYPICAL TEMPORARY WATER DIVERSION INTAKE DETAIL

FILENAME: K:\Active Projects\MP-40174004\Lower Berryessa Creek Project\Sheet\Figure\Division Pike Details.dwg

Santa Clara Valley Water District

PROJECT NAME AND SHEET DESCRIPTION:	SCALE	PROJECT NUMBER
LOWER BERRYESSA FLOOD PROTECTION TEMPORARY WATER DIVERSION PIPE DETAILS	NOT TO SCALE VERIFY SCALES 0 1/2" BAR IS ONE INCH ON ORIGINAL DRAWING IF NOT ONE INCH ON THIS SHEET, ADJUST SCALES ACCORDINGLY	40174004 FIGURE 1 1 OF 1

4.6 System Removal

Once the construction work is completed at a dewatered reach, the diversion system and coffer dams will be removed within 48 hours of completion. Removal of the diversion pipe will start at the downstream terminus of the system and proceed upstream. Flows will be restored within the new construction area in a manner that minimizes erosion. Ponded flows will be re-directed into the established low-flow channel. Flows will be gradually restored to the channel to avoid a potentially erosive surge of water. All equipment and materials used in the dewatering system will be removed from the creek channel for re-use or proper disposal.

5. Dewatered Channel Reaches

The reaches of Lower Berryessa channel that will be dewatered are given in Table 1. The boundaries of these reaches may be modified somewhat in the field to increase construction efficiency.

Table 1: Definition of Channel Reaches

Reach No.	Description	Stations
1	Lower Penitencia/Lower Berryessa Creek confluence to Abel Street Bridge	0+00 to 22+50
2	Upstream of Abel Street to downstream of North Milpitas Boulevard	22+50 to 54+00
3	Downstream of North Milpitas Boulevard to downstream of Pedestrian Bridge	54+00 to 71+00
4	Downstream of Pedestrian Bridge to upstream of East Calaveras Boulevard	71+00 to beyond 85+93

At each reach, the full width of the channel will be dewatered. Each reach may be dewatered at different times within the same construction season.

6. Water Quality Monitoring

6.1 Monitoring Locations

The dewatering contractor will be responsible for visual observations, collection of water samples, and transportation of samples in a timely manner to an accredited laboratory testing. Water samples will be collected from the creek channel above and below the dewatered zone and from the HDPE pipe system within the dewatered zone. The HDPE pipe system will include air vents at maximum intervals of 500’ in to allow collection of water samples from the pipes. During normal operation, the air vents will remain closed; the vents will be opened to obtain water sample. Water samples will be collected at the locations listed in Table 2.

Table 2: Water Quality Sample Collection Points	
Zone	**Locations**
Upstream from dewatered zone	100 ft above coffer dam
Dewatered Zone	500 ft intervals (minimum)
Downstream from dewatered zone	100 ft below zone

6.2 Parameters, Frequency and Duration

Water quality testing will commence two days prior to installation of the dewatering system and will continue until one day after the dewatering system is completely removed. Observations, testing and sampling will be performed for the parameters listed in Table 3. Water quality readings will be submitted as part of daily QA/QC reports.

Table 3: Water Quality Testing Parameters		
Parameter	**Frequency of Sampling/Testing**	**Exceedance limit**
Turbidity	Twice daily*	Incremental increase by 5 NTUs if background <50 NTUs and 10 percent if background >=50 NTUs
pH	Twice daily*	>0.5 units deviation above or below ambient levels
Dissolved Oxygen	Twice daily*	Minimum of 5.0 mg/l or no change if background <5.0 mg/l
Temperature	Twice daily*	Increase by more than 5 °F > natural temperatures
Floating, suspended or deposited macroscopic particulate matter or foam; Alteration of apparent color beyond present natural background levels; Visible floating, suspended, or deposited oil or other products of petroleum origin	daily*	Visual observation only

*Daily is defined as each day in which construction work occurs in the channel reach. Typically this will be Monday through Friday except for holidays. If any construction occurs on a Saturday, Sunday, or holiday, water quality monitoring will occur on that day also.

6.2 Mitigation and Reporting

If the measured or observed quality of diverted water exceeds any of the parameter limits listed in Table 3, the contractor will immediately notify the Water District and investigate the potential source of the problem. If the contractor's operations are causing the problem, then the issue will be corrected immediately. If the source is outside of/beyond the project limits, the contractor will notify the Water District, who will then notify the regulatory agencies of the situation, so that the regulatory agencies can determine the proper response to the water quality issue.

The district will record the water sampling and testing data and report the assembled and certified data to the RWQCB on a periodic basis.

7. Best Management Practices (BMPs)

7.1 Applicable BMPs

The design and operation of the Lower Berryessa Creek dewatering system will conform to applicable SCVWD BMPs to prevent adverse water quality impacts. Table 4 lists the applicable BMPs and the subsections add project specific details.

Table 4: Water Quality BMPs Applicable to Lower Berryessa Creek Dewatering System

BMP No.	Title
WQ-1	Conduct Work from Top of Bank
WQ-2	Evaluate Use of Wheel and Track Mounted Vehicles in Stream Bottoms
WQ-3	Limit Impact of Pump and Generator Operation and Maintenance
WQ-4	Limit Impacts of Sediments on Water Quality
WQ-5	Limit Impacts From Staging and Stockpiling Materials
WQ-6	Stabilize Construction Entrances and Exits
WQ-8	Minimize Erosion from Removal of In-channel Vegetation
WQ-9	Limit Impact of Concrete Near Waterways
WQ-10	Isolate Work in Tidal Areas With Use of Coffer Dam
WQ-11	Isolate Work in Non-tidal Sites With Use of Diversion of Bypass
WQ-13	Use Seeding for Erosion Control, Weed Suppression, and Site Improvement
WQ-14	Manage Exposed Groundwater at Work Sites
WQ-16	Maintain Clean Conditions at Work Sites
WQ-17	Control Sediment/ Turbidity from Discharges
WQ-22	Prevent Water Pollution
WQ-23	Prevent Stormwater Pollution
WQ-24	Manage Sanitary and Septic Waste

7.2 Fish Rescue

Fish occurring in Lower Berryessa Creek consist of a mix of native and non-native minnows. No listed fish species are known or expected to be present. Based on the methodology and policy considerations contained in California Department of Fish and Wildlife Departmental Bulletin No. 2013-04, rescue of fish from Lower Berryessa Creek is not warranted due to the

potential for exceeding the carrying capacity of any relocation reaches and spread of disease. Therefore active fish relocation will not be pursued.

7.3 Pump Screens

All pumps intakes will be equipped with screens with mesh openings no greater than 5 mm in size to prevent the accidental intake of fish, amphibians, or reptiles.

7.4 Material Stockpiles

Construction materials will to be stored outside the creek channel until required for the project. Any stockpile materials not immediately removed for offsite disposal will be contained.

7.5 Equipment Use

No fueling or repair of equipment or vehicles will occur within the creek channel, Drip pans will be placed under all idling equipment. Any fluids released from equipment (e.g. motor oil, fuel, lubricants, hydraulic fluid) will be promptly cleaned up for proper offsite disposal.

7.6 Excess Volume of Impounded Water

If the volume of water impounded at the upstream coffer dam or seeping into the active channel reach exceeds the capacity of the dewatering system, the excess water will be pumped into baker tanks for temporary storage and proper disposal.

7.7 Inspections

Knowledgeable dewatering system contractor and/or SCVWD staff will inspect the dewatering system on a daily basis to ensure system integrity and proper functioning.

8. Contingency Plans

8.1 Storm Event

It is unlikely, but possible, that a dry season precipitation event could be of sufficient magnitude to exceed the design capacity of the dewatering system. To prevent damage to the system and adverse environmental impacts, the contractor will adhere to the requirements in Table 4.

Table 5: Dry Season Storm Contingency Plans

Event	Response
≥ 30% likelihood of significant precipitation	Inspect all BMPs and remedy identified deficiencies
≥ 50% % likelihood of significant precipitation	Maintain baker tanks and pumps at dewatering site and collect excess water as required
Precipitation causes violation of water quality standard	All construction operations cease until applicable water quality parameter is met

8.2 System Failure

The dewatering system could fail due to mechanical problems or unusually heavy flows exceeding the design flow. As a contingency, spare pipe materials, fittings, and pumps will be stored on site to facilitate timely repairs of damaged parts, thereby ensuring that the systems has a high degree of reliability and operability. In addition, additional pumps and baker tanks will be maintained on site. Excess flows will be filtered through the baker tanks and appropriately discharged downstream of the active reach.

In the case of actual or incipient system failure, the dewatering system contractor will notify SCVWD immediately. SCVWD will immediately perform all practical actions to remove sources of pollutants associated with the construction effort from the creek channel or prevent their entrainment by water flowing in the creek channel. This includes removing equipment and vehicles from the channel and protecting material stockpiles from in-channel flows.

APPENDIX A: Calculation of Coffer Dam Height

Santa Clara Valley Water District
5750 Almaden Expressway, San Jose 95118-3614, Phone 265-2600

Page 1 of
Charge No.
By ROGER NARSIM
Date 3/31/14
Checked by Date

Subject COFFER DAM HEIGHT CALCULATIONS FOR LOWER BERRYESSA CREEK

AVERAGE BED SLOPE = 0.0008 (SEE SHT C-2; STA 9+25, ELE: 6.2' STA 21+00, ELE = 7.1')

OUTLET PIPE HDPE 30" ϕ

AVERAGE SUMMER FLOW RATE ≈ 10 CFS

Q = DESIGN FLOW RATE FOR COFFER DAM = 20 CFS

USE $n = 0.013$

$\phi = 30''$, $A = 4.909$ SQ.FT $K = 410.1$, $K = \frac{Q}{\sqrt{S}}$

$$Q = \frac{1.486}{n} A R^{2/3} S^{1/2}$$

ASSUME SUBMERGED SOFFIT AT OUTLET.
HGL AT D/S = DIA. OF PIPE (2.5')

LOSS OF HEAD DUE TO FRICTION

$$h_f = S_f L = \left(\frac{Q}{K}\right)^2 L = (0.0024) \times L$$

PROPOSED LENGTH OF HDPE PIPE = 1000'

$$h_f = (0.0024) \times 1000 = 2.4'$$

$$V = \frac{Q}{A} = \frac{20}{4.909} = 4.07 \text{ feet per sec.}$$

$$0.2 \frac{V^2}{2g} \text{ (entrance loss)} + \frac{V^2}{2g} \text{ (velocity head)}$$

$$= 0.31'$$

TOTAL HEIGHT REQUIRED AT D/S END OF PIPE

= 2.5' (DIA. OF PIPE) + 2.4' + 0.31' = 5.21' (EGL)

ELE. DIFFERENCE = 0.0008 × 1000 = 0.8

ASSUME 1' OF FB

→ HEIGHT OF COFFER DAM = 5.21' − 0.8' + 1.0
= 5.41' USE 5'-6"

FC 807 (2-6-03)

printed on recycled paper

THIS PAGE INTENTIONALLY LEFT BLANK

DEPARTMENT OF THE ARMY
SAN FRANCISCO DISTRICT, U.S. ARMY CORPS OF ENGINEERS
1455 MARKET STREET, 16TH FLOOR
SAN FRANCISCO, CALIFORNIA 94103-1398

JUN - 4 2015

Regulatory Division

Subject: File No. 284400S

Ms. Melanie Richardson
Deputy Operating Officer
Watersheds Capital Division
Santa Clara Valley Water District
5750 Almaden Expressway
San Jose, California 95118

Dear Ms. Richardson:

This correspondence is in reference to your email of April 27, 2015, requesting a preliminary jurisdictional determination of the extent of navigable waters of the United States and waters of the United States occurring on within the Lower Berryessa project site encompassing approximately 11,825 linear feet of flood control channels in the City of Milpitas in eastern Santa Clara County, generally within the area bounded by Calaveras Boulevard to the south, I-880 to the west, Dixon Landing Road to the north, and I-680 to the east (37.4383338 °N, - 121.905098 °W).

All proposed discharges of dredged or fill material occurring below the plane of ordinary high water in non-tidal waters of the United States; or below the high tide line in tidal waters of the United States; and within the lateral extent of wetlands adjacent to these waters, typically require Department of the Army authorization and the issuance of a permit under Section 404 of the Clean Water Act of 1972, as amended (33 U.S.C. § 1344 *et seq.*). Waters of the United States generally include the territorial seas; all traditional navigable waters which are currently used, or were used in the past, or may be susceptible to use in interstate or foreign commerce, including waters subject to the ebb and flow of the tide; wetlands adjacent to traditional navigable waters; non-navigable tributaries of traditional navigable waters that are relatively permanent, where the tributaries typically flow year-round or have continuous flow at least seasonally; and wetlands directly abutting such tributaries. Where a case-specific analysis determines the existence of a "significant nexus" effect with a traditional navigable water, waters of the United States may also include non-navigable tributaries that are not relatively permanent; wetlands adjacent to non-navigable tributaries that are not relatively permanent; wetlands adjacent to but not directly abutting a relatively permanent non-navigable tributary; and certain ephemeral streams in the arid West.

The enclosed delineation maps entitled, "Preliminary Jurisdictional Determination SPN File Number 28440S Lower Berryessa Creek and Lower Calera Creek Flood Protection Improvements Project", in 18 sheets date certified April 30, 2015, depicts the extent and location of wetlands and other waters of the United States within the boundary area of the site that **may**

be subject to U.S. Army Corps of Engineers' regulatory authority under Section 404 of the Clean Water Act. This preliminary jurisdictional determination is based on the current conditions of the site, as verified during a field investigation of September 14, 2010 and a review of other data included in your previously submitted permit application materials. While this preliminary jurisdictional determination was conducted pursuant to Regulatory Guidance Letter No. 08-02, *Jurisdictional Determinations*, it may be subject to future revision if new information or a change in field conditions becomes subsequently apparent. The basis for this preliminary jurisdictional determination is fully explained in the enclosed *Preliminary Jurisdictional Determination Form*. You are requested to sign and date this form and return it to this office within two weeks of receipt.

You are advised that the preliminary jurisdictional determination may **not** be appealed through the U.S. Army Corps of Engineers' *Administrative Appeal Process*, as described in 33 C.F.R. Section 331 (65 Fed. Reg. 16,486; Mar. 28, 2000). Under the provisions of 33 C.F.R Section 331.5(b)(9), non-appealable actions include preliminary jurisdictional determinations since they are considered to be only advisory in nature and make no definitive conclusions on the jurisdictional status of the water bodies in question. However, you may request this office to provide an approved jurisdictional determination that precisely identifies the scope of jurisdictional waters on the site; an approved jurisdictional determination may be appealed through the *Administrative Appeal Process*. If you anticipate requesting an approved jurisdictional determination at some future date, you are advised not to engage in any on-site grading or other construction activity in the interim to avoid potential violations and penalties under Section 404 of the Clean Water Act and Section 10 of the Rivers and Harbors Act. Finally, you may provide this office new information for further consideration and request a reevaluation of this preliminary jurisdictional determination.

You may refer any questions on this matter to Lisa Mangione of my Regulatory staff by telephone at 415-503-6763 or by e-mail at lisa.mangione@usace.army.mil. All correspondence should be addressed to the Regulatory Division, South Branch, referencing the file number at the head of this letter.

The San Francisco District is committed to improving service to our customers. My Regulatory staff seeks to achieve the goals of the Regulatory Program in an efficient and cooperative manner, while preserving and protecting our nation's aquatic resources. If you would like to provide comments on our Regulatory Program, please complete the Customer Service Survey Form available on our website: http://www.spn.usace.army.mil/Missions/Regulatory.aspx.

Sincerely,

Katerina Galacatos
for Jane M. Hicks
Chief, Regulatory Division

Enclosures

PRELIMINARY JURISDICTIONAL DETERMINATION FORM
San Francisco District

This Preliminary Jurisdictional Determination finds that there *"may be"* waters of the United States in the subject review area and identifies all such aquatic features, based on the following information:

Regulatory Division: South Branch **File Number**: 28440-S **PJD Completion Date**: 04-27-2015

Review Area Location
City/County: Milpitas, Santa Clara County State: California
Nearest Named Waterbody: Lower Berryessa Cr, Lower Calera Cr
Approximate Center Coordinates of Review Area
Latitude (degree decimal format): 37.4383338°N
Longitude (degree decimal format): -121.90598°W
Approximate Total Acreage of Review Area: 33.19 Select

File Name: Berryessa Creek Levee Repairs, Milpitas

Applicant or Requestor Information
Name: Melanie Richardson
Company Name: Santa Clara Valley Water District
Street/P.O. Box: 5750 Almaden Expressway
City/State/Zip Code: 95118

Estimated Total Amount of Waters in Review Area

Non-Wetland Waters: 11,428 lineal feet feet wide and/or 4.116 acre(s) Flow Regime: Perennial

Wetlands: 10,486 lineal feet feet wide and/or 5.217 acre(s) Cowardin Class: Multiple Classes

Name of Section 10 Waters Occurring in Review Area
Tidal: L. Penitencia Cr, Berryessa Cr, Calera Cr
Non-Tidal: Berryessa Cr, Calera Cr, Tularcitos Cr

☐ Office (Desk) Determination
☒ Field Determination:
Date(s) of Site Visit(s): 09-14-2010

SUPPORTING DATA: Data reviewed for Preliminary JD (check all that apply – checked items should be included in case file and, where checked and requested, appropriately reference sources below)

☒ Maps. Plans, plots or plat submitted by or on behalf of applicant/requestor (specify): ESA, 2005, Calera Creek Maps 1-5, ESA, 2010, Lower Berryessa Creek Preliminary Delineation of Waters of the US Maps 1 - 12

☒ Data sheets submitted by or on behalf of applicant/requestor (specify): "Lower Berryessa Creek Delineation of Waters of the U.S. Revisions for Verification," 11OCT2010

- ☒ Corps concurs with data sheets/delineation report.
- ☐ Corps does not concur with data sheets/delineation report.

☐ Data sheets prepared by the Corps.
☐ Corps navigable waters' study (specify):
☐ U.S. Geological Survey Hydrologic Atlas:
- ☐ USGS NHD data.
- ☐ USGS HUC maps.

☐ U.S. Geological Survey map(s) (cite quad name/scale):
☐ USDA Natural Resources Conservation Service Soil Survey.
☐ National wetlands inventory map(s) (specify):
☐ State/Local wetland inventory map(s) (specify):
☐ FEMA/FIRM maps.
☐ 100-year Floodplain Elevation (specify, if known):
☐ Photographs: ☐ Aerial (specify name and date):
☐ Other (specify name and date):
☒ Previous JD determination(s) (specify File No. and date of response letter): File 28440S;Calera JD: 28JUL09; Tular JD: 28NOV05
☒ Other information (specify): Separate JDs for Calera and Tularcitos Cks were previously verified by USACE. Reg PM Holly Costa conducted field visit on 14 SEPT 2010 to evaluate current site conditions. Changes in conditions did not warrant revisions to previous JD for Calera Ck. For LB Ck, changes in site conditions were minor since previous JD. Changes wer noted during site visit and reflected in revised LB JD maps submitted by ESA in 2010.

IMPORTANT NOTE: If the information recorded on this form has not been verified by the Corps, the form should not be relied upon for later jurisdictional determinations.

Lisa Mazzione 6/4/15

Signature and Date of Regulatory Project Manager
(REQUIRED)

Melanie Richards 6-5-15

Signature and Date of Person Requesting Preliminary JD
(REQUIRED, unless obtaining the signature is impracticable)

EXPLANATION OF PRELIMINARY AND APPROVED JURISDICTIONAL DETERMINATIONS:

1. The Corps of Engineers believes that there may be jurisdictional waters of the United States on the subject site, and the permit applicant or other affected party who requested this preliminary JD is hereby advised of his or her option to request and obtain an approved jurisdictional determination (JD) for that site. Nevertheless, the permit applicant or other person who requested this preliminary JD has declined to exercise the option to obtain an approved JD in this instance and at this time.

2. In any circumstance where a permit applicant obtains an individual permit, or a Nationwide General Permit (NWP) or other general permit verification requiring "preconstruction notification" (PCN), or requests verification for a non-reporting NWP or other general permit, and the permit applicant has not requested an approved JD for the activity, the permit applicant is hereby made aware of the following: (1) the permit applicant has elected to seek a permit authorization based on a preliminary JD, which does not make an official determination of jurisdictional waters; (2) that the applicant has the option to request an approved JD before accepting the terms and conditions of the permit authorization, and that basing a permit authorization on an approved JD could possibly result in less compensatory mitigation being required or different special conditions; (3) that the applicant has the right to request an individual permit rather than accepting the terms and conditions of the NWP or other general permit authorization; (4) that the applicant can accept a permit authorization and thereby agree to comply with all the terms and conditions of that permit, including whatever mitigation requirements the Corps has determined to be necessary; (5) that undertaking any activity in reliance upon the subject permit authorization without requesting an approved JD constitutes the applicant's acceptance of the use of the preliminary JD, but that either form of JD will be processed as soon as is practicable; (6) accepting a permit authorization (e.g., signing a proffered individual permit) or undertaking any activity in reliance on any form of Corps permit authorization based on a preliminary JD constitutes agreement that all wetlands and other water bodies on the site affected in any way by that activity are jurisdictional waters of the United States, and precludes any challenge to such jurisdiction in any administrative or judicial compliance or enforcement action, or in any administrative appeal or in any Federal court; and (7) whether the applicant elects to use either an approved JD or a preliminary JD, that JD will be processed as soon as is practicable. Further, an approved JD, a proffered individual permit (and all terms and conditions contained therein), or individual permit denial can be administratively appealed pursuant to 33 C.F.R. Part 331, and that in any administrative appeal, jurisdictional issues can be raised (see 33 C.F.R. 331.5(a)(2)). If, during that administrative appeal, it becomes necessary to make an official determination whether CWA jurisdiction exists over a site, or to provide an official delineation of jurisdictional waters on the site, the Corps will provide an approved JD to accomplish that result, as soon as is practicable.

Aquatic Resource I.D.	Latitude (degree decimal format)	Longitude (degree decimal format)	Cowardin Class and Flow Regime	Estimated Area or Lineal Feet of Aquatic Resource	Type of Aquatic Resource
lpowt	37.4461°N	-121.9144°W	Select Flow: Perennial	lineal ft ft wide 0.029 acre(s)	Channelized Creek
lpbmt	37.4461°N	-121.9144°W	Select Flow: Perennial	lineal ft ft wide 0.028 acre(s)	Brackish Marsh
lbowt	37.4458°N	-121.9114°W	Select Flow: Perennial	lineal ft ft wide 0.987 acre(s)	Channelized Creek
lbownt	37.4375°N	-121.9003°W	Select Flow: Perennial	lineal ft ft wide 2.648 acre(s)	Channelized Creek
lbbmt	37.4458°N	-121.9114°W	Select Flow: Perennial	lineal ft ft wide 1.161 acre(s)	Brackish Marsh
lbfmnt	37.4375°N	-121.9003°W	Select Flow: Seasonal	lineal ft ft wide 3.462 acre(s)	Seasonal Wetland
tuownt	37.4363°N	-121.8950°W	Select Flow: Seasonal	lineal ft ft wide 0.018 acre(s)	Channelized Creek
lcowt	37.4461°N	-121.9111°W	Select Flow: Perennial	lineal ft ft wide 0.050 acre(s)	Concrete-lined Channel
lcbmt	37.4461°N	-121.9111°W	Select Flow: Perennial	lineal ft ft wide 0.016 acre(s)	Channelized Creek
lcownt	37.4475°N	-121.9056°W	Select Flow: Seasonal	lineal ft ft wide 0.434 acre(s)	Channelized Creek
lcfmnt	37.4475°N	-121.9056°W	Select Flow: Seasonal	lineal ft ft wide 0.550 acre(s)	Freshwater Marsh
	°Select	- °Select	Select Flow: Seasonal	lineal ft ft wide acre(s)	Select
	°Select	- °Select	Select Flow: Select	lineal ft ft wide acre(s)	Select
	°Select	- °Select	Select Flow: Select	lineal ft ft wide acre(s)	Select
	°Select	- °Select	Select Flow: Select	lineal ft ft wide acre(s)	Select
	°Select	- °Select	Select Flow: Select	lineal ft ft wide acre(s)	Select
	°Select	- °Select	Select Flow: Select	lineal ft ft wide acre(s)	Select
	°Select	- °Select	Select Flow: Select	lineal ft ft wide acre(s)	Select

PRELIMINARY JURISDICTIONAL DETERMINATION, SAN FRANCISCO DISTRICT
FILE NO. 28440-S
ADDENDUM SHEET

AQUATIC RESOURCE ID Acronyms and Locations

Acronym	Full Name	Maps with Occurrences
Lower Penitencia Creek		
lpowt	Lower Penitencia Creek open water tidal	Berryessa Creek 12
lpbmt	Lower Penitencia Creek brackish marsh tidal	Berryessa Creek 12
Lower Berryessa Creek		
lbowt	Lower Berryessa Creek open water tidal	Berryessa Creek 8, 9, 10, 11, 12
lbbmt	Lower Berryessa Creek brackish marsh tidal	Berryessa Creek 9, 10, 11, 12
lbownt	Lower Berryessa Creek open water non- tidal	Berryessa Creek 1, 2, 3, 4, 5, 6, 7, 8, 9
lbfmnt	Lower Berryessa Creek freshwater marsh non-tidal	Berryessa Creek 1, 2, 3, 4, 5, 6, 7
Lower Calera Creek		
lcowt	Lower Calera Creek open water tidal	Berryessa Creek 11
lcownt	Lower Calera Creek open water non-tidal	Lower Calera Creek 1, 2, 3, 4, 5
lcbmt	Lower Calera Creek brackish marsh tidal	Berryessa Creek 11
lcfm	Lower Calera creek freshwater marsh non-tidal	Lower Calera Creek 1, 2, 3, 4, 5
Tularcitos Creek		
townt	Tularcitos Creek open water non-tidal	Berryessa Creek 2

U.S. Army
Corps of Engineers
San Francisco District
Regulatory Division

Preliminary Jurisdictional Determination
SPN FILE Number 28440S
Lower Berryessa Creek and Lower Calera Creek
Flood Protection Improvements Project

Project area within Calera Creek is depicted as project boundary (Figs. 2-6).
Project area within lower Berryessa Creek is depicted as study area (Figs. 7-18).

Freshwater marsh wetlands, waters of the U.S., tidal and non-tidal open water, tidal brachkish marsh, and seasonal wetlands are jurisdicitonal waters of the U.S. pursuant to Section 404 of the Clean Water

Tidal brackish marsh and tidal open water are jurisdictional waters of the pursuant to Seciton 10 of the Rivers and Harbor Act of 1899.

Sheet 1 of 18 **Date: April 30, 2015**

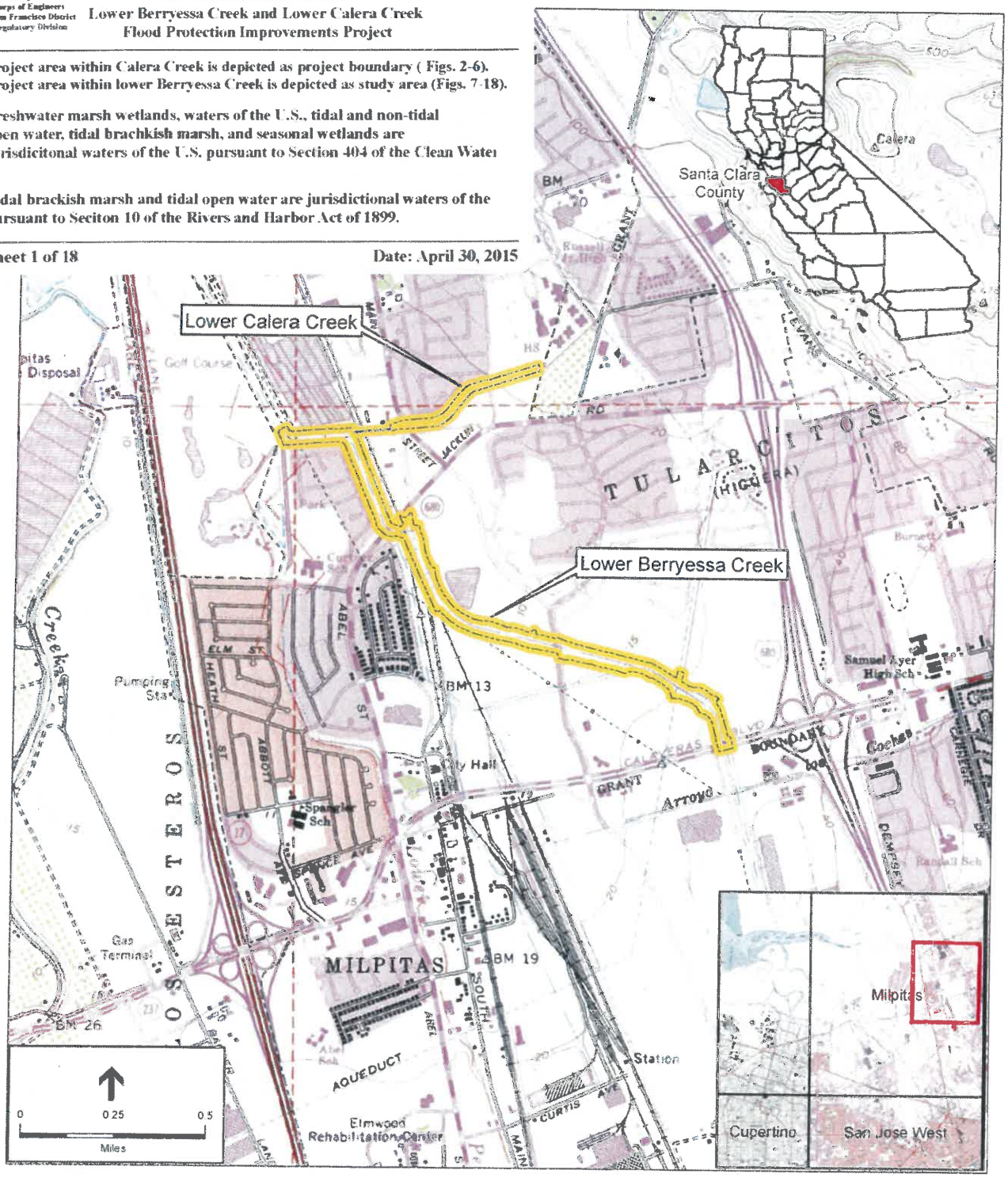

SOURCE: USGS Milpitas, Calif. 7.5-minute topographic quadrangle

Lower Berryessa and Lower Calera Creek Project. 201425

Figure 1
Project Location

U.S. Army
Corps of Engineers
San Francisco District
Regulatory Division

Preliminary Jurisdictional Determination
SPN FILE Number 28440S
Lower Berryessa Creek and Lower Calera Creek
Flood Protection Improvements Project

Project area within Calera Creek is depicted as project boundary (Figs. 2-6).
Project area within lower Berryessa Creek is depicted as study area (Figs. 7-18).

Freshwater marsh wetlands, waters of the U.S., tidal and non-tidal open water, tidal brachkish marsh, and seasonal wetlands are jurisdicitonal waters of the U.S. pursuant to Section 404 of the Clean Water

Tidal brackish marsh and tidal open water are jurisdictional waters of the pursuant to Seciton 10 of the Rivers and Harbor Act of 1899.

Sheet 2 of 18 Date: April 30, 2015

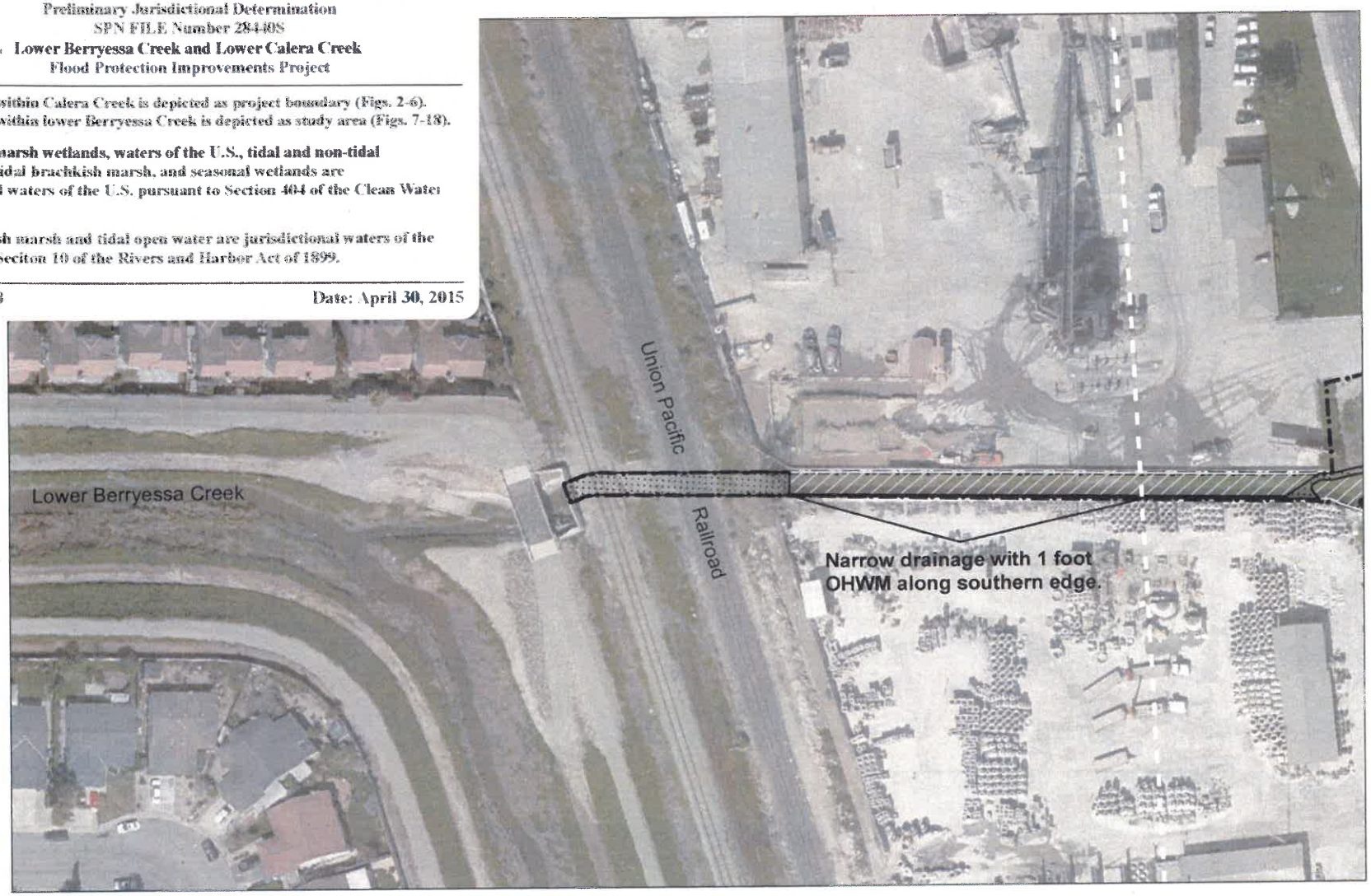

Lower Berryessa Creek Project / 201425

SOURCE: City of Milpitas, 2004; ESA, 2005.

Map 1
Calera Creek 1

0 100
Feet

Legend

- Datapoint
- Section 404 Freshwater Marsh Wetland (Acres:0.087)
- Section 404 Other Waters of the U.S. (Acres: 0.062, Length: 393 linear ft)
- Project Boundary

U.S. Army
Corps of Engineers
San Francisco District
Regulatory Division

Preliminary Jurisdictional Determination
SPN FILE Number 28440S
Lower Berryessa Creek and Lower Calera Creek
Flood Protection Improvements Project

Project area within Calera Creek is depicted as project boundary (Figs. 2-6). Project area within lower Berryessa Creek is depicted as study area (Figs. 7-18).

Freshwater marsh wetlands, waters of the U.S., tidal and non-tidal open water, tidal brachkish marsh, and seasonal wetlands are jurisdicitonal waters of the U.S. pursuant to Section 404 of the Clean Water

Tidal brackish marsh and tidal open water are jurisdictional waters of the pursuant to Seciton 10 of the Rivers and Harbor Act of 1899.

Sheet 3 of 18

Date: April 30, 2015

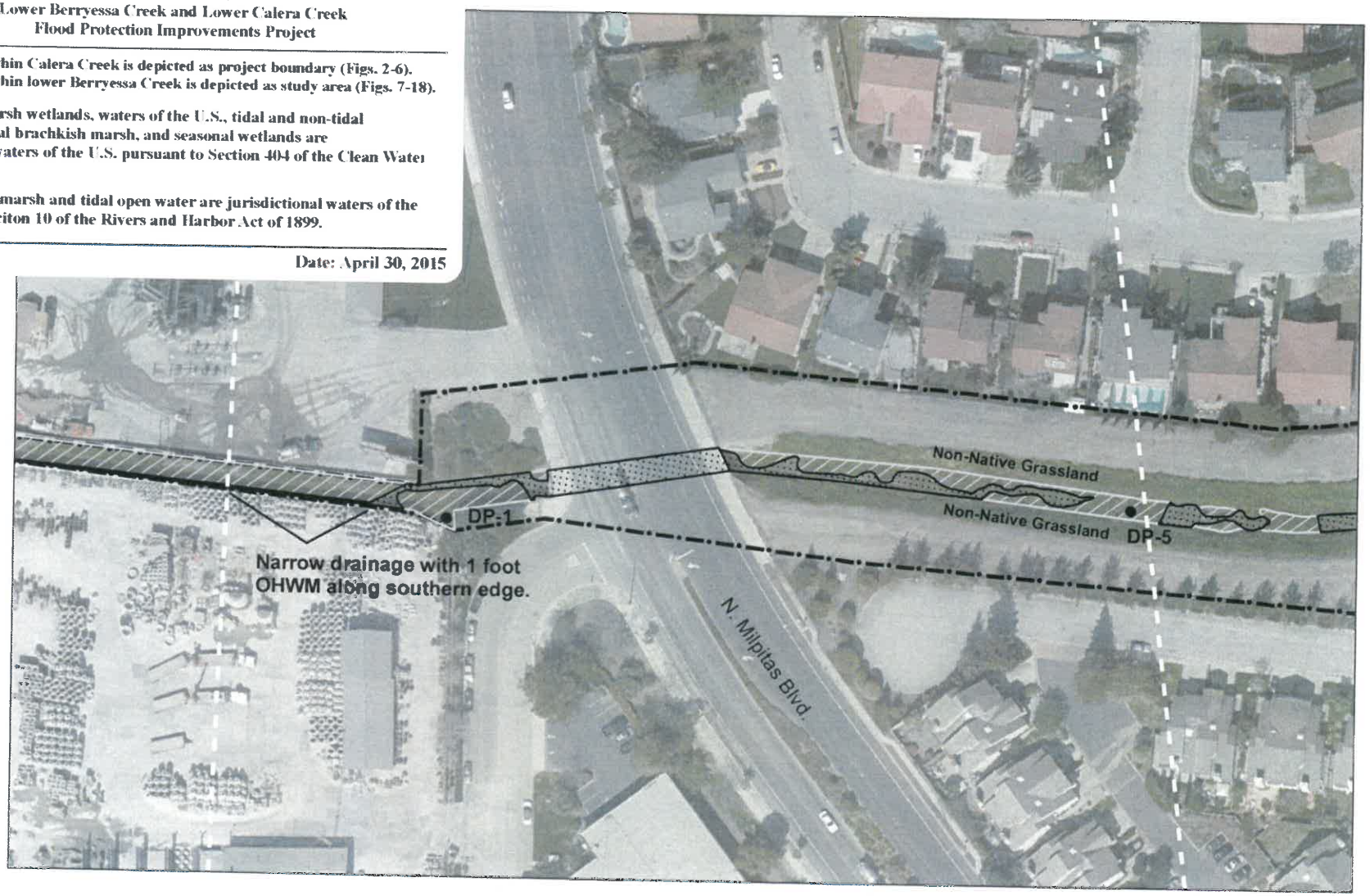

SOURCE: City of Milpitas, 2004; ESA, 2005

Lower Berryessa Creek Project / 201425

Legend

- Datapoint
- Section 404 Freshwater Marsh Wetland (Acres: 0.141)
- Section 404 Other Waters of the U.S. (Acres: 0.110, Length: 600 linear ft)
- Project Boundary

0 100
Feet

Map 2
Calera Creek 2

U.S. Army
Corps of Engineers
San Francisco District
Regulatory Division

Preliminary Jurisdictional Determination
SPN FILE Number 284408
Lower Berryessa Creek and Lower Calera Creek
Flood Protection Improvements Project

Project area within Calera Creek is depicted as project boundary (Figs. 2-6).
Project area within lower Berryessa Creek is depicted as study area (Figs. 7-18).

Freshwater marsh wetlands, waters of the U.S., tidal and non-tidal open water, tidal brackish marsh, and seasonal wetlands are jurisdicitonal waters of the U.S. pursuant to Section 404 of the Clean Water

Tidal brackish marsh and tidal open water are jurisdictional waters of the pursuant to Seciton 10 of the Rivers and Harbor Act of 1899.

Sheet 4 of 18 **Date: April 30, 2013**

Lower Berryessa Creek Project / 201425

Map 3
Calera Creek 3

SOURCE: City of Milpitas, 2004; ESA, 2005.

0 100
Feet

Legend

- Datapoint
- Section 404 Freshwater Marsh Wetland (Acres: 0.090)
- Section 404 Other Waters of the U.S. (Acres: 0.113, Length: 604 linear ft)
- Project Boundary

U.S. Army
Corps of Engineers
San Francisco District
Regulatory Division

Preliminary Jurisdictional Determination
SPN FILE Number 284408
Lower Berryessa Creek and Lower Calera Creek
Flood Protection Improvements Project

Project area within Calera Creek is depicted as project boundary (Figs. 2-6).
Project area within lower Berryessa Creek is depicted as study area (Figs. 7-18).

Freshwater marsh wetlands, waters of the U.S., tidal and non-tidal open water, tidal brachkish marsh, and seasonal wetlands are jurisdicitonal waters of the U.S. pursuant to Section 404 of the Clean Water

Tidal brackish marsh and tidal open water are jurisdictional waters of the pursuant to Seciton 10 of the Rivers and Harbor Act of 1899.

Sheet 5 of 18

Date: April 30, 2015

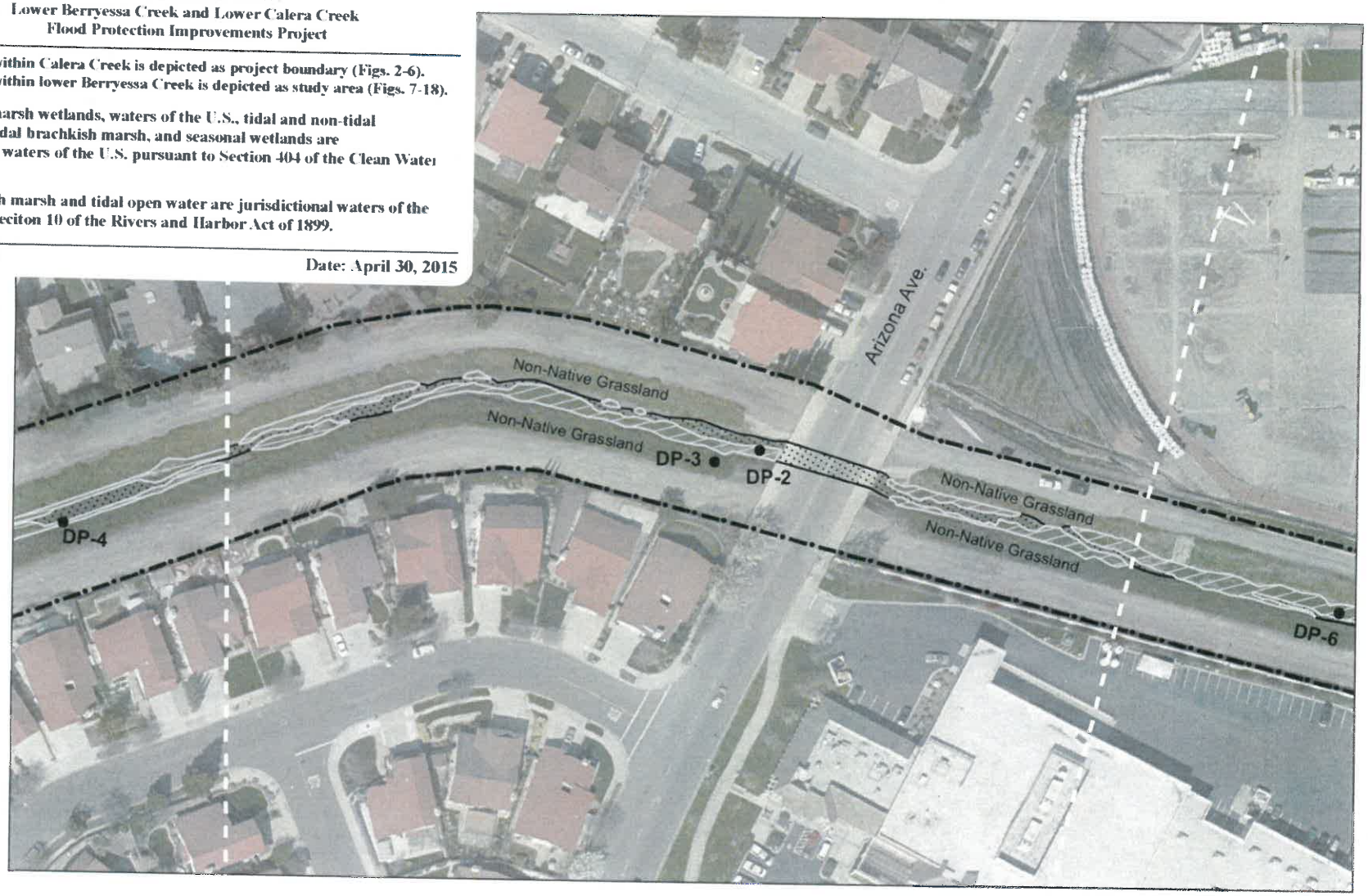

SOURCE: City of Milpitas, 2004; ESA, 2005

Legend

- Datapoint
- Section 404 Freshwater Marsh Wetland (Acres: 0.114)
- Section 404 Other Waters of the U.S. (Acres: 0.095, Length: 652 linear ft)
- Project Boundary

0 100
Feet

Lower Berryessa Creek Project / 201425

Map 4
Calera Creek 4

U.S. Army
Corps of Engineers
San Francisco District
Regulatory Division

Preliminary Jurisdictional Determination
SPN FILE Number 28440S
Lower Berryessa Creek and Lower Calera Creek
Flood Protection Improvements Project

Project area within Calera Creek is depicted as project boundary (Figs. 2-6).
Project area within lower Berryessa Creek is depicted as study area (Figs. 7-18).

Freshwater marsh wetlands, waters of the U.S., tidal and non-tidal open water, tidal brackish marsh, and seasonal wetlands are jurisdicitonal waters of the U.S. pursuant to Section 404 of the Clean Water

Tidal brackish marsh and tidal open water are jurisdictional waters of the pursuant to Section 10 of the Rivers and Harbor Act of 1899.

Sheet 6 of 18

Date: April 30, 2015

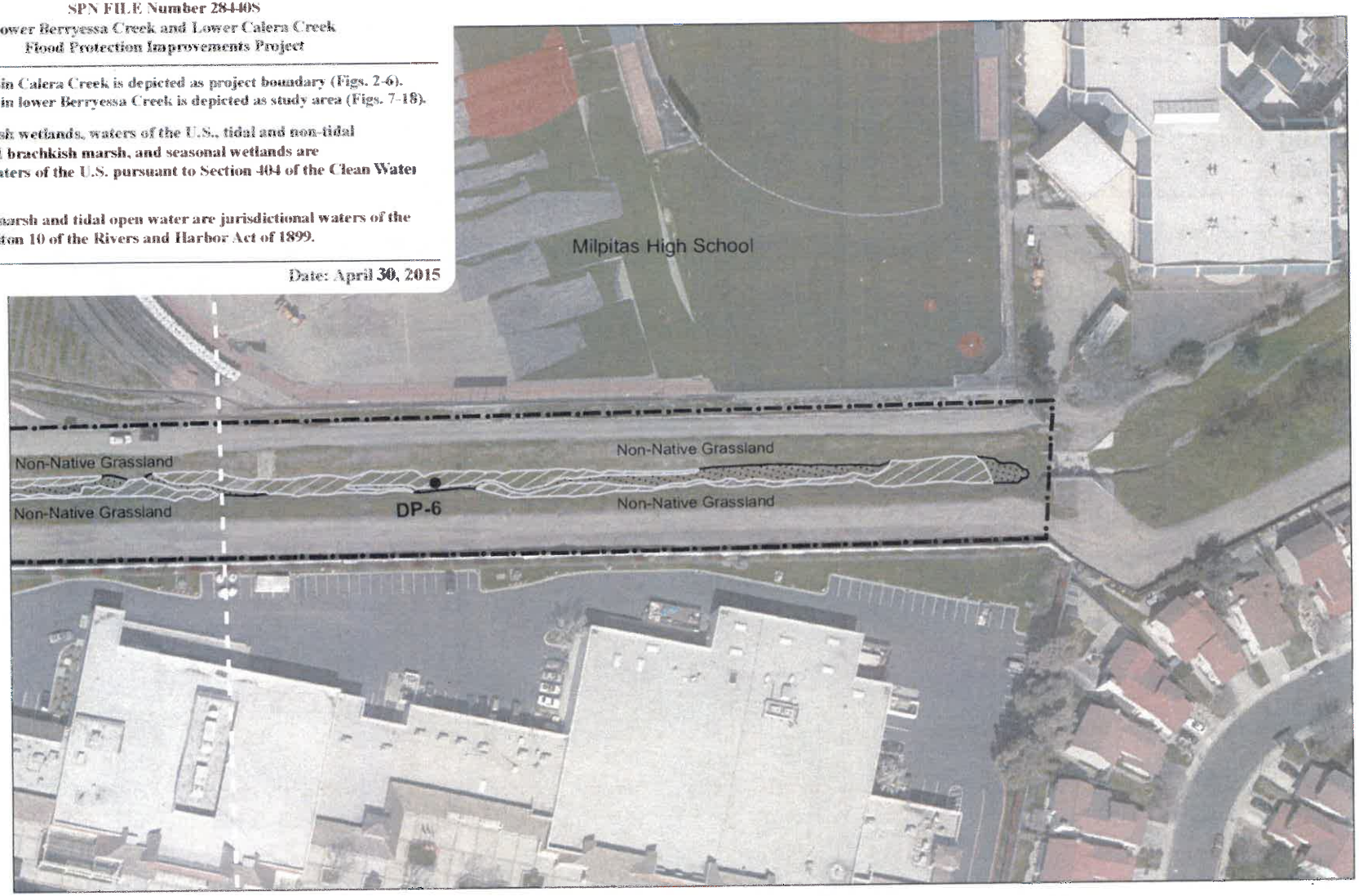

Lower Berryessa Creek Project / 201425

Map 5
Calera Creek 5

SOURCE: City of Milpitas, 2004; ESA, 2005

0 100
Feet

Legend

- Datapoint
- Section 404 Freshwater Marsh Wetland (Acres: 0.117)
- Section 404 Other Waters of the U.S. (Acres: 0.059, Length: 434 linear ft)
- Project Boundary

U.S. Army
Corps of Engineers
San Francisco District
Regulatory Division

Preliminary Jurisdictional Determination
SPN FILE Number 284408
Lower Berryessa Creek and Lower Calera Creek
Flood Protection Improvements Project

Project area within Calera Creek is depicted as project boundary (Figs. 2-6).
Project area within lower Berryessa Creek is depicted as study area (Figs. 7-18).

Freshwater marsh wetlands, waters of the U.S., tidal and non-tidal open water, tidal brachkish marsh, and seasonal wetlands are jurisdicitonal waters of the U.S. pursuant to Section 404 of the Clean Water

Tidal brackish marsh and tidal open water are jurisdictional waters of the pursuant to Seciton 10 of the Rivers and Harbor Act of 1899.

Sheet 7 of 18

Date: April 30, 2015

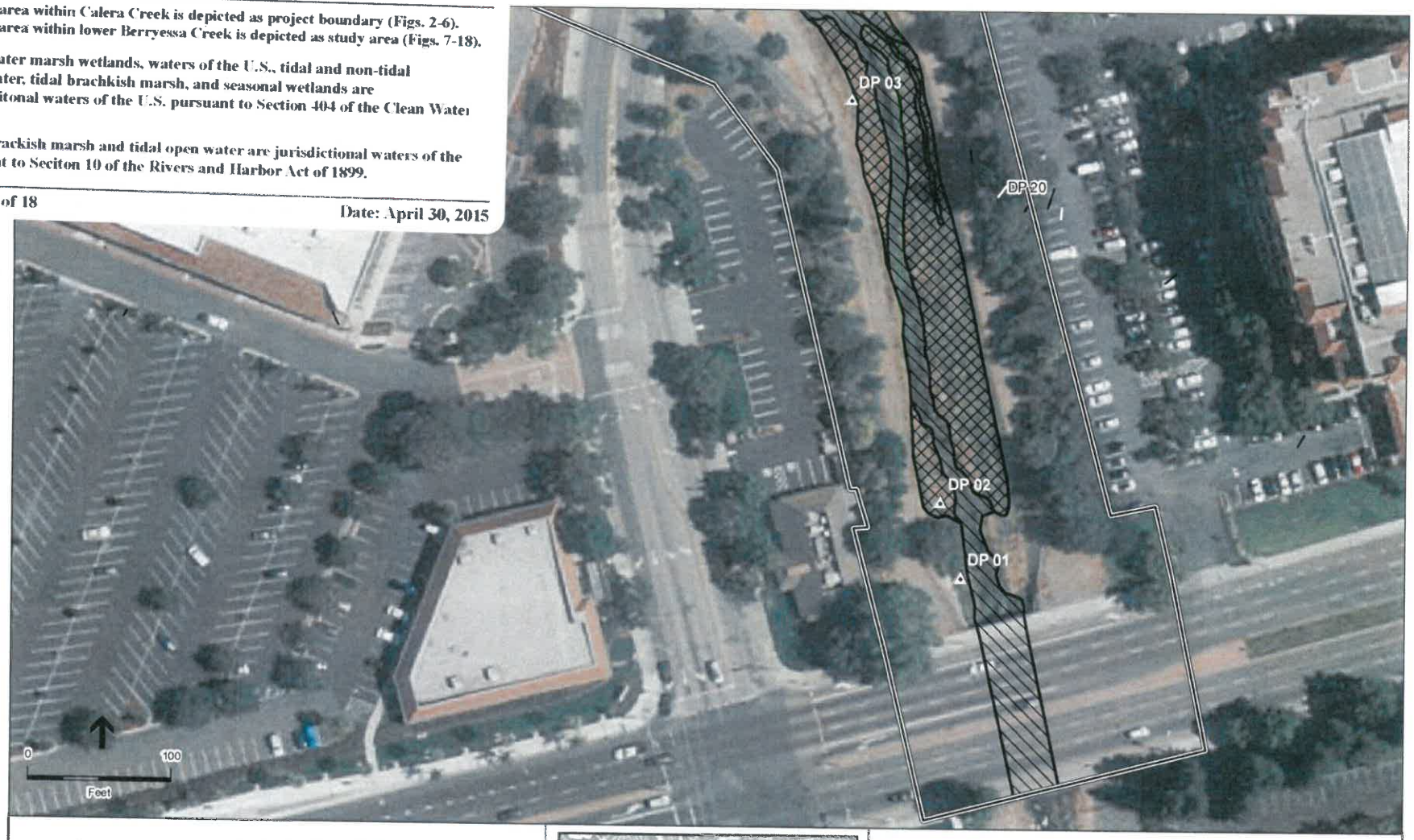

Data Points
Study Area

Jurisdictional Waters
Open Water - Non-Tidal
Open Water - Tidal
Brackish Marsh - Tidal
Seasonal Wetland

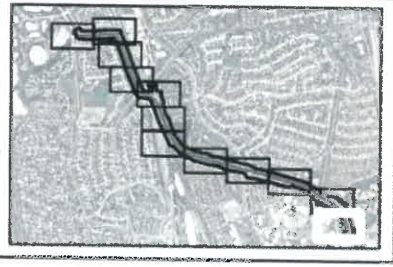

Appendix A
Lower Berryessa Creek
Preliminary Delineation of Waters of the U.S.: Map 1 of 12
For contiguous features see adjacent maps for feature information
Map scale: 1:1200
Source: ESA, 2010; SCVWD, 2010, GlobeXplorer, 2009

U.S. Army
Corps of Engineers
San Francisco District
Regulatory Division

Preliminary Jurisdictional Determination
SPN FILE Number 284408
Lower Berryessa Creek and Lower Calera Creek
Flood Protection Improvements Project

Project area within Calera Creek is depicted as project boundary (Figs. 2-6).
Project area within lower Berryessa Creek is depicted as study area (Figs. 7-18).

Freshwater marsh wetlands, waters of the U.S., tidal and non-tidal open water, tidal brackkish marsh, and seasonal wetlands are jurisdicitonal waters of the U.S. pursuant to Section 404 of the Clean Water

Tidal brackish marsh and tidal open water are jurisdictional waters of the pursuant to Seciton 10 of the Rivers and Harbor Act of 1899.

Sheet 8 of 18 **Date: April 30, 2015**

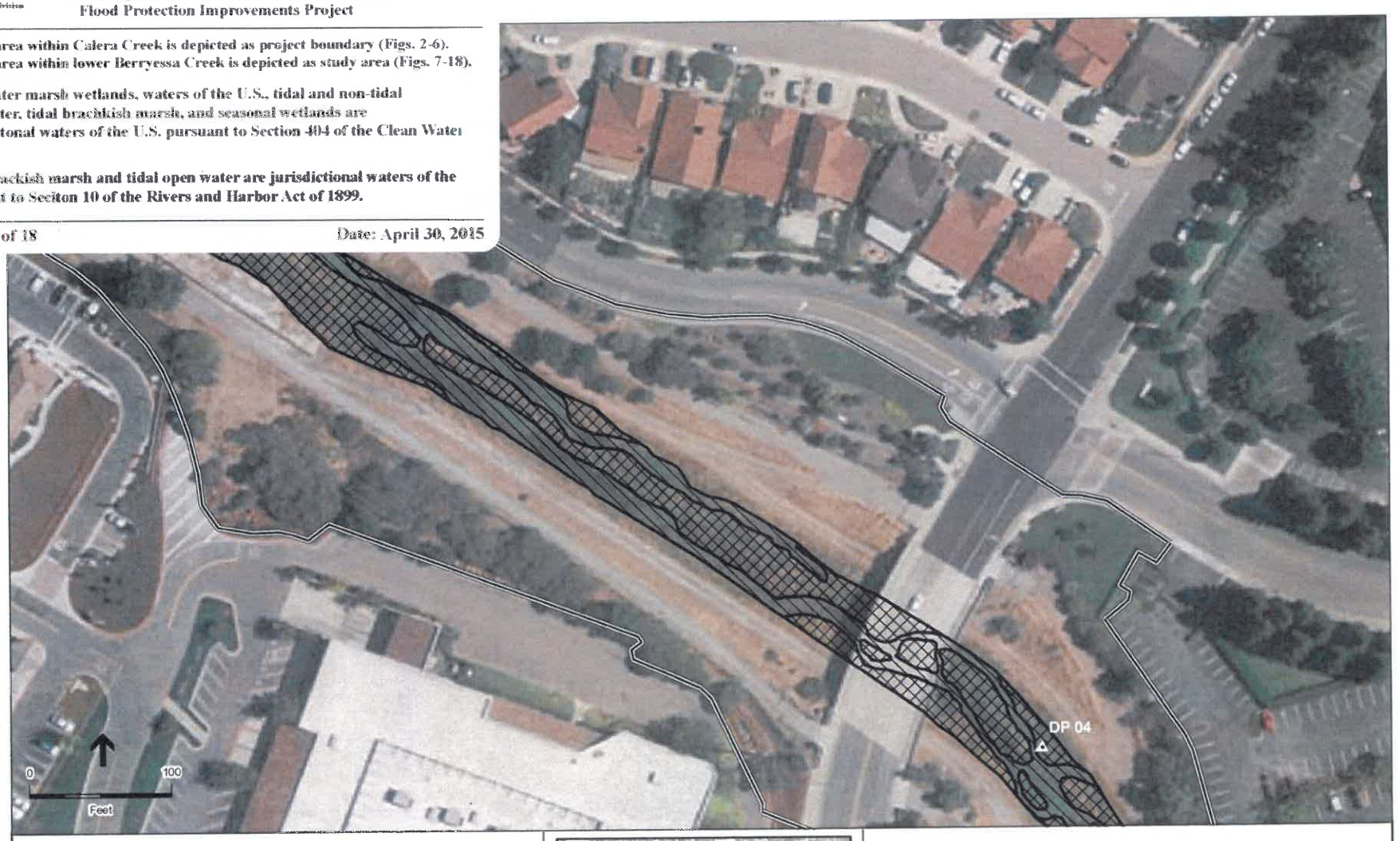

Data Points
Study Area

Jurisdictional Waters
Open Water - Non-Tidal
Open Water - Tidal
Brackish Marsh - Tidal
Seasonal Wetland

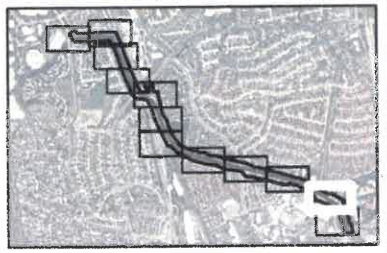

Appendix A
Lower Berryessa Creek
Preliminary Delineation of Waters of the U.S.: Map 2 of 12
For contiguous features see adjacent maps for feature information
Map scale: 1:1200
Source: ESA, 2010; SCVWD, 2010, GlobeXplorer, 2009

U.S. Army
Corps of Engineers
San Francisco District
Regulatory Division

Preliminary Jurisdictional Determination
SPN FILE Number 284408
Lower Berryessa Creek and Lower Calera Creek
Flood Protection Improvements Project

Project area within Calera Creek is depicted as project boundary (Figs. 2-6). Project area within lower Berryessa Creek is depicted as study area (Figs. 7-18).

Freshwater marsh wetlands, waters of the U.S., tidal and non-tidal open water, tidal brachkish marsh, and seasonal wetlands are jurisdicitonal waters of the U.S. pursuant to Section 404 of the Clean Water

Tidal brackish marsh and tidal open water are jurisdictional waters of the pursuant to Seciton 10 of the Rivers and Harbor Act of 1899.

Sheet 9 of 18 **Date: April 30, 2015**

Data Points
Study Area

Jurisdictional Waters
Open Water - Non-Tidal
Open Water - Tidal
Brackish Marsh - Tidal
Seasonal Wetland

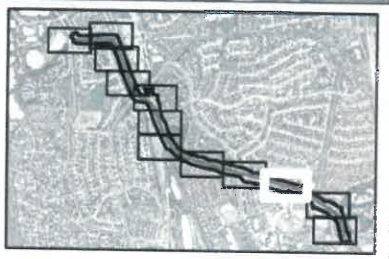

Appendix A
Lower Berryessa Creek
Preliminary Delineation of Waters of the U.S.: Map 3 of 12
For contiguous features see adjacent maps for feature information
Map scale: 1:1200
Source: ESA, 2010, SCVWD, 2010, GlobeXplorer, 2009

U.S. Army
Corps of Engineers
San Francisco District
Regulatory Division

Preliminary Jurisdictional Determination
SPN FILE Number 28440S
Lower Berryessa Creek and Lower Calera Creek
Flood Protection Improvements Project

Project area within Calera Creek is depicted as project boundary (Figs. 2-6).
Project area within lower Berryessa Creek is depicted as study area (Figs. 7-18).

Freshwater marsh wetlands, waters of the U.S., tidal and non-tidal open water, tidal brackish marsh, and seasonal wetlands are jurisdicitonal waters of the U.S. pursuant to Section 404 of the Clean Water

Tidal brackish marsh and tidal open water are jurisdictional waters of the pursuant to Seciton 10 of the Rivers and Harbor Act of 1899.

Sheet 10 of 18 **Date: April 30, 2015**

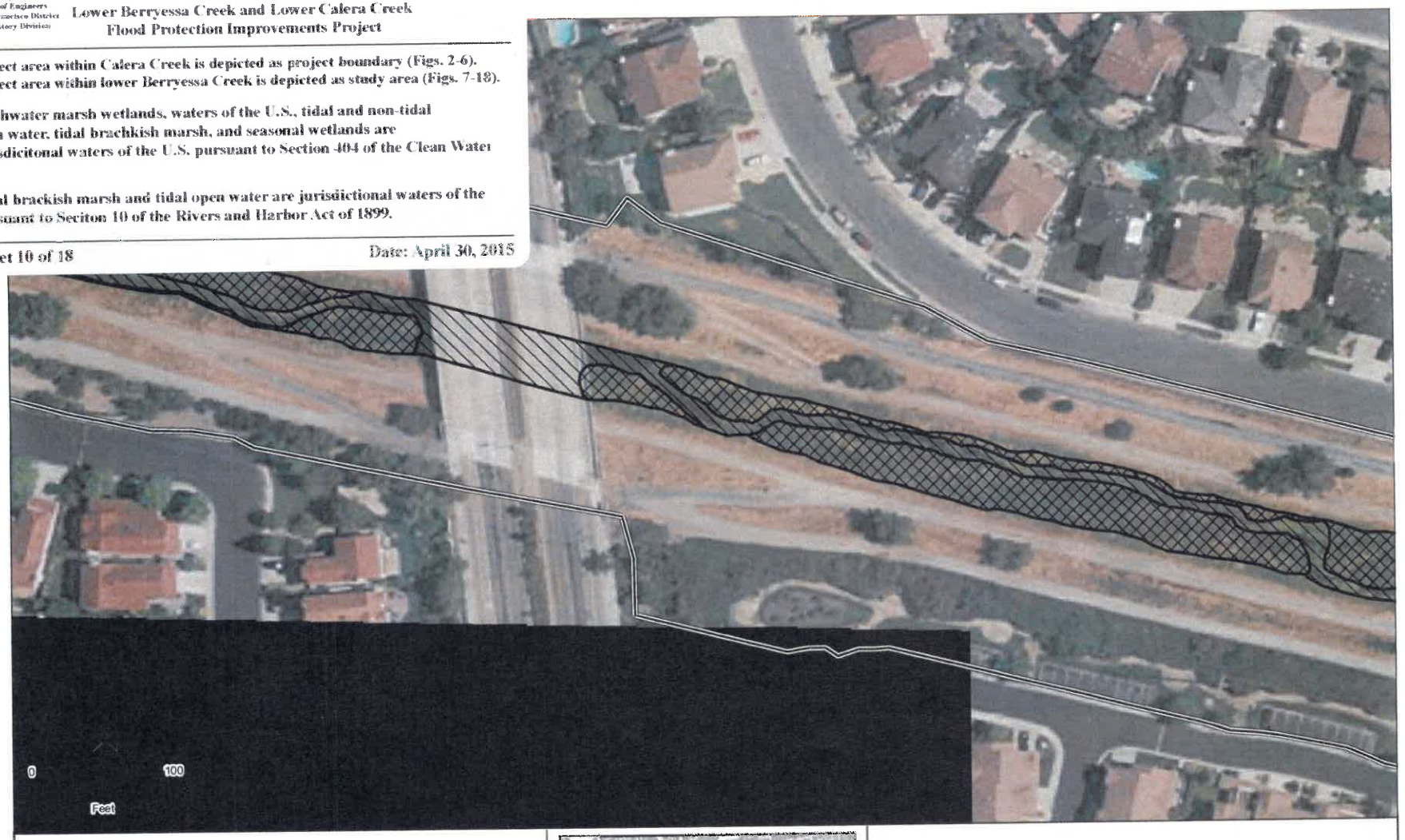

Data Points
Study Area

Jurisdictional Waters
Open Water - Non-Tidal
Open Water - Tidal
Brackish Marsh - Tidal
Seasonal Wetland

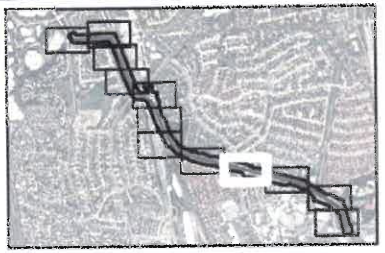

Appendix A
Lower Berryessa Creek
Preliminary Delineation of Waters of the U.S.: Map 4 of 12
For contiguous features see adjacent maps for feature information
Map scale: 1:1200
Source: ESA, 2010; SCVWD, 2010; GlobeXplorer, 2009

U.S. Army
Corps of Engineers
San Francisco District
Regulatory Division

Preliminary Jurisdictional Determination
SPN FILE Number 28440S
Lower Berryessa Creek and Lower Calera Creek
Flood Protection Improvements Project

Project area within Calera Creek is depicted as project boundary (Figs. 2-6).
Project area within lower Berryessa Creek is depicted as study area (Figs. 7-18).

Freshwater marsh wetlands, waters of the U.S., tidal and non-tidal open water, tidal brachkish marsh, and seasonal wetlands are jurisdicitonal waters of the U.S. pursuant to Section 404 of the Clean Water

Tidal brackish marsh and tidal open water are jurisdictional waters of the pursuant to Seciton 10 of the Rivers and Harbor Act of 1899.

Sheet 11 of 18 **Date: April 30, 2015**

Data Points
Study Area

Jurisdictional Waters
Open Water - Non-Tidal
Open Water - Tidal
Brackish Marsh - Tidal
Seasonal Wetland

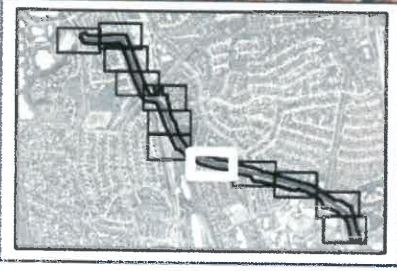

Appendix A
Lower Berryessa Creek
Preliminary Delineation of Waters of the U.S.: Map 5 of 12
For contiguous features see adjacent maps for feature information
Map scale: 1:1200
Source: ESA, 2010; SCVWD, 2010, GlobeXplorer, 2009

U.S. Army
Corps of Engineers
San Francisco District
Regulatory Division

Preliminary Jurisdictional Determination
SPN FILE Number 284408
Lower Berryessa Creek and Lower Calera Creek
Flood Protection Improvements Project

Project area within Calera Creek is depicted as project boundary (Figs. 2-6).
Project area within lower Berryessa Creek is depicted as study area (Figs. 7-18).

Freshwater marsh wetlands, waters of the U.S., tidal and non-tidal open water, tidal brackish marsh, and seasonal wetlands are jurisdicitonal waters of the U.S. pursuant to Section 404 of the Clean Water

Tidal brackish marsh and tidal open water are jurisdictional waters of the pursuant to Section 10 of the Rivers and Harbor Act of 1899.

Sheet 12 of 18 **Date: April 30, 2015**

Data Points
Study Area

Jurisdictional Waters
Open Water - Non-Tidal
Open Water - Tidal
Brackish Marsh - Tidal
Seasonal Wetland

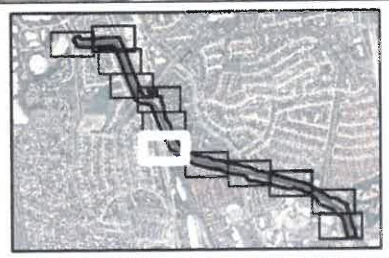

Appendix A
Lower Berryessa Creek
Preliminary Delineation of Waters of the U.S.: Map 6 of 12
For contiguous features see adjacent maps for feature information
Map scale: 1:1200
Source: ESA, 2010; SCVWD, 2010, GlobeXplorer, 2009

U.S. Army
Corps of Engineers
San Francisco District
Regulatory Division

Preliminary Jurisdictional Determination
SPN FILE Number 284408
Lower Berryessa Creek and Lower Calera Creek
Flood Protection Improvements Project

Project area within Calera Creek is depicted as project boundary (Figs. 2-6).
Project area within lower Berryessa Creek is depicted as study area (Figs. 7-18).

Freshwater marsh wetlands, waters of the U.S., tidal and non-tidal open water, tidal brachkish marsh, and seasonal wetlands are jurisdicitonal waters of the U.S. pursuant to Section 404 of the Clean Water

Tidal brackish marsh and tidal open water are jurisdictional waters of the pursuant to Seciton 10 of the Rivers and Harbor Act of 1899.

Sheet 13 of 18

Date: April 30, 2015

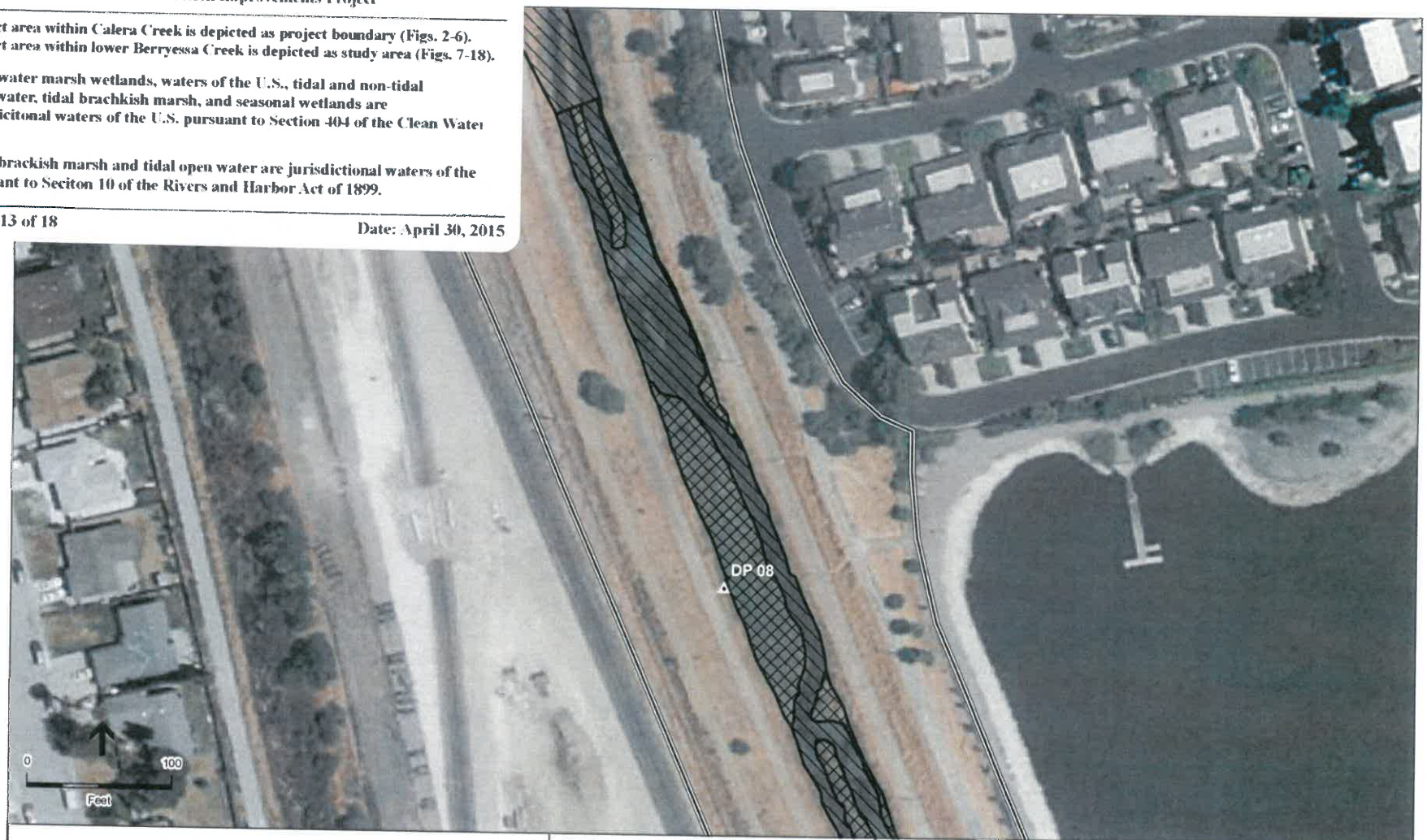

Data Points
Study Area

Jurisdictional Waters
Open Water - Non-Tidal
Open Water - Tidal
Brackish Marsh - Tidal
Seasonal Wetland

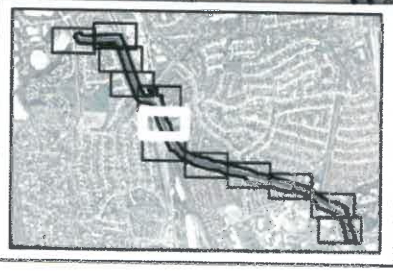

Appendix A
Lower Berryessa Creek
Preliminary Delineation of Waters of the U.S.: Map 7 of 12
For contiguous features see adjacent maps for feature information
Map scale: 1:1200
Source: ESA, 2010; SCVWD, 2010; GlobeXplorer, 2009

U.S. Army
Corps of Engineers
San Francisco District
Regulatory Division

Preliminary Jurisdictional Determination
SPN FILE Number 284408
Lower Berryessa Creek and Lower Calera Creek
Flood Protection Improvements Project

Project area within Calera Creek is depicted as project boundary (Figs. 2-6).
Project area within lower Berryessa Creek is depicted as study area (Figs. 7-18).

Freshwater marsh wetlands, waters of the U.S., tidal and non-tidal open water, tidal brachkish marsh, and seasonal wetlands are jurisdicitonal waters of the U.S. pursuant to Section 404 of the Clean Water

Tidal brackish marsh and tidal open water are jurisdictional waters of the pursuant to Seciton 10 of the Rivers and Harbor Act of 1899.

Sheet 14 of 18 **Date: April 30, 2015**

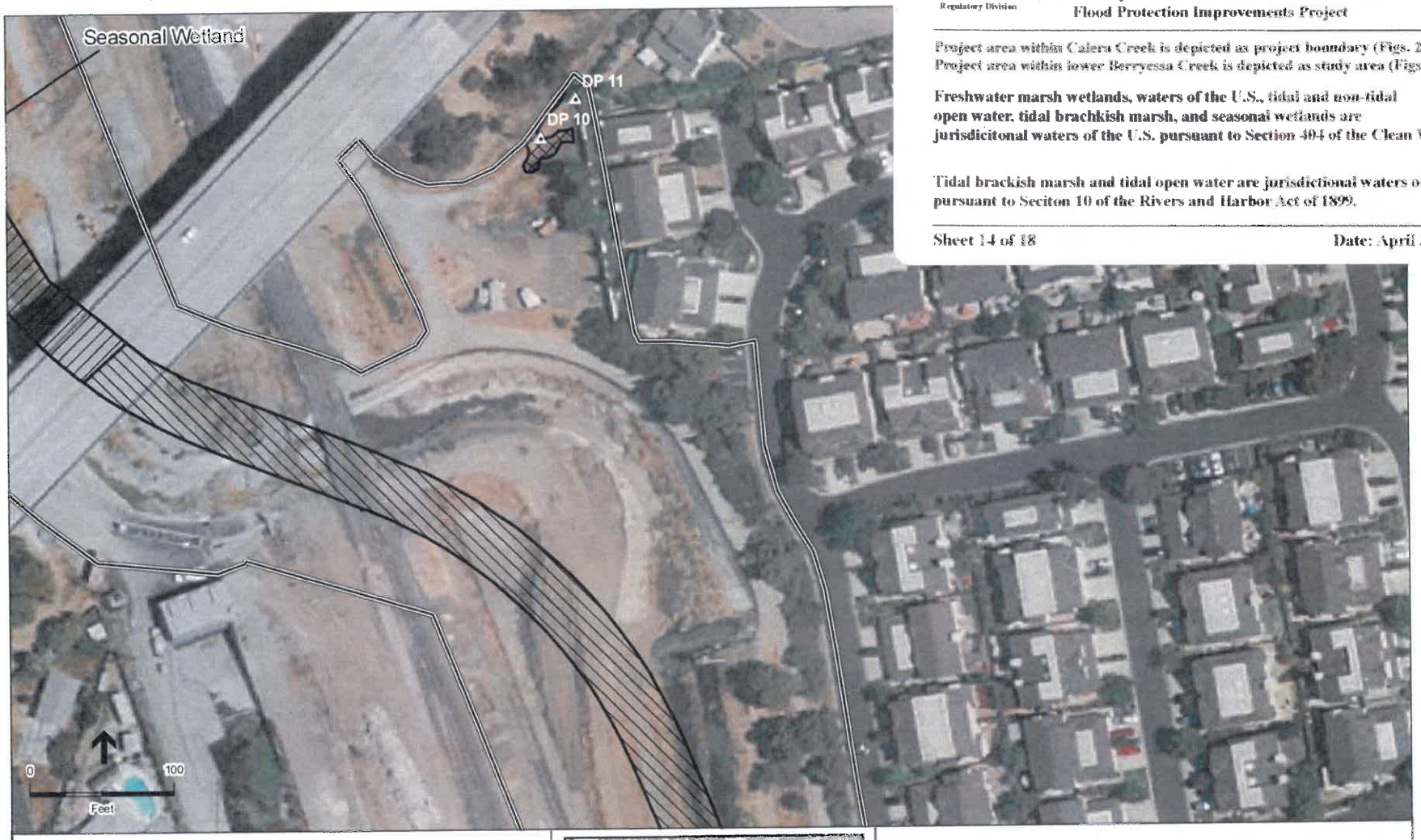

Data Points
Study Area

Jurisdictional Waters
Open Water - Non-Tidal
Open Water - Tidal
Brackish Marsh - Tidal
Seasonal Wetland

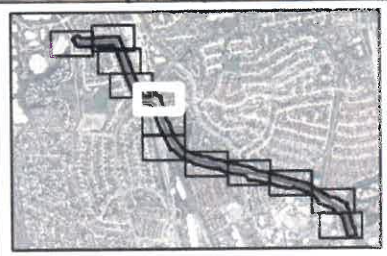

Appendix A
Lower Berryessa Creek
Preliminary Delineation of Waters of the U.S.: Map 8 of 12
For contiguous features see adjacent maps for feature information
Map scale: 1:1200
Source: ESA, 2010; SCVWD, 2010, GlobeXplorer, 2009

U.S. Army
Corps of Engineers
San Francisco District
Regulatory Division

Preliminary Jurisdictional Determination
SPN FILE Number 28440S
Lower Berryessa Creek and Lower Calera Creek
Flood Protection Improvements Project

Project area within Calera Creek is depicted as project boundary (Figs. 2-6).
Project area within lower Berryessa Creek is depicted as study area (Figs. 7-18).

Freshwater marsh wetlands, waters of the U.S., tidal and non-tidal open water, tidal brachkish marsh, and seasonal wetlands are jurisdicitonal waters of the U.S. pursuant to Section 404 of the Clean Water

Tidal brackish marsh and tidal open water are jurisdictional waters of the pursuant to Seciton 10 of the Rivers and Harbor Act of 1899.

Sheet 15 of 18 **Date: April 30, 2015**

Data Points
Study Area

Jurisdictional Waters
Open Water - Non-Tidal
Open Water - Tidal
Brackish Marsh - Tidal
Seasonal Wetland

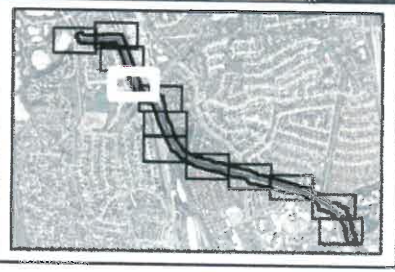

Appendix A
Lower Berryessa Creek
Preliminary Delineation of Waters of the U.S.: Map 9 of 12
For contiguous features see adjacent maps for feature information
Map scale: 1:1200
Source: ESA, 2010, SCVWD, 2010, GlobeXplorer, 2009

U.S. Army
Corps of Engineers
San Francisco District
Regulatory Division

Preliminary Jurisdictional Determination
SPN FILE Number 284408
Lower Berryessa Creek and Lower Calera Creek
Flood Protection Improvements Project

Project area within Calera Creek is depicted as project boundary (Figs. 2-6).
Project area within lower Berryessa Creek is depicted as study area (Figs. 7-18).

Freshwater marsh wetlands, waters of the U.S., tidal and non-tidal open water, tidal brachkish marsh, and seasonal wetlands are jurisdicitonal waters of the U.S. pursuant to Section 404 of the Clean Water

Tidal brackish marsh and tidal open water are jurisdictional waters of the pursuant to Seciton 10 of the Rivers and Harbor Act of 1899.

Sheet 16 of 18

Date: April 30, 2015

Data Points
Study Area

Jurisdictional Waters
Open Water - Non-Tidal
Open Water - Tidal
Brackish Marsh - Tidal
Seasonal Wetland

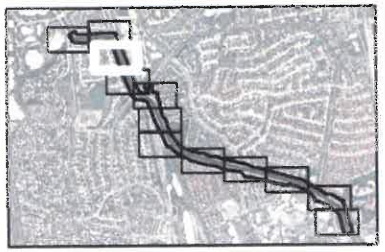

Appendix A
Lower Berryessa Creek
Preliminary Delineation of Waters of the U.S.: Map 10 of 12
For contiguous features see adjacent maps for feature information
Map scale: 1:1200
Source: ESA, 2010; SCVWD, 2010, GlobeXplorer, 2009

U.S. Army
Corps of Engineers
San Francisco District
Regulatory Division

Preliminary Jurisdictional Determination
SPN FILE Number 284408
Lower Berryessa Creek and Lower Calera Creek
Flood Protection Improvements Project

Project area within Calera Creek is depicted as project boundary (Figs. 2-6).
Project area within lower Berryessa Creek is depicted as study area (Figs. 7-18).

Freshwater marsh wetlands, waters of the U.S., tidal and non-tidal open water, tidal brachkish marsh, and seasonal wetlands are jurisdicitonal waters of the U.S. pursuant to Section 404 of the Clean Water

Tidal brackish marsh and tidal open water are jurisdictional waters of the pursuant to Seciton 10 of the Rivers and Harbor Act of 1899.

Sheet 17 of 18 **Date: April 30, 2015**

Data Points
Study Area

Jurisdictional Waters
Open Water - Non-Tidal
Open Water - Tidal
Brackish Marsh - Tidal
Seasonal Wetland

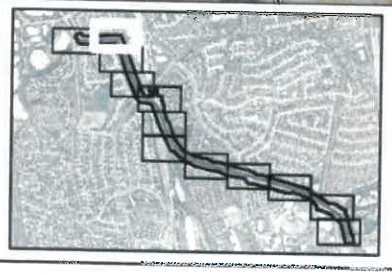

Appendix A
Lower Berryessa Creek
Preliminary Delineation of Waters of the U.S.: Map 11 of 12
For contiguous features see adjacent maps for feature information
Map scale: 1:1200
Source: ESA, 2010; SCVWD, 2010; GlobeXplorer, 2009

U.S. Army
Corps of Engineers
San Francisco District
Regulatory Division

Preliminary Jurisdictional Determination
SPN FILE Number 28440S
Lower Berryessa Creek and Lower Calera Creek
Flood Protection Improvements Project

Project area within Calera Creek is depicted as project boundary (Figs. 2-6).
Project area within lower Berryessa Creek is depicted as study area (Figs. 7-18).

Freshwater marsh wetlands, waters of the U.S., tidal and non-tidal open water, tidal brackish marsh, and seasonal wetlands are jurisdictional waters of the U.S. pursuant to Section 404 of the Clean Water

Tidal brackish marsh and tidal open water are jurisdictional waters of the pursuant to Seciton 10 of the Rivers and Harbor Act of 1899.

Sheet 18 of 18 **Date: April 30, 2015**

Data Points
Study Area

Jurisdictional Waters
Open Water - Non-Tidal
Open Water - Tidal
Brackish Marsh - Tidal
Seasonal Wetland

Appendix A
Lower Berryessa Creek
Preliminary Delineation of Waters of the U.S.: Map 12 of 12
For contiguous features see adjacent maps for feature information
Map scale: 1:1200
Source: ESA, 2010; SCVWD, 2010; GlobeXplorer, 2009

DEPARTMENT OF THE ARMY
SAN FRANCISCO DISTRICT, U.S. ARMY CORPS OF ENGINEERS
1455 MARKET STREET, 16TH FLOOOR
SAN FRANCISCO, CALIFORNIA 94103-1398

Regulatory Division

SUBJECT: File Number #2003-284400S

TIME EXTENSION

Ms. Melanie Richardson, Deputy Operating Officer
Watersheds Capital Division
Santa Clara Valley Water District
5750 Almaden Expressway
San Jose, CA 95118-3614

Dear Ms. Richardson:

This letter is written in response to your request dated February 5, 2018 for a time extension for Permit Number 2003-284400S, issued by this office on June 5, 2015, authorizing you to construct flood control improvements along 8,593 linear feet of Lower Berryessa Creek and to construct improvements along approximately 3,127 linear feet of Lower Calera Creek within the City of Milpitas, Santa Clara County, California.

You are hereby granted Department of the Army authorization to extend the completion date specified in General Condition No. 1 of Department of the Army Permit Number 2003-284400S to December 31, 2020. If the authorized work is not completed on or before December 31, 2020, this authorization, if not previously revoked or specifically extended, shall automatically expire. Except for General Condition No. 1, all conditions of the original permit remain in full force and effect.

Should you have any questions regarding this matter, please contact Kevin Schwartz of our Regulatory Division by email at Kevin.D.Schwartz@usace.army.mil or by phone at (415) 503-6769. Please address all correspondence to the Regulatory Division and refer to the File Number at the head of this letter. If you would like to provide comments on our permit review process, please complete the Customer Survey Form available online at http://www.spn.usace.army.mil/Missions/Regulatory.aspx.

Sincerely,

for
Rick M. Bottoms, Ph.D.
Chief, Regulatory Division

Copies Furnished:

US EPA, San Francisco, CA
US FWS, Sacramento, CA
US NMFS, Santa Rosa, CA
CA DFW, Napa, CA
CA RWQCB, Oakland, CA

BAY AREA RAPID TRANSIT

Oakland Emergency Generator (OEG) System

CONTRACT # *09EK-130A*

5/8/18

SITE SPECIFIC WORK PLAN (SSWP) #2.2: Early Civil Work

Submittal 0018r2

Oakland Transition Structure Area

WARNING: The attached materials contain security sensitive information (SSI) "For official use only", requiring protection against unauthorized disclosure. These materials may be distributed only on a "Need-to-know" basis by prior written permission from BART; and when unattended, shall be stored in secured location, not accessible to unauthorized person(s).

Contractor: *DMZ Builders*
Contract Number: *09EK-130A*

Submitted By:	Contractor, Clay Cochran	5/8/18 Date
Approved By:	BART Resident Engineer, Jim Sparvoli	5/9/18 Date
Approved By:	BART Project Manager, Javed Khan	5/9/18 Date
Approved By:	BART *[Engineering]* *	Date
Approved By:	BART *[Maintenance]**	Date
Approved By:	BART *[Operations Control Center]*	Date
Approved By:	BART *[Transportation]*	Date
Approved By:	BART *[System Safety]*	Date
Approved By:	BART *[Operations Planning*]*	Date
Approved By:	BART *[BART PD]**	Date
Approved By:	BART *[Operations Liaisons]**	Date
Approved By:	BART *[District Architect]**	Date
Approved By:	BART *[Other BART Department]**	Date
Approved By:	BART *[Rolling Stock and Shops]**	Date
Approved By:	BART *[M&E System Access Committee Chair]*	Date

*If applicable

Project: Oakland Emergency Generator (OEG) System
Contract No.: 09EK-130A
Contractor: DMZ Builders
Site Specific Work Plan: # 2.2
Addendum Letter: N/A
Work Location: Oakland Transition Structure Area
Work Hours (Military Time):

- Weekday: Monday thru Friday from 0700 hrs to 1700 hrs
- Weekend (if required): Saturday and Sunday from 0700 hrs to 1700 hrs.

I. DESCRIPTION OF WORK

This SSWP covers site preparation work including fence demo and install new gate, demo light poles, demo existing asphalt, excavating & grading for foundation work and sanitary sewer relocation. None of the work to be performed under this SSWP will take place within the BART train operating envelope.

Additional SSWPs will address follow-on work.

Due to the small footprint of the Oakland Transition Structure area and the access limitations, DMZ is pursuing a secondary laydown area at Berth 24 near 14th St and Maritime St. Personnel will meet at the secondary laydown area and shuttle to the work area to reduce vehicle usage at the work area. Materials will be staged at the secondary laydown area as needed to maintain an organized work site. Some materials will need to be staged at the work site in the designated Temporary Storage and Laydown Area in the Northwest corner of the OTS area. Excavated and/or demo materials will be offhauled as soon as practical to reduce stockpiling of dirt and debris at the work area. Equipment that is being used for the work task will be staged inside the work area as it is not practical to move this equipment back to the secondary laydown area every day. Access to the site and shall be per approved Site Layout Plan.

II. BART SYSTEM IMPACT

a. <u>WILL THE WORK IN THIS SSWP BE LOCATED?</u>

i. IN AN AREA OPEN TO THE PUBLIC?

- YES (NO)

ii. WITHIN THE BART RIGHT-OF-WAY (ROW)?

- YES (NO)

iii. WITHIN SIX FEET FROM THE NEAREST RUNNING RAIL (TRACK ZONE)?

- YES (NO)

iv. IN AN AREA IN CLOSE PROXIMITY TO UTILITIES TIED TO THE SYSTEM?

- (YES) NO

b. Other BART Operating Facilities Potentially Affected by this Work

Oakland Transition Structure Area – Demolition and grading work inside the fenced area outside the OTS will reduce contractor and BART maintenance vehicle parking space. The south gate to the Oakland Transition Structure Area will be inaccessible during this work – access to OTS will be via the north gate. See attachment 1 – page 12 for Google Map view of work area.

III. SAFETY

a. Shift will start with a Safety Meeting for a minimum of 15 minutes, which must include the assigned EIC(s). All Safety Meetings shall include (at a minimum):

i. All personnel must attend and discuss the Job Hazard Analysis (JHA) in order to identify all possible dangers or hazards in the work zone or job site.
ii. Explanation of emergency evacuation procedures and egress points.
iii. BART Employee in Charge (EIC) will conduct a Site Specific Safety Briefing prior to starting any work activity. All individuals that enter the worksite during the shift shall receive a Safety Briefing by the EIC.
iv. All personnel are required to sign the EIC Safety Briefing Roster.
v. The EIC will notify the crew when it is safe to begin work.

b. The Contractor Supervisor will be onsite throughout the work shift.

c. If the BART EIC or BART Representative sees any unsafe condition, he/she will stop the work and work will not re-start until the EIC gives the clear signal. Contractor shall assist with restoring safe conditions as required.

d. All employees will wear required personal protective equipment.

Mandatory PPE includes

i. BART approved safety vest
ii. BART approved hard hats
iii. Eye protection
iv. Work boots
v. BART Badge (or temporary C Badge as applicable)

PPE to be Provided as Needed

i. Face Shield
ii. Goggles
iii. Dust Mask
iv. Ear Plugs
v. Gloves

e. BART Operations Rules & Procedures (OR&P)

i. Rule 1101: The rules contained in this book apply to all District employees, Contractors and others working on BART property.

f. Types of Work Clearance (Work Orders) that may be Requested in Work Area:
   i. None of the work to be performed under this SSWP will take place within the BART train operating envelope or mainline right-of-way.

g. No one will be permitted to be within the excavation until trench is in compliance with OSHA standards.

h. No one will be permitted to be within 5' of the leading edge of an excavation 5' or deeper without proper fall protection, including but not limited to DMZ and BART personnel.

i. Open excavations will be protected with temporary handrailing or covered to prevent DMZ, BART or other personnel from inadvertently falling into excavations while passing through yard or accessing the OTS.

j. Work areas will be leveled at the end of each shift as much as possible to eliminate trip hazards to personnel passing through the work area after normal working hours. Steel plates will be used where needed to maintain access over open trenches.

k. During heavy lifting, labor crews must use proper lifting practices as to not injure themselves.

l. Caution will be taken with any use of power tools or operation of the excavator to avoid any injury. All employees will be properly trained in the use of all tools and equipment before they will be permitted to use them.

m. Supervisors will participate in applicable BART safety training course.

n. BART specific employee safety training will be administered to all DMZ employees and subcontractors per specification 01 35 14 and approved Safety Training Plan.

o. DMZ will have all full-time employees who will work two weeks or more apply for a BART Contractor Badge immediately when hired to work on this project (BART will make temporary C-badges available temporarily while employees are waiting for official Contractor Badge to be processed).

p. Laydown Area: When an enclosure is used in a laydown area on BART property, it should be secured with Contractor and BART 10x14 lock (daisy chained) in the event something does go wrong and BART needs to enter the enclosure. Contractor should include contact information on the outside of the enclosure. The enclosure should also be constructed of fire retardant materials.

q. Contractor shall document (photograph, video) site conditions before and after work. SSI protocol applies to photo/video taken inside the OTS, SFTS and TBT structures.

r. A copy of this SSWP (and future SSWPs) governing work at this location must remain on site for the duration of the related work and immediately available upon request. SSWPs will be kept in a water proof daisy chained box onsite at the Oakland Transition Structure parking lot for EICs and staff to access. An appropriate location will be determined in the field with the EIC.

s. Fire department and other emergency services access must be maintained at all times.

t. Transportation Worker Identification Credential (TWIC) card is required for access through the Port of Oakland. Port's protocol is that one TWIC card holder may escort up to five (5) persons who do not have TWIC cards along the District's access route to the OTS. DMZ and its subcontractors will comply with the Port's protocol at the Port's Security Gate.

IV. REQUESTED BART SUPPORT

a. Site Access (Access to the work site is via the the Port of Oakland Trapac Terminal)
b. Site Inspector
c. Storage/Laydown area and work area access in the Oakland Transition Structure parking lot area (Laydown area will be secured with BART 10x14 lock daisy chained with Contractor lock.)
d. BART electrical support to facilitate the removal of two light poles as discussed below.

BART support to be identified via track allocation request with 96 hour advance notice. Contractor will notify BART of any cancellations as soon as possible.

V. WORK DETAILS

a. Governing Codes and References

i. BFS R 3.0.3 January 2016

b. Work Scope

The general sequence of work will be fence demo and install new gate, demo light poles, demo asphalt, sanitary sewer relocation, grading for foundation work. Prior to any excavation work on site, a USA North 811 Dig Ticket will be created to notify utility owners to mark their facilities in within the work area.

i. New Gate - The first item of work will be removing 12' of fence to install a new gate in the southwest corner of the OTS area. Once completed, this will provide another entrance into/out of the OTS area that will relieve congestion at the other access points. Prior to fence demolition, a temporary k rail and fence barrier will be installed at the location of the new gate. Temporary fence will be mounted to the existing k rail that is sitting adjacent to the existing security fence. This temporary barrier will be on the outside of the existing fence line to allow the fence crew to work from inside the fenced area for removal of the existing fence and installation of the new gate. DMZ will adjust k rail as needed to maintain Port of Oakland traffic safe access around the work area. The temporary barrier will be fastened to the existing fencing to maintain security such that no human access will be allowed through the temporary barrier. The temporary barrier will be removed once the new gate has been completely installed.

ii. Demo Light Poles – Demolition of two existing light poles in the open area west of the OTS may happen concurrently with the new

gate installation but should be complete prior to asphalt demolition. Two existing fixtures, poles and cabling will be removed per contract as shown on sheet E102 (attachment 2, page 15).

iii. **Demo Asphalt –** Existing drainage inlet to be protected according to approved Erosion and Sediment Control Plan. Care will be taken not to damage the existing inlet during asphalt demolition activities. An excavator with breaker attachment will be used to demo existing asphalt within contract limits. At DMZ's option, an asphalt grinder may be used to remove the existing asphalt. See attached drawing C104 for limit of asphalt removal (attachment 2, page 14). During this phase, the work area will be brought down and leveled to approximately Elev. 12.15 to 13.80 from north to south respectively (approximately even with the bottom of existing asphalt). Soils removed during this phase will be loaded into a dump truck and off-hauled to disposal site. Asphalt debris removed during this phase will be loaded into a dump truck and off-hauled to a recycle facility.

- **Temporary Access Measures -** To maintain access through the yard and into the OTS, temporary baserock or dirt ramps will be placed at the existing south entrance gate and at the front of the OTS. The ramps will allow vehicles and personnel to transition down from existing pavement onto the leveled dirt work area. Temporary ramps and access ways will be maintained so that access is permitted through the work area.

iv. **Sanitary Sewer Relocation -** Location of existing utilities will be field verified after asphalt demolition and grading but before additional excavation work. More specifically, utilities shown on U101 will be potholed to verify location and depth at Sanitary Sewer relocation crossings before SS relocation work starts (attachment 2, page 18). An excavator will be used to excavate for Sanitary Sewer relocation. Trench shoring and manhole box shoring will be used as necessary to ensure safe excavations in compliance with OSHA regulations. New manholes and sewer piping will be installed and backfilled per contract specifications. Once new sewer piping is functioning, existing SS line that conflicts with new generator pile foundation will be removed and manholes will be patched. **This method of relocating the sewer will help ensure existing facilities connected to the sewer system are not impacted.** It is not anticipated that existing bathroom/break room facilities will be impaired. However, temporary bathrooms will be provided as needed to ensure bathroom facilities are available at all times. Backfill compaction testing to be completed according to Contractor's approved QC Plan. Soils removed during this phase will be loaded into a dump truck and off-hauled to disposal site.

v. **Excavating & Grading –** Once the above work is complete, the work area will be leveled and prepared for follow-on foundation work. Soils removed during this phase will be loaded into a dump truck and off-hauled to disposal site.

c. **Work Schedule Breakdown**
   - **i.** New Gate – 6/4/18 to 6/15/18
   - **ii.** Demo Light Poles – 6/4/18 to 6/8/18
   - **iii.** Demo Asphalt – 6/18/18 to 6/22/18
   - **iv.** Sanitary Sewer Relocation – 6/25/18 to 7/11/18
   - **v.** Grading – 7/11/18 to 7/13/18

d. Equipment and Manpower
   - **i.** Equipment – This phase of construction will include pick-up trucks, excavator, loader, forklift, and boom lift or scissor lift (possible asphalt grinder). Equipment will be stored in the work area within the designated staging area throughout the time it is needed for this work.
   - **ii.** Manpower – DMZ 1 Operator, 3 Laborers and 2 Electricians
     Fence Sub 2-4 Laborers

VI. CONTINGENCY PLANS

- DMZ will coordinate with ongoing contracts and contractors in the work area.
- Should any unauthorized person enter the site, they will be escorted out of the site and BART Police notified immediately.
- Upon request by proper authority the Operations Control Center (OCC), BART Police Department, and/or the BART Safety Department, etc. the Contractor will stop work immediately. The Contractor will return the site to a safe condition expeditiously and vacate the area as quickly and as safely as possible, lending all reasonable support to the restoration of revenue service if so requested.
- The Contractor will immediately notify the EIC or BART Representative of any fires or other emergencies, who will then notify BART OCC. If the EIC is incapacitated, the Contractor's Supervisor will notify BART OCC and 911 or BART Police. The work will be stopped and work area will be secured from any unauthorized individuals until emergency services arrive.
- These procedures may be amended, with concurrence from the Resident Engineer who will notify Operations Liaisons and the assigned BART Representative, as needed to further the work and additionally safety requirements may be considered and implemented. The goal is to complete the work while ensuring the safety of BART patrons and employees and the integrity of the BART System.
- If patrons or pedestrians ask any questions, they will be referred to BART Community Relations. DMZ shall not have any unauthorized communication with residents or patrons.
- It is important to remember that pre-incident indicators of a planned terrorist attack may come months or even years apart. Therefore, it is extremely important to document every fragment of information, no matter how insignificant it may appear, and forward this information to BART Police. Remember, **"If you see something, say something".**

Site Specific Contingency Plans include –

- Any condition seen to be unsafe, the BART EIC and/or inspector will be notified immediately. The EIC and/or inspector will notify BART OCC.
- Existing security fence gets damaged – Notify EIC or BART Representative. If possible, fix fence before leaving site. If not possible to fix before leaving site, secure area with temporary fence/barrier. The security of the Oakland Transition Structure must be maintained at all times.
- Existing utility strike – Notify EIC or BART Representative. Notify utility owner/company. Await further instruction. Utility owner contact information will be identified when the USA North 811 Dig Ticket has been created.
- **None of this work is being done within the BART train operating envelope so there will be no risk of fouling track or equipment breaking down and affecting BART revenue services.**
- If in the unlikely event there is an altercation, threat of violence, or similar event, the work will stop, the appropriate Supervisor or Supervisors will be summoned to the site, the governing authorities advised, offending individual or individuals removed from the site (by BART Police if necessary). Reports including UOR's completed and filed before the end of shift. **This is a Zero Tolerance Policy.**

VII. OWNER AND GENERAL CONTRACTOR INFORMATION

Contractor:	
Project Manager: Clay Cochran **(response time 2 hours)**	510-815-0161
Project Superintendent: Brian Slattengren **(response time 1 hour)**	925-771-0318
Safety Representative: Larry Olvera **(response time 1 hour)**	408-687-0036
BART:	
Project Manager: Javed Khan	510-414-5552
Resident Engineer: Jim Sparvoli **(response time 2 hours)**	510-368-2565
Operations Liaisons: Ben V. Williams Jr.	510-287-4779(o)
	510-421-7756(c)
Operations Control Center	510-834-1297
BART Police Watch, Commander	510-464-7020
BART Project Duty Officer	510-910-5164
Port of Oakland:	
Port Wharfinger: Justin Taschek	510-627-1309

EMERGENCYSERVICES

BART Police	24-HR Emergency 510.464.7000
California Highway Patrol	24-Hr Emergency 911
Oakland Police	Non-Emergency 510-777-3333 Emergency 510-777-3211 Or 911
Oakland Fire Department	24-HR Emergency 510-444-1616 or 911
Medical Clinic – Oakland: Concentra Medical Center 384 Embarcadero W Oakland, CA 94607	510-465-9565
Medical Hospital – Oakland: Atlas Bates Summit Medical Center South 357 34th St Oakland, CA 94609	510-655-4000
BART Operations Control Center (OCC)	510.834.1297

VIII. DRAWINGS/ATTACHMENTS/CUT-SHEETS

Attachment 1 – Google Map View (Page 11 to 12)
Attachment 2 – Relevant Contract Drawings (page 13 to 18)
Attachment 3 – Equipment Cut-Sheets (page 19 to 28)

Attachment 1 – Google Map View

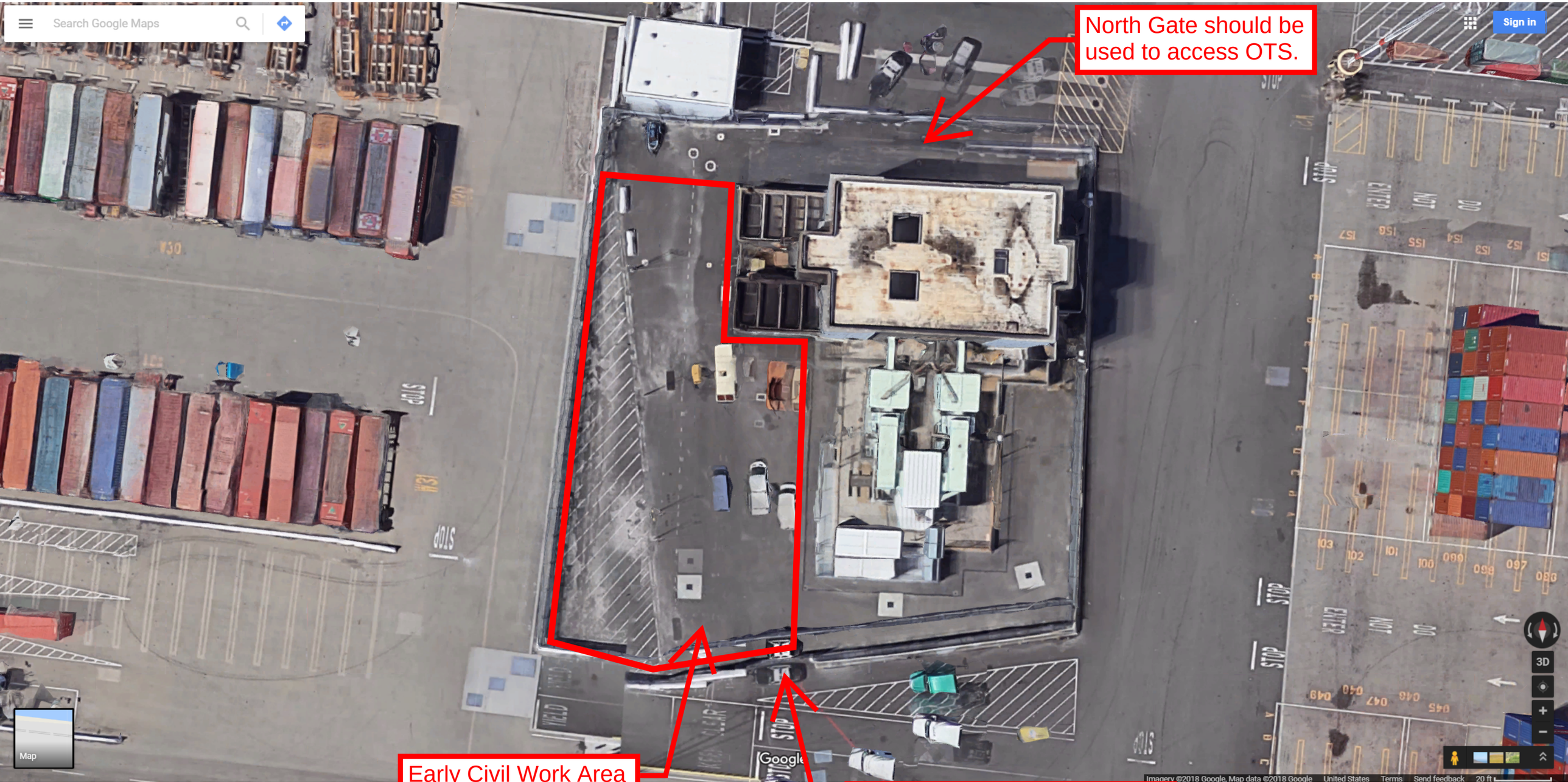
North Gate should be used to access OTS.
Early Civil Work Area
South Gate will be inaccessible during this work.
Search Google Maps
Sign in
Map
3D
Imagery ©2018 Google, Map data ©2018 Google
United States
Terms
Send feedback
20 ft

Attachment 2 – Relevant Contract Drawings

Page 14 – Grading and Fence Layout Plan, C104
Page 15 – Existing Electrical and Underground, E102
Page 16 – Rolling Gate Details, C103
Page 17 – Drainage Details, CS15
Page 18 – Existing Utilities and SS Relocation Plan, U101

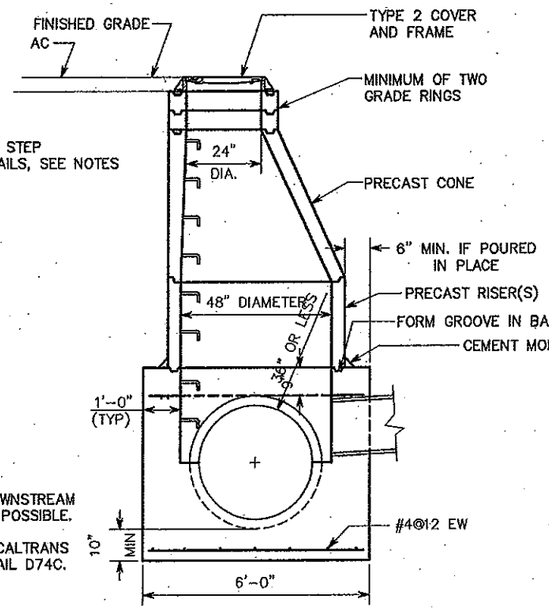

NOTES:

1. GROUT ALL JOINTS.
2. ALL 4000 PSI PCC.
3. PLACE STEPS ON DOWNSTREAM SIDE OF MANHOLE IF POSSIBLE.
4. STEP DETAILS: SEE CALTRANS STANDARD PLAN DETAIL D74C.

SECTION A CS15
SCALE: 1/2"=1'-0"

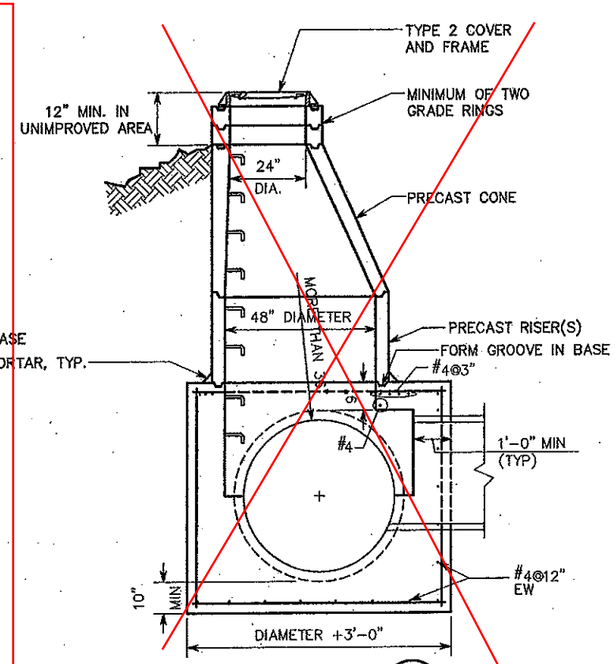

SECTION B CS15
SCALE: 1/2"=1'-0"

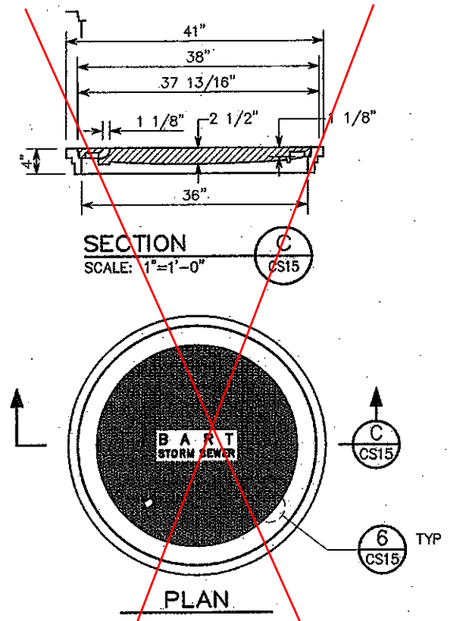

SECTION C CS15
SCALE: 1"=1'-0"

PLAN

TYPE 1 COVER AND FRAME
(WEIGHT=700#)

DETAIL 3 CS15
SCALE: 1"=1'-0"

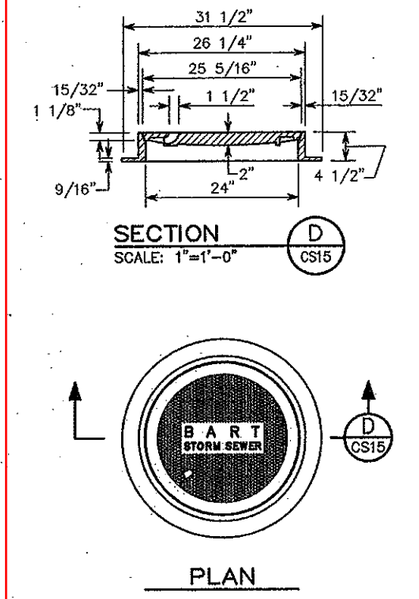

SECTION D CS15
SCALE: 1"=1'-0"

PLAN

TYPE 2 COVER AND FRAME
(WEIGHT=320#)

DETAIL 4 CS15
SCALE: 1"=1'-0"

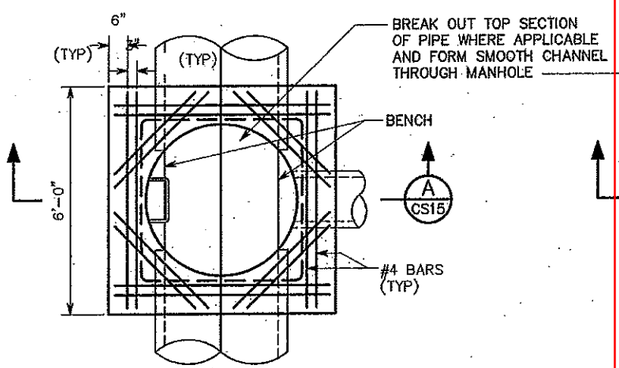

PLAN

MANHOLE FOR PIPE DIAMETER 36" OR LESS

DETAIL 1 CS15
SCALE: 1/2"=1'-0"

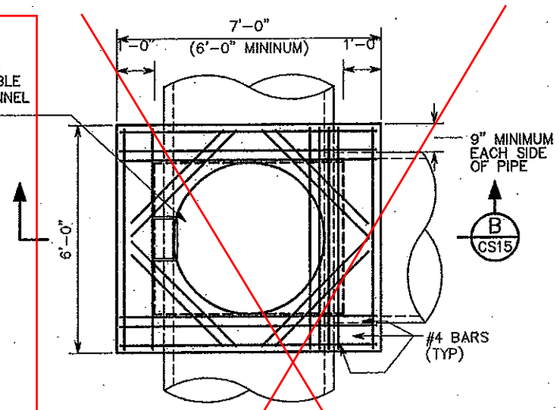

PLAN

MANHOLE FOR PIPE DIAMETER MORE THAN 36"

DETAIL 2 CS15
SCALE: 1/2"=1'-0"

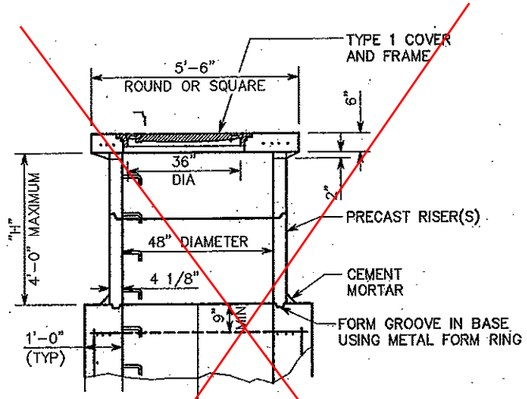

ALTERNATE CHIMNEY AND GRADE SLAB
(REQUIRED WHERE "H" IS LESS THAN 4'-0")

DETAIL 5 CS15
SCALE: 1/2"=1'-0"

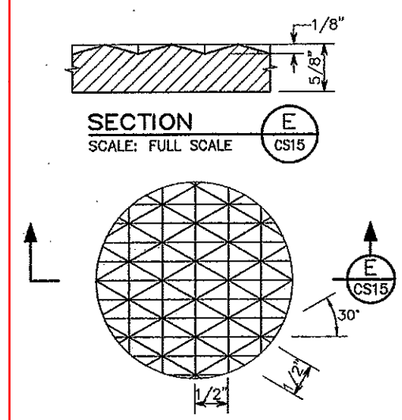

SECTION E CS15
SCALE: FULL SCALE

PLAN

MANHOLE COVER PATTERN

DETAIL 6 CS15
SCALE: FULL SCALE

REV.	DATE	BY	CHKD	APP.	DESCRIPTION
01	09/08	KC	[illegible]	[illegible]	REVISED PER BECO EM001536

Page 17 of 28

HALF SIZE

THIS DRAWING IS INTENDED SOLELY FOR BART USE IN ORDER TO DESIGN, CONSTRUCT, ALTER, OR MAINTAIN ITS FACILITIES. BART DOES NOT RECOMMEND OR WARRANT USE OF THE DRAWING FOR ANY OTHER PURPOSE. USE OF THE DRAWING BEYOND THE INTENDED PURPOSE WILL BE AT USER'S OWN RISK.

Page 17 of 28

ORIGINAL DRAWING BEARS THE REGISTERED PROFESSIONAL ENGINEER SEAL NO.: C40366 AND SIGNATURE OF: ERSTEN Y. IMAOKA

BART

		DATE
DESIGNED:	BATC	09/91
DRAWN:	[illegible]	09/08
CHECKED:	[illegible]	09/08
APPROVED:	[illegible]	09/08

BART FACILITIES STANDARDS
CIVIL

DRAINAGE DETAILS
STORM SEWER MANHOLES

REF. NO. CS15
SIZE: D
SCALE: NONE
CONTRACT 09EK-130A
REV. 01
SHEET NO. CS15
FIG. NO. 019

Attachment 2 – Equipment Cut-sheets

Equipment shown may not exactly match equipment that is available at the time of the work but is representative of the size and type.

RITCHIE Specs Everything about Equipment

Select language

Current number of specifications 11838

CATERPILLAR 315B L HYDRAULIC EXCAVATOR

VIEW ARTICLES ON THIS ITEM

Print specification

Looking to purchase this item?

Find a Caterpillar 315B L Hydraulic Excavator being sold at Ritchie Bros. auctions.

Need to sell equipment?

Complete this form and a Ritchie Bros. representative will contact you.

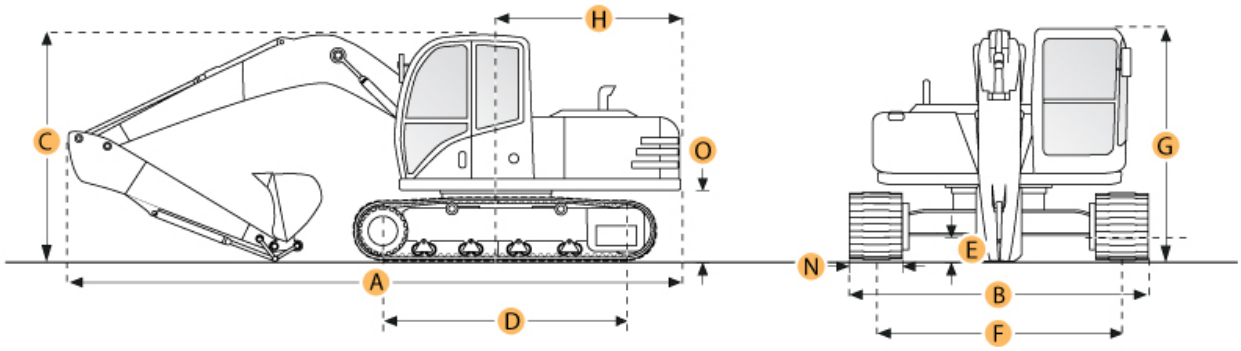

Selected Dimensions

Boom/Stick Option	Boom/Stick Option (HEX) 1 ▼	
I. MAX CUTTING HEIGHT	27.9 ft in	8500 mm
J. MAX LOADING HEIGHT	19.5 ft in	5930 mm
K. MAX REACH ALONG GROUND	26.4 ft in	8040 mm
L. MAX VERTICAL WALL DIGGING DEPTH	14.4 ft in	4400 mm
M. MAX DIGGING DEPTH	17.4 ft in	5310 mm
Dimensions		
B. WIDTH TO OUTSIDE OF TRACKS	8.5 ft in	2590 mm
D. LENGTH OF TRACK ON GROUND	10.4 ft in	3170 mm
E. GROUND CLEARANCE	1.5 ft in	460 mm
G. HEIGHT TO TOP OF CAB	9.4 ft in	2880 mm
H. TAIL SWING RADIUS	8 ft in	2450 mm
O. COUNTERWEIGHT CLEARANCE	3.4 ft in	1050 mm
Undercarriage		
F. TRACK GAUGE	6.5 ft in	1990 mm
N. SHOE SIZE	23.6 in	600 mm

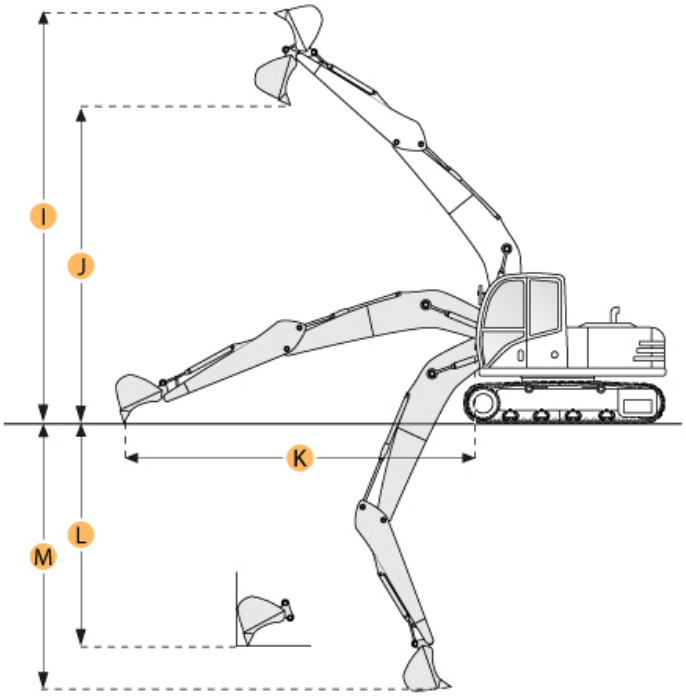

Specification

Engine		
MAKE	Caterpillar	
MODEL	3046T	
GROSS POWER	102 hp	76.1 kw
NET POWER	99 hp	73.8 kw
POWER MEASURED @	2100 rpm	
DISPLACEMENT	305 cu in	5 L
ASPIRATION	Turbocharged	
NUMBER OF CYLINDERS	4	
Operational		
OPERATING WEIGHT	36200 lb	16420 kg
FUEL CAPACITY	74 gal	280 L
COOLING SYSTEM FLUID CAPACITY	5 gal	19 L
HYDRAUILC SYSTEM FLUID CAPACITY		185 L

	49.7 gal	
ENGINE OIL CAPACITY	3.4 gal	13 L
SWING DRIVE FLUID CAPACITY	0.79 gal	3 L
OPERATING VOLTAGE	24 V	
ALTERNATOR SUPPLIED AMPERAGE	50 amps	
HYDRAULIC SYSTEM RELIEF VALVE PRESSURE	4980 psi	34335.9 kPa
HYDRAULIC PUMP FLOW CAPACITY	69.7 gal/min	264 L/min
Swing Mechanism		
SWING SPEED	10.1 rpm	
SWING TORQUE	28420 lb ft	38532.3 Nm
Undercarriage		
SHOE SIZE	23.6 in	600 mm
GROUND PRESSURE	5.8 psi	39.6 kPa
MAX TRAVEL SPEED	3.4 mph	5.5 km/h
DRAWBAR PULL	29480 lb	131.1 kN
TRACK GAUGE	6.5 ft in	1990 mm
Buckets		
REFERENCE BUCKET CAPACITY	0.64 yd3	0.49 m3
MINIMUM BUCKET CAPACITY	0.48 yd3	0.37 m3
MAXIMUM BUCKET CAPACITY	1.1 yd3	0.83 m3
Boom/Stick Option (HEX) 1		
BOOM/STICK OPTION (HEX) 1	boom w/ stick 1850mm	
MAX DIGGING DEPTH	17.4 ft in	5310 mm
MAX REACH ALONG GROUND	26.4 ft in	8040 mm
MAX CUTTING HEIGHT	27.9 ft in	8500 mm
MAX LOADING HEIGHT	19.5 ft in	5930 mm
MAX VERTICAL WALL DIGGING DEPTH	14.4 ft in	4400 mm
Boom/Stick Option (HEX) 2		
BOOM/STICK OPTION (HEX) 2	Boom / Stick 7'5" (2250mm)	
SHIPPING HEIGHT OF UNIT	9.1 ft in	2780 mm
SHIPPING LENGTH OF UNIT	27.8 ft in	8470 mm
MAX DIGGING DEPTH	18.7 ft in	5705 mm
MAX REACH ALONG GROUND	27.6 ft in	8420 mm
MAX CUTTING HEIGHT	28.7 ft in	8735 mm
MAX LOADING HEIGHT	20.2 ft in	6150 mm
MAX VERTICAL WALL DIGGING DEPTH	16.2 ft in	4930 mm
Boom/Stick Option (HEX) 3		
BOOM/STICK OPTION (HEX) 3	Boom / Stick 8'6" (2600mm)	
SHIPPING HEIGHT OF UNIT	9.4 ft in	2860 mm
SHIPPING LENGTH OF UNIT	27.9 ft in	8500 mm
MAX DIGGING DEPTH	19.9 ft in	6055 mm
MAX REACH ALONG GROUND	28.7 ft in	8740 mm
MAX CUTTING HEIGHT	29.2 ft in	8910 mm
MAX LOADING HEIGHT	20.7 ft in	6320 mm
MAX VERTICAL WALL DIGGING DEPTH	17.5 ft in	5335 mm
Boom/Stick Option (HEX) 4		
BOOM/STICK OPTION (HEX) 4	Boom / Stick 10'2" (3100mm)	
SHIPPING HEIGHT OF UNIT	9.8 ft in	2990 mm
SHIPPING LENGTH OF UNIT	28 ft in	8520 mm
MAX DIGGING DEPTH	21.5 ft in	6555 mm
MAX REACH ALONG GROUND	30 ft in	9140 mm
MAX CUTTING HEIGHT	29.4 ft in	8970 mm
MAX LOADING HEIGHT	21 ft in	6410 mm
MAX VERTICAL WALL DIG DEPTH	18.3 ft in	5570 mm
Dimensions		
WIDTH TO OUTSIDE OF TRACKS	8.5 ft in	2590 mm
HEIGHT TO TOP OF CAB	9.4 ft in	2880 mm
GROUND CLEARANCE	1.5 ft in	460 mm
COUNTERWEIGHT CLEARANCE	3.4 ft in	1050 mm
TAIL SWING RADIUS	8 ft in	2450 mm
LENGTH OF TRACK ON GROUND	10.4 ft in	3170 mm

© 2007-2018 RitchieSpecs Equipment Specifications Ritchie Bros. Auctioneers © | Terms of Use | Privacy Statement
OEM specifications are provided for base units. Actual equipment might vary with options.

210L EP / 210L

Operating Weights	210L EP	210L
With Full Fuel Tank, 79-kg (175 lb.) Operator, and Standard Equipment	4794 kg (10,569 lb.)	5137 kg (11,326 lb.)
Typical with Canopy, MFWD, Single Battery, 2x4 Valve, 0.86-m³ (1.125 cu. yd.) Loader Bucket, 454-kg (1,000 lb.) Wheel Weights, Deluxe Electrical, and 2134-mm (84 in.) Box Blade	6100 kg (13,449 lb.)	6444 kg (14,206 lb.)
Optional Components		
Cab (weight difference between base equipment and option)	227 kg (500 lb.)	227 kg (500 lb.)
Box Blade		
2134-mm (84 in.)	771 kg (1,700 lb.)	771 kg (1,700 lb.)
2235-mm (88 in.)	816 kg (1,800 lb.)	816 kg (1,800 lb.)
Wheel Weights	454 kg (1,000 lb.)	454 kg (1,000 lb.)
Hitch Weights	318 kg (700 lb.) / 681 kg (1,500 lb.)	318 kg (700 lb.) / 681 kg (1,500 lb.)
Front Loader Coupler	286 kg (630 lb.)	286 kg (630 lb.)

Overall Dimensions	210L EP / 210L
A Ground Clearance, Minimum	262 mm (10.3 in.)
B Overall Length, Transport (without box blade)	5.31 m (17 ft. 5 in.)
C Transport Height	
Canopy	2.62 m (8 ft. 7 in.)
Cab	2.64 m (8 ft. 8 in.)
D Length from Axle to Axle (MFWD axle)	2.16 m (7 ft. 1 in.)
E Width Over Tires	2.13 m (7 ft. 0 in.)

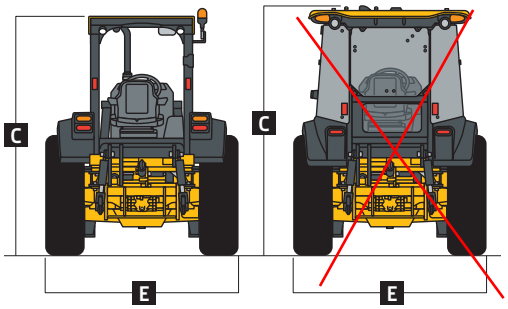

210L EP/210L with Canopy

210L EP/210L with Cab

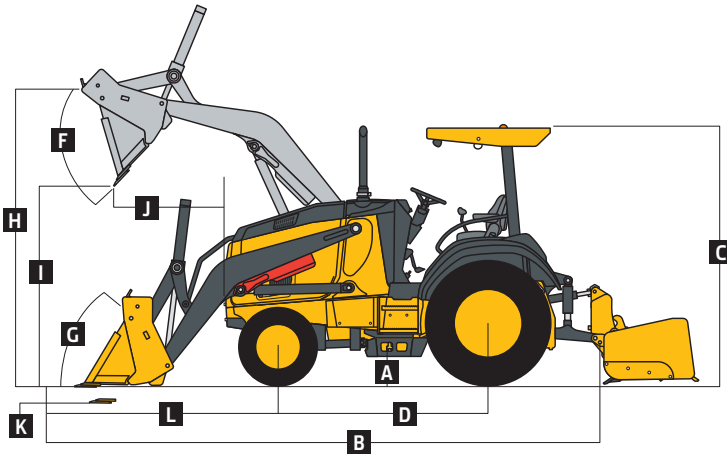

210L EP/210L Tractor Loader with Canopy

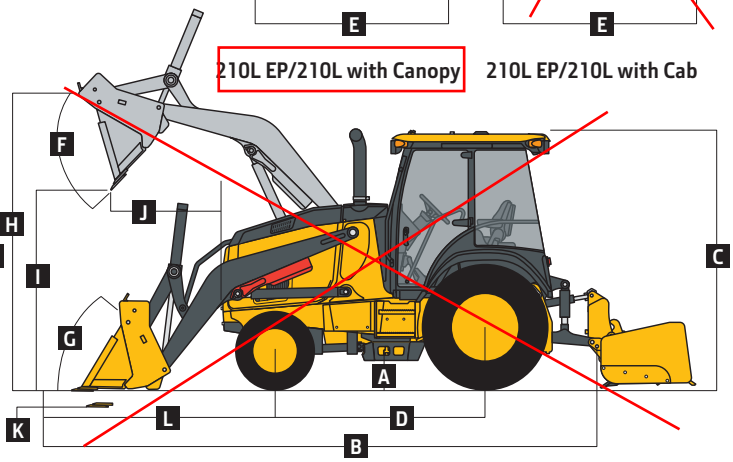

210L EP/210L Tractor Loader with Cab

RITCHIE Specs Everything about Equipment

Select language

Current number of specifications 11838

Home → Spec Search → All Types → Scissor Lift → Genie → GS1930

GENIE GS1930 SCISSOR LIFT

VIEW ARTICLES ON THIS ITEM

Print specification

Looking to purchase this item?

Find a Genie GS1930 Scissor Lift being sold at Ritchie Bros. auctions.

Need to sell equipment?

Complete this form and a Ritchie Bros. representative will contact you.

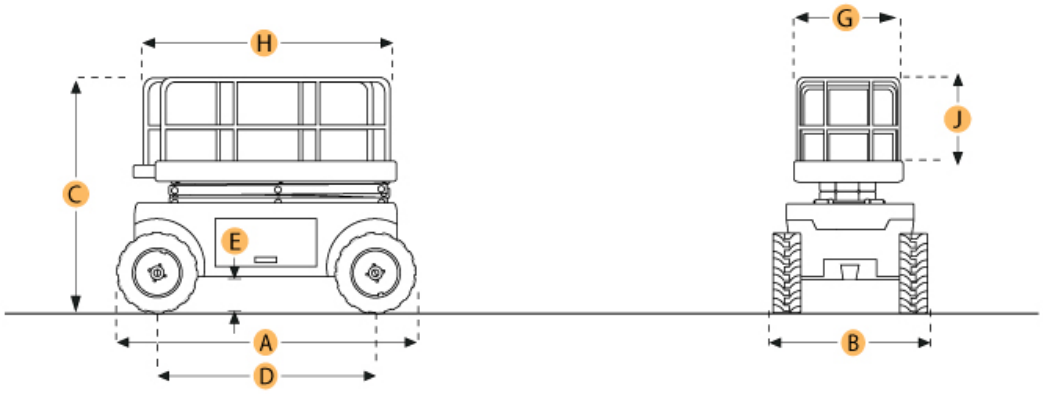

Selected Dimensions

Dimensions		
A. OVERALL LENGTH	6 ft in	1830 mm
B. OVERALL WIDTH	2.5 ft in	760 mm
C. HEIGHT W/ RAILS	6.6 ft in	2000 mm
D. WHEELBASE	4.3 ft in	1320 mm
E. GROUND CLEARANCE	2.4 in	60 mm
Platform		
F. MAX PLATFORM HEIGHT	19 ft in	5790 mm
G. PLATFORM WIDTH	29.1 in	740 mm
H. PLATFORM LENGTH	64.2 in	1630 mm
I. DECK EXTENSION	35.8 in	910 mm

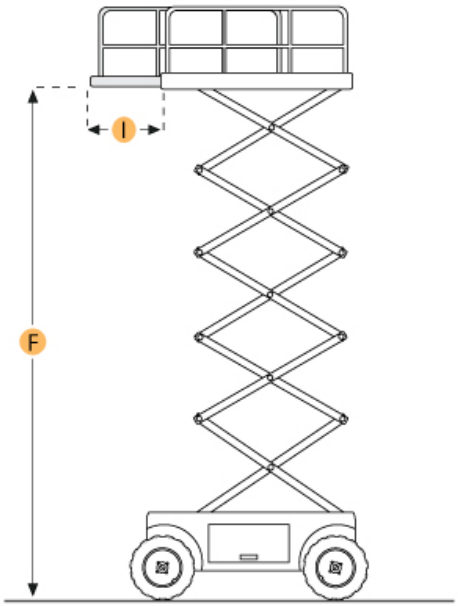

Specification

Engine		
SYSTEM VOLTAGE	24 V	
NUMBER OF BATTERIES	4	
Operational		
OPERATING WEIGHT	2702.9 lb	1226 kg
HYDRAUILC SYSTEM FLUID CAPACITY	3.8 gal	14.2 L
MAX SPEED	2.5 mph	4 km/h
TIRE SIZE	12x4.5x8	
TIRE FILL/TYPE	Solid non-marking	
Platform		
MAX WORKING HEIGHT	25.6 ft in	7790 mm
MAX PLATFORM HEIGHT	19 ft in	5790 mm
MAX PLATFORM WEIGHT CAPACITY	599.7 lb	272 kg
PLATFORM LENGTH	64.2 in	1630 mm
PLATFORM WIDTH	29.1 in	740 mm
LIFT TIME	16 sec	
LOWER TIME	25 sec	
DECK EXTENSION	35.8 in	910 mm
Dimensions		
OVERALL LENGTH	6 ft in	1830 mm
OVERALL WIDTH	2.5 ft in	760 mm

HEIGHT W/ RAILS	6.6 ft in	2000 mm
HEIGHT W/O RAILS	5.7 ft in	1750 mm
WHEELBASE	4.3 ft in	1320 mm
TURNING RADIUS	5.1 ft in	1550 mm
GROUND CLEARANCE	2.4 in	60 mm

Viewing Photo 1 of 5

© 2007-2018 RitchieSpecs Equipment Specifications Ritchie Bros. Auctioneers © | Terms of Use | Privacy Statement
OEM specifications are provided for base units. Actual equipment might vary with options.

RITCHIE Specs Everything about Equipment

Select language

Current number of specifications 11838

GENIE S45 BOOM LIFT

VIEW ARTICLES ON THIS ITEM

Print specification

Looking to purchase this item?

Find a Genie S45 Boom Lift being sold at Ritchie Bros. auctions.

Need to sell equipment?

Complete this form and a Ritchie Bros. representative will contact you.

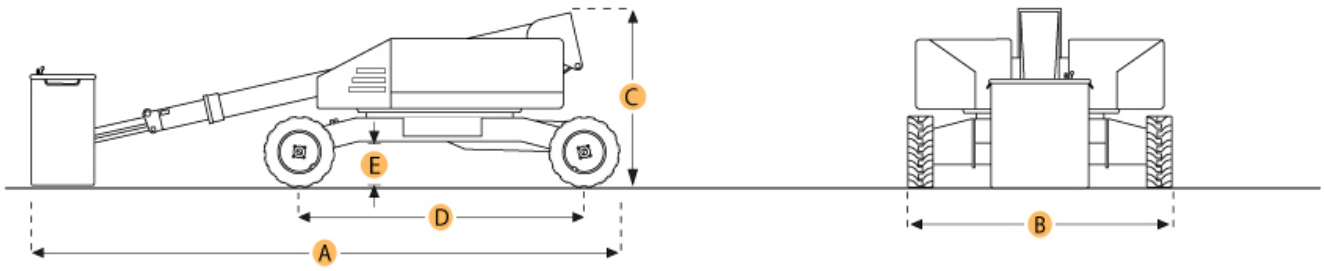

Selected Dimensions

Dimensions		
A. OVERALL LENGTH	24.2 ft in	7390 mm
B. OVERALL WIDTH	7.5 ft in	2300 mm
C. OVERALL HEIGHT - MAST LOWERED	8.2 ft in	2490 mm
D. WHEELBASE	7.2 ft in	2200 mm
E. GROUND CLEARANCE	1.3 in	32 mm
Platform		
F. MAX PLATFORM HEIGHT	40 ft in	12200 mm
G. MAX HORIZONTAL REACH	31.7 ft in	9650 mm

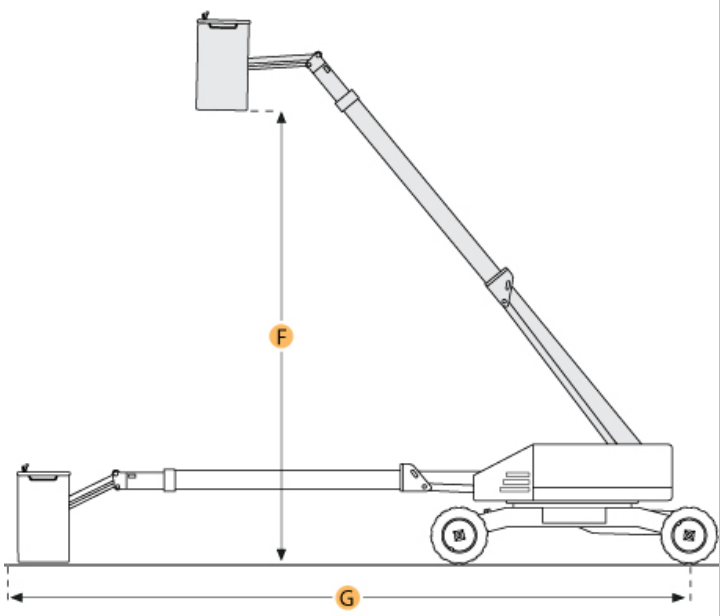

Specification

Engine		
MAKE	Ford	
MODEL	DSG 423	
GROSS POWER	75 hp	55.9 kw
FUEL TYPE	Gas/LPG	
Operational		
OPERATING WEIGHT	14790.8 lb	6709 kg
FUEL CAPACITY	20.1 gal	76 L
HYDRAUILC SYSTEM FLUID CAPACITY	44.9 gal	170 L
MAX SPEED	4.8 mph	7.7 km/h
TIRE SIZE	12-16.5 NHS	
Platform		
MAX WORKING HEIGHT	46.6 ft in	14200 mm
MAX PLATFORM HEIGHT	40 ft in	12200 mm
MAX HORIZONTAL REACH	31.7 ft in	9650 mm
MAX PLATFORM WEIGHT CAPACITY	500.4 lb	227 kg
PLATFORM LENGTH	96.1 in	2440 mm
PLATFORM WIDTH	29.9 in	760 mm
PLATFORM ROTATION	160 degrees	
Dimensions		
OVERALL LENGTH	24.2 ft in	7390 mm
OVERALL WIDTH	7.5 ft in	2300 mm
OVERALL HEIGHT - MAST LOWERED	8.2 ft in	2490 mm
WHEELBASE		2200 mm

	7.2 ft in	
TURNING RADIUS	15.7 ft in	4780 mm
GROUND CLEARANCE	1.3 in	32 mm

Viewing Photo 1 of 4

© 2007-2018 RitchieSpecs Equipment Specifications Ritchie Bros. Auctioneers © | Terms of Use | Privacy Statement
OEM specifications are provided for base units. Actual equipment might vary with options.

RITCHIE Specs Everything about Equipment

Select language

Current number of specifications 11838

JLG G10-55A TELESCOPIC FORKLIFT

VIEW ARTICLES ON THIS ITEM

Print specification

Looking to purchase this item?

Find a JLG G10-55A Telescopic Forklift being sold at Ritchie Bros. auctions.

Need to sell equipment?

Complete this form and a Ritchie Bros. representative will contact you.

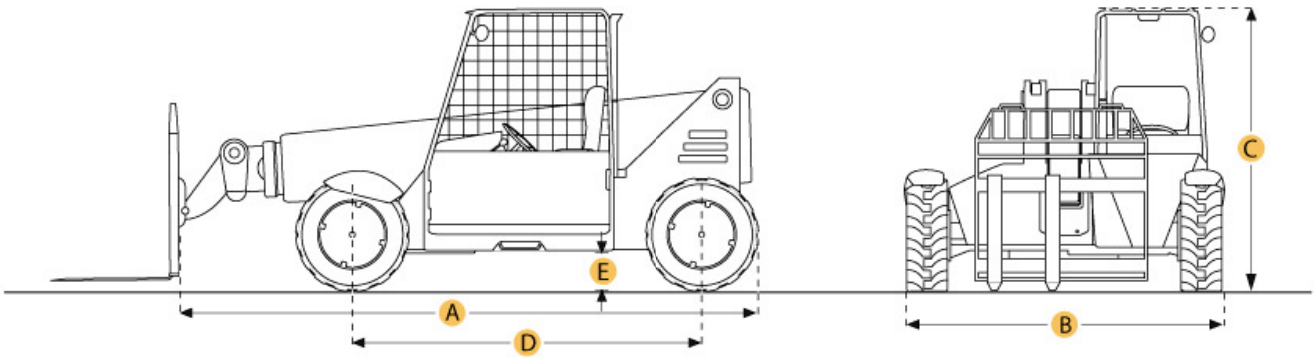

Selected Dimensions

Dimensions		
A. LENGTH TO FORK FACE	20 ft in	6090 mm
B. WIDTH OVER TIRES	8.4 ft in	2560 mm
C. OVERALL HEIGHT	8.4 ft in	2560 mm
D. WHEELBASE	12 ft in	3650 mm
E. GROUND CLEARANCE	18 ft in	457 mm
Lift		
F. MAX LIFT HEIGHT	55.1 ft in	16800 mm
G. MAX FORWARD REACH	42 ft in	12800 mm

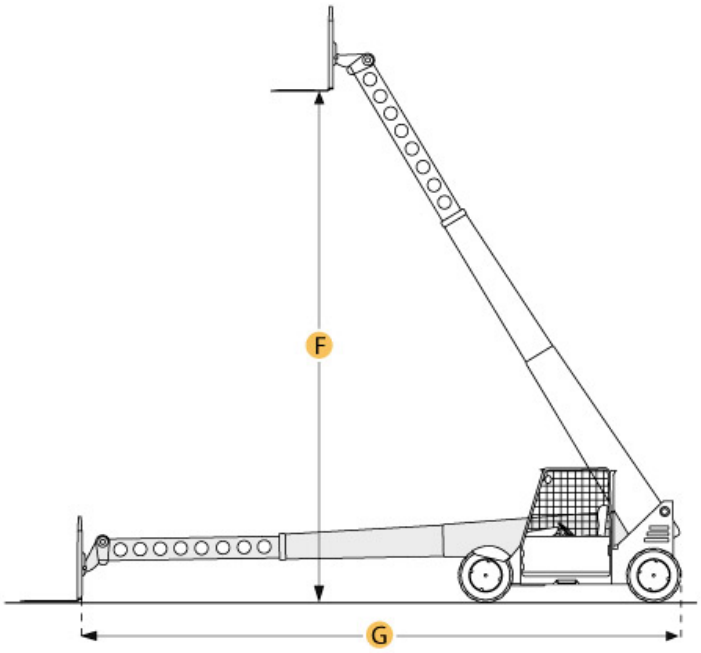

Specification

Engine		
MAKE	John Deere	
MODEL	e 4045TF275	
GROSS POWER	124.7 hp	93 kw
DISPLACEMENT	274.6 cu in	4.5 L
ASPIRATION	turbocharged	
Operational		
OPERATING WEIGHT	34400 lb	15603.6 kg
FUEL CAPACITY	38 gal	144 L
HYDRAULIC SYSTEM FLUID CAPACITY	57 gal	215.7 L
OPERATING VOLTAGE	12 V	
ALTERNATOR SUPPLIED AMPERAGE	65 amps	
DRAWBAR PULL	20000 lb	9071.8 kg
TIRE SIZE	14.00x24 12PR	
Transmission		
TYPE	ZF WG98 powershift	
NUMBER OF FORWARD GEARS	4	
NUMBER OF REVERSE GEARS	3	
MAX SPEED - FORWARD	19.9 mph	32 km/h
Hydraulic		
PUMP TYPE	load sensing piston pump	
Lift		
MAX LIFT CAPACITY	10000 lb	4535.9 kg

MAX LIFT HEIGHT	55.1 ft in	16800 mm
MAX LOAD AT MAX HEIGHT	5000 lb	2268 kg
MAX FORWARD REACH	42 ft in	12800 mm
MAX LOAD AT MAX REACH	3000 lb	1360.8 kg
Dimensions		
LENGTH TO FORK FACE	20 ft in	6090 mm
WIDTH OVER TIRES	8.4 ft in	2560 mm
OVERALL HEIGHT	8.4 ft in	2560 mm
WHEELBASE	12 ft in	3650 mm
GROUND CLEARANCE	18 ft in	457 mm
TURNING RADIUS OUTSIDE TIRES	14 ft in	4270 mm

Viewing Photo 1 of 5

© 2007-2018 RitchieSpecs Equipment Specifications Ritchie Bros. Auctioneers © | Terms of Use | Privacy Statement
OEM specifications are provided for base units. Actual equipment might vary with options.

Santa Clara Valley Transportation Authority

Solutions that move you

VTA CONSTRUCTION ACCESS PERMIT APPLICATION

SUBMIT APPLICATION PACKAGE TO:
Santa Clara Valley Transportation Authority (VTA)
Finance & Budget, Permits & Utility Locating Services
3331 N. First Street, Bldg. A
San Jose, California 95134-1906 (408) 321-5856

VTA Office use ONLY
Plan Check Number: _____ SION #: _____ Permit # _____

Permit Applicant (Applicant): SCVWD

Address: 5750 Almaden Expressway

City: San Jose State: CA Zip: 95118

Contact Person: Youhan Lee Title: Associate Civil Engineer

Phone #: 408-630-3121 Fax #: _____

E-Mail Address: ylee@valleywater.org

Emergency Contact Person: Youhan Lee 24/HR Emergency Phone #: 408-348-0868

Work being performed for:

Company/Agency Name: SCVWD Address: 5750 Almaden Expressway

City: San Jose State: CA Zip: 95118

Contact Person: Youhan Lee Phone #: 408-630-3121

E-Mail Address: ylee@valleywater.org General Contractor's CA License Number: _____

Work being performed by: (List General Contractor and all Subcontractors – see attached Exhibit "A")

Company Name: _____ Address: _____

City: _____ State: _____ Zip: _____

Contact Person: _____ Phone #: _____

E-Mail Address: _____ General Contractor's CA License Number: _____

Project Location: Lower Calera Creek West End Headwall

Start Date: 5/1/2019 Completion Date: 6/30/2019

Estimate the number of work days (only include work days subject to this CAP):

Regular Work Days: 15 Overtime/Weekend or Holiday Days: 0

TERMS AND CONDITIONS OF VTA CONSTRUCTION ACCESS PERMIT

I. THE FOLLOWING ITEMS OR CONDITIONS ARE REQUIRED FOR ALL PERMIT APPLICATIONS:

a. All Applicants must adhere to the attached background security screening process and have a Background Security Check (BSC) clearance/badge prior to issuance of a VTA permit. This requirement does not apply to governmental agencies and permits limited to bus pad restoration (see attached Exhibit "B").

b. To initiate the permit process, complete, sign, and submit this Application Form with the permit application fee. The final permit fee will be determined after review and approval of the application and/or plans. Make payment by cash or check payable to Valley Transportation Authority. For further information regarding permit fees, call (408) 321-5856. The Applicant agrees to reimburse VTA for all actual and direct costs expended by VTA, including costs to process this application and inspect the permit work.

c. The Applicant shall provide a detailed description of the work to be performed. The Applicant's description of the work, at a minimum, must include the items listed below. If the Applicant wishes to include additional information, please enclose additional sheet(s).

1.Type of project: Lower Calera Creek Flood Protection Project is to protect residents from 1% flood. Structures to construct includes floodwalls, levees, maintenance road and sidewalk improvement. The total cost of the Lower Calera Creek Project is about $15 millions.

2. Distance from the nearest tracks: 35 feet

3.Contractor schedule: 2 years

4.Cost of project within the CAP envelope: $50,000.

5.Impact on VTA operations (if known): Temporary relocation of the VTA bus stop on Arizona Avenue.

6.Work plan: Work includes demolishing existing concrete headwall and then constructing new (6-ft taller) headwall with footing. Detailed work plan will be provided when Contractor is on board.

7. Type of equipment to be used: jackhammer, heavy-duty hauler, backhoe loaders, concrete truck

8. Other Information: _____

Attach:
☐ Traffic Control Plan
☐ Work Zone Diagram

d. For construction projects, attach one (1) electronic copy of the Plans and Specifications. All plans submitted to VTA must include the Assessor parcel number, VTA property lines, tracks, stations, facilities, and all known underground utilities.

e. ☐ YES ☒ NO - Do you have a cooperative or other agreement with VTA concerning this project? If yes, please provide a copy of the agreement with your application.

f. All Applicants must adhere to Section V., Insurance Requirements.

II. THE FOLLOWING ITEMS OR CONDITIONS ARE REQUIRED WHEN APPLICABLE:

a. All workers, working on or working within 10 feet of any VTA light rail property, are required to complete VTA's Railroad Worker Protection and Safety training class prior to beginning any work on the project. Call VTA's Light Rail Technical Training Center at (408) 952-6800 for further information.
b. Workers may also be required to complete a Heavy Rail Safety Training Class when working within, or near, tracks owned/operated by Caltrain, Union Pacific Railroad (UPRR), or Bay Area Rapid Transit (BART) (collectively referred to as Agencies). Each Agency conducts its own training. For further information, call **(1)** Caltrain at (408) 300-3108; **(2)** UPRR (402) 544-8722; and **(3)** BART at (510) 464-6676.
c. The Applicant is responsible for notifying Agencies and obtaining encroachment permits, according to the respective Agencies' guidelines.
d. The Applicant is responsible for arranging and paying for all costs for railroad flagmen/watchmen.
e. Submission to and approval by VTA of a Traffic Control Plan.
f. A copy of the General Contractor's State of California Contractor's License must be submitted for all construction work.
g. Applicants wishing to install a utility or a facility on property owned by VTA must submit a copy of a document, such as a license, lease, or easement that allows Applicant to enter, construct, install, maintain, or operate upon VTA property. If no such document exists, Applicant should contact VTA Real Estate, at (408) 321-5777 to initiate this process.
h. As stated in Government Code 4216.9. (a): "No permit to excavate …shall be valid unless the applicant has been provided with an initial inquiry identification number…" Applicant or its General Contractor shall notify VTA's Permit & Utility Services Unit of the **USA Ticket Number** prior to start of work.
i. BART may require a separate permit, if the work will affect, or is within, property located within Bart's Operating Easement within VTA property.

III. RAIL LINE POWER SHUT DOWN:

a. ☐ YES ☒ NO - In your opinion, will this job require the shutdown of power to either VTA Light Rail Overhead Catenary System (OCS) or BART Third Rail?
b. A separate BART permit may be required, when work will affect, or is within, Bart's Operating Easement located within VTA property.
c. If VTA or BART determines that a power shutdown is required, any actual costs incurred will be borne by Applicant or its General Contractor.
d. Each Agency will make an assessment to determine if a power shutdown is required.

IV. BUS STOP AND/OR SERVICE INTERRUPTION:

a. ☒ YES ☐ NO - Will this project require a Bus Stop and/or Service Interruption?
If yes:
1. Contact the VTA General Bus Stop Hotline at (408) 321-5800 or bus.stop@vta.org.
2. Provide the estimated number of work days: : 2 days-1 day to relocate, 1 day to replace bus stop

b. VTA will make an assessment to determine if a Bus Stop and/or Service Interruption is required.

V. INSURANCE REQUIREMENTS:

a. Prior to final approval of the CAP, the Applicant must provide VTA with an ACORD certificate evidencing insurance coverages that fully comply with the attached Insurance and Indemnity Requirements (see attached Exhibit "C"). Applicant expressly agrees to the indemnity provisions of the Insurance and Indemnity Requirements in Exhibit "C". All public agencies that are self-insured must provide satisfactory evidence of self-insurance prior to issuance of the permit.

b. In addition, all Applicants must complete and submit the attached Railroad Protective Liability application, attached as Exhibit "D". Any construction work within 50 feet in any direction from any

railroad, or within 50 feet in any direction from any VTA OCS, requires the Applicant to apply for enrollment in VTA's Railroad Protective Liability program via Exhibit "D". All questions on the VTA questionnaire are mandatory. If not accepted by VTA, the Applicant must procure Railroad Protective Liability Insurance at its own expense, showing VTA as a Named Insured. If VTA deems the General Contractor's project to be hazardous, then VTA may require, at its sole discretion, that Railroad Protective limits be $5,000,000 per occurrence, $10,000,000 annual aggregate. Rates for the VTA program are as follows in the table below. VTA will collect Federal surplus lines taxes of 4% and State surplus lines taxes of 3% in addition to the amounts shown.

RAILROAD PROTECTIVE LIABILITY INSURANCE FOR CAPS		
Description	Rate	Insurance Limits
Non VTA Projects & Entry Permits: up to 10 calendar days in a 60 day period, total job cost $50,000 or less	$300 flat fee (includes 7.2% surplus lines tax)	$2,000,000 per occurrence; $6,000,000 annual aggregate
Non VTA Projects & Entry Permits more than 10 calendar days, longer than 60 day duration, greater than $50,000 job cost (minimum premium charge $1,000)	$0.30 per $100 of contract value located within 50 feet of rail plus surplus lines tax of 7.2%	$2,000,000 per occurrence; $6,000,000 annual aggregate
Non-VTA Projects deemed hazardous by VTA (quoted on per project basis)	$0.45 per $100 of contract value within 50 feet of rail plus surplus lines tax of 7.2%	$5,000,000 per occurrence; $10,000,000 annual aggregate

Permit FAQ's:

1. **What is the current version of the VTA Policy?** VTA Permit Policy, dated October 7, 2004, Document Number, CO-PL-0001, Version Number 02, as amended.
2. **When is a Construction Access Permit (CAP) Required**? A CAP is required prior to commencing any underground, overhead, or surface work that **(1)** is located within VTA properties or facilities; **(2)** is located within 10 feet of any rail that is part of VTA's Light Rail System, including the OCS; and **(3)** has the potential of affecting VTA property, services or assets.
3. **When is a Restricted Access Permit (RAP) Required**? A RAP may be required when workers, or their equipment, have the potential of or are actually working within 10 feet of the Light Rail Tracks/System, over/under any OSC, or other VTA rail.
4. **Whom do I call for more information about a CAP?** Call VTA Permits Office at (408) 321-5856.
5. **Whom do I call for more information about a RAP?** Call (408) 546-7608 for further information.
6. **How long does the permit evaluation process take?** The permit evaluation process usually takes 7–14 working days from the date that all permit application requirements are completed and received by VTA.

By signing this application form, the Applicant agrees to all of the terms and conditions contained herein and to any provisions set forth in the CAP.

Authorized Signature: Youhan Lee Date: 6/11/2018

Print Name: Youhan Lee Phone #: 408-630-3121

Exhibit "A"
List of General Contractor and all Subcontractors

Work being performed by:

General Contractor

Company Name: _____ Address: _____

City: _____ State: _____ Zip: _____

Contact Person: _____ Phone #: _____

E-Mail Address: _____ Contractor's CA License Number: _____

1. Subcontractor

Company Name: _____ Address: _____

City: _____ State: _____ Zip: _____

Contact Person: _____ Phone #: _____

E-Mail Address: _____ Contractor's CA License Number: _____

2. Subcontractor

Company Name: _____ Address: _____

City: _____ State: _____ Zip: _____

Contact Person: _____ Phone #: _____

E-Mail Address: _____ Contractor's CA License Number: _____

3. Subcontractor

Company Name: _____ Address: _____

City: _____ State: _____ Zip: _____

Contact Person: _____ Phone #: _____

E-Mail Address: _____ Contractor's CA License Number: _____

4. Subcontractor

Company Name: _____ Address: _____

City: _____ State: _____ Zip: _____

Contact Person: _____ Phone #: _____

E-Mail Address: _____ Contractor's CA License Number: _____

5. Subcontractor

Company Name: _____ Address: _____

City: _____ State: _____ Zip: _____

Contact Person: _____ Phone #: _____

E-Mail Address: _____ Contractor's CA License Number: _____

6. Subcontractor

Company Name: _____ Address: _____

City: _____ State: _____ Zip: _____

Contact Person: _____ Phone #: _____

E-Mail Address: _____ Contractor's CA License Number: _____

Exhibit "B"
VTA Background Security Check Program

Santa Clara Valley Transportation Authority (VTA) is committed to providing a safe and secure workplace for all Employees, Permittees and Permittee's employees and subcontractors. This commitment is extended to all that may or may not work under the authorization of a VTA Construction Access Permit (CAP) or Restricted Access Permit (RAP). In an effort to better protect VTA interests and ensure that all Permittees and their employees and subcontractors accessing or working at VTA properties/facilities/systems are in a safe and secure environment, VTA has adopted a Background Security Check Program (BSC) that will require the following:

- Criminal and Identity background screening
- VTA authorized access badge with photo that must be displayed on the work site

Effective August 1, 2010, Applicants that apply for VTA permits to perform work or other activities authorized by VTA CAPs or RAPs are required to comply with the BSC program standards. Applicants and their employees and subcontractors can be denied access to or near VTA properties/facilities/systems if they have one or more of the following:

1. A felony conviction within the last 7 years or a misdemeanor conviction within 1 year;
2. An active warrant;
3. A falsification or failure to disclose any and all related information;
4. On parole, probation or other court required supervision; or
5. Registered sex, narcotics or arson offender.

This BSC program will be administered by iproveit.com, referred to hereafter as the Investigator. To initiate the BSC Program, please contact Iproveit at (678) 775-6720. Their website is as follows: www.iproveit.com. A one-time enrollment fee will be required.

These standards have been set for those Permittees and their employees and subcontractors who will be allowed to access or encroach upon VTA's properties/facilities/systems and/or near the VTA's properties/facilities/systems to perform permit work. VTA reserves the right, at its sole discretion, to bar any person from accessing, encroaching upon or working on or near VTA properties/facilities/systems.

All charges incurred in the use of the Investigator services are solely the responsibility of the respective Permittee. Background investigations that a Permittee may have secured outside of this BSC program from companies other than the Investigator are not applicable to VTA's BSC program. Your dealings with regard to the services of the Investigator will be directly with the Investigator and not with VTA.

Permittees and any of their employees and subcontractors who are not in compliance with the VTA BSC program will be denied access to work on a VTA CAP or RAP or on any VTA properties/facilities/systems.

If you have any questions concerning the above, contact the VTA Permits Office at (408) 321-5856.

Exhibit "C"
Construction Access Permits - Insurance Requirements
Endorsement Schedule

General Liability:
- Additional Insured Ongoing Operations (equivalent to CG 20 10 10 01)
- Additional Insured Completed Operations (equivalent to CG 20 37 10 01)
- Primary & Non-Contributory
- Separation of Insureds (Severability of Interest)
- Waiver of Subrogation
- Railroad Liabilities (CG 24 17) – required if any work or services will be performed within 50 feet of VTA rail right of way

Auto Liability:
- Additional Insured
- Primary & Non-Contributory
- Separation of Insureds (Severability of Interest)
- Waiver of Subrogation

Worker's Comp:
- Waiver of Subrogation

Pollution Liability:
- Waiver of Subrogation

Contractual Indemnity Clause:

(a) The Applicant shall indemnify and hold harmless VTA, its board members, officers, agents, employees, and consultants (collectively, the "Indemnitees") from any claims, liabilities, losses, injuries, damages, expenses, fines, penalties, liens, stop notices, or fees and costs (including attorneys' and experts' fees and costs) arising out of, pertaining to, or caused by, or in any way relating to the Work, including the performance of this Contract or any subcontract hereunder, by the Applicant and/or its agents, employees, or subcontractors, whether such claims, liabilities, losses, injuries, damages, expenses, fines, penalties, liens, stop notices, or fees and costs (including attorneys' and experts' fees and costs) are based upon a contract, or for personal injury, death or property damage or upon any other legal or equitable theory whatsoever. Notwithstanding the foregoing, the Applicant is not obliged to indemnify and/or hold harmless the Indemnitees from any claims, liabilities, losses, injuries, damages, expenses, fines, penalties, liens, stop notices, or fees and costs (including attorneys' and experts' fees and costs) arising from the sole or active negligence or willful misconduct of VTA or its agents, servants or independent contractors who are directly responsible to VTA, or from damages for defects in designs furnished by those persons.

(b) The Applicant agrees, at its own expense, and upon written request by VTA or any individual Indemnitee, to immediately defend any suit, action, claim, or demand brought against any Indemnitee founded upon, alleging, or implicating any claims, liabilities, losses, injuries, damages, expenses, fines, penalties, liens, stop notices, or fees and costs (including attorneys' and experts' fees and costs) covered by the Applicant's indemnity obligation set forth above in subparagraph (a) immediately above and regardless of whether the Applicant and/or any of its agents, employees, or subcontractors, was, in fact, liable. In the event a court of competent jurisdiction determines that any suit, action, claim, or demand brought against any Indemnitee was caused by the sole or active negligence or willful misconduct by VTA or its agents, servants or independent contractors who are directly responsible to VTA, VTA shall promptly reimburse the Applicant for costs of defending the Indemnitees in such action incurred by the Applicant, but only in proportion to the sole or active negligence or willful misconduct of VTA or its agents, servants or independent contractors who are directly responsible to VTA.

(c) This indemnity and defense of claims provision will survive the expiration or termination of the Permit and remain in full force and effect.

Exhibit "D"
Railroad Protective Liability Application

Policy Term January 1, 2017 - January 1, 2018
Blanket Program Enrollment Questionnaire

CAP ID #: _____

1. Name & Address of General Contractor: Will supply when Contractor is on board.

_____

2. Name & address of project owner for whom work is being done: SCVWD

5750 Almaden Expressway, San Jose, CA 95118

3. Physical description and location of work being performed. Attach diagram of work being performed within 50 feet of rail ROW.

Location: at Lower Calera Creek U-fram channel west end wall. Work is to demolish existing concrete headwall

the replace headwall with taller concrete headwall with a footing. Please see plan set, drawings S-43 and S-44.

4. Anticipated start date 5/1/2019 4a. Total # of work days on site: 15
5. Anticipated completion date: 6/30/2019

6. Total Contract Value: 15 millions

7. Total cost within 50 feet of rail right of way: $50,000.

8. If any movement of track, please describe: No

8a. Number of trains passing through jobsite per day: _____
9. Confirm VTA is an Additional Insured on General Contractor's policies: Yes x No __
10. Confirm VTA is held harmless in contract? Yes x No __
11. Confirm the contractual exclusion for work within 50 feet of a RR has been removed from General Contractor's general liability, automobile and umbrella insurance: Yes ___ No ___
12. Please attach project scope of services, and General Contractor's certificate of insurance, with the following endorsements: GL and Auto Additional Insured; GL Railroad CG 24 17; Waiver of Subrogation for all lines; Primary & Noncontributory for all lines; Separation of Insureds for all lines; Umbrella or Excess Drop Down endorsement

For VTA Internal Use Only:

Confirm VTA is additional insured on General Contractor's policies: Yes _____ No _____

Confirm VTA is held harmless in contract: Yes _____ No _____

Confirm the contractual exclusion for work within 50 feet of a RR has been removed from General Contractor's general liability, automobile and umbrella insurance: Yes _____ No _____

Construction Access Permit

SANTA CLARA
Valley Transportation Authority

Construction Division, Permits and Utility Locating Services --3331 N. First Street, Bldg. B -- San Jose Ca. 95134

Name: Santa Clara Valley Water Dist.
Address: 5750 Almaden Expressway
San Jose Ca. 95118-3686
Office Phone: (408) 630-3121
FAX:
Job Phone:

Contact Person: Youhan Lee
Title:
Email: ylee@valleywater.org
Emergency Contact Person:
Emergency Phone:

Date Issued:

Date Expires:

Location of Work:

Lower Calera Creek West End Headwall (CAP #4)

Description of Work:

CAP #4 Lower Calera Creek Flood Protection Project (floodwalls, levees, maintenance road and sidewalk improvement)

Permit Number
DRAFT

Start Date:
Completion Date:
Issued By:
Title:
Permit Extended to:
Extended By:
Date Completed :
By Inspector:
Comments:

INSPECTION REQUIRED

CALL 321-5856 48 HOURS BEFORE STARTING ANY WORK

THIS PERMIT MUST BE AVAILABLE FOR INSPECTION AT ALL TIMES

CALL USA BEFORE YOU DIG (1-800) 227-2600

Construction Access Permit

Permit Number: DRAFT

Special Conditions

01. Permittee and its subcontractor shall notify Permits & Utility Locating Services (P&ULS), Mark Knollmueller, at (408) 321-5891 or (408) 464-7737 - 48 hours before starting work. If no answer, call the P&ULS main line at (408) 321-5856.

Permittee and its subcontractor shall notify Permits & Utility Locating Services (P&ULS), Paul Garrett, at (408) 321-5776 or (408) 640-7640 - 48 hours before starting work. If no answer, call the P&ULS main line at (408) 321-5856.

02. Permittee and all workers shall follow the attached Santa Clara Valley Transportation Authority's General Conditions.

03. ????????RPLI PROGRAM (SCVWD or Contr to provide proof of RPLI, if not, fee incurred and S.C. as follow?????????????????
RPLI Notification Requirements:
Notice to Proceed:
Permittee shall notify VTA of Permittee's Notice to Proceed/Extension date. Permittee's failure to provide notification to VTA may result in both non-coverage under VTA's blanket RPLI program and in liability from any resulting incident/accident.
Notice of Completion:
Permittee shall provide VTA of the Notice of Completion. Failure to do so could result in additional RPLI fees. Fees may be incurred if the scope of work extends beyond the RPLI estimate/date.
Notification shall be made to:
o Risk Management, Judith Harteau (Judith.Harteau@vta.org),
o Risk Mangement, Michael Escobar (Michael.Escobar@vta.org), and
o Permits, Permits@vta.org.

04. The Permittee agrees that the initial permit fee charged is VTA's estimate ONLY. Any additional work, other inspection, As-Built, etc., that exceed the fee estimate shall warrant additional charges that shall be borne and paid promptly by the Permittee in accordance with the VTA Permit Policy, Section 4.1.2 Fees.

05. Permittee shall perform Survey Work and prepare CAD As-Built Drawing(s).

06. Permittee and all workers shall comply with the provisions of the National Pollutant Discharge Elimination System (NPDES) Industrial General Permit No. CAS000001 for Discharges of Storm Water Associated with Industrial Activities and Phase II Small MS4's (Municipal Separate Storm Sewer System) NPDES General Permit No. CAS000004 for Storm Water Discharges from Small MS4's.
All construction activities shall include, and the Permittee shall utilize current Best Management Practices (BMP's) from the California Storm Water Quality Association's (CASQA's) web site www.casqa.com. BMP's shall prevent to the maximum extent practicable sediment or other construction-related pollutants from being discharged from the site, into storm drains, or, into the Waters of the United States.
Upon VTA request, Permittee shall submit a plan showing where and how erosion and sediment control BMP's will be utilized to assure compliance with this Permit Condition.
Contractor shall comply with the provisions of the NPDES Industrial General Permit No. CAS000001 for Discharges of Storm Water Associated With Industrial Activities and Phase II Small MS4 NPDES General Permit No. CAS000004 for Storm Water Discharges From Small MS4's (Municipal Separate Storm Sewer).

07. All construction activities shall include, and the Contractor shall utilize current BMP's from the CASQA's web site www.casqa.com. BMP's shall prevent to the maximum extent practicable

INSPECTION REQUIRED

CALL 321-5856 48 HOURS BEFORE STARTING ANY WORK

THIS PERMIT MUST BE AVAILABLE FOR INSPECTION AT ALL TIMES

CALL USA BEFORE YOU DIG (1-800) 227-2600

Construction Access Permit

Permit Number: DRAFT

Special Conditions

sediment or other construction-related pollutants from being discharged from the site, into storm drains, or, into the Waters of the United States.
Upon VTA request, Contractor shall submit a plan showing where and how erosion and sediment control BMP's will be utilized to assure compliance with this Permit Condition.

08. The As-Built drawing fee of $3,880.00 may be reimbursed to the Permitee if the Permitee submits an As-Built Drawing satisfactory to VTA Standards and the Construction Inspector approves the As-Built within 30 Calendar Days following completion of the permitted construction work.

09. SCVWD pending providing SSWP. Per Donahue & O'Hair "Depending on type of equipment to be used, flaggers may be required, work hours may be limited, etc."

10. Government issued photo ID must be worn and presented upon request when working on or near Valley Transportation Authority (VTA) property and/or right-of-way. The Contractor is responsible for collecting and destroying badge after expiration date. If found please return to: VTA, P&ULS, 3331 North 1st Street, Bldg A, San Jose, CA 95134.

11. A separate BART permit may be required, coordinate with Gary Anderson at (510) 464-6676.

12. BART will determine if a power shutdown is required, any actual costs incurred will be borne by Permittee or its General Contractor.

INSPECTION REQUIRED

CALL 321-5856 48 HOURS BEFORE STARTING ANY WORK

THIS PERMIT MUST BE AVAILABLE FOR INSPECTION AT ALL TIMES

CALL USA BEFORE YOU DIG (1-800) 227-2600

THIS PAGE INTENTIONALLY LEFT BLANK

CITY OF MILPITAS – ENGINEERING DEPARTMENT
455 E. CALAVERAS BLVD, MILPITAS, CA 95035

ENCROACHMENT PERMIT APPLICATION

(Please complete all fields and type "N/A" if not applicable. All fields shall be typed or printed clearly.)

PERMITTEE INFORMATION	OFFICE USE ONLY	
1. PERMITTEE NAME:	PERMIT NO.	PRIVATE JOB ACCOUNT #:
2. CONTACT PERSON:	ISSUE DATE:	EXPIRATION DATE:
3. MAILING ADDRESS: CITY: STATE: ZIP CODE:		
4. PHONE NUMBER:	5. EMAIL ADRESS:	

CONTRACTOR INFORMATION		
4. CONTRACTOR NAME	5. STATE LICENSE # AND CLASSIFICATION: EXP. DATE:	6. CITY BUSINESS LICENSE #: EXP. DATE:
7. MAILING ADDRESS: CITY: STATE: ZIP CODE:		
8. CONTACT PERSON:	10. EMAIL:	11. PHONE NUMBER:

DESCRIPTION OF WORK

22. LOCATION OF THE PROPOSED WORK (SHALL BE CONSISTENT WITH THE PLAN):

23. FULL DESCRIPTION OF THE PROPOSED WORK IN THE PUBLIC RIGHT-OF-WAY OR PUBLIC EASEMENT:

24. IS THIS PERMIT ASSOCIATED WITH ANY EXISTING PROJECT/PERMIT?
☐ NO ☐ YES (IF 'YES', COMPLETE BOX NO. 25.)

25. ASSOCIATED WITH EXISTING PROJECT/PERMIT #:

26. ATTACHED DOCUMENTS:
- ☐ CERTIFICATE OF INSURANCE/ENDORSEMENTS
- ☐ CONSTRUCTION PLANS
- ☐ TRAFFIC CONTROL PLANS
- ☐ PRIVATE JOB ACCOUNT PROCESSING FORM
- ☐ PERMIT FEE DEPOSIT CHECK
- ☐ ENCROACHMENT AGREEMENT (For Telecommunications or Fiber Optic)
- ☐ OTHERS:

27. OFFICE USE ONLY - ADDITIONAL DOCUMENTS
- ☐ IMPRPOVEMENT AGREEMENT
- ☐ AGREEMENT SERCURITY:
  - ☐ Surety Bonds
  - ☐ Cash Deposit
  - ☐ Certificate of Deposit
  - ☐ Company Checks
  - Security Amount: $ _____

I have read the permit conditions with general provisions and any special provisions herein and as part of this Encroachment Permit Application and shall comply with them.

Permittee Name and Title _____ Signature _____ Date _____

PERMIT APPROVAL (OFFICE USE ONLY)

PERMISSION IS HEREBY GRANTED to the above-named Permittee for the ENCROACHMENT specified herein on the application, subject to the conditions listed on the reverse side of this application, plus the following SPECIAL PROVISIONS:

1. Pre-construction meeting is required? ☐ YES ☐ NO
2. Public notification is required? ☐ YES ☐ NO
3. Digital Copy of the Record Drawing is required? ☐ YES ☐ NO

Permit Issued by: Name and Title _____ Signature _____ Date _____

PROJECT COMPLETTION (FOR INSPECTOR ONLY)

INSPECTOR'S COMMENTS:	ADDITIONAL NOTES:

Accepted by: Project Inspector Name _____ Signature _____ Date _____

ENCROACHMENT PERMIT CONDITIONS

INSPECTIONS: PERMITTEE SHALL VISIT WEBSITE https://app.acuityscheduling.com/schedule.php?owner=18287911 OR CALL (408) 586-2797 TO SCHEDULE INSPECTION AT LEAST 48 HRS PRIOR TO ANY WORK.

USA: PERMITTEE SHALL CALL UNDERGROUND SERVICE ALERT AT 1-800-227-2600 48 HRS PRIOR TO ANY WORK.

GENERAL PROVISIONS:

In consideration of the granting of this permit and other good and valuable consideration, the undersigned and the heirs, executors, administrators and assigns of the undersigned, agree that permittee shall be responsible for all liability imposed by law for personal injury or property damage proximately caused by failure on permittee's part to perform his/her obligations under this permit in respect to maintenance. If any claim of such liability is made against the City of Milpitas, its officers, employees, or agents, permittee shall defend, indemnify and hold them, and each of them harmless from such claim. Nothing herein is intended to impose any different or higher standards or care than that required from by law. Permittee agrees to the following:

1. Permittee shall comply with City latest Standard Details and Specifications published on the City's website.
2. Permittee shall comply with City approved improvement plans as attached.
3. Permittee shall comply with City approved traffic control plans as attached and the California Manual on Uniform Traffic Control Devices (California MUTCD).
4. Permittee shall maintain a copy of this permit at job site at all times.
5. Work hours shall be limited to 7 a.m. to 5 p.m., Monday-Friday, unless otherwise approved by the City Engineer.
6. The encroachment shall not obstruct access to any water meter or any other City facility.
7. Any misrepresentation of information on this form provided by the permittee shall make the permit null and void.
8. Permittee shall remove the encroachment at its own expense when required in writing by the City.
9. The City has the right to remove the encroachment without compensation to the permitee for any City purposes.
10. The City is not responsible for any repair or maintenance of this encroachment for any reason.
11. **Existing Facilities Replacement**: Any existing facilities damaged or removed shall be replaced in kind or better.
12. **Roadway Replacement**: The permittee shall replace existing roadway structural pavement section in accordance with City of Milpitas Standard Drawing No. 222 as applicable. Temporary surfacing shall be inspected daily by the contractor and repaired within 48 hours, where there is 1" uplift or settlement. Temporary surfacing shall not be used for more than two weeks and shall be removed prior to final pavement placement.
13. **Trench Backfill**: Trench backfill shall be in conformance with City of Milpitas Standard Drawing No. 220 or 222 as applicable.
14. **Pipe and Conduits**: Utility services and other conduit shall be bored or jacked under existing pavement unless specified otherwise on approved plans.
15. **Non-point Pollution Prevention**: The applicant is responsible to exercise Best Management Practices under this permit. The Best Management Practices sheet is attached and made a part of this permit. This sheet is not all-inclusive and it is the sole responsibility of the applicant to insure proper Best Management Practices to eliminate storm water pollution.
16. **Monumentation:** Contractor is responsible for preservation and/or perpetuation of all existing monuments which control subdivisions, tracts, boundaries, streets, highways, easements, or other right -of-way, easements, or provide survey control which will be disturbed or removed due to contractor's work. Contractor shall provide a minimum of 10 working-day notice to project engineer/surveyor prior to disturbance or removal of existing monuments. Project engineer/surveyor shall coordinate with contractor to reset monuments or provide permanent witness monuments and file the required documentation with the County Surveyor pursuant to Business and Professional Code section 8771.
17. **Temporary Construction:** Water based paint shall be used for all temporary markings on concrete or asphaltic pavement or other structures. All temporary markings and construction items shall be completely removed by the Contractor when they are no longer required and prior to final inspection.
18. **Cable Franchise:** By accepting this permit, the applicant/owner agrees on behalf of itself and its affiliates that it will not provide video programming (including but not limited to programming delivered using internet protocol) over its facilities located within the City's rights-of-way to subscribers within the City without first obtaining a cable franchise or an open video system franchise from the City.

APPENDIX D

Best Management Practices for Pathogen Control

1. Control and Oversight of Pesticide Use (Valley Water)
2. Pesticide Products Approved for District Use (Valley Water)
3. General Construction – BMP for Pathogen Control
4. BMP: Draft Plant Pathogen Control for Planting at Field Sites

THIS PAGE INTENTIONALLY LEFT BLANK

Downloaded or printed copies are for reference only. Verify this is the current version prior to use. See the District website for released version

1. PURPOSE AND SCOPE

This defines District policies and procedures for pesticide approval, purchasing, acquisition, handling, use, storage, transportation, disposal, and reporting in a manner consistent with all Districts' permits, the California Environmental Quality Act (CEQA), and the California Department of Pesticide Regulation. These policies and procedures do not replace the need for regulatory permits and only apply to District work activities once these permits are in place.

These policies and procedures apply to all District-owned or operated facilities and staff, contractors, permittees, and suppliers. The District goal is to minimize the environmental risk and exposure resulting from its pesticide use by employing Best Management Practices (BMPs) and alternatives to their use to the maximum extent practicable and to facilitate the safe use of pesticide by qualified staff and contractors.

2. POLICY

1. Only pesticides included on W751D01 Pesticides Products Approved for District Use (Product List) are allowed to be used, in the appropriate categories for product application on District facilities.

   1.1. District staff is prohibited from purchasing over the counter pesticides.

   1.2. The product lists will be updated, as needed, by the Pesticide Review Team to ensure compliance with these practices.

   1.3. All pesticide products not on the approved list that are desired to be used on District facilities (by employees, contractors, or permittees) will need first to be reviewed and approved by the Pesticide Review Team (PRT) prior to their use in accordance with Section 8 of this document and be verified as being in accordance with any relevant regulatory agency review.

2. **State-certified Qualified Applicator** (see definition in Section 4) with the appropriate current certification categories must be onsite for entire application of all pesticides.

3. Products listed on the State Department of Pesticide Regulation (DPR) "A" list of known groundwater contaminants will not be used. Detailed information on DPR regulations can be found on their web site at http://www.cdpr.ca.gov/docs/legbills/calcode/040101.htm#a6800

   Only Category III and IV pesticides will be used for projects.

4. To minimize the use of pesticides in the work place, pesticides derived from non-toxic natural ingredients should be used as repellants when appropriate.

5. Insecticides are used after other methods, such as prevention or natural nontoxic control methods, have been shown to be ineffective in similar situations. Where use is needed, the product with the lowest toxicity is used in accordance with the manufacturer's label.

6. Herbicides are used only when alternatives use such as mowing, hand removal or grazing have been shown to be ineffective or inefficient to meet the needs and requirements of this program.

   6.1. No herbicide shall be used by District staff without a written recommendation from a Pest Control Advisor in accordance with State Department of Pesticide Regulation (DPR) www.cdpr.ca.gov

7. Pesticides containing the following are prohibited without exception:

Downloaded or printed copies are for reference only. Verify this is the current version prior to use. See the District website for released version

7.1. Copper based products on or around any body of water.
7.2. Organophosphate or Carbamate products.

3. REFERENCE DOCUMENTS

External Reference Documents

REFERENCE DOCUMENT	DOCUMENT LOCATION(S)
State Department of Pesticide Regulation (DPR)	www.cdpr.ca.gov http://www.cdpr.ca.gov/docs/dept/quicklinks/compliance/lawsregs.htm
State Department of Pesticide Regulation (DPR) - pesticides that are known to cause groundwater contamination	http://www.cdpr.ca.gov/docs/legbills/calcode/040101.htm#a6800
State Department of Pesticide Regulation (DPR) - Keeping Pesticides Out Of Floodwaters – Container Labeling	http://www.cdpr.ca.gov/docs/pressrls/1998/980213.htm
California Environmental Quality Act (CEQA)	http://resources.ca.gov/ceqa/
California Food and Agricultural Code for Non-Production Agricultural Use	http://www.cdfa.ca.gov/phpps/LBAMeir/CH%207_Public%20Svcs%20&%20Haz%20Resp.pdf
State Department of Fish and Game Code relative to stream alterations	http://www.dfg.ca.gov/habcon/1600/
Environmental Protection Agency regulations	http://www.epa.gov/pesticides/regulating/laws.htm http://www.epa.gov/pesticides/regulating/containers.htm
Spill Cleanup on The Pesticide Environmental Stewardship (PES) website supported by Center for Integrated Pest Management	http://pesticidestewardship.org/spill/Pages/SpillCleanup.aspx

Internal Reference Documents

REFERENCE DOCUMENT	DOCUMENT LOCATION(S)
Q520D01 Environmental Management System Environmental Planning	District QEMS
Q741D03 Procurement of General Services	District QEMS
Q830D01 HAZMAT Emergency Response Procedures	District QEMS
W751M01 Best Management Practices (BMP) Handbook	District QEMS
W640D07 Contractor Safety Program	District QEMS
W640D36 Chemical Purchasing	District QEMS
W640D23 Personal Protective Equipment	District QEMS
W751D01 Pesticides Products Approved for District Use	District QEMS
F751D01 Pest Control Recommendation & Spray Operators Report	District QEMS
WQ75101 Field Operations Work Order Process	District QEMS - Watersheds
WQ75103 Review of Community Projects	District QEMS - Watersheds
Pesticide Safety Training Record	Process Owner Files

Downloaded or printed copies are for reference only. Verify this is the current version prior to use. See the District website for released version

REFERENCE DOCUMENT	DOCUMENT LOCATION(S)
SMP BMPs (Modified by Permit Conditions)	
National Pollutant Discharge Elimination System (NPDES) permit requirements	
Countywide Urban Runoff permit requirements	

4. DEFINITIONS

Integrated Pest Management – Integrated pest management (IPM), is a process that is used at the Santa Clara Valley Water District (District) to solve pest problems through a combination of techniques such as biological control, cultural controls, mechanical and physical controls, and chemical control while minimizing risks to people and the environment. IPM is practiced at the District to manage a variety of pests such as algae, weeds insects and rodents.

Permitting – The process to acquire regulatory permits from state and federal agencies that have legal jurisdiction with the application of pesticides. Permitting and receiving permits allows the District to legally apply pesticides per the directives in the permits. An environmental planner needs to be engaged to discuss the potential permitting issues.

Pest Control Advisor (PCA) – As defined by the State of California, the Pest Control Advisor is an individual who meets the minimum educational requirements to qualify for examination and who passes the State examination in the categories relative to the area of pesticide work for which they will be making written recommendations for pesticide use. Categories relative to this policy include: Insects, Mites and Other Invertebrates, Vertebrate Pests and Weeds. The licensed Pest Control Advisor is the authority making written recommendations for pesticide use.

Pest Control Operator (PCO) – The Pest Control Operator possesses a valid Qualified Applicator License from the State of California, supervises the pesticide application (restricted use and/or general use) made by a licensed pest control business, and is responsible for the safe and legal operation of that business relative to pesticide use.

Pesticide – A product formulated specifically for the purpose of controlling pests. The generic term "pesticide" refers to a broad spectrum of products, including herbicides, insecticides, algaecide, rodenticides, etc. The following pesticides are used by the District:

- **Algaecide** – Algae control in percolation ponds.
-
- **Herbicides** – Control of weeds and undesirable vegetation to minimize fire hazards, control invasive species, maintains flow conveyance of waterways, maintain access to District facilities and complies with State and Federal requirements.
- **Insecticides** – Control of insects in and around District buildings or worksites, or in the case of a serious pest outbreak.

Downloaded or printed copies are for reference only. Verify this is the current version prior to use. See the District website for released version

Pesticide Review Team (PRT) –is a committee consisting of the following functional roles: District PCA, Environmental Health & Safety Specialist, Stream Maintenance Program Biologist, Senior Chemist, and Facilities Maintenance Administrator.

Product Lists – W751D01 Pesticides Products Approved for District Use approved by Pesticide Review Team.

Qualified Applicator – As defined by the State of California is an individual who has passed the State examination for application of various pesticide products and is certified to do so. A Qualified Applicator must be certified in the appropriate certification categories to perform the pesticide application. Categories relative to this policy include: Landscape Maintenance, Right of Way, Aquatic, and Residential, Industrial and Institutional.

Toxicity – The Environmental Protection Agency and the State Department of Pesticide Regulation define pesticides in the following categories:

- **Category I** – highest pesticide toxicity, or poses specific health hazards such as a severe eye hazard.
  - Signal Word(s) - ***Danger/Poison; Skull & Crossbones***
- **Category II** – Moderate toxicity pesticides 1-10 times less toxic than Category I.
  - Signal word ***- Warning***
- **Categories III and IV** – least toxic, 1-10 times less toxic than Category II, and Category IV is considered practically non-toxic.
  - Signal word – **Caution**

Toxicity – OSHA's Hazard Communication Standard has created global benchmarks to facilitate consistency in designation of hazards in pesticides and across manufacturers and countries. Pesticides remain under the jurisdiction of the EPA.

- More severe health hazard
  - Signal Word(s) - ***Danger; Torso - carcinogen; Skull & Crossbones – Fatal or toxic***
- Less severe health hazard
  - Signal Word(s) – ***Warning; Harmful - respiratory, skin, eye irritant, narcotic effect; Exclamation mark***

5. ROLES AND RESPONSIBILITIES

District's Pest Control Adviser (PCA): Is responsible for coordinating, reviewing, tracking, documenting and reporting pest control practices at the District. Additionally, the PCA provides updates on policy changes and modifications to all District staff. The PCA works with the Watersheds Environmental Health and Safety Specialist on the aspects of employee training. This role is filled by the Integrated Vegetation Manager and the Vegetation Program Specialist II's in the Vegetation Field Operations Unit.

Pesticide Policy Process Owner: Is responsible for resolving any issues with related pesticide use that could not be resolved by working with the PRT and Management. This role is filled by the Integrated Vegetation Manager.

Downloaded or printed copies are for reference only. Verify this is the current version prior to use. See the District website for released version

Pesticide Review Team (PRT): The purpose of this operational team is to oversee compliance to the pesticide program. The team will also be responsible for meeting on an as needed basis to determine the following:

- Evaluating the District's pesticide use.
- Revision, as needed, of the Pesticides Products Approved for District Use list.
- Responding to issues relative to the use of pesticides.
- Recommending changes to the pesticide program including training and procedures.
- Reviewing, evaluating, and approving the use of new products including those to be used by contractors and permittees. These approvals do not override the legal requirements for CEQA compliance.
- Researching alternatives to pesticides using staff and consultant services.

Unit Manager of Units with Oversight of the Use of Pesticides - these units include, but are not limited to: Vegetation Field Operations Unit and Facilities Management Unit.

- Provide training on pesticide use, SDS labeling, and BMPs relating to pesticide use.
- Maintaining original training records in accordance with District Record Retention Policy.

Unit Manager with Oversight of Pesticide Contractors – these units include: Vegetation Field Operations Unit, and Facilities Management Unit are responsible for

- Ensuring that any contracts involving pesticides comply with this document and contain all project specific requests, restrictions, and BMPs for limitation on pesticide use prior to signing contract.
- Ensuring that any contractors using pesticides have immediate oversight by a State-Certified Qualified Applicator.
- Oversight of the pesticide contractor from the time the contract is in effect to the end of the contract service.
- Training contractors on District BMPs, District Environmental Management System including Policy and aspects, Pesticide Policies (this document), and W751D01 Pesticide Products Approved for District Use.
- Acquiring the appropriate approvals, permits, any environmental reviews, biological surveys, and clearances before beginning work.
- Providing a report after the use of pesticides back to the Integrated Vegetation Manager with the exact names of pesticides applied and the amounts used.

Qualified Applicator* – Is responsible for:

- Being certified by the State of California with the appropriate certification categories (see definition, section 4).
- Annual training of District BMPs, Pesticide Policies (this document), and W751D01 Pesticide Products Approved for District Use.
- Must be onsite for entire application "immediate oversight" of all pesticide use.
- Responsible for the storage, handling, transportation, labeling, disposal, and clean-up of spills per State Department of Pesticide Regulation, District standards, and Hazardous Materials regulations.
- Posting on the project site and notifying the appropriate parties of the pesticide use.
- Completing a Spray Operators Report (F751D01) or equivalent on Maximo work order daily for each pesticide application and then submitting to the appropriate review body by the applicable due dates.

Downloaded or printed copies are for reference only. Verify this is the current version prior to use. See the District website for released version

*The following classifications in Unit 295 are required to be Qualified Applicators:

- Maintenance Worker Series (MW I, II, III, Senior)
- Field Construction Supervisors
- Vegetation Program Specialists I, II
- Integrated Vegetation Manager

Integrated Vegetation Manager:

- Is the Pesticide Policy Process Owner.
- Is responsible for resolving any issues with related pesticide use that could not be resolved by working with the PRT and Management.
- Is responsible for monthly reporting to the Agricultural Commissioner.

6. REQUIREMENTS

6.1 ISO Requirements

- **ISO 9001 Quality Management System Requirements**
  - 7.5.1 Control of Production and Service Provision
- **ISO 14001 Environmental Management System**
  - 4.4.6 Operational Control

6.2 Other Requirements

- California Environmental Quality Act (CEQA) and other applicable Federal and State Regulations.
- Board Governance Policies and Executive Limitations.
- Best Management Practices of the various environmental documents covering the District's work on streams, water utility facilities, buildings, and grounds.

7. MONITORING AND MEASUREMENT

The Pesticide Review Team will review and report on this process annually.

8. PROCEDURE

ACTION STATEMENT & ROLE	DETAILS (DESCRIBE STEPS)	QUALITY RECORDS (OUTPUT FROM STEP)
(1) Review of Pesticide Use (Pesticide Review Team)	• The Team will meet as-needed to: o Evaluate the District's pesticide use. o Revise, as needed, the W751D01 Pesticide Products Approved for District Use list. o Respond to requests to add pesticides to W751D01 Pesticide Products Approved for District Use list. o Respond to issues relative to the use of pesticides. o Recommend changes to the pesticide program including training and procedures. o Review, evaluate, and approve the use of new products including those to be used by contractors and permittees. o Research alternatives to pesticides.	W751D01 Pesticide Products Approved for District Use

Downloaded or printed copies are for reference only. Verify this is the current version prior to use. See the District website for released version

ACTION STATEMENT & ROLE	DETAILS (DESCRIBE STEPS)	QUALITY RECORDS (OUTPUT FROM STEP)
	• W751D01 Pesticide Products Approved for District Use will be released in accordance with Q423D01 District Document Control Process o Release announcement will be sent to all District Staff.	
(2) Purchase of Pesticides (District Staff)	• District Staff is prohibited from purchasing pesticides over the counter, as these are designated for home use only • See W751D01 Pesticide Products Approved for District Use for acquiring pesticides • If a pesticide is not listed on W751D01 Pesticide Products Approved for District Use, a request may be made to the PRT o Send the request through Access Valley Water to PCA. o PCA will review the request and forward to PRT. o Requestor will be notified of decision.	Request using Access Valley Water
(3) Certification Requirements for Using Pesticides (District Staff, Contractors, Permittees)	• All applicable District staff, contractors, and permittees shall provide proof of State Certification performing pesticide applications. • As defined by the State of California, **State-certified Qualified Applicator** is an individual who has passed the State examination for application of various pesticide categories and is certified to do so. Categories relative to this policy include: Landscape Maintenance, Right of Way, Aquatic, and Residential, Industrial and Institutional. • Any pesticide use by District Staff, contractors, or permittees in the course of District business must be done with immediate oversight by a **State-certified Qualified Applicator with the appropriate certification categories**. o Only pesticides listed on W751D01 Pesticide Products Approved for District Use list can be used. •	Contractors and Permittee Proof of State Certification
(4) Pesticide Use with Permits, Agreements, or Licenses (Community Review Projects Unit (CPRU))	• Permits, agreements, and licenses will be issued by CPRU in accordance with WQ75103 Review of Community Projects. CPRU will work with Vegetation Field Operations Unit on any pesticide request. o Any pesticide use by District Staff, contractors, or permittees in the course of District business must be done with immediate oversight by a **State-certified Qualified Applicator with the appropriate certification categories**. • Only pesticides listed on W751D01 Pesticide Products Approved for District Use list can be used.	

Downloaded or printed copies are for reference only. Verify this is the current version prior to use. See the District website for released version

ACTION STATEMENT & ROLE	DETAILS (DESCRIBE STEPS)	QUALITY RECORDS (OUTPUT FROM STEP)
	• If a pesticide is not listed on W751D01 Pesticide Products Approved for District Use, CPRU can make a request to add the product to the PRT by sending the request to the PCA using Access Valley Water.	
(5) Training Requirements for Using Pesticides (Unit Managers of units who use or oversee the use of Pesticides)	• All Unit Managers of units who use or oversee the use of pesticides will provide trainings on pesticide, SDS labeling, and BMPs for any staff that use or oversee the use of pesticide in the course of their duties. o Optionally, Unit Managers can contract Process Owner for training or alternatives. • The training shall include: o Review of laws and regulations. o Updates on new products. o Pesticide Policies (this document). o W751D01 Pesticide Products Approved for District Use. o Review of proper procedures for use and handling. o Review of W640D23 Personal Protective Equipment. o Review of impacts of pesticides on the environment. o Label/SDS training – Proper reading and use. o Impacts of pesticides on the environment. o Updates on project-specific operating procedures and BMPs. o Process for identifying and responding to potential secondary impacts (carcass discovery). o Proper emergency response procedure for accidental ingesting or spilling of pesticides. • The Unit Manager providing the training is responsible for maintaining the original training records.	Staff Training Records
(6) Contractor Pesticide Use (i.e. landscape, rodent control) (Unit Manager requesting contracting services)	• The selection of contractors who use pesticides in the course of the contract will be in accordance with Q741D03 Procurement of General Services, W640D07 Contractor Safety Program, and this document. • RFP package includes the requirement that only **State-certified Qualified Applicator** with the appropriate current certification categories will provide immediate oversight for application of all pesticides. • Per Q741D03 Procurement of General Services, Procurement will verify the contractor is a **State-certified Qualified Applicator** with the appropriate current certification categories will provide immediate oversight for application of all pesticides to be used within the contract. • Unit Manager requesting the pesticide contracting services is responsible for:	

Downloaded or printed copies are for reference only. Verify this is the current version prior to use. See the District website for released version

ACTION STATEMENT & ROLE	DETAILS (DESCRIBE STEPS)	QUALITY RECORDS (OUTPUT FROM STEP)
	o Oversight of the contract from the time the contract is in effect to the end of the contract service. o Training the contractor on: • The District's environmental policy, environmental management system, and the environmental aspects of the activities. • District BMP's. • Pesticide Policies (this document). • W751D01 Pesticide Products Approved for District Use. • Safety training, see W640D07 Contractor Safety Program. o Acquiring the appropriate approvals, permits, any environmental reviews, biological surveys, and clearances before beginning work. o Providing an after use report with the exact pesticides used and amounts back the Integrated Vegetation Manager within a week of application. This is necessary for tracking District pesticide use.	Contractor Training Records
(7) Processing Pesticide Use Recommendations for Internal Use (Pest Control Adviser (PCA))	• Staff pesticide requests are initiated, entered, and tracked in Maximo in accordance with WQ75101 Field Operations Work Order Process. • The request will be evaluated for: o Any questions or issues will be resolved by the Pesticide Review Team. o Environmental clearances and permits must be obtained, as required. o Biological Survey and clearance must be obtained before proceeding with application of pesticides, when required by permit or regulation. o BMPs must be followed. • A proposed use is evaluated based on: o Regulatory restrictions including CEQA and BMPs. o Anticipated effectiveness of the proposed methods. o Public health aspects. o Long and short term environmental impacts. o Financial cost. o Consistency with other District's policies. • All herbicide use by District staff require a written recommendation from the PCA in accordance with State Department of Pesticide Regulation (DPR) www.cdpr.ca.gov • PCA develops a written Pest Control Recommendation (F751D01) for use in accordance with requirements of the California Food and Agricultural Code and forwards	F751D01 Pest Control Recommendation & Spray Operators Report

Downloaded or printed copies are for reference only. Verify this is the current version prior to use. See the District website for released version

ACTION STATEMENT & ROLE	DETAILS (DESCRIBE STEPS)	QUALITY RECORDS (OUTPUT FROM STEP)
	the request and recommendation to the Qualified Applicator. • The Qualified Applicator reviews the request and recommendation and completes the work.	
(8) Handling, Labeling, Storage, Disposal, Transportation, and Spills of Pesticides (Qualified Applicator)	• **Handling.** Mixing and loading should never be done without a full understanding of the pesticide label and with the use of all recommended personal protective equipment (PPEs-See W640D23 Personal Protective Equipment) The label will identify the dangers involved and the precautions to follow, may indicate the signs and symptoms of poisoning and recommend first aid practices, should one be exposed to the product. o Pesticide handling includes the following activities: • Mixing, loading transferring, applying or assisting with an application of pesticides, • Servicing, repairing or handling contaminated equipment, • Incorporating pesticides into soil or entering treated area during an application. • **Labeling**. Containers containing pesticides will be labeled according to State Department of Pesticide Regulation (DPR) - Keeping Pesticides Out of Floodwaters – Container Labeling: http://www.cdpr.ca.gov/docs/pressrls/1998/980213.htm o Each pesticide service container must be labeled with 1. Pesticide name. 2. Signal word (Danger/Poison, Warning, or Caution). 3. Who the container belongs to (SCVWD). • **Storage.** Pesticides must be stored according to the properties set forth in the SDS. See http://www.epa.gov/pesticides/regulating/containers.htm This includes: o Pesticides must be stored in labeled containers. o Pesticides should be stored in a designated storage room that has secondary containment on earthquake secured shelves. o Pesticides should not be stored in a location that would expose them to direct sunlight. o **Disposal** of unused pesticides and associated containers will be handled in compliance with hazardous waste regulations o **Transportation** of Pesticides -	

Downloaded or printed copies are for reference only. Verify this is the current version prior to use. See the District website for released version

ACTION STATEMENT & ROLE	DETAILS (DESCRIBE STEPS)	QUALITY RECORDS (OUTPUT FROM STEP)
	o Never carry pesticides in the passenger compartment of any vehicle. o All pesticides containers should be secured in the cargo area of the vehicle. o Do not leave pesticides unattended in a vehicle unless they are inside a locked compartment. o A current inventory of all pesticides, along with SDS's for each pesticide to be transported, should be available. o **Spills**. Any spilled pesticide will be cleaned up in accordance with Spill Cleanup on The Pesticide Environmental Stewardship (PES) website supported by Center for Integrated Pest Management (http://pesticidestewardship.org/spill/Pages/SpillCleanup.aspx) and Q830D01 HAZMAT Emergency Response Procedures.	

Downloaded or printed copies are for reference only. Verify this is the current version prior to use. See the District website for released version

(9) Posting, Notification, and Application of Pesticides
 	
(Qualified Applicator)
	• Posting of areas where pesticides are used shall be performed in compliance with this policy as follows:
	  • Posting shall be performed in compliance with the label requirements of the product being applied.
	  • In addition, the District shall provide posting for **any** products applied in areas used by the public for recreational purposes, or those areas readily accessible to the public, regardless of whether the label requires such notification. In doing this, the District ensures that exposure risk is minimized by adopting practices that go beyond the product label requirements.
	  • Sign postings shall include the date and time of application, the product's active ingredients, common name, and the time of allowable re-entry into the treated area. A District staff contact phone number shall be posted on the sign.
	  • Signs shall not be removed until after the end of the specified re-entry interval.
	  • Right-to-know literature on the product shall be made available upon request to anyone in the area of the application.	

	• The District maintains records of neighbors with specific needs relative to notification prior to treatment of an adjacent area to ensure such needs are accommodated. These records are maintained in Maximo with the pest control recommendation.	Pest Control Recommendation & Spray Operators Report

	• A Spray Operators Report (F751D01) or equivalent on Maximo work order daily shall be completed for each pesticide application performed by District staff. This report shall be submitted with each daily work order in accordance with WQ75101 Field Operations Work Order Process and include:
	  • Pesticide common name and active ingredient.
	  • Method of application.
	  • Dilution rate, if applicable.
	  • Total amount of product applied, **plus** the total amount of diluted material.
	  • For outdoor applications, weather conditions, including temperature and wind speed.
	  • Specific pests controlled with each application.	

	• Unit Managers overseeing pesticide contractors must supply a monthly use report with the exact pesticides used and amounts (Spray Operators Report) to the Integrated Vegetation Manager by the 5th day of the following month. This is necessary for tracking all pesticide use on District facilities. The contractor's use report is an internal document only and will not be submitted to the Agricultural Commissioner.	Pesticide Contractor's Spray Operators Report

ACTION STATEMENT & ROLE	DETAILS (DESCRIBE STEPS)	QUALITY RECORDS (OUTPUT FROM STEP)
	• Contractor is responsible for submitting their monthly use report to the Agricultural commissioner in accordance with the State Certification requirements.	
(10)Reporting (Integrated Vegetation Manager)	• A report will be run monthly from Maximo listing the total amount of products used for pest control including the common name. • This listing will be submitted to the Agricultural commissioner no later than the 10th day of each month.	Maximo Report Report send to Agricultural Commissioner

9. QUALITY RECORDS

QUALITY RECORD	LOCATION KEPT	FILING ORDER	RECORDS RETENTION SCHEDULE SERIES NO.	COMMENTS
Pesticide Products Approved for District Use List	District Document Control	Document ID	RS-0226	
Maximo Database Record (including reports)	Network Server	Work Order Number	RS-0052	
Pest Control Recommendation & Report	Work Order	Facility Number & Date	RS-0221	
Report send to Agricultural Commissioner	Process Owner Files	Date	RS-0026	
Original Training Records	Process Owner Files	Date	RS-0076	

10. CHANGE HISTORY

Date	Revision	Comments
02/10/10	A	Initial release into QEMS, effective 1/27/10. Supersedes Administrative Policy and Procedure Ad-8.2 Pesticide Use. This document was sent to be reviewed by: Bill Smith; Geoffrey Weigand; David Matthews; Marc Klemencic; Liang Lee; Mike Martin; Debra Caldon; Mike Cresap; Melanie Richardson (Maryann O'Brien); Ann Draper; Chris Elias; Jim Fiedler; Michael Hamer; Frank Maitski; and Neddal Ali-Adeeb.
04/29/11	B	Major rewrite of document. Document was sent for the first stakeholder review in September 2010 and a second stakeholder review in December 2010. Comments were provided by Michael Sanchez; Jennifer Castillo; David Dunlap; Joe Chavez; Jim Crowley; Jamie McLeod; David Matthews; Bill Smith; Kenneth McKenzie; John Chapman, Sunny Williams, Lisa Porcella, and Nina Merrill. A meeting with held with Larry Lopez, Geoffrey Weigand, Mike Cresap; and Tom Spada to collect comments. Stakeholder comments have been responded to and incorporated into the document where appropriate.
09/21/11	C	Minor editorial changes: incorporated W640D23 Personal Protective Equipment in Procedure Steps 5 and 9 and added a link to Spill Cleanup.
09/13/12	D	Minor editorial changes: added definition of IPM, corrections of spelling and language.
12/23/15	D	Minor editorial change: clarified roles and responsibilities of classifications in Unit 295 and requirements for Licensing and Certifications in the Unit

Downloaded or printed copies are for reference only. Verify this is the current version prior to use. See the District website for released version

Date	Revision	Comments
12/18/18	E	Minor editorial change: clarified roles and responsibilities of classifications in Unit 295 and requirements.

11. ADDENDA

None

Downloaded or printed copies are for reference only. Verify this is the current version prior to use. See the District website for released version.

Trade Name	Common Name	Pesticide Type	Target	Label	SDS
Rodeo®	Glyphosate	Post-emergent Herbicide	Non-selective	http://www.cdms.net/LDat/ld4TN013.pdf	http://www.cdms.net/LDat/mp4TN006.pdf
Roundup Pro® Concentrate	Glyphosate	Post-emergent Herbicide	Non-selective	http://www.cdms.net/LDat/ld5EH017.pdf	http://www.cdms.net/LDat/mp5EH006.pdf
Habitat®	Imazapyr	Post-emergent Herbicide	Aquatic	http://www.cdms.net/LDat/ld6H2005.pdf	http://www.cdms.net/LDat/mp6H2006.pdf
Gallery® 75 Dry	Isoxaben	Pre-emergent Herbicide	Broadleaf	http://www.cdms.net/LDat/ld638008.pdf	http://www.cdms.net/LDat/mp638003.pdf
Garlon® 4	Triclopyr	Post-emergent Herbicide	Broadleaf	http://www.cdms.net/LDat/ld0B0001.pdf	https://www.nwmissouri.edu/naturalsciences/sds/g/Garlon%204.pdf
Transline®	Clopyralid	Post-emergent Herbicide	Broadleaf	http://www.cdms.net/LDat/ld0BB011.pdf	http://www.cdms.net/LDat/mp0BB008.pdf
Dimension® Ultra 40WP	Dithiopyr	Pre-emergent Herbicide	Non-selective Broadleaf/ grasses	http://www.cdms.net/LDat/ld5T1003.pdf	http://www.cdms.net/LDat/mp5T1000.pdf
Competitor®	Dialkyl Polyoxyethylene Glycol	Surfactant		http://www.cdms.net/LDat/ld6G2004.pdf	http://www.cdms.net/LDat/mp6G2003.pdf
Nature's Blend®	Sodium Nitrate	Probiotic	Aquatic vegetation	https://naturalake.com/wp-content/uploads/2018/09/natures-blend.pdf	https://naturalake.com/wp-content/uploads/2018/04/Natures-Blend-SDS.pdf
Blue Lagoon® SS	Disodium salt	Dye	Aquatic vegetation	http://horizon.wiki/images/5/55/Brandt_Blue_Lagoon_SS_Label.pdf	https://brandt.co/media/2809/brandt-blue-lagoon-ss-sds.pdf
MD Pellets®	Probiotic	Probiotic pellet	Muck	https://naturalake.com/product/md-pellets/	http://www.solitudelakemanagement.com/hubfs/AquaFix_MD-Pellets-SDS.pdf
Capstone®	Aminopyralid	Post-emergent	Broadleaf	http://www.cdms.net/ldat/ldA8Q004.pdf	http://www.cdms.net/ldat/mpA8Q002.pdf
Maxforce® FC Magnum*	Roach Killer Bait Gel	Insecticide	Cockroaches	https://www.environmentalscience.bayer.us/-/media/PRFUnitedStates/Documents/Resource-Library/Product-Labels/Maxforce-FC-Magnum-Roach-Killer-Bait-Gel.ashx	https://www.environmentalscience.bayer.us/-/media/PRFUnitedStates/Documents/Resource-Library/SDS/maxforce_fc_magnum_roach_killer_bait_gel.ashx
Maxforce® FC*	Ant Killer Bait Gel	Insecticide	Ants	https://www.environmentalscience.bayer.us/-/media/PRFUnitedStates/Documents/Resource-Library/Product-Labels/Maxforce-FC-Professional-Insect-Control-Ant-Killer-Bait-Gel.ashx	https://www.environmentalscience.bayer.us/-/media/PRFUnitedStates/Documents/Resource-Library/SDS/Maxforce_FC_Ant_Killer_Bait_Gel.ashx
Repel* Lemon Eucalyptus	Lemon eucalyptus oil	Insecticide	Ticks	https://www3.epa.gov/pesticides/chem_search/ppls/000305-00062-20160323.pdf	http://consumerchoice.green/downloads/SDS/Repel_Lemon_Eucalyptus_MSDS-305-62-July10.pdf

Downloaded or printed copies are for reference only. Verify this is the current version prior to use. See the District website for released version.

Essentria*	Peppermint oil	Insecticide	Wasp & Hornet	https://www.zoecon.com/-/media/files/zoecon-na/us/product%20labels/specimen/essentria%20wasp%20hornet%20spray%20specimen%20label.pdf	https://www.zoecon.com/-/media/files/zoecon-na/us/product%20labels/sds/essentria%20wasp%20hornet%20spray%20sds.pdf

* Products used by contractors

Note: Other products might be used if approved by the Pesticide Review Team. See Q751D02 Control and Oversight of Pesticide Use

General Construction - BMP for Pathogen Control

Construction practices must minimize the spread of plant pathogens that could be present in vehicles, construction equipment and tools, and work shoes. Standard operating procedures would include the following:

a. Vehicles should stay on established roads whenever possible.
b. Lower maintenance roads upstream of tidally influenced areas should be avoided during the wet season (generally October 15th - April 30th) or when the road is wet enough that soil will stick to vehicle tires and undercarriages.
c. The exterior and interior of all vehicles, construction equipment, and tools should be clean and free of debris, soil and mud (including mud on tires, treads, wheel wells and undercarriage) prior to arrival at a new job site.
d. Work shoes should be kept clean by inspecting shoe soles and removing mud, debris and soil off treads before moving to a new job site.

THIS PAGE INTENTIONALLY LEFT BLANK

BMP: Plant Pathogen Control for Planting at Field Sites

Objective: To avoid contaminating restoration sites with exotic pathogenic *Phytophthora* species or other plant pathogens during activities related to planting.

Definitions:

- Planting area: area where plant material is being planted, typically for habitat restoration, erosion control, or other purposes. Plant material may include nursery stock that has been produced under SCVWD Nursery Contract Specifications, vegetative propagules such as cuttings or divisions, or seed.
- Planting site: an individual planting basin or other spot, typically no larger than one square yard, where an individual plant or several grouped plants will be installed.
- Nursery stock: refers to container nursery stock that was produced under clean propagation conditions described in the SCVWD Nursery Contract Specifications and has passed any required testing. Such material is assumed to be free of exotic *Phytophthora* to the maximum degree attainable.
- Job site: The boundary of the job site will be determined by SCVWD for each planting site. Typically, the job site includes the planting area, staging areas, parking areas, and access roads within and leading to these areas

Overview: Three general routes for the spread of *Phytophthora* and other soilborne plant pathogens are addressed in these BMPs. These routes include (I) contamination of planting inputs, including clean nursery stock and other materials installed at the site, (II) introduction of pathogens to a planting area, and (III) potential movement of undetected contamination within the planting area.

I. Prevent contamination of clean nursery stock or other clean plant materials.

Planting materials shall be protected from potential contamination from the point that materials leave the production nursery or collection site until materials they have been planted. Note that container nursery stock has a high risk of infection by *Phytophthora* species if exposed to these pathogenic agents. Exclusion of these pathogens provides the only viable option for maintaining nursery plants free of *Phytophthora*.

1. Nursery plants shall be transported on or in vehicles or equipment that has been sanitized before loading the stock. Truck beds, racks, or other surfaces will be cleaned (swept, blown with compressed air and/or power washed as needed) to be free of soil and plant detritus. Cleaned surfaces shall be sanitized by (a) spraying with 70% ethyl or isopropyl alcohol, (b) rinsing with diluted bleach (at least 0.525% NaOCl) or (c) rinsing with a quaternary ammonium solution used at the concentration and exposure time described on the product label. See “Approved procedures” in the SCVWD Nursery Contract Specifications for further information about sanitizing tools and surfaces.

2. Delivered nursery plants that will be held before planting shall be transferred to cleaned and sanitized raised benches and maintained as described in the SCVWD Nursery Contract Specifications (see provisions 16-56 and others if applicable).
3. At the job site, plants shall be handled to prevent contamination until delivered to each planting site. Nursery stock shall not be staged on the soil or other potentially contaminated surfaces except that plants may be placed on the soil surface at their specific planting sites.
4. Keep plants in sanitized vehicles or on sanitized carts, trailers, etc. until delivered to their planting sites if possible.
5. If it is necessary to offload plants at the job site, plants may be placed on clean waterproof plastic tarps or other clean, sanitized surfaces. If tarps are used for holding plants, one surface will be dedicated for contact with nursery stock and will be cleaned and sanitized as needed to maintain phytosanitary conditions.
6. On-site or off-site collection of plant materials including seed and cuttings shall be conducted as described under "Clean planting materials" (provisions 1-9) in the SCVWD Nursery Contract Specifications.
7. Washing, soaking, or irrigation of plant material shall be conducted using clean water sources as specified in SCVWD Nursery Contract Specifications 16-18. Untreated surface waters shall not be used for these purposes.
8. Mulch, compost, soil amendments, inoculants and other organic products shall be pre-approved for use before delivery to the planting site. Materials shall be free of pathogen contamination due to composition, manufacturing conditions, or through effective heat treatment and subsequently handled and maintained in a manner to prevent contamination. If appropriate, testing may be required as specified by SCVWD. At the job site, delivered materials shall be handled to prevent contamination until delivered to each planting site in the same manner specified for plant material (bullet # I.3, I.4, I.5 above).
9. All other materials to be installed at the site shall be of new material that has not been stored in contact with soil or other potentially contaminated materials. This includes irrigation supplies (such as pipe, fittings, valves, drip line, emitters, etc.), erosion control fabrics, fencing, stakes, posts, and other planting site inputs.

II. Prevent contamination of planting area by infested soil or plant debris from other locations.
Phytophthora contamination can be present in agricultural and landscaped areas, in commercial nursery stock, and in some infested native or restored habitat areas. Contamination can be spread via soil, plant material and debris, and water from infested areas. Practices are based on the SCVWD's approved BMP for Plant Pathogen Control at Contaminated Sites and Sensitive Sites, with additions specific to planting operations:

Prior to entry at a planting area

1. Vehicles, equipment and large tools must be thoroughly cleaned before arriving at the planting area.

a. Compliance with this provision is achieved by demonstrating that the vehicle or equipment has been cleaned at a commercial vehicle or appropriate truck washing facility.
b. Equipment must be free of soil and debris on tires, wheel wells, vehicle undercarriages, and other surfaces. (A high pressure washer and/or compressed air may be used to ensure that soil and debris are completely removed).
c. The interior of equipment (cabs, etc.) must be free of mud, soil, gravel and other debris (interiors may be vacuumed or washed).

2. Foot wear and small tools must be thoroughly cleaned before arriving at the planting area. This includes hand-held garden hoses, hose nozzles, quick couplers and irrigation wands.

   a. Shoe soles must be free of debris and soil. (Water, a stiff brush, screwdriver or similar tool can be used to remove soil from shoe treads).
   b. Once soil or debris have been removed, an appropriate sanitizing agent of ethyl or isopropyl alcohol (at least 70% concentration) must be used to kill pathogen spores which may be present on boot soles or tools (sanitizing agent may be applied by using spray bottles filled with alcohol to thoroughly wet the surface). Boot soles and hand tools must be sprayed with enough alcohol that surfaces are fully coated and wet. (Brushes and other implements used to help remove soil will be cleaned with alcohol after use.)

3. At the start of each work day at the job site, worker clothing shall be clean (laundered) and free of mud, soil or detritus.
4. Gloves must be new (if disposable) or laundered / sanitized at the start of each work day. Non-disposable gloves should be made of or coated with material such as nitrile that can be sanitized with alcohol.
5. Vehicles should stay on established roads whenever possible.
6. Travel on unpaved roads should be avoided when such roads are wet enough that soil will stick to vehicle tires and undercarriages.

III. Prevent potential spread of contamination within planting areas.

Planting operations have the potential to quickly spread *Phytophthora* contamination throughout an entire planting area. Good working practices shall be followed at the job site to minimize the likelihood that undetected contamination will be spread. It is not possible to guarantee that every portion of a planting area is free of *Phytophthora* contamination. Areas with higher risk of contamination include areas adjacent to planted landscaping, areas with existing or recently removed woody vegetation, and areas directly along watercourses. Areas with low risk of contamination include those with only grassy vegetation or where surface soils have been removed. SCVWD may designate specific portions of a planting area as having high or low risk of contamination.

1. Before entering the job site, field workers shall receive training that includes information on *Phytophthora* diseases and how to prevent the spread of these and other soil borne pathogens

by following approved phytosanitary procedures. Contractors shall provide documentation that such training has been provided.

2. Conduct planting operations under conditions that allow for adequate decontamination of equipment, tools, gloves, and shoes. Unless absolutely necessary, avoid planting under wet conditions or when soil is muddy.
3. Phase work to minimize movement between areas with high and low risk of contamination. Where possible, complete work in low risk areas before moving to higher risk areas. Alternatively, restrict personnel to working in either high or low risk areas exclusively to reduce the need for decontamination.
4. Minimize unnecessary movement of soil and plant material within the planting area, especially movement from higher risk to lower risk areas.
5. Clean soil and plant debris from large equipment and sanitize hand tools, buckets, gloves, and footwear when moving from higher risk to lower risk areas or when moving between spatially separated portions of the planting area.
6. Brush off substantial soil contamination from tools, and gloves when moving between successive planting sites to prevent repeated collection and deposition of soil across multiple sites.
7. Avoid contaminating clothing with soil during planting operations. Use nonporous kneeling pads that are cleaned between planting sites if kneeling is necessary.
8. When possible, plant nursery stock from a given block in the same local area rather than spreading it widely. If a problem is associated with a given block of plants, it will be easier to detect and deal with it if the plants are spatially grouped.
9. All other materials to be installed at the site (irrigation equipment, erosion control fabric, fencing, etc.) shall be handled to prevent movement of soil within the site, especially movement from higher risk to lower risk areas. Materials should be kept free of soil contamination by maintaining them in sanitized vehicles or on sanitized carts, trailers, etc., or stockpiling in elevated dry areas on clean tarps until used.

DRAFT

APPENDIX E

Temporary Construction Easements

1. 4018-6.1 Permission to Enter Form
2. APN: 022-31-000 (DOCUMENT NO.: 4018-27. Document: 23447601)
3. APN: 022-31-020 (DOCUMENT NO.: 4018-29. Document: 24043236)

THIS PAGE INTENTIONALLY LEFT BLANK

Project:	Lower Calera Creek
Property Owner:	Milpitas Materials Co
Property APN:	022-02-014 and 022-02-023
Property Address:	1125 N. Main Street Milpitas, CA 95035
File No.:	4018-6.1
Permit No.:	4018-P ____

PERMISSION TO ENTER

The undersigned, hereinafter referred to as "Owner," hereby grants permission to Santa Clara Valley Water District, its officers, employees, agents, and contractors, hereinafter "Valley Water," to enter upon Owner's property located at 1125 N. Milpitas Blvd., Milpitas, CA, and commonly known as Assessor's Parcel Numbers 022-02-014 and 022-02-014, and more particularly described in EXHIBIT "A" attached hereto for the following purposes:

A. Place vibration monitoring device(s) onto Owner's property to measure vibrations during construction of the Lower Calera Creek Flood Protection Project. Vibration device(s) will be installed by Valley Water's contractor and may require periodic maintenance during the course of construction. Vibration device(s) will be removed upon completion of construction. Valley Water will coordinate mutually agreeable location(s) of vibration devices with Owner prior to placement.

<u>Permission is granted subject to the following conditions</u>:

1. Valley Water shall save and hold Owner harmless from liability for damage to persons or property occasioned by said use of the property by Valley Water.

2. Permission hereby granted is not to be construed as a grant of title or any interest in the real property affected.

3. The term of this permit shall begin upon date of execution by both parties and terminate at the conclusion of the construction work or by December 1, 2023.

4. Valley Water or its contractor shall give Owner's contact person, Mr. Val Fisher, 48 hours notice at the following daytime telephone number: 408 262-0656, prior to beginning any work at the property related to this agreement including periodic inspections.

IN WITNESS WHEREOF, the Owner has executed this Permission to Enter as follows.

Date: _____

Owner: Milpitas Materials Company

BY:_____

Title: _____

_____

Santa Clara Valley Water District

Date: _____

By: _____
Rechelle Blank, P.E.
Deputy Operating Officer
Watersheds Design & Construction Division

DOCUMENT: 23447601

Pages: 7

Fees.... + No Fees
Taxes...
Copies..
AMT PAID

RECORD WITHOUT FEE UNDER SECTION 6103
GOVERNMENT CODE OF THE STATE OF CALIFORI

REGINA ALCOMENDRAS
SANTA CLARA COUNTY RECORDER
Recorded at the request of
City

RDE # 002
9/29/2016
4:18 PM

AFTER RECORDING RETURN TO:
REAL ESTATE SERVICES UNIT
SANTA CLARA VALLEY WATER DISTRICT
5750 ALMADEN EXPRESSWAY
SAN JOSE, CALIFORNIA 95118

SPACE ABOVE THIS LINE FOR RECORDER'S USE

APN: 022-31-000

DOCUMENT NO.: 4018-27

TEMPORARY CONSTRUCTION EASEMENT

CITY OF MILPITAS, a municipal corporation hereinafter referred to as "Grantor," grants to the Santa Clara Valley Water District, a Special District, created by the California Legislature (District) hereinafter referred to as "Grantee," a temporary construction easement over, upon and across a portion of that real property in the City of Milpitas, County of Santa Clara, State of California, described as:

See Exhibit "A" attached hereto and made a part hereof.

This temporary construction easement is granted under the express conditions listed below:

1. Grantor represents and warrants that she/he is the owner of the property described in "Exhibit A" attached hereto and made a part hereof, and that Grantor has the exclusive right to grant the easement.

2. This easement is necessary for the purpose of constructing the Lower Berryessa Creek Project and related activities incident to construction. This temporary construction easement shall not be revoked and shall continue in full force and effect until such time the construction of the Lower Berryessa Creek Project has been completed at which time the temporary construction easement shall terminate.

3. Grantee agrees to use all reasonable efforts to keep the roadway covered by this easement open to traffic and to not interfere with residential occupants or construction activity of Grantor on site. Grantee will keep area covered by the easement clean and remove all debris related to its construction.

4. Grantee agrees to indemnify and hold harmless Grantor from and against any and all claims, damages, liabilities, costs or any expenses whatsoever, arising from or caused, directly or indirectly by the entry onto the property by Grantee or its agent's, employees, invitees, contractors and subcontractors.

Dated this 29 day of JUNE, , 2016

STEVE PANGELINAN, CHIEF OF POLICE for THOMAS C. WILLIAMS CITY MANAGER

ACKNOWLEDGMENT

A notary public or other officer completing this certificate verifies only the identity of the individual who signed the document to which this certificate is attached, and not the truthfulness, accuracy, or validity of that document.

State of California
County of SANTA CLARA)

On JUNE 29, 2016 before me, PAMELA JANE CARONONGAN, NOTARY PUBLIC
(insert name and title of the officer)

personally appeared STEVEN JOHN PANGELINAN,
who proved to me on the basis of satisfactory evidence to be the person~~(s)~~ whose name~~(s)~~ is~~/are~~ subscribed to the within instrument and acknowledged to me that he/~~she/they~~ executed the same in his/~~her/the~~ir authorized capacity~~(ies)~~, and that by his/~~her/their~~ signature~~(s)~~ on the instrument the person~~(s)~~, or the entity upon behalf of which the person~~(s)~~ acted, executed the instrument.

I certify under PENALTY OF PERJURY under the laws of the State of California that the foregoing paragraph is true and correct.

WITNESS my hand and official seal.

PAMELA JANE CARONONGAN
Commission # 2006757
Notary Public - California
Santa Clara County
My Comm. Expires Feb 9, 2017

Signature Pamela Jane Caronongan (Seal)

CERTIFICATE OF CONSENT AND ACCEPTANCE

This is to certify that the interest in real property conveyed by the attached Deed or Grant to the Santa Clara Valley Water District, also referred to herein as the Grantee, is hereby accepted by the undersigned duly authorized agent on behalf of the Board of Directors of said Santa Clara Valley Water District, pursuant to authority conferred by Resolution No. 14-79 of said Board of Directors adopted on the 9th day of September 2014, and the Grantee consents to recordation thereof by its said duly authorized agent.

Dated: September 26, 2016

Santa Clara Valley Water District

By: _____

Chief Executive Officer/Clerk of the Board of Directors
(Strike out inapplicable one)

EXHIBIT "A"

SANTA CLARA VALLEY WATER DISTRICT
5750 Almaden Expressway
San Jose, CA 95118

Original By:	SJ	Revised By:	RPC
Date:	02/29/2016	Revision Date:	04/20/2016
PROJECT:	CALERA CREEK	APN:	022-31-000
PROPERTY:	CITY OF MILPITAS	RESU File No.:	4018-27

ALL THAT CERTAIN REAL PROPERTY SITUATE IN THE CITY OF MILPITAS, COUNTY OF SANTA CLARA, STATE OF CALIFORNIA, BEING A PORTION OF JACKLIN ROAD AS SHOWN ON THAT CERTAIN RECORD OF SURVEY FILED IN BOOK 344 OF MAPS, AT PAGE 3, IN THE OFFICE OF THE RECORDER, COUNTY OF SANTA CLARA, STATE OF CALIFORNIA, MORE PARTICULARLY DESCRIBED AS FOLLOWS:

COMMENCING AT THE INTERSECTION OF THE WESTERLY LINE OF HANSON COURT, FORMERLY CALLED NORTH MAIN STREET, WITH THE WESTERLY PROLONGATION OF THE NORTHERLY LINE OF JACKLIN ROAD AS SHOWN ON THAT CERTAIN RECORD OF SURVEY FILED IN BOOK 344 OF MAPS, AT PAGE 3, SANTA CLARA COUNTY RECORDS;

THENCE ALONG SAID PROLONGATION OF THE NORTHERLY LINE OF JACKLIN ROAD, NORTH 86˚47'44" EAST 59.30 FEET TO THE POINT OF BEGINNING;

THENCE CONTINUING ALONG SAID NORTHERLY LINE OF JACKLIN ROAD, NORTH 86˚47'44" EAST 63.60 FEET TO A POINT ON THE NORTHERLY LINE OF JACKLIN ROAD;

THENCE LEAVING SAID NORTHERLY LINE OF JACKLIN ROAD, SOUTH 73˚09'15" WEST 123.46 FEET TO A POINT ON SAID WESTERLY LINE OF HANSON COURT;

THENCE ALONG SAID WESTERLY LINE OF HANSON COURT, NORTH 08˚56'29" WEST 15.14 FEET;

THENCE LEAVING SAID WESTERLY LINE OF HANSON COURT, NORTH 73˚09'15" EAST 59.57 FEET TO THE POINT OF BEGINNING.

CONTAINING 1,373 SQUARE FEET MORE OR LESS.

AS SHOWN UPON **EXHIBIT "B"**, ATTACHED HERETO AND MADE A PART HEREOF.

EXHIBIT "A"
(continued)

BASIS OF BEARING:
BEARINGS HEREIN ARE BASED ON AND IDENTICAL TO THE RECORD OF SURVEY RECORDED IN BOOK 344 OF MAPS, AT PAGE 3, SANTA CLARA COUNTY RECORDS.

SURVEYOR'S STATEMENT:
THE DESCRIPTION WAS PREPARED BY ME OR UNDER MY DIRECTION IN CONFORMANCE WITH THE REQUIREMENTS OF THE LAND SURVEYOR'S ACT.

Jason R. Christie, C32712 April 21, 2016
Date

REGISTERED PROFESSIONAL ENGINEER
JASON R. CHRISTIE
No. C32712
Exp. 6-30-16
CIVIL
STATE OF CALIFORNIA

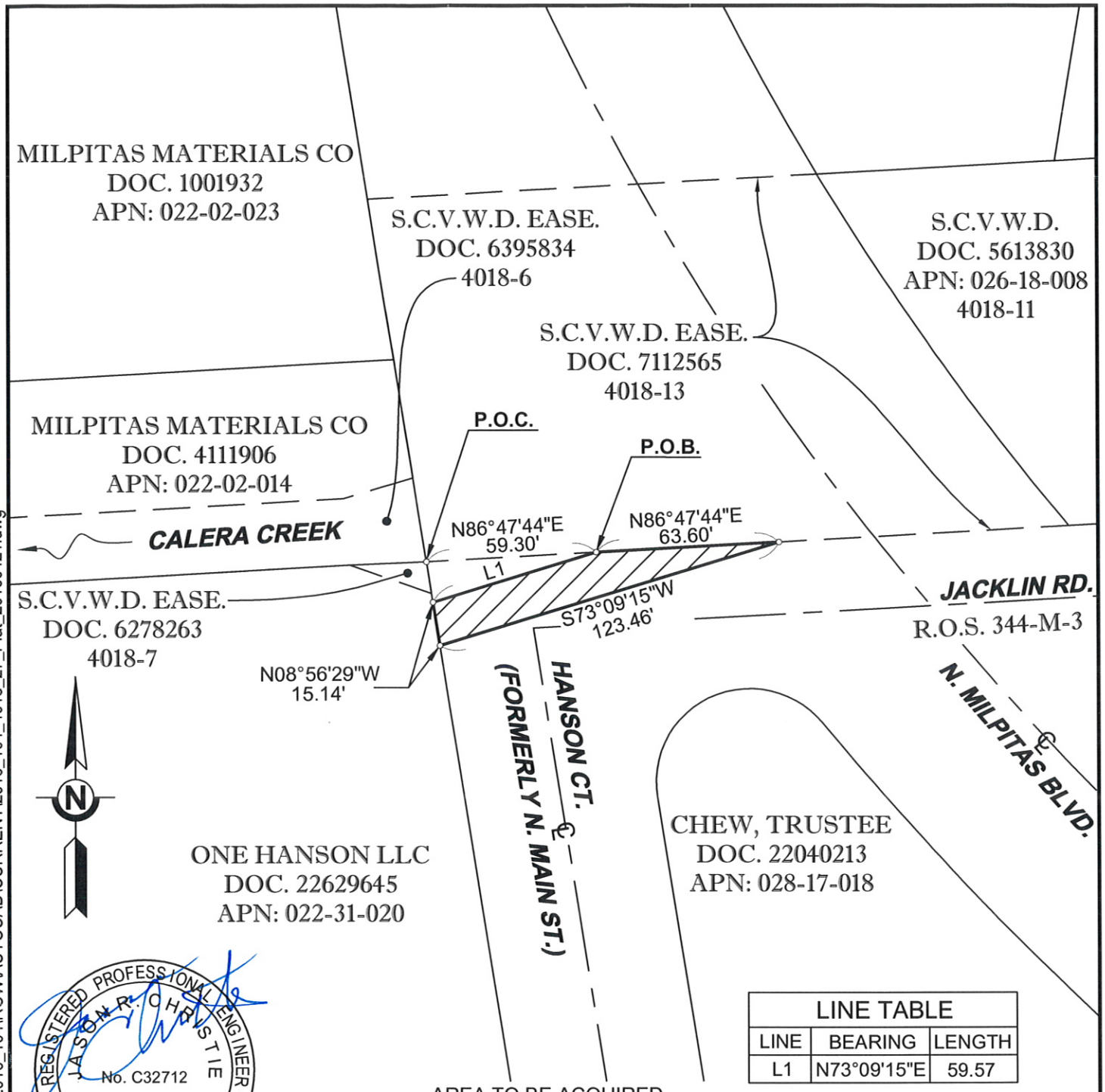

REGISTERED PROFESSIONAL ENGINEER
JASON R. CHRISTIE
No. C32712
CIVIL
STATE OF CALIFORNIA

LINE TABLE		
LINE	BEARING	LENGTH
L1	N73°09'15"E	59.57

AREA TO BE ACQUIRED
TOTAL AREA = 1,373 Sq. Ft. or 0.032 Ac. ±

APN = ASSESSOR'S PARCEL NUMBER
P.O.B. = POINT OF BEGINNING
P.O.C. = POINT OF COMMENCEMENT

EXHIBIT "B"

Santa Clara Valley Water District

SCALE: 1" = 50'

PROJ. NO.	4018
FILE NO.	27
APN	022-31-000
TITLE REPORT NO.	
DRAWN	CAA
DATE	03/22/10

REV.	APPR.	DATE	DESCRIPTION
1	SJ	02/26	SEPARATE PARCELS A AND B
2	RPC	4/21/16	REVISED PER CITY OF MILPITAS REDLINES

SCVWD S:\REQUESTS\CALERA CREEK\2016_104\ROW\AUTOCAD\CURRENT\2016_104_4018_27_Plat_20160421.dwg

Sheet 1 of 1

THIS PAGE INTENTIONALLY LEFT BLANK

This document was electronically submitted to Santa Clara County for recording

24043236

Regina Alcomendras
Santa Clara County - Clerk-Recorder
10/16/2018 09:05 AM

Titles: 1 Pages: 7
Fees: $0.00
Tax: $0.00
Total: $0.00

RECORDING REQUESTED BY

OLD REPUBLIC TITLE COMPANY

Escrow No.: 0616014906
APN: 022-31-020(PTN)

WHEN RECORDED MAIL TO

Santa Clara Valley Water District
Real Estate Services Unit
5750 Almaden Expressway
San Jose, CA 95118

RECORDING WITHOUT FEE UNDER
GOVERNMENT CODE SECTION 6103

DOCUMENT NO.: 4018-29

SPACE ABOVE THIS LINE FOR RECORDER'S USE

Temporary Construction Easement

1 ☐ Exempt from fee per GC27388.1(a)(2); document recorded in connection with a concurrent transfer subject to the imposition of documentary transfer tax

2 ☐ Exempt from fee per GC27388.1(a)(2); document transfers real property that is a residential dwelling to an owner-occupier

3 ☐ Exempt from fee per GC27388.1(a)(2); document recorded in connection with a concurrent transfer that is a residential dwelling to an owner-occupier

4 ☐ Exempt from fee per GC27388.1(a)(1); fee cap of $225 reached

5 ☐ Exempt from fee per GC27388.1(a)(2); document is subject to the imposition of documentary transfer tax

11 ☒ Exempt from fee per GC27388.1(a)(2); document is executed or recorded by the state or any county, municipality, or other political subdivision of the state

RR/rr

RECORD WITHOUT FEE UNDER GOVERNMENT CODE SECTION 6103

AFTER RECORDING RETURN TO:
REAL ESTATE SERVICES UNIT
SANTA CLARA VALLEY WATER DISTRICT
5750 ALMADEN EXPRESSWAY
SAN JOSE, CALIFORNIA 95118

SPACE ABOVE THIS LINE FOR RECORDER'S USE

APN: 022-31-020 (PORTION)

DOCUMENT NO.: 4018-29

TEMPORARY CONSTRUCTION EASEMENT

ONE HANSON LLC, a California limited liability company, hereinafter referred to as "Grantor," grants to the **SANTA CLARA VALLEY WATER DISTRICT**, a Special District, created by the California Legislature (District) hereinafter referred to as "Grantee," a temporary construction easement over, upon and across a portion of that real property in the City of Milpitas, County of Santa Clara, State of California, described as:

See Exhibit A attached hereto and made a part hereof.

This temporary construction easement is granted under the express conditions listed below:

1. Grantor represents and warrants that she/he is the owner of the property described in Exhibit A attached hereto and made a part hereof, and that Grantor has the exclusive right to grant the easement.

2. This easement is necessary for the purpose of constructing the Lower Berryessa Creek Flood Protection Project and related activities incident to construction. This temporary construction easement shall not be revoked and shall continue in full force and effect until such time the construction of the Lower Berryessa Creek Flood Protection Project has been completed at which time the temporary construction easement shall terminate.

3. Grantee agrees to use all reasonable efforts to keep the roadway covered by this easement open to traffic and to not interfere with residential occupants or construction activity of Grantor on site. Grantee will keep area covered by the easement clean and remove all debris related to its construction.

4. Grantee agrees to indemnify and hold harmless Grantor from and against any and all claims, damages, liabilities, costs or any expenses whatsoever, arising from or caused, directly or indirectly by the entry onto the property by Grantee or its agent's, employees, invitees, contractors and subcontractors.

DOCUMENT NO.: 4018-29

Dated this 2nd day of April, 2018

ONE HANSON LLC,
a California limited liability company

BY: _____
Bertrand S. Irissou, Manager

ALL-PURPOSE ACKNOWLEDGMENT

CIVIL CODE §1189

A notary public or other officer completing this certificate verifies only the identity of the individual who signed the document to which this certificate is attached, and not the truthfulness, accuracy, or validity of that document.

STATE OF CALIFORNIA
COUNTY OF SANTA CLARA } SS

On this 2ND day of April, in the year 2018, before me William G. Magleby, Notary Public, personally appeared Bertrand S. Irissou
Name(s) of Signer(s)

who proved to me on the basis of satisfactory evidence to be the person(s) whose name(s) is/are subscribed to the within instrument and acknowledged to me that he/she/they executed the same in his/her/their authorized capacity(ies), and that by his/her/their signature(s) on the instrument the person(s), or the entity upon behalf of which the person(s) acted, executed the instrument.

I certify under PENALTY OF PERJURY under the laws of the State of California that the foregoing paragraph is true and correct.

WITNESS my hand and official seal.

_____
Notary Public in and for said County and State

WILLIAM G. MAGLEBY
Notary Public – California
Santa Clara County
Commission # 2210649
My Comm. Expires Aug 26, 2021

CAPACITY CLAIMED BY SIGNER

Though statute does not require the Notary to fill in the data below, doing so may prove invaluable to persons relying on the document.

- ☐ Individual
- ☐ Corporate Officer(s): _____
- ☐ Partner(s) ☐ Limited ☐ General
- ☐ Attorney-In-Fact _____
- ☐ Trustee (s)
- ☐ Guardian/Conservator
- ☒ Other: MANAGER

Signer is Representing (Name of Person[s] or Entity[ies])

ONE HANSON LLC

DOCUMENT NO.: 4018-29

CERTIFICATE OF CONSENT AND ACCEPTANCE

This is to certify that the interest in real property conveyed by the attached Deed or Grant to the Santa Clara Valley Water District, also referred to herein as the Grantee, is hereby accepted by the undersigned duly authorized agent on behalf of the Board of Directors of said Santa Clara Valley Water District, pursuant to authority conferred by Resolution No. 14-79 of said Board of Directors adopted on the 9th day of September 2014, and the Grantee consents to recordation thereof by its said duly authorized agent.

Dated: June 12, 2018

Santa Clara Valley Water District

By: _____

Chief Executive Officer/~~Clerk of the Board of Directors~~
(Strike out inapplicable one)

EXHIBIT A

SANTA CLARA VALLEY WATER DISTRICT
5750 Almaden Expressway
San Jose, CA 95118

Original By:	HZ	Revised By:	
Date:	12/13/2016	Revision Date:	
PROJECT:	CALERA CREEK	APN:	022-31-020
PROPERTY:	ONE HANSON LLC	RESU File No.:	4018-29

ALL THAT CERTAIN REAL PROPERTY SITUATE IN THE CITY OF MILPITAS, COUNTY OF SANTA CLARA, STATE OF CALIFORNIA, BEING A PORTION OF THE LANDS DESCRIBED IN THAT CERTAIN GRANT DEED RECORDED ON JUNE 25, 2014 AS DOCUMENT NUMBER 22629645 OF OFFICIAL RECORDS, IN THE OFFICE OF THE RECORDER, COUNTY OF SANTA CLARA, STATE OF CALIFORNIA, MORE PARTICULARLY DESCRIBED AS FOLLOWS:

A STRIP OF LAND 10.00 FEET WIDE MEASURED AT RIGHT ANGLES RUNNING PARALLEL WITH AND LYING SOUTHERLY OF THE FOLLOWING DESCRIBED LINE:

COMMENCING AT THE INTERSECTION OF THE WESTERLY LINE OF HANSON COURT, FORMERLY KNOWN AS NORTH MAIN STREET OR SAN JOSE-OAKLAND HIGHWAY, WITH THE NORTHERLY LINE OF JACKLIN ROAD AS SHOWN ON THAT CERTAIN RECORD OF SURVEY FILED IN BOOK 90 OF MAPS AT PAGE 35 IN THE OFFICE OF THE RECORDER, COUNTY OF SANTA CLARA, STATE OF CALIFORNIA, SAID POINT ALSO BEING THE NORTH EASTERLY CORNER OF THAT CERTAIN EASEMENT DEED RECORDED ON FEBRUARY 4, 1979 AS DOCUMENT NUMBER 6278263 OF OFFICIAL RECORDS, IN THE OFFICE OF THE RECORDER, SANTA CLARA COUNTY;

THENCE ALONG THE WESTERLY LINE OF SAID HANSON COURT, SOUTH 09°03'10" EAST, 29.57 FEET TO THE **POINT OF BEGINNING**;

THENCE LEAVING SAID WESTERLY LINE, SOUTH 73°02'49" WEST, 23.50 FEET;

THENCE SOUTH 86°47'34" WEST, 48.63 FEET TO THE **POINT OF TERMINATION.**

CONTAINING 726 SQUARE FEET OF LAND, MORE OR LESS.

EXHIBIT "B" ATTACHED HERETO AND BY THIS MADE A PART HEREOF.

EXHIBIT A
(continued)

BASIS OF BEARING:

BEARINGS ARE BASED ON AND IDENTICAL TO THAT CERTAIN GRANT DEED RECORDED ON FEBRUARY 25, 2011 AS DOCUMENT NUMBER 21094836 OF OFFICIAL RECORDS, IN THE OFFICE OF THE RECORDER, COUNTY OF SANTA CLARA, STATE OF CALIFORNIA.

SURVEYOR'S STATEMENT:

THE DESCRIPTION WAS PREPARED BY ME OR UNDER MY DIRECTION IN CONFORMANCE WITH THE REQUIREMENTS OF THE LAND SURVEYOR'S ACT.

GISELA SILKE JOBST, L9169

4-25-2017
Date

LICENSED LAND SURVEYOR
GISELA SILKE JOBST
L9169
STATE OF CALIFORNIA

ONE HANSON LLC.

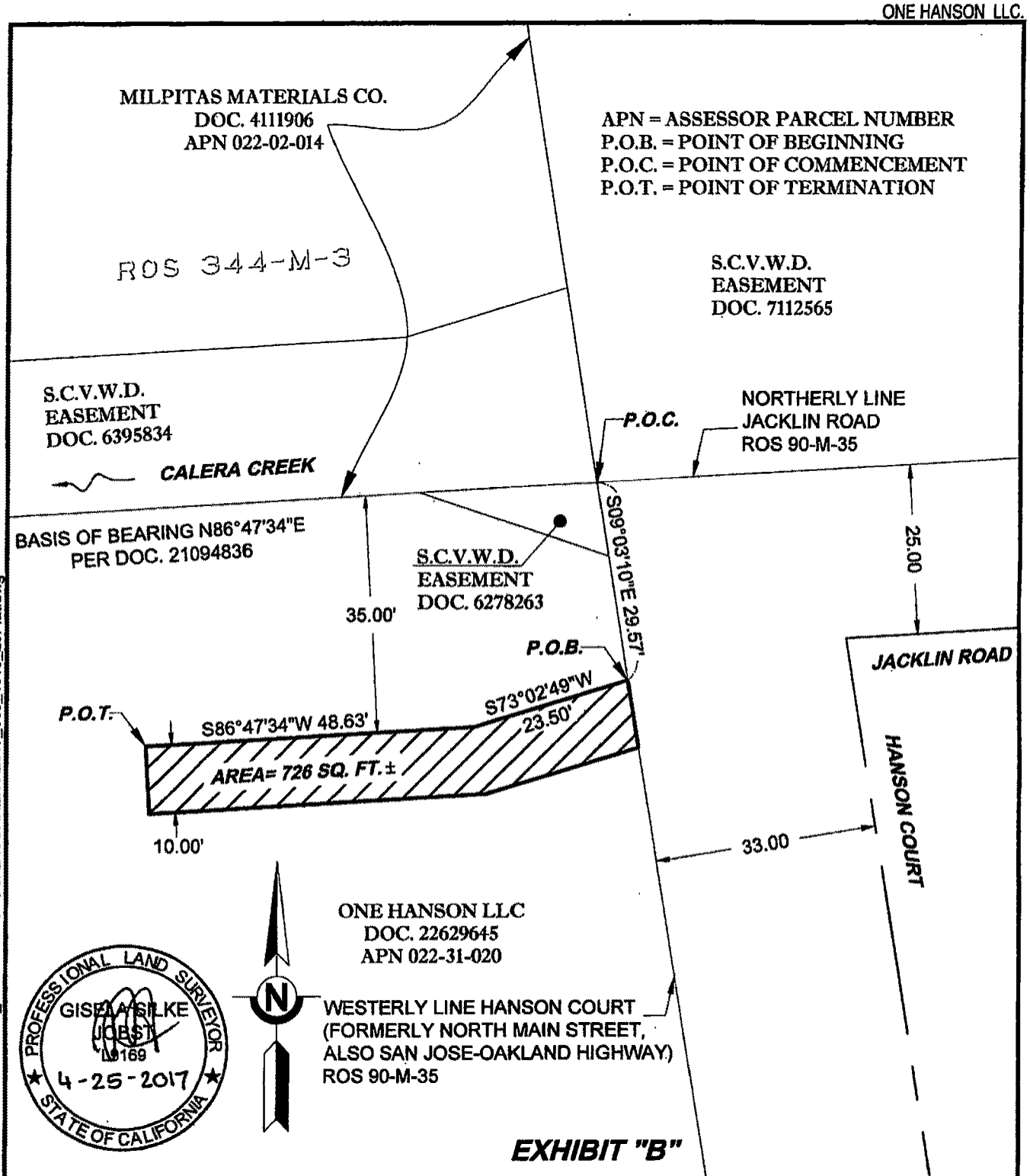

Santa Clara Valley Water District	SCALE: 1" = 20'	PROJ. NO.	4018
		FILE NO.	29
		APN	022-31-020
REV. / BY / DATE	DESCRIPTION	TITLE REPORT NO.	0616014906-RR
1		DRAWN	HZ
1		DATE	12/13/2016

SCVWD S:\REQUESTS\CALERA CREEK\2017_063\ROW\AUTOCAD\CURRENT\2017_063_4018_29Plat.dwg

SHEET 1 OF 1

THIS PAGE INTENTIONALLY LEFT BLANK

APPENDIX F

District Forms

1. Solid Waste Disposal and Recycling Report Form
2. Import Material Certification Form

THIS PAGE INTENTIONALLY LEFT BLANK

STATE OF CALIFORNIA • DEPARTMENT OF TRANSPORTATION

SOLID WASTE DISPOSAL AND RECYCLING REPORT

CEM-4401 (NEW 11/2006)

ADA Notice	For individuals with sensory disabilities, this document is available in alternate formats. For information call (916) 654-6410 or TDD (916) 654-3880 or write Records and Forms Management, 1120 N Street, MS-89, Sacramento, CA 95814.

1

Project Name:		Type of Work:	Ongoing Report ☐ Final Annual Report ☐
Contract Number:	Co./Rte/PM	Report for Calendar Year _____	[Note: Separate reports needed for each calendar year]
Contractor Name:		Phone Number:	Fax:
Street Address		City, State, Zip	

Contractor Certification: I certify under penalty of perjury that the information provided in this form is complete and accurate.

Signature:	Print Name and Title:	Date of Report:

2

***NOTE: Earth and rock material must not be reported as either waste material diverted from or disposed of in landfills.**

NAME AND LOCATION OF RECYCLING OR DISPOSAL FACILITY (OR ENTER "REUSED" FOR MATERIALS GENERATED AND REUSED ON THIS JOB)	CHECK IF LANDFILL	CHECK IF RECYCLER	**TYPE OF MATERIAL** (Enter a letter for each type on a separate line): A = Asphalt Concrete; C = Concrete; M = Metal; D = Mixed Debris; W = Wood/Cleared Vegetation; O = Other [Please Describe]† ***See note above**	**TYPE OF ACTIVITY** (Enter one activity per line) 1 = Source - Separated Materials Recycling 2 = On-Site Reuse 3 = Mixed Debris Recycling 4 = Reuse of Salvageable Items 5 = Disposal at Landfill or Transfer to Station 6 = Other [Please Describe]††	**AMOUNT TAKEN TO LANDFILL (TONS)**	**AMOUNT DIVERTED FROM LANDFILLS TO A RECYCLING FACILITY (TONS)**	**AMOUNT GENERATED AND THEN REUSED ON THIS JOB (TONS)**

† Describe Material:

†† Describe the Activity:

3

I have reviewed the information submitted in this report for completeness.

Resident Engineer's Name (Please Print):	Phone Number:
Signature:	Date:

STATE OF CALIFORNIA • DEPARTMENT OF TRANSPORTATION

SOLID WASTE DISPOSAL AND RECYCLING REPORT - INSTRUCTIONS

CEM-4401 (NEW 11/2006)

Section 1: To be completed by the contractor

Project Name: Give a brief description of the project, e.g., "Route 1 widening in Fort Bragg, CA"
Type of Work: Enter a general work description, e.g. "AC Grinding"
Ongoing Report: Checking this box means this is an annual report for a continuing project. More reports will follow this one
Final Annual Report: Checking this box means this report is for the calendar year of contract acceptance
Contract Number: Enter District/EA
Co./Rte/PM: Enter County/Route/Post-Mile
Report for Calendar Year: The calendar year for which data was collected - January 1 to December 31 [Note: This report is an annual report. A separate report is needed for each calendar year]
Company Information: Contractor Name, Phone Number, Fax Number, Street Address, City, State and Zip

Contractor Certification: I certify under penalty of perjury that the information provided in this form is complete and accurate.

Contractor should verify the data entered on this form, then sign the report and print your name, title, and date.
Return this report to the resident engineer by January 15 of each calendar year or within 15 days of contract acceptance.

Section 2: To be completed by the contractor

To count towards diversion, "solid waste" is defined as including any solid waste which would normally be disposed of at a disposal facility (PRC Section 41781 (b))

***NOTE: Earth and rock material must not be reported as either waste material diverted from or disposed of in landfills.**

NAME AND LOCATION OF RECYCLING OR DISPOSAL FACILITY (or enter "reused" for materials generated and reused on this job)
Each address should be checked as either landfills or recycler. When using a recycling facility that exists inside a landfill, check recycler and do not check landfill. When the solid waste is generated and reused on the job, the word "Reused" should be entered in place of the address.

TYPE OF MATERIAL Enter a letter for each type on a separate line:
A = Asphalt Concrete, C = Concrete; M = Metal; D = Mixed Debris; W = Wood/Cleared Vegetation; O = Other
[Describe the material when "Other" is selected]†

TYPE OF ACTIVITY Enter a number for each activity one per line:
1 = Source-Separated Materials Recycling; 2 = On-Site Reuse; 3 = Mixed Debris Recycling; 4 = Reuse of Salvageable Items;
5 = Disposal at Landfill or Transfer to Station; 6 = Other [Describe the activity when "Other" is selected] ††

AMOUNT TAKEN TO LANDFILL (Tons): Enter the amount of any solid waste, in tons, that is generated on this project and taken to a landfill.

AMOUNT DIVERTED FROM LANDFILLS TO A RECYCLING FACILITY (Tons): Enter the amount of any solid waste, in tons, that is generated on this project and taken to a recycling facility.

Solid waste from this job that is used in other projects, given to other agencies (county, city, etc.) or given to private individuals for reuse will be entered as taken to a recycling facility. In this case, check the activity as "Other" and describe who gets the solid waste in the row for other activity. (e.g. given to county, city or developer)

AMOUNT GENERATED AND THEN REUSED ON THIS JOB (Tons): Enter the amount of any solid waste, in tons, that is generated on this project and then reused.

TOTAL SOLID WASTE FROM EACH JOB SHOULD APPROXIMATE THE SUM OF THE THREE QUANTITIES ABOVE.

For calculating weights, some volume to weight conversions may be needed. These conversion factors may be found at the California Integrated Waste Management Board's (CIWMB) web site at:
http://www.ciwmb.ca.gov/LGLibrary/DSG/Apndxl.htm#Conversion

Section 3: To be completed by the resident engineer

I have reviewed the information submitted in this report for completeness.

Resident engineer please review the report. If the form is complete, sign and print your name, phone number, and date.
Discuss and resolve with the contractor any deficiency on the form.

Import Material Certification

Project Name and Location	_____
Contract or Permit Number	_____
Contractor's Name and Address Subcontractor's Address (if applicable)	_____ (Contact) (Phone Number) _____ (Street Address) _____ (City) (State) (Zip Code)
Original Source of the Subject Material* (e.g., excavation of building foundation, excavation of Hwy., etc.)	_____ _____
Original Owner of the Subject Material	_____ (Contact) (Phone Number) _____ (Street Address) _____ (City) (State) (Zip Code)
How Material is to be Used on Project* (e.g., backfill, temporary ramp, levee, etc.)	_____ _____
Material Placement or Location of use on Project*	Project Station: _____Elev._____ To Project Station: _____Elev._____

I hereby certify that the material identified above is not contaminated with regulated materials. I further certify that if the material is determined to be contaminated with regulated materials that I will immediately and diligently: remove all contaminated material and dispose of it in accordance with all applicable laws, ordinances and regulations; conduct necessary sampling and monitoring to verify that all contaminated material has been removed; and verify to the satisfaction of Valley Water and/or appropriate regulatory agencies that any surrounding areas, materials, soils or waters have not been impacted by the contaminated materials. I will conduct these removal and sampling activities at my sole expense without any costs to the Valley Water. I further declare that I am authorized to execute this certification.

I declare under penalty of perjury that the foregoing is true and correct. Executed this _____day of _____at _____(City), _____(State).

_____ _____
(Authorized Signature) (Date)

_____ _____
(Printed Name) (Title)

*Use additional sheets if necessary. Reference the applicable item being extended on the additional page.

THIS PAGE INTENTIONALLY LEFT BLANK

LOWER CALERA CREEK FLOOD PROTECTION PROJECT

Project No. 40174005

Contract No. C0666

1. **Notice**. **Due to the County of Santa Clara Public Health Officer's Order, the Santa Clara Valley Water District offices remain closed to the public until further notice**. Notice is hereby given that sealed Bids will be received by the Construction Program of the Santa Clara Valley Water District (District), delivered either by a third party carrier such as FED EX, UPS, DHL, Overnight, Golden State Overnight, etc. or by hand delivery, at the District's Winfield Warehouse Building located at 5905 Winfield Boulevard, an Jose, California 95123-2428 only between the hours of 1:00 p.m. to 2:00 p.m. on **Wednesday, March 3, 2021**, for furnishing all material and performing all work necessary for construction of the Lower Calera Creek Flood Protection Project, in Milpitas, California. **NO BIDS WILL BE ACCEPTED VIA USPS (US MAIL)**. Additional information and Instructions to Bidders are posted on the District's Construction Administration webpage: https://www.valleywater.org/construction.

2. **California State Department of Industrial Relations Contractor and Subcontractor Registration Requirements**.
California Labor Code Section 1771.1 requires:
A contractor or subcontractor shall not be qualified to bid on, be listed in a bid proposal, subject to the requirements of Section 4104 of the Public Contract Code, or engage in the performance of any contract for public work, unless currently registered and qualified to perform public work pursuant to Section 1725.5 of the California Labor Code.
An inadvertent error in listing a subcontractor who is not registered pursuant to Section 1725.5 in a bid proposal shall not be grounds for filing a bid protest or grounds for considering the bid nonresponsive, provided that any of the following apply:

   A. The subcontractor is registered prior to the bid opening.

   B. Within 24 hours after the bid opening, the subcontractor is registered and has paid the penalty registration fee.

   C. The subcontractor is replaced by another registered subcontractor pursuant to Section 4107 of the Public Contract Code.

3. Summary of Work

A. Project Description. The Project scope includes the following:

1. Compliance with NPDES General Permit, including Storm Water Pollution Prevention Plan preparation, installation, and monitoring of BMP's;

2. Compliance with the Project regulatory permits including the Lake or Streambed Alteration Agreement (CDFW), the Waste Discharge Requirements (SFBRWQCB), US Army Corps of Engineers permits, the State Water Resources (NPDES General Permit), and local and municipal permits;

3. Construction site reviews and site conditions monitoring;

4. Develop Contractor's quality control program and implement quality control for the Project;

5. Development of a Site-Specific Work Plan for Santa Clara Valley Transportation Authority (VTA) / Bay Area Rapid Transit (BART) and adherence to the approved permit conditions;

6. Conduct noise and vibration monitoring generated from construction activities;

7. Develop a traffic control and, upon approval by the City of Milpitas, implement traffic control for the Project;

8. Clearing and grubbing within the Project limits including removal of trees, and other site vegetation (including existing wetland and riparian species);

9. Demolition of existing driveway access, sidewalk, curb & gutter, sacked concrete, channel concrete lining, concrete floodwalls, concrete foundations, rock riprap protection, utility lines, chain link fence, and other miscellaneous items shown on the Drawings;

10. Design and implement control of water; including proper diversion of upstream drainage and channel flows, diversion of downstream tidal flows, maintaining a dry foundation excavation, and proper handling and disposal of groundwater flows that are required during construction;

11. Design and install a shoring or lateral restraint system for the existing north concrete U-frame wall and other locations shown in the Drawings;

12. Excavation, testing, and disposal of surplus levee and channel materials;

13. Levee construction, including excavation, raising, testing, and placement of materials;

14. Installation of asphalt concrete surface trails, aggregate base maintenance roads and maintenance access, resurfacing of existing aggregate base maintenance roads;

15. Installation of rock riprap slope protection at bridge transitions, and storm drain outfalls;

16. Replacement of existing sidewalk, driveway, curb and gutter in accordance with the City of Milpitas standard details;

17. Construct cast-in-place reinforced concrete retaining walls at maintenance road ramps;

18. Construct cast-in-place reinforced concrete U-frame walls and floodwalls;

19. Install surface texturing to concrete floodwalls and headwalls with decorative patterns as shown on the Drawings;

20. Construct new headwalls at the VTA/BART railroad, North Milpitas Boulevard, and Arizona Avenue bridge locations;

21. Perform potholing as shown on the Drawings for protection of existing utilities within and immediately adjacent to the Project limits;

22. Install storm drain pipes, catch basins, outfall, check valves, flap gates and modify existing storm drain outfalls to conform to the new floodwalls and earthen slopes;

23. Install chain link fence and maintenance road gates;

24. Furnish and install a new flood gate;

25. Furnish and install hydroseed and erosion control blanket as shown on the Drawings;

26. Relocation of the existing Comcast communication cables at North Milpitas Boulevard to a below ground facility as shown on the Drawings;

27. Protect existing residential fences during construction of and associated elements of the floodwalls and levees included in the Drawings;

28. Install wetland and landscape plantings, followed by implementation of the three-year plant establishment maintenance period;

29. Perform other miscellaneous construction work and items necessary to complete the work included in the Drawings and Specifications.

B. Milestone Completion

1. Milestone 1: Complete all civil, special structures, planting and all work within the new channel (property line to property line) shown in the Drawings and provided in the Specifications by December 31, 2022.

   a. Milestone 1a: Complete all civil special structures, planting and all work within the new channel (property line to property line) shown between N. Milpitas Boulevard (E-line Sta 18+50) and the upstream limits of the Project (E-line Sta 41+30) at the end of the first year of construction or December 31, 2021.

   b. Milestone 1b: Complete all remaining civil, special structures, planting and all work within the new channel (property line to property line) shown between N. Milpitas Boulevard (E-line Sta 18+50) and the downstream limits of the Project (E-line Sta 13+00) at the end of the second year of construction or December 31, 2022.

2. Milestone 2: Complete the three-year planting establishment and maintenance period set forth in Section 32 of the Specifications.

3. The Contractor shall complete Milestone 1 before the expiration of 620 Days from the first chargeable Day of the Contract.

4. The Contractor shall complete Milestone 2 before the expiration of 1,720 Days from the first chargeable Day of the Contract (Project Completion).

C. **Sole Source Products**. None.

4. **Contract Time**. Time limit for the completion of the Work is **1,720** calendar days. See Contract Documents, Special Provisions, Article 12.03. Contract Time(s) for Milestones and Contract Times.

5. **Liquidated Damages**. See Standard Provisions, Liquidated Damages, Article 5.07 and Special Provisions, Liquidated Damages, Article 12.05 of the Contract Documents for requirements regarding Liquidated Damages.

6. **Estimated Cost**. The estimated cost of the Project is $18.9 million to $24.2 million. This estimate is intended to serve merely as an indication of the magnitude of the Work. Neither the Bidder(s) nor the Contractor will be entitled to pursue a claim or be compensated due to variance in the stated estimated cost range.

A. **Additive/Deductive Bid Items**. **[NOT USED]**.

B. **Supplemental Bid Items.** These bid items may or may not be required. They may be deleted entirely or in part, by deductive change order(s), at the sole discretion of the District. The sum of the Total Base Bid and the Total Supplemental Bid will be used to determine the lowest Bid price.

7. **Contractor's License Requirement**. The Bidder must possess a current **Class A** Contractor's license issued by the California Department of Consumer affairs, Contractor's State License Board when the Bid is submitted. Regardless of whether a subcontractor must be identified at the time of Bid, each subcontractor must also be properly licensed to perform its scope of Work.

8. **Pre-Bid Conference and Site Visit**. A Pre-Bid conference/site visit will be conducted by the District on **Thursday, February 11, 2021**. The conference will convene at 10:00 a.m. (Pacific Standard Time), at North-West corner of North Milpitas Blvd and Hanson Court in Milpitas, CA 95035. Attendance at the Pre-Bid conference/site visit by subcontractors is not required.
Attendance by the Bidder at the Pre-Bid conference/site visit is:

☐ Mandatory
☒ Optional

The objective of the Pre-Bid conference/site visit is to familiarize prospective Bidders with the site; no additional site visits will be allowed. Please confirm your intent to attend the Pre-Bid conference/site visit 24 hours in advance by sending an email to scvwdplanroom@valleywater.org. Additional information regarding the Pre-Bid conference/site showing will be sent to all prospective Bidders who confirm their intention to attend.

In response to the COVID-19 pandemic, the District will require that all participants adhere to the orders of Social Distancing. All persons attending the Pre-Bid conference/site visit are required to adhere to the orders of Social Distancing and are also required to bring and wear the appropriate Personal Protection Equipment (PPE), i.e., protective face covering, in order to be allowed entrance onto the site and to remain on the site.

Reasonable efforts will be made to accommodate persons with disabilities wishing to attend the Pre-Bid conference/site visit. Please request accommodations when confirming attendance.

9. **Availability of Bid Documents**

Due to the County of Santa Clara Public Health Officer's Order, District offices will remain closed to the public until further notice. The Contract Documents are only available in electronic (PDF) format. The electronic version is free and will be transferred via file transfer appliance (FTA) site.

To Request Electronic Contract Documents:

Request Form and information available online:

- Website: https://www.valleywater.org/construction
- Email: scvwdplanroom@valleywater.org

10. **Inquiries**. The Bidder must submit all requests for clarification, or interpretation of the Bid Documents in accordance with the requirements stated in Instructions to Bidders, paragraph #7. Questions During Bidding. Written questions must be directed to the Contracts Administrator at scvwdplanroom@valleywater.org and submitted at least nine (9) calendar days before the deadline for receipt of Bids.

The District may issue written Addenda as appropriate for clarification or other purposes during the bidding period. Addendum notification(s) will be sent to each planholder at the email address provided by the contractor for the planholders list and addenda will be posted on the District's website at https://www.valleywater.org/construction.

A. **Project Manager**. The District's project manager for this Project is Javier Valencia.

B. **Process Questions**. For questions regarding the bid process, please contact the District Plan Room by email at scvwdplanroom@valleywater.org.

11. **Prevailing Wage Requirements**

A. Workers employed on this Project must be paid at rates at least equal to the prevailing wage rates as determined by the State of California Department of Industrial Relations pursuant to Section 1770 *et seq.* of the Labor Code. Said wage rates are incorporated herein by reference and are available on the State of California Department of Industrial Relations website at: http://www.dir.ca.gov/. See Standard Provisions, Prevailing Wages Article 4.04. through Apprentices Article 4.06. for related requirements.

Due to the County of Santa Clara Public Health Officer's Order, District offices will remain closed to the public until further notice. The wage rates are therefore not currently available for review at District offices.

B. This Project is subject to compliance monitoring and enforcement by the State of California Department of Industrial Relations. The Contractor and subcontractors must furnish the records specified in Section 1776 directly to the Labor Commissioner, in the following manner: monthly, in a format prescribed by the Labor Commissioner.

12. **Bid Proposal Submittal**. All Bids must be submitted in sealed envelopes addressed to the Santa Clara Valley Water District. Attention: Construction Programs and state the Project name and Project number on the outside of the sealed envelope. Each Bid must

be submitted on the prescribed Bid Forms. All information on Bid Forms must be completed in ink.

A. **Bid Submittal Delivery**. Bidders are allowed to submit a bid proposal by third party carrier or by hand delivery.

THIRD PARTY CARRIER such as: FEDEX, UPS, DHL, CA Overnight, Golden State Overnight, etc., and must address the submittal in accordance with instructions stated in this paragraph 12. Any Proposal received after 2 p.m. will not be considered. Late Bids will be returned unopened.

HAND DELIVERY shall only be between the hours of 1:00 p.m. - 2:00 pm. on the bid due date, at the Winfield Warehouse located at 5905 Winfield Boulevard, San Jose, CA 95123. Upon entrance through the gate, turn left towards the warehouse building. Bid submittal shall be delivered at a drop off box, marked "Bid/Submittal Drop Box," located in front of the warehouse entrance door. Each Bidder must take a picture using its cellphone showing the "Official Bid Clock" timer as proof of delivery. Bidders must observe all Public Health Officers orders and wear proper face covering when dropping off your Bid.

Any Proposal received after 2 p.m. will not be considered. Late Bids will be returned unopened.

NO BIDS WILL BE ACCEPTED VIA USPS (US MAIL). USPS (US Mail) does not deliver to 5905 Winfield Boulevard.

Address the outside delivery envelope as follows:

Santa Clara Valley Water District
Attention: Construction Program
C0666 – Lower Calera Flood Protection Project
5905 Winfield Boulevard
San Jose, CA 95123-2428

13. **Bid Opening**. For the duration of the COVID-19 pandemic, to ensure the safety of the public and District employees and requisite social distancing requirements by Order of the County of Santa Clara Public Health Officer, the opening of bids shall be made available to the public only by video teleconference, live-stream, on the date stated in this Notice to Bidders, paragraph #1. Notice, above, at **2:30 p.m.** The results will be posted on the District's website at https://www.valleywater.org/construction no later than the following day.

A. **Join Zoom Meeting**. Any person interested in attending the live-stream bid opening, may do so by accessing the link below, or join via phone by calling the toll-free number listed below:

Join Zoom Meeting: https://valleywater.zoom.us/j/3796054075

Meeting ID: 379 605 4075

One tap mobile:
+16699009128, 3796054075# US (San Jose)
+13462487799, 3796054075# US (Houston)

Dial by your location:
+1 669 900 9128 US (San Jose)
+1 346 248 7799 US (Houston)
+1 253 215 8782 US (Tacoma)
+1 646 558 8656 US (New York)
+1 301 715 8592 US (Germantown)
+1 312 626 6799 US (Chicago)

Meeting ID: 379 605 4075

Find your local number: https://valleywater.zoom.us/u/aekffBkBma

14. **Errors or Discrepancies in the Bids**. The District Board of Directors reserves the right to reject any and all Bid Proposals and to waive minor defects or irregularities in any submitted Bid Form(s).

15. **Bidder's Security**. Each Proposal must be accompanied by cash, a certified check, money order, cashier's check, or an original Bidder's bond in the sum of not less than 10 percent of the total aggregate of the Proposal including all additive and supplemental Bid items, if any. Said checks or bond must be made payable to the Santa Clara Valley Water District.

16. **Contract Retention**

☒ The Contract Retention for this Project is established at five (5) percent of the Contract Price.

☐ The Contract Retention for this Project is established at ten (10) percent of the Contract Price. The Board of Directors has made a finding that the Project is substantially complex and therefore requires retention higher than five percent.

17. **Substitution of Securities**. The Contractor may, at the Contractor's request and expense substitute securities equivalent to the amount withheld by District to ensure the performance of the contract, in accordance with Public Contract Code Section 22300.

18. **Small Business Preference. [NOT USED]**.

19. **Equal Opportunity**. The District is an equal opportunity employer and all Contractors of District projects are to have and follow a policy of equal opportunity including adherence to all state and federal laws and regulations, including the Federal Equal Opportunity Clause.

By order of the Board of Directors of the Santa Clara Valley Water District, San Jose, California, on Tuesday, January 26, 2021.

ATTEST: MICHELE L. KING, CMC

_____
Clerk, Board of Directors

THIS PAGE INTENTIONALLY LEFT BLANK

Santa Clara Valley Water District

File No.: 21-0097

Agenda Date: 1/26/2021
Item No.: *3.3.

BOARD AGENDA MEMORANDUM

SUBJECT:
Adopt Plans and Specifications and Authorize Advertisement for Bids for the Anderson Dam Tunnel Project, Project No. 91864005, Contract No. C0663 (Morgan Hill) (District 1).

RECOMMENDATION:

A. Adopt the plans and specifications and authorize advertisement for bids for the construction of the Anderson Dam Tunnel Project (Project), per the Notice to Bidders, exclusively to the list of Valley Water pre-qualified bidders; and
B. Authorize the Designated Engineer to issue addenda, as necessary, during bidding.

SUMMARY:

Santa Clara Valley Water District (Valley Water) is undertaking the Anderson Dam Federal Energy Regulatory Commission Order Compliance Project (FOCP) as a result of the February 20, 2020 directive from the Federal Energy Regulatory Commission (FERC) to implement interim risk reduction measures at Anderson Dam. One of those measures is the Anderson Dam Tunnel Project (ADTP).

The ADTP will construct a diversion system to augment the existing outlet, which will consist of a new diversion tunnel, an outlet structure, a micro-tunnel lake tap, and modifications to Coyote Creek just downstream of the base of the dam. The Project also includes reservoir bank and rim stability improvements and existing intake structure modification.

The diversion system will consist of a 23-ft diameter approximately 1,450-ft long tunnel, will be able to pass releases from the reservoir at flow rates up to 2,000 cubic feet per second (cfs). The new outlet structure will be used to control flows through the tunnel which will go through dissipation chambers and will be discharged into a rip-rap lined channel, before entering the Coyote Creek. Modifications to Coyote Creek just downstream of the base of the dam will be made to accommodate the higher flows from the tunnel.

Staff is recommending the Board approve the Project's final plans and specifications and authorize staff to advertise for construction bids.

Relevant Prior Board Action(s)

On June 23, 2020 the Board approved the CEQA emergency exemption determination for the FOCP; adopted the Resolution approving the Engineer's Report for the FOCP; and approved the Project.

On August 25, 2020 the Board approved implementing a best value construction contractor selection method for the ADTP.

On December 8, 2020, the Board approved a budget adjustment in the amount of $21 million from the Capital Warranty Services Project No. 95074001 to the Anderson Dam Seismic Retrofit Project No. 91864005.

Rights of Way

Staff anticipates acquiring a permanent easement from the County of Santa Clara which is required to construct the Coyote Creek modifications portion of the Project.
Staff will not recommend Board award of a construction contract until all required permanent rights of way are secured.

Permits

Staff anticipates receiving all permits necessary for construction prior to recommending award of the construction contract to the Board.

Public Outreach

Valley Water will utilize a variety of outreach strategies to keep the community informed of the Project progress and important milestones. During the Project's design phase, outreach strategies included numerous public meetings and mailed notices to collect input, a Project website (<https://www.valleywater.org/anderson-dam-project >), Project fact sheets, and media relations.

During construction, outreach will be targeted to the surrounding neighborhoods and include pre-construction and post-construction public meetings. In addition to the outreach tactics used during the design phase, construction phase outreach will include regular email updates and construction site signage.

Outreach to Bidders for Pre-Qualification Process

Because of the size and complexity of the ADTP, staff prequalified contractors, using the California State Department of Industrial Relations sample prequalification application questionnaires and approach as a guide. The prequalification questionnaire required contractors wishing to bid on this Project to demonstrate they have successfully completed projects of a similar size and scope.

The District did extensive outreach to potential contractors seeking to prequalify to bid by advertising in the San Jose Post-Record and notifying 27 plan rooms. The District also notified all

450 contractors listed in the District's contractor database. The Notice of Request for Prequalification was issued on August 18, 2020 and a mandatory prequalification conference for contractors was held via Zoom on August 27, 2020. Ten (10) contractors submitted the prequalification questionnaire by the September 25, 2020 deadline. The information in the prequalification questionnaires was reviewed by staff and external consultants (the Project design firm and the Project program management firm).

The list of final prequalified contractors was posted on the District's website on November 25, 2020. The following six contractors met the prequalification requirements and will be the only contractors eligible to bid on the Project.

1) Guy F. Atkinson Construction, LLC d.b.a. Guy F. Atkinson
2) Dragados USA, Inc. / Obayashi Corporation Joint Venture
3) Flatiron West, Inc.
4) Granite Construction Company
5) Kiewit Infrastructure West Co.
6) Traylor Brothers, Inc. / Michels Pipeline Joint Venture

The Notice to Bidders will be posted on the District's website and sent only to the prequalified contractors for the Anderson Dam Tunnel Project. On August 25, 2020 the Board approved implementing a best value construction contractor selection method for the ADTP. A combination of price and non-price items will be considered in choosing the contractor.

Next Steps

If the Board approves the recommendations, staff will proceed to advertise for bids for Project construction. Staff anticipates recommending the Board award a construction contract on April 27, 2021.

FINANCIAL IMPACT:
The estimated construction contract cost for the Project is between $175 million and $225 million. The Project is included in the Five-Year FY 2021-2025 Capital Improvement Program. There is sufficient funding in the Fiscal Year 2020-21 Budget to encumber a portion of the construction contract.

Staff anticipates scheduling another Board agenda item to be considered for an additional budget adjustment which will fund the anticipated construction costs relating to the construction contract for the ADTP project. The increase in the Project Plan cost was presented to the CIP Committee on November 9, 2020 as part of the significant Project Plan updates since adoption of the adopted Fiscal Year 2021-25 CIP and will be incorporated into the Five-Year 2022-26 CIP.

The Project is funded by a combination of Safe Clean Water (Fund 26) and Water Utility (Fund 61).

CEQA:
CEQA provides a statutory exemption for emergency projects, which include specific actions necessary to prevent or mitigate an emergency (Public Resources Code §21080(b)(4) and CEQA Guidelines §15269(c)). After analysis of the facts and applicable law, on June 23, 2020 following a public hearing, the Board determined that the FOCP, inclusive of the ADTP measure, qualifies for this emergency exemption. Valley Water filed a Notice of Exemption with the County of Santa Clara Clerk/Recorder on June 26, 2020.

ATTACHMENTS:
Attachment 1: Notice to Bidders
Attachment 2: Project Delivery Process Chart
*Supplemental Agenda Memorandum
*Supplemental Attachment 1: Notice to Bidders
*Supplemental Attachment 2: Non-Disclosure Agreement

UNCLASSIFIED MANAGER:
Christopher Hakes, 408-630-3796

ANDERSON DAM TUNNEL PROJECT

Project No. 91864005

Contract No. C0663

1. Notice. Due to the County of Santa Clara Public Health Officer's Order, the Santa Clara Valley Water District offices remain closed to the public until further notice.

Notice is hereby given that sealed Bids will be received by the Construction Program of the Santa Clara Valley Water District (District), delivered either by a third party carrier such as FED EX, UPS, DHL, Overnight, Golden State Overnight, etc. or by hand delivery, at the District's Winfield Warehouse Building located at 5905 Winfield Boulevard, San Jose, California 95123-2428 only between the hours of 1:00 p.m. to 2:00 p.m. on **Wednesday, March 10, 2021**, for furnishing all material and performing all work necessary for construction of Anderson Dam Tunnel Project, within the Cities of Morgan Hill, California, and San Jose, California, and within Unincorporated Santa Clara County, California.

NO BIDS WILL BE ACCEPTED VIA USPS (US MAIL).

Additional information and Instructions to Bidders are posted on the District's Construction Administration webpage: https://www.valleywater.org/construction.

2. California State Department of Industrial Relations Contractor and Subcontractor Registration Requirements.

California Labor Code Section 1771.1 requires:

A contractor or subcontractor shall not be qualified to bid on, be listed in a bid proposal, subject to the requirements of Section 4104 of the Public Contract Code, or engage in the performance of any contract for public work, unless currently registered and qualified to perform public work pursuant to Section 1725.5 of the California Labor Code.

An inadvertent error in listing a subcontractor who is not registered pursuant to Section 1725.5 in a bid proposal shall not be grounds for filing a bid protest or grounds for considering the bid nonresponsive, provided that any of the following apply:

A. The subcontractor is registered prior to the bid opening.

B. Within 24 hours after the bid opening, the subcontractor is registered and has paid the penalty registration fee.

C. The subcontractor is replaced by another registered subcontractor pursuant to Section 4107 of the Public Contract Code within 24 hours after the bid opening.

3. Summary of Work

A. Project Description. The project scope, in accordance with the Contract Documents, includes the following:

- Full compliance with federal, state, and local laws, orders, ordinances, and various agencies permit's terms and conditions, as required to construct the project;
- Furnish a qualified biologist, certified and licensed arborist, and licensed geologist as required for the project;
- Compliance with NPDES Construction General Permit, including SWPPP preparation, and installation of Best Management Practices (BMPs);
- Installation of a temporary soundwall to reduce construction noise to the surrounding businesses and residences;
- Proper excavation, handling, and placement in the on-site disposal area of naturally occurring asbestos containing materials;
- Control of water, including the design, implementation, and maintenance of dewatering facilities;
- Mobilization, including, but not limited to the installation of fully operational temporary trailers/office facilities;
- Demobilization, including, but not limited to the removal and/or legal disposal of all temporary facilities;
- Implement and maintain public safety measures, including, but not limited to installation of temporary fencing at the perimeter of the work areas;
- Clearing and grubbing within the project limits, including demolition, the removal of trees, vegetation, concrete, and other miscellaneous items;
- Surveying, grade control, and construction staking;
- The Installation and monitoring of portal and tunnel instrumentation;
- Establishment of site access roads, staging areas, and disposal areas;
- Excavation and reinforcement of the downstream tunnel portal;
- Dredging and preparation of the upstream portal;
- Excavation and initial support of the 18.5-foot tunnel, 24-foot tunnel, and the micro-tunnel boring machine (MTBM) launch chamber;
- Driving of the 8-foot MTBM tunnel lake-tap from the launch chamber to Anderson Reservoir;

- Excavation and initial support of the High-Level Outlet Works (HLOW) drop shaft;
- Installation of the final reinforced concrete lining in the MTBM launch chamber and the 24-foot tunnel;
- Installation of steel pipe in the diversion tunnel and HLOW drop shaft;
- Construction of the diversion outlet structure;
- Construction of the upstream trash rack structure below water;
- Installation of steel pipe, displacement couplers, two 132-inch butterfly valves, two 132-inch fixed cone valves, and other mechanical equipment at the diversion outlet structure;
- Installation of electrical components, instrumentation and controls;
- Testing of diversion system;
- Construction of the Coyote Creek channel improvements including the outlet discharge channel, the northern channel, and the reinforced concrete weirs in the northern and southern channels;
- Installation of landscape and landscape maintenance. Landscape maintenance includes maintenance during the landscape installation and maintenance during the one-year establishment period following the landscape installation;
- Provide all the necessary traffic control, traffic control signage, devices, etc. as required for temporary road work, including closures;
- Furnishing and Installation of permanent fencing and gates;
- Utility coordination and installation including, but not limited to raw water line facilities overhead and underground electrical facilities;
- Non-native plant control;
- Revegetation (hydroseeding);
- Other miscellaneous construction work and items necessary to satisfactorily complete the project work.

B. Sole Source Products. None.

4. Basis of Award.

Valley Water Board of Directors adopted Resolution No. 20-70 Approving Best Value Contractor Selection for the Anderson Dam Tunnel Project on August 25, 2020. A

"value" will be established for each bid submitted, determined by evaluation of objective criteria based on price (cost), and qualification (competency, capability, capacity to complete a project of similar size, scope, complexity, recently performed similar projects, references to verify past performance, history of regulatory compliance, bonding capacity, and ability to meet insurance requirements).

The "value" is established by a number, which is calculated by dividing each bidder's price (P) by its qualification (Q) score. When the calculated individual numbers (for each bid) are arranged in ascending order, from lowest to highest, the lowest number becomes or is ranked as the "Best Value" bid, followed by the next highest number and so on. The formula as detailed in the Prequalification Application, Revision 2, Appendix D Calculating a Bidder's Best Value Score, will be used to calculate the qualifications score to weigh quality at 40% and price at 60%.

5. **Contract Time**. Time limit for the completion of the Work is **1,050** calendar days. See Contract Documents, Special Provisions, Article 12.03. Contract Time(s) for Milestones and Contract Times.

6. **Liquidated Damages**. See Standard Provisions, Liquidated Damages, Article 5.08 and Special Provisions, Liquidated Damages, Article 12.05 of the Contract Documents for requirements regarding Liquidated Damages.

7. **Estimated Cost**. The estimated cost of the Project is between $175 million and $225 million. This estimate is intended to serve merely as an indication of the magnitude of the Work. Neither the Bidder(s) nor the Contractor will be entitled to pursue a claim or be compensated due to variance in the stated estimated cost range.

A. **Additive/Deductive Bid Items**. **[NOT USED]**.

B. **Supplemental Bid Items**. These Bid Items may or may not be required. Supplemental Bid items include development of staging areas and access roads, excavation, grading, soil nail installation, instrumentation installation to remediate two existing landslides located along the southwestern reservoir rim and excavation, grading, reinforced concrete, soil nail installation, and other miscellaneous work to strengthen the existing sloping intake located on the left abutment upstream of Anderson Dam. The Supplemental Bid Items may be deleted entirely or in part, by deductive change order(s), at the sole discretion of the District.

8. **Contractor's License Requirement**. The Bidder must possess a current **Class A** Contractor's license issued by the California Department of Consumer affairs, Contractor's State License Board when the Bid is submitted. Regardless of whether a subcontractor must be identified at the time of Bid, each subcontractor must also be properly licensed to perform its scope of Work.

9. **Pre-Bid Conference and Site Visit**. A Pre-Bid conference/site visit will be conducted by the District on **Wednesday, February 17, 2021**. The Pre-Bid conference/site visit will convene at 10:00 a.m. (by District time), at the parking lot at the toe of Anderson Dam at 2499 Cochrane Road, Morgan Hill, CA 95027 (APN 729-48-001). Attendance at the Pre-Bid conference/site visit by subcontractors is not required.

Attendance by the Bidder at the Pre-Bid conference/site visit is:

☐ Mandatory

☒ Optional

The objective of the Pre-Bid conference/site visit is to familiarize prospective Bidders with the site; no additional site visits will be allowed. Please confirm your intent to attend the Pre-Bid conference/site visit 24 hours in advance by sending an email to scvwdplanroom@valleywater.org.

Additional information regarding the Pre-Bid conference/site showing will be sent to all prospective Bidders who confirm their intention to attend.

In response to the COVID-19 pandemic, the District will require that all participants adhere to the orders of Social Distancing. All persons attending the Pre-Bid conference/site visit are required to adhere to the orders of Social Distancing and are also required to bring and wear the appropriate Personal Protection Equipment (PPE), i.e., protective face covering, in order to be allowed entrance onto the site and to remain on the site.

Reasonable efforts will be made to accommodate persons with disabilities wishing to attend the Pre-Bid conference/site visit. Please request accommodations when confirming attendance.

10. **Availability of Bid Documents**

Due to the County of Santa Clara Public Health Officer's Order, District offices will remain closed to the public until further notice. The Contract Documents are only available in electronic (PDF) format. The electronic version is free and will be transferred via file transfer appliance (FTA) site.

To Request Electronic Contract Documents:
Request Form and information available online:

- Website: https://www.valleywater.org/construction
- Email: scvwdplanroom@valleywater.org

11. **Inquiries**. The Bidder must submit all requests for clarification, or interpretation of the Bid Documents in accordance with the requirements stated in Instructions to Bidders, paragraph #7. Questions During Bidding. Written questions must be directed to the Contracts Administrator at scvwdplanroom@valleywater.org and submitted at least nine (9) calendar days before the deadline for receipt of Bids.

The District may issue written Addenda as appropriate for clarification or other purposes during the bidding period. Addendum notification(s) will be sent to each planholder at the email address provided by the contractor for the planholders list and addenda will be posted on the District's website at https://www.valleywater.org/construction.

A. **Project Manager**. The District's project manager for this Project is Mr. Bal Ganjoo.

B. **Process Questions**. For questions regarding the bid process, please contact the District Plan Room by email at scvwdplanroom@valleywater.org.

12. Prevailing Wage Requirements

A. Workers employed on this Project must be paid at rates at least equal to the prevailing wage rates as determined by the State of California Department of Industrial Relations pursuant to Section 1770 *et seq.* of the Labor Code. Said wage rates are incorporated herein by reference and are available on the State of California Department of Industrial Relations website at: http://www.dir.ca.gov/. See Standard Provisions, Prevailing Wages Article 4.04. through Apprentices Article 4.06. for related requirements.

Due to the County of Santa Clara Public Health Officer's Order, District offices will remain closed to the public until further notice. The wage rates are therefore not currently available for review at District offices.

B. This Project is subject to compliance monitoring and enforcement by the State of California Department of Industrial Relations. The Contractor and subcontractors must furnish the records specified in California Labor Code Section 1776 directly to the Labor Commissioner, in the following manner: monthly, in a format prescribed by the Labor Commissioner.

13. **Bid Proposal Submittal**. All Bids must be submitted in sealed envelopes addressed to the Santa Clara Valley Water District. Attention: Construction Programs and state the Project name and Project number on the outside of the sealed envelope. Each Bid must be submitted on the prescribed Bid Forms. All information on Bid Forms must be completed in ink.

A. **Bid Submittal Delivery**. Bidders are allowed to submit a bid proposal by third party carrier or by hand delivery.

THIRD PARTY CARRIER such as: FEDEX, UPS, DHL, CA Overnight, Golden State Overnight, etc., and must address the submittal in accordance with instructions stated in this paragraph 12. Any Proposal received after 2 p.m. will not be considered. Late Bids will be returned unopened.

HAND DELIVERY shall only be between the hours of 1:00 p.m. - 2:00 pm. on the bid due date, at the Winfield Warehouse located at 5905 Winfield Boulevard, San Jose, CA 95123. Upon entrance to the gate, turn left towards the warehouse

building. Bid submittal shall be delivered at a drop off box, marked "Bid/Submittal Drop Box," located in front of the warehouse entrance door. Bidder's must take a picture using its cellphone showing the "Official Bid Clock" timer as proof of delivery. Bidders must observe all Public Health Officers orders and wear proper face covering when dropping off your Bid.

Any Proposal received after 2 p.m. will not be considered. Late Bids will be returned unopened.

NO BIDS WILL BE ACCEPTED VIA USPS (US MAIL). USPS (US Mail) does not deliver to 5905 Winfield Boulevard.

Address the outside delivery envelope as follows:
Santa Clara Valley Water District
Attention: Construction Contracts & Support Unit
C0663 – Anderson Dam Tunnel Project
Project No. 91864005
5905 Winfield Boulevard
San Jose, CA 95123-2428

14. **Bid Opening**. For the duration of the COVID-19 pandemic, to ensure the safety of the public and District employees and requisite social distancing requirements by Order of the County of Santa Clara Public Health Officer, the opening of bids shall be made available to the public only by video teleconference, live-stream, on the date stated in this Notice to Bidders, paragraph #1. Notice, above, at **2:30 p.m.** The results will be posted on the District's website at https://www.valleywater.org/construction no later than close of business the following day.

A. **Join Zoom Meeting**. Any person interested in attending the live-stream bid opening, may do so by accessing the link below, or join via phone by calling the toll-free number listed below:

Join Zoom Meeting: https://valleywater.zoom.us/j/3796054075

Meeting ID: 379 605 4075

One tap mobile:
+16699009128, 3796054075# US (San Jose)
+13462487799, 3796054075# US (Houston)

Dial by your location:
+1 669 900 9128 US (San Jose)
+1 346 248 7799 US (Houston)
+1 253 215 8782 US (Tacoma)
+1 646 558 8656 US (New York)
+1 301 715 8592 US (Germantown)
+1 312 626 6799 US (Chicago)

Meeting ID: 379 605 4075

Find your local number: https://valleywater.zoom.us/u/aekffBkBma

15. **Errors or Discrepancies in the Bids**. The District Board of Directors reserves the right to reject any and all Bid Proposals and to waive minor defects or irregularities in any submitted Bid Form(s).

16. **Bidder's Security**. Each Proposal must be accompanied by cash, a certified check, cashier's check, or an original Bidder's bond in the sum of not less than 10 percent of the total aggregate of the Proposal including all additive and supplemental Bid items, if any. Said checks or bond must be made payable to the Santa Clara Valley Water District.

17. **Contract Retention**

☒ The Contract Retention for this Project is established at five (5) percent of the Contract Price.

☐ The Contract Retention for this Project is established at ten (10) percent of the Contract Price. The Board of Directors has made a finding that the Project is substantially complex and therefore requires retention higher than five percent.

18. **Substitution of Securities**. The Contractor may, at the Contractor's request and expense substitute securities equivalent to the amount withheld by District to ensure the performance of the contract, in accordance with Public Contract Code Section 22300.

19. **Small Business Preference. [NOT USED]**.

20. **Rights of Way.** It is anticipated that easement acquisition from the County of Santa Clara to construct the Coyote Creek modifications portion of the Project will be finalized before April 2021. The construction contract will not be awarded by Valley Water until all required Rights of Way are secured.

21. **Permits.** It is anticipated that all permits necessary for construction of the Project will be finalized before April 2021. The construction contract will not be awarded by Valley Water until all required Permits are obtained.

22. **Equal Opportunity**. The District is an equal opportunity employer and all Contractors of District projects are to have and follow a policy of equal opportunity including adherence to all state and federal laws and regulations, including the Federal Equal Opportunity Clause.

By order of the Board of Directors of the Santa Clara Valley Water District, San Jose, California, on Tuesday, January 26, 2021.

ATTEST: MICHELE L. KING, CMC

_____
Clerk, Board of Directors

THIS PAGE INTENTIONALLY LEFT BLANK

Project Delivery Process

Anderson Dam Tunnel Project, Contract No. C0663, Project No. 91864005

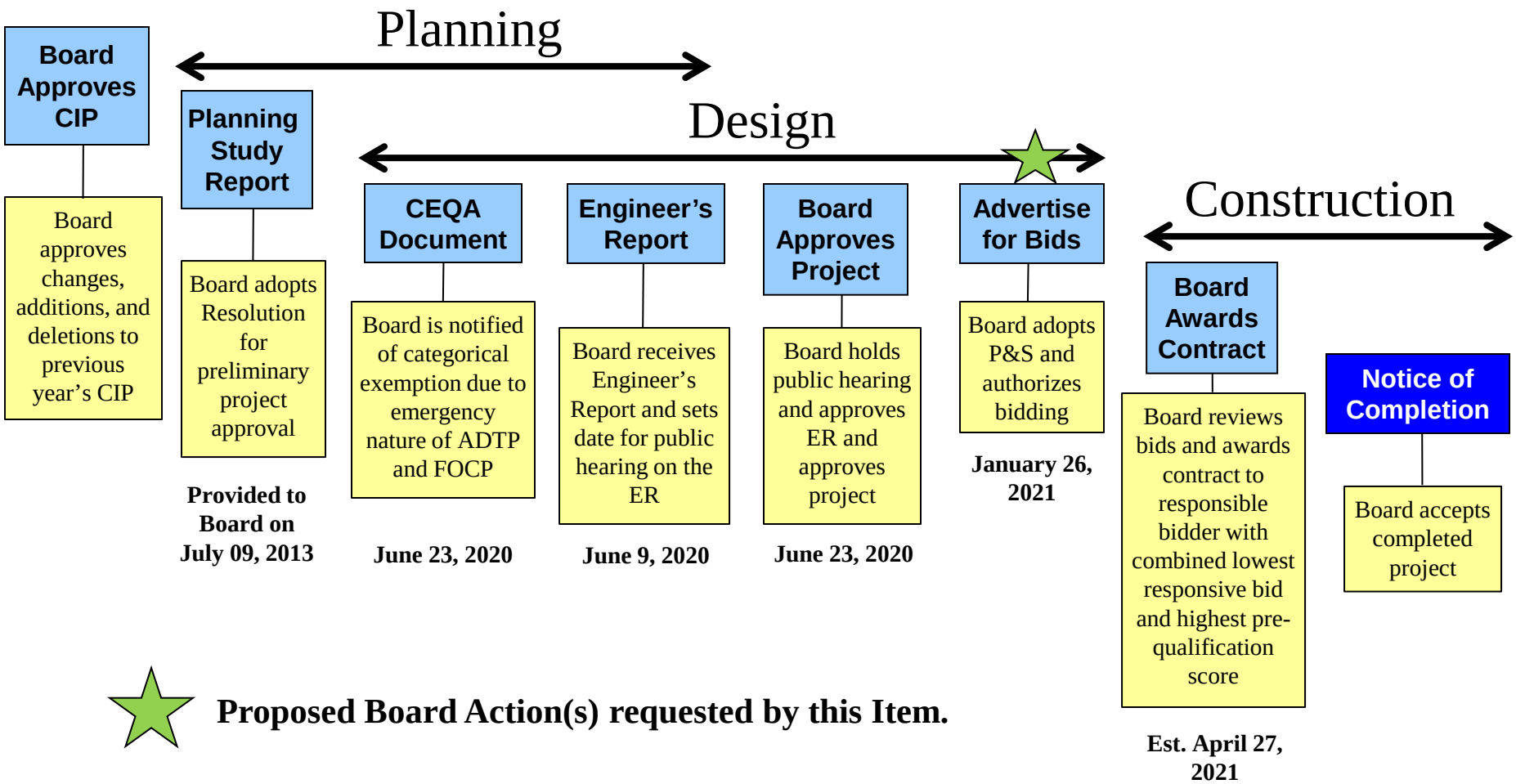

THIS PAGE INTENTIONALLY LEFT BLANK

Santa Clara Valley Water District

File No.: 21-0081

Agenda Date: 1/26/2021
Item No.: *3.3.

SUPPLEMENTAL BOARD AGENDA MEMORANDUM

SUBJECT:
Adopt Plans and Specifications and Authorize Advertisement for Bids for the Anderson Dam Tunnel Project (Project), Project No. 91864005, Contract No. C0663 (Morgan Hill) (District 1).

REASON FOR SUPPLEMENTAL MEMORANDUM:
This update conveys additional information received after the initial report was released, consistent with Executive Limitations Policy EL-7-10-5.

RECOMMENDATION:
A. Adopt the plans and specifications and authorize advertisement for bids for the construction of the Anderson Dam Tunnel Project, per the Notice to Bidders exclusively to the list of Valley Water pre-qualified bidders; and
B. Authorize the Designated Engineer to issue addenda, as necessary, during bidding.

SUMMARY:
This Supplemental Board Agenda Memorandum updates the item to include the confidentiality requirements imposed by the Federal Energy Regulatory Commission (FERC) when Valley Water distributes the plans and specifications for the Project. See Supplemental Attachment 1, Notice to Bidders and Supplemental Attachment 2, Non-Disclosure Agreement.

All prequalified Contractors and parties to whom they provide the Contract Documents, will be required to first complete a Non-Disclosure Agreement (NDA/PNDA) in order to access these documents.

The Notice to Bidders has been updated to inform interested parties that an NDA will be required prior to the plans and specifications being provided. A form of the NDA is provided as Supplemental Attachment 2.

These attachments are being submitted for the Board’s consideration pursuant to the recommended action.

FINANCIAL IMPACT:
No change.

CEQA:
No change.

ATTACHMENTS:
*Supplemental Attachment 1: Notice to Bidders
*Supplemental Attachment 2: Non-Disclosure Agreement

UNCLASSIFIED MANAGER:
Christopher Hakes, 408-630-3796

ANDERSON DAM TUNNEL PROJECT

Project No. 91864005

Contract No. C0663

1. Notice. **Due to the County of Santa Clara Public Health Officer's Order, the Santa Clara Valley Water District offices remain closed to the public until further notice**.

Notice is hereby given that sealed Bids will be received by the Construction Program of the Santa Clara Valley Water District (District), delivered either by a third party carrier such as FED EX, UPS, DHL, Overnight, Golden State Overnight, etc. or by hand delivery, at the District's Winfield Warehouse Building located at 5905 Winfield Boulevard, San Jose, California 95123-2428 only between the hours of 1:00 p.m. to 2:00 p.m. on **Wednesday, March 10, 2021**, for furnishing all material and performing all work necessary for construction of Anderson Dam Tunnel Project, within the Cities of Morgan Hill, California, and San Jose, California, and within Unincorporated Santa Clara County, California.

NO BIDS WILL BE ACCEPTED VIA USPS (US MAIL).

Additional information and Instructions to Bidders are posted on the District's Construction Administration webpage: https://www.valleywater.org/construction.

2. California State Department of Industrial Relations Contractor and Subcontractor Registration Requirements.

California Labor Code Section 1771.1 requires:

A contractor or subcontractor shall not be qualified to bid on, be listed in a bid proposal, subject to the requirements of Section 4104 of the Public Contract Code, or engage in the performance of any contract for public work, unless currently registered and qualified to perform public work pursuant to Section 1725.5 of the California Labor Code.

An inadvertent error in listing a subcontractor who is not registered pursuant to Section 1725.5 in a bid proposal shall not be grounds for filing a bid protest or grounds for considering the bid nonresponsive, provided that any of the following apply:

A. The subcontractor is registered prior to the bid opening.

B. Within 24 hours after the bid opening, the subcontractor is registered and has paid the penalty registration fee.

C. The subcontractor is replaced by another registered subcontractor pursuant to Section 4107 of the Public Contract Code within 24 hours after the bid opening.

3. Summary of Work

A. Project Description. The project scope, in accordance with the Contract Documents, includes the following:

- Full compliance with federal, state, and local laws, orders, ordinances, and various agencies permit's terms and conditions, as required to construct the project;
- Furnish a qualified biologist, certified and licensed arborist, and licensed geologist as required for the project;
- Compliance with NPDES Construction General Permit, including SWPPP preparation, and installation of Best Management Practices (BMPs);
- Installation of a temporary soundwall to reduce construction noise to the surrounding businesses and residences;
- Proper excavation, handling, and placement in the on-site disposal area of naturally occurring asbestos containing materials;
- Control of water, including the design, implementation, and maintenance of dewatering facilities;
- Mobilization, including, but not limited to the installation of fully operational temporary trailers/office facilities;
- Demobilization, including, but not limited to the removal and/or legal disposal of all temporary facilities;
- Implement and maintain public safety measures, including, but not limited to installation of temporary fencing at the perimeter of the work areas;
- Clearing and grubbing within the project limits, including demolition, the removal of trees, vegetation, concrete, and other miscellaneous items;
- Surveying, grade control, and construction staking;
- The Installation and monitoring of portal and tunnel instrumentation;
- Establishment of site access roads, staging areas, and disposal areas;
- Excavation and reinforcement of the downstream tunnel portal;
- Dredging and preparation of the upstream portal;
- Excavation and initial support of the 18.5-foot tunnel, 24-foot tunnel, and the micro-tunnel boring machine (MTBM) launch chamber;
- Driving of the 8-foot MTBM tunnel lake-tap from the launch chamber to Anderson Reservoir;

- Excavation and initial support of the High-Level Outlet Works (HLOW) drop shaft;
- Installation of the final reinforced concrete lining in the MTBM launch chamber and the 24-foot tunnel;
- Installation of steel pipe in the diversion tunnel and HLOW drop shaft;
- Construction of the diversion outlet structure;
- Construction of the upstream trash rack structure below water;
- Installation of steel pipe, displacement couplers, two 132-inch butterfly valves, two 132-inch fixed cone valves, and other mechanical equipment at the diversion outlet structure;
- Installation of electrical components, instrumentation and controls;
- Testing of diversion system;
- Construction of the Coyote Creek channel improvements including the outlet discharge channel, the northern channel, and the reinforced concrete weirs in the northern and southern channels;
- Installation of landscape and landscape maintenance. Landscape maintenance includes maintenance during the landscape installation and maintenance during the one-year establishment period following the landscape installation;
- Provide all the necessary traffic control, traffic control signage, devices, etc. as required for temporary road work, including closures;
- Furnishing and Installation of permanent fencing and gates;
- Utility coordination and installation including, but not limited to raw water line facilities overhead and underground electrical facilities;
- Non-native plant control;
- Revegetation (hydroseeding);
- Other miscellaneous construction work and items necessary to satisfactorily complete the project work.

B. Sole Source Products. None.

4. Basis of Award.

Valley Water Board of Directors adopted Resolution No. 20-70 Approving Best Value Contractor Selection for the Anderson Dam Tunnel Project on August 25, 2020. A

"value" will be established for each bid submitted, determined by evaluation of objective criteria based on price (cost), and qualification (competency, capability, capacity to complete a project of similar size, scope, complexity, recently performed similar projects, references to verify past performance, history of regulatory compliance, bonding capacity, and ability to meet insurance requirements).

The "value" is established by a number, which is calculated by dividing each bidder's price (P) by its qualification (Q) score. When the calculated individual numbers (for each bid) are arranged in ascending order, from lowest to highest, the lowest number becomes or is ranked as the "Best Value" bid, followed by the next highest number and so on. The formula as detailed in the Prequalification Application, Revision 2, Appendix D Calculating a Bidder's Best Value Score, will be used to calculate the qualifications score to weigh quality at 40% and price at 60%.

5. **Contract Time**. Time limit for the completion of the Work is **1,050** calendar days. See Contract Documents, Special Provisions, Article 12.03. Contract Time(s) for Milestones and Contract Times.

6. **Liquidated Damages**. See Standard Provisions, Liquidated Damages, Article 5.08 and Special Provisions, Liquidated Damages, Article 12.05 of the Contract Documents for requirements regarding Liquidated Damages.

7. **Estimated Cost**. The estimated cost of the Project is between $175 million and $225 million. This estimate is intended to serve merely as an indication of the magnitude of the Work. Neither the Bidder(s) nor the Contractor will be entitled to pursue a claim or be compensated due to variance in the stated estimated cost range.

A. **Additive/Deductive Bid Items**. **[NOT USED]**.

B. **Supplemental Bid Items**. These Bid Items may or may not be required. Supplemental Bid items include development of staging areas and access roads, excavation, grading, soil nail installation, instrumentation installation to remediate two existing landslides located along the southwestern reservoir rim and excavation, grading, reinforced concrete, soil nail installation, and other miscellaneous work to strengthen the existing sloping intake located on the left abutment upstream of Anderson Dam. The Supplemental Bid Items may be deleted entirely or in part, by deductive change order(s), at the sole discretion of the District.

8. **Contractor's License Requirement**. The Bidder must possess a current **Class A** Contractor's license issued by the California Department of Consumer affairs, Contractor's State License Board when the Bid is submitted. Regardless of whether a subcontractor must be identified at the time of Bid, each subcontractor must also be properly licensed to perform its scope of Work.

9. Pre-Bid Conference and Site Visit. A Pre-Bid conference/site visit will be conducted by the District on **Wednesday, February 17, 2021**. The Pre-Bid conference/site visit will convene at 10:00 a.m. (by District time), at the parking lot at the toe of Anderson Dam at 2499 Cochrane Road, Morgan Hill, CA 95027 (APN 729-48-001). Attendance at the Pre-Bid conference/site visit by subcontractors is not required.

Attendance by the Bidder at the Pre-Bid conference/site visit is:

☐ Mandatory

☒ Optional

The objective of the Pre-Bid conference/site visit is to familiarize prospective Bidders with the site; no additional site visits will be allowed. Please confirm your intent to attend the Pre-Bid conference/site visit 24 hours in advance by sending an email to scvwdplanroom@valleywater.org.

Additional information regarding the Pre-Bid conference/site showing will be sent to all prospective Bidders who confirm their intention to attend.

In response to the COVID-19 pandemic, the District will require that all participants adhere to the orders of Social Distancing. All persons attending the Pre-Bid conference/site visit are required to adhere to the orders of Social Distancing and are also required to bring and wear the appropriate Personal Protection Equipment (PPE), i.e., protective face covering, in order to be allowed entrance onto the site and to remain on the site.

Reasonable efforts will be made to accommodate persons with disabilities wishing to attend the Pre-Bid conference/site visit. Please request accommodations when confirming attendance.

10. Availability of Bid Documents

Due to the County of Santa Clara Public Health Officer's Order, District offices will remain closed to the public until further notice.

The Project Plans and Specifications are considered by the Federal Energy Regulatory Commission as including highly sensitive, confidential information pertaining to critical infrastructure. Therefore, all prequalified Contractors must complete and execute the Non-Disclosure Agreement (NDA) before access to the Contract Documents will be provided. Contractors must also require any party to whom they provide access to the Contract Documents (such as subcontractors in all tiers and suppliers) to first complete and execute a Personal Non-Disclosure Agreement (PNDA) and provide Valley Water with a copy of the signed Agreement.

A copy of the NDA / PNDA form can be obtained at the Valley Water website: https://www.valleywater.org/construction. The completed form must be submitted by email at scvwdplanroom@valleywater.org.

The Contract Documents are only available in electronic (PDF) format. The electronic version is free and will be transferred via file transfer appliance (FTA) site.

11. **Inquiries**. The Bidder must submit all requests for clarification, or interpretation of the Bid Documents in accordance with the requirements stated in Instructions to Bidders, paragraph #7. Questions During Bidding. Written questions must be directed to the Contracts Administrator at scvwdplanroom@valleywater.org and submitted at least nine (9) calendar days before the deadline for receipt of Bids.

The District may issue written Addenda as appropriate for clarification or other purposes during the bidding period. Addendum notification(s) will be sent to each planholder at the email address provided by the contractor for the planholders list and addenda will be posted on the District's website at https://www.valleywater.org/construction.

A. **Project Manager**. The District's project manager for this Project is Mr. Bal Ganjoo.

B. **Process Questions**. For questions regarding the bid process, please contact the District Plan Room by email at scvwdplanroom@valleywater.org.

12. **Prevailing Wage Requirements**

A. Workers employed on this Project must be paid at rates at least equal to the prevailing wage rates as determined by the State of California Department of Industrial Relations pursuant to Section 1770 *et seq.* of the Labor Code. Said wage rates are incorporated herein by reference and are available on the State of California Department of Industrial Relations website at: http://www.dir.ca.gov/. See Standard Provisions, Prevailing Wages Article 4.04. through Apprentices Article 4.06. for related requirements.

Due to the County of Santa Clara Public Health Officer's Order, District offices will remain closed to the public until further notice. The wage rates are therefore not currently available for review at District offices.

B. This Project is subject to compliance monitoring and enforcement by the State of California Department of Industrial Relations. The Contractor and subcontractors must furnish the records specified in California Labor Code Section 1776 directly to the Labor Commissioner, in the following manner: monthly, in a format prescribed by the Labor Commissioner.

13. **Bid Proposal Submittal**. All Bids must be submitted in sealed envelopes addressed to the Santa Clara Valley Water District. Attention: Construction Programs and state the Project name and Project number on the outside of the sealed envelope. Each Bid must be submitted on the prescribed Bid Forms. All information on Bid Forms must be completed in ink.

A. **Bid Submittal Delivery**. Bidders are allowed to submit a bid proposal by third party carrier or by hand delivery.

THIRD PARTY CARRIER such as: FEDEX, UPS, DHL, CA Overnight, Golden State Overnight, etc., and must address the submittal in accordance with instructions stated in this paragraph 12. Any Proposal received after 2 p.m. will not be considered. Late Bids will be returned unopened.

HAND DELIVERY shall only be between the hours of 1:00 p.m. - 2:00 pm. on the bid due date, at the Winfield Warehouse located at 5905 Winfield Boulevard, San Jose, CA 95123. Upon entrance to the gate, turn left towards the warehouse building. Bid submittal shall be delivered at a drop off box, marked "Bid/Submittal Drop Box," located in front of the warehouse entrance door. Bidder's must take a picture using its cellphone showing the "Official Bid Clock" timer as proof of delivery. Bidders must observe all Public Health Officers orders and wear proper face covering when dropping off your Bid.

Any Proposal received after 2 p.m. will not be considered. Late Bids will be returned unopened.

NO BIDS WILL BE ACCEPTED VIA USPS (US MAIL). USPS (US Mail) does not deliver to 5905 Winfield Boulevard.

Address the outside delivery envelope as follows:
Santa Clara Valley Water District
Attention: Construction Contracts & Support Unit
C0663 – Anderson Dam Tunnel Project
Project No. 91864005
5905 Winfield Boulevard
San Jose, CA 95123-2428

14. **Bid Opening**. For the duration of the COVID-19 pandemic, to ensure the safety of the public and District employees and requisite social distancing requirements by Order of the County of Santa Clara Public Health Officer, the opening of bids shall be made available to the public only by video teleconference, live-stream, on the date stated in this Notice to Bidders, paragraph #1. Notice, above, at **2:30 p.m.** The results will be posted on the District's website at https://www.valleywater.org/construction no later than close of business the following day.

A. **Join Zoom Meeting**. Any person interested in attending the live-stream bid opening, may do so by accessing the link below, or join via phone by calling the toll-free number listed below:

Join Zoom Meeting: https://valleywater.zoom.us/j/3796054075

Meeting ID: 379 605 4075

One tap mobile:
+16699009128, 3796054075# US (San Jose)
+13462487799, 3796054075# US (Houston)

Dial by your location:
+1 669 900 9128 US (San Jose)
+1 346 248 7799 US (Houston)
+1 253 215 8782 US (Tacoma)
+1 646 558 8656 US (New York)
+1 301 715 8592 US (Germantown)
+1 312 626 6799 US (Chicago)

Meeting ID: 379 605 4075

Find your local number: https://valleywater.zoom.us/u/aekffBkBma

15. **Errors or Discrepancies in the Bids**. The District Board of Directors reserves the right to reject any and all Bid Proposals and to waive minor defects or irregularities in any submitted Bid Form(s).

16. **Bidder's Security**. Each Proposal must be accompanied by cash, a certified check, cashier's check, or an original Bidder's bond in the sum of not less than 10 percent of the total aggregate of the Proposal including all additive and supplemental Bid items, if any. Said checks or bond must be made payable to the Santa Clara Valley Water District.

17. **Contract Retention**

☒ The Contract Retention for this Project is established at five (5) percent of the Contract Price.

☐ The Contract Retention for this Project is established at ten (10) percent of the Contract Price. The Board of Directors has made a finding that the Project is substantially complex and therefore requires retention higher than five percent.

18. **Substitution of Securities**. The Contractor may, at the Contractor's request and expense substitute securities equivalent to the amount withheld by District to ensure the performance of the contract, in accordance with Public Contract Code Section 22300.

19. **Small Business Preference. [NOT USED]**.

20. **Rights of Way.** It is anticipated that easement acquisition from the County of Santa Clara to construct the Coyote Creek modifications portion of the Project will be finalized before April 2021. The construction contract will not be awarded by Valley Water until all required Rights of Way are secured.

21. **Permits.** It is anticipated that all permits necessary for construction of the Project will be finalized before April 2021. The construction contract will not be awarded by Valley Water until all required Permits are obtained.

22. **Equal Opportunity**. The District is an equal opportunity employer and all Contractors of District projects are to have and follow a policy of equal opportunity including adherence

to all state and federal laws and regulations, including the Federal Equal Opportunity Clause.

By order of the Board of Directors of the Santa Clara Valley Water District, San Jose, California, on Tuesday, January 26, 2021.

ATTEST: MICHELE L. KING, CMC

_____
Clerk, Board of Directors

SANTA CLARA VALLEY WATER DISTRICT
NON-DISCLOSURE AGREEMENT

This Agreement is between the Santa Clara Valley Water Valley Water (hereinafter "Valley Water"), and ("Receiving Party") identified as:

_____
(Full exact legal name -- whether corporation, LLC, partnership, individual natural person.)

_____
(Street Address, City, State, Zip, Country)

Now, in consideration of the mutual covenants herein contained, Valley Water and Receiving Party agree as follows:

1. **Purpose**. This Agreement is to protect Valley Water from the misuse or disclosure of Valley Water confidential or proprietary information that is disclosed in connection with Receiving Party performing work for the Valley Water.

2. **Confidential Information:** Valley Water confidential information includes the following:

   A. **Information Technology Data and Information,** including but not limited to, proprietary, internally-developed Valley Water computer models and algorithms, rule curves, and programs, non-public network and system information, District software code, licensed computer software and other information technology programs, apps, or customized hardware or software, licensed or purchased third-party data and information maintained on Valley Water servers or computers.

   B. **Employee Personnel Information**, including but not limited to, employees' personnel files (including but not limited to performance reviews and/or disciplinary information), spouse and family information or other emergency contact person information, home addresses, Social Security Numbers, telephone numbers, personal email addresses, driver's license information, tax withholding information, resumes, job application, etc.

   C. **Critical Infrastructure or Sensitive Security Information**, such as detailed designs, specifications, vulnerability assessments, and location information concerning dams, water treatment or purification plants, pipelines, etc. This includes information that is not customarily in the public domain and relates to the security of critical infrastructure or protected systems and includes information regarding systems, facilities, or operational security, or that is proprietary, business sensitive, or which might be used to plan or carry out a terrorist attack. Sensitive security information includes information about security, protocols, operations, facilities or other assets or capital projects whose disclosure would be detrimental to the security of Valley Water's employees or patrons, or would invade an individual's privacy, or reveal trade secrets or privileged or confidential information.

   D. **Utility Usage Records** and non-public financial information of any District customer or client.

   E. **Information Designated or Communicated as Confidential,** meaning all information that Valley Water protects against unrestricted disclosure to others and which: (i) if in written or other tangible form, is clearly designated as "Confidential" or "Proprietary"; and (ii) if disclosed orally, is designated to be "Confidential" at the time of its disclosure or which under the circumstances surrounding disclosure ought to be treated as confidential. By way of illustration, but not limitation, confidential information may include equipment, products, inventions, concepts, designs, drawings, schematics, plans, production specifications, source code, libraries, agents, applets, script, Javascript, object classes, software architecture, object code, flowcharts, source listings, software-related documentation, databases, structures, formulas, algorithms, techniques, processes, circuits, computer disks or tapes whether machine or user readable, market data, financial information, data regarding suppliers and customers, and confidential information received from third parties. Such confidential information shall include all copies, reproductions, photographs, images, records, and extracts thereof, as well as all notes and summaries prepared by the Receiving Party from Information of the Disclosing Party which is Confidential Information.

F. **Other**. To the extent not already listed or described above, Valley Water also designates the following information as confidential information protected by this agreement: **_____.**

The information described above is hereinafter referred to as "Confidential Information."

3. **Exclusions/Not Confidential Information**. This Agreement does not apply to any information that: (a) was in Receiving Party's possession or was known to Receiving Party without an obligation to keep it confidential, before such information was disclosed to Receiving Party by Valley Water; (b) is or becomes public knowledge through a source other than Receiving Party and through no fault of Receiving Party; or (c) is disclosed by Receiving Party with Valley Water's prior written approval.

4. **Restrictions on Use of Confidential Information.** Receiving Party shall not directly or indirectly disclose, display, provide, transfer or otherwise make available any Confidential Information to any third party. In addition, Receiving Party shall not directly or indirectly disclose, display, provide, transfer or otherwise make available any Confidential Information to any other person, including to its own employees, consultants and/or independent contractors or subcontractors, unless: (a) such employee, consultant or contractor has a need to know such Confidential Information in order to perform work for Valley Water; *and* (b) such employee, consultant or contractor has signed the attached Personal Agreement to be Bound By Valley Water NDA (Attachment 1 hereto). Once any employee, subconsultant or subcontractor has signed Attachment 1, Receiving Party shall promptly provide Valley Water with an executed copy of such document. Except as specified above, Receiving Party may not disclose any Confidential Information to any person or business entity. Receiving Party shall not make copies of Confidential Information or any portion thereof, including electronic copies. Receiving Party acknowledges that Confidential Information may be utilized only in accordance with providing services to Valley Water.

5. **Safeguarding of Confidential Information**. Receiving party shall take all necessary measures to ensure that any Confidential Information it receives is maintained as confidential and safeguarded from unauthorized copying or distribution. Receiving Party shall encrypt or password-protect all Confidential Information that is electronic data, and store hard copies in a locked secure location. Receiving Party agrees that it shall treat all Confidential Information with at least the same degree of care as it accords its own confidential information, but not less than a reasonable degree of care.

6. **Confidential Information Property of Valley Water**. All Confidential Information delivered pursuant to this Agreement shall be and remain the property of Valley Water. Nothing herein shall be construed as granting or conferring any rights by license or otherwise, express or implied, regarding any idea made, conceived or acquired prior to or after the Effective Date, nor as granting any right with respect to the use or marketing of any product or service. The Parties shall use the Confidential Information only for the Business Relationship.

7. **Violation of Agreement**. Receiving Party acknowledges that Valley Water, because of the unique nature of the Confidential Information, would suffer irreparable harm in the event that Receiving Party breaches its obligation under this Agreement in that monetary damages would be inadequate to compensate Valley Water for such breach. Receiving Party agrees that in such circumstances, Valley Water shall be entitled, in addition to monetary relief, to injunctive relief as may be necessary to restrain any continuing or further breach by Receiving Party, without showing or approving any actual damages sustained by Valley Water. In the event either Party is required to enforce this Agreement through legal action, the prevailing party will be entitled to recover from the other Party all costs incurred thereby, including without limitation, reasonable attorney's fees.

8. **Indemnification**. Receiving Party agrees to indemnify Valley Water against any and all losses, damages, claims or expenses incurred or suffered by Valley Water as a result of Receiving Party's breach of this Agreement.

9. **Return or Destruction of Confidential Information**. Receiving Party shall promptly, upon request, return to Valley Water, or, at Valley Water's option, destroy, any documents or media containing or reflecting Confidential Information, and all copies thereof. Receiving Party agrees to erase, delete or destroy any notes, documents, magnetic media, or other computer storage, including system backups that contain any

Confidential Information copies or derived from the Confidential Information. Receiving party shall provide written verification to Valley Water of such destruction. The obligation to return or, upon request, destroy Confidential Information shall survive the completion or abandonment of the business relationship and remain binding for a period of ten (10) years* after such completion or abandonment.

10. **Notice of Disclosure**. Receiving Party shall notify Valley Water within 24-hours of any unauthorized disclosure, loss of Confidential Information and shall further take all reasonable steps to retrieve and prevent further unauthorized disclosure of such proprietary information. Such disclosure of a loss shall in no way limit Valley Water's remedies under this Agreement including, but not limited to, immediate injunctive relief. Notwithstanding the foregoing, nothing herein shall restrict the right of Receiving Party to disclose such Confidential Information that is disclosed pursuant to a judicial order, but only to the extent so ordered, provided, however, that Receiving Party receiving such order shall notify Valley Water of such order in sufficient time to permit Valley Water to intervene in response to such order and provided that the confidential or proprietary markings remain on the information disclosed.

11. General

11.1 **Entire Agreement**. This Agreement sets forth the entire understanding and agreement between the parties hereto as to the subject matter of this Agreement and supersedes any previous communications, negotiations, warranties, representations, and prior non-disclosure agreements, either oral or written, with respect to obligations of confidentiality of the subject matter hereof, and no addition or modification of this Agreement shall be binding on either party hereto unless reduced to writing and duly executed by each of the parties hereto.

11.2 **Applicable Law/Disputes**. This Agreement is governed by the laws of the State of California. In any dispute arising out of this Agreement, the parties hereby consent to personal and exclusive jurisdiction and venue in the State and Federal Courts in Santa Clara County, California.

11.3 **Survival of Receiving Party's Obligations**. All obligations of Receiving Party under this Agreement shall survive the return of the Confidential Information and termination of this Agreement.

11.4 **Authority**. The undersigned individuals represent that they have the authority to enter into and bind the parties to this Agreement.

RECEIVING PARTY:	**SANTA CLARA VALLEY WATER DISTRICT**:
By: _____ (Signature)	**By**: _____ (Signature)
Name: _____ (Printed)	**Name**: _____ (Printed)
Title: _____	**Title**: _____
Date: _____	**Date**: _____

*Changed from District standard NDA of 1 year for this project

I acknowledge that I have read and understood, and agree to be bound by, the attached Santa Clara Valley Water Valley Water Non-Disclosure Agreement ("NDA") entered into between the Santa Clara Valley Water District ("Valley Water") and _____ ("Receiving Party") ("NDA").

I acknowledge that Valley Water may make available to me from time to time certain information that is highly confidential to Valley Water, as defined in the attached NDA ("Confidential Information"). I acknowledge that such information is sensitive and agree that I will not disclose this Confidential Information to any person, firm, corporation, association, or partnership without the express written permission of Valley Water, including other employees, consultants or independent contractors or subcontractors of Receiving Party that do not have a need to know such information.

I will at all times hold all of Valley Water's Confidential Information in trust and in the strictest confidence. This obligation shall continue after any and all business engagement(s) working with Valley Water has ended. I will prevent the impermissible release of Valley Water's Confidential Information. I will neither copy, retain nor incorporate any Confidential Information into any database or any medium other than as may be required for Valley Water's exclusive benefit. I will not duplicate or disclose or otherwise reveal such Confidential Information in any manner inconsistent with the NDA.

I will not perform any illegal acts with respect to the Confidential Information, and I will not share the password or account access provided exclusively to me. When leaving a workstation unattended, or out of sight, I will save my work and log off or lock the workstation to prevent unauthorized access. I will make no attempt to circumvent access codes or information protection schemes or uncover security loopholes or attempt to break authentication procedures or encryption protocols. I will make no attempts to increase the level of access to which I have been authorized. I will not attempt to use or obtain access codes in an unauthorized manner or from another user. I will not allow non-employees to access Valley Water computer systems.

I acknowledge that my faithful compliance with this NDA is necessary to protect Valley Water and that any action on my part that is inconsistent with this NDA will cause Valley Water irreparable and continuing harm. If I violate this NDA, I understand and agree that Valley Water may take action against me personally, including but not limited to, instituting a legal proceeding and seeking any court relief.

PLEASE COMPLETE THE FOLLOWING SECTION (PLEASE PRINT):

Full Name:	
Receiving Person's Name:	
Receiving Person's Employer, Agent or Contractor:	
Phone No.:	Fax No.:
Email Address:	
What District units/department(s) do you work with?	
Signature:	Date:

Santa Clara Valley Water District

File No.: 21-0076

Agenda Date: 1/26/2021
Item No.: *3.4.

BOARD AGENDA MEMORANDUM

SUBJECT:
Approval of Minutes.

RECOMMENDATION:
Approve the minutes.

SUMMARY:
In accordance with the Ralph M. Brown Act, a summary of Board discussions, and details of all actions taken by the Board, during all open and public Board of Directors meetings, is transcribed and submitted to the Board for review and approval.

Upon Board approval, minutes transcripts are finalized and entered into the District's historical records archives and serve as historical records of the Board's meetings.

FINANCIAL IMPACT:
There is no financial impact associated with this item.

CEQA:
The recommended action does not constitute a project under CEQA because it does not have a potential for resulting in direct or reasonably foreseeable indirect physical change in the environment.

ATTACHMENTS:
Attachment 1: 112420 Regular Meeting Minutes
*Attachment 2: 120820 Regular Meeting Minutes
*Attachment 3: 121520 Special Meeting Minutes
*Attachment 4: 010521 Special Meeting Minutes

UNCLASSIFIED MANAGER:
Michele King, 408-630-2711

THIS PAGE INTENTIONALLY LEFT BLANK

BOARD OF DIRECTORS MEETING

MINUTES

CLOSED SESSION AND REGULAR MEETING
TUESDAY, NOVEMBER 24, 2020
4:00 PM

(Paragraph numbers coincide with agenda item numbers)

1. CALL TO ORDER:

A Closed Session and Regular Meeting of the Santa Clara Valley Water District (Valley Water) Board of Directors was called to order in the Valley Water Headquarters Building Boardroom at 5700 Almaden Expressway, San Jose, California, at 4:00 p.m.

1.1 Roll Call.

Board members in attendance were Tony Estremera, Nai Hsueh, and Richard Santos. Board members participating by teleconference were Barbara Keegan, Gary Kremen, Linda J. LeZotte, and John L. Varela, constituting a quorum of the Board.

Staff in attendance was M. Overland, Assistant Deputy Clerk II. Staff participating by teleconference were R. Callender, Chief Executive Officer, S. Yamamoto, District Counsel, M. Meredith, Acting Clerk, Board of Directors, J. Aranda, A. Baker, M. Cook, G. De La Piedra, R. Gibson, A. Gordon, A. Gschwind, B. Hopper, L. Orta, M. Richardson, D. Rocha, D. Taylor, S. Tippets, B. Yerrapotu, and T. Yoke.

2. TIME CERTAIN:

4:00 PM

Chairperson Hsueh confirmed that Item 2.1 had been removed from the agenda, and that the Board would adjourn to Closed Session for consideration of Items 2.2 through 2.4.

Upon return to Open Session, the same Board members and staff were present.

2.1 (ITEM REMOVED FROM AGENDA)
CLOSED SESSION (Continued from November 10, 2020)
CONFERENCE WITH LEGAL COUNSEL - INITIATION OF LITIGATION
Pursuant to Government Code Section 54956.9(d)(4) - Six Potential Cases

2.2 CLOSED SESSION
CONFERENCE WITH LABOR NEGOTIATORS
Pursuant to Government Code Section 54957.6(a)
Agency Designated Representatives: Rick Callender, Laura Harbert, Tina Yoke, Ingrid Bella
Employee Organizations: Employees Association, Engineers Society, Professional Managers Association

2.3 CLOSED SESSION
CONFERENCE WITH LEGAL COUNSEL
Pursuant to Government Code Section 54957(a)
THREAT TO PUBLIC SERVICES OR FACILITIES - Consultation with Alex Gordon, Assistant Officer

2.4 CLOSED SESSION
PUBLIC EMPLOYEE EMPLOYMENT
Pursuant to Government Code Section 54957(b)(1)
Title: District Counsel

6:00 PM

2.5 District Counsel Report on Closed Session.

Mr. Brian Hopper, Senior Assistant District Counsel, reported that the Board met in Closed Session with all members present and, in regard to Items 2.2 and 2.3, gave direction to staff.

There was no reportable action on Item 2.4.

2.6 Pledge of Allegiance/National Anthem.

Mr. Hopper led all present in reciting the Pledge of Allegiance.

2.7 Orders of the Day.

Chairperson Hsueh confirmed that there were no changes to the Orders of the Day.

2.8 Time Open for Public Comment on any Item not on the Agenda.

Chairperson Hsueh declared time open for public comment on any item not on the agenda. There was no one present who wished to speak.

2.9 Receive Winter Preparedness Briefing.

Recommendation: Receive information on the Santa Clara Valley Water District's preparedness for winter operations.

Mr. Alexander Gordon, Assistant Officer, reviewed the information on this item, per the attached Board Agenda Memo, and the corresponding presentation materials contained in Attachment 1 were reviewed, as

follows: Mr. Gordon reviewed Slides 1-2 and 4-17 and Mr. Brian Garcia, National Weather Service, reviewed Slide 3.

The Board noted the information without formal action.

Director Kremen momentarily concluded his participation by teleconference and rejoined as noted below.

3. CONSENT CALENDAR:

The Board considered Consent Calendar Items 3.1 through 3.3, under one motion.

3.1 Consider Membership Nominations for Committee Appointments to the Environmental and Water Resources Committee, and the Safe, Clean Water Independent Monitoring Committee.

Recommendation: Consider Committee Membership Appointment Nominations to the Environmental and Water Resources Committee (EWRC), and the Safe, Clean Water Independent Monitoring Committee (SCW IMC).

3.2 Amendment to Employment Agreement Between Santa Clara Valley Water District and Stanly Yamamoto.

Recommendation:
A. Adopt the RESOLUTION APPROVING AND ADOPTING NOVEMBER 24, 2020 AMENDMENT TO EMPLOYMENT AGREEMENT BETWEEN SANTA CLARA VALLEY WATER DISTRICT AND STANLY YAMAMOTO; and
B. Authorize the Chair of the Board to execute November 24, 2020 Amendment to Employment Agreement Between Santa Clara Valley Water District and Stanly Yamamoto.

3.3 Accept the CEO Bulletin for the Weeks of November 6-19, 2020.

Recommendation: Accept the CEO Bulletin.

Motion: Approve Consent Calendar Items 3.1 through 3.3, by one motion, as follows: approve the Committee membership appointment nominations to the EWRC and the SCW IMC, as contained in Item 3.1; adopt Resolution No. 20-92, APPROVING AND ADOPTING NOVEMBER 24, 2020 AMENDMENT TO EMPLOYMENT AGREEMENT BETWEEN SANTA CLARA VALLEY WATER DISTRICT AND STANLY YAMAMOTO, by roll call vote and approve the amendment to employment agreement of S. Yamamoto, as contained in Item 3.2; and accept the CEO Bulletin, as contained in Item 3.3.

Move to Approve:	Richard Santos
Second:	Tony Estremera
Yeas:	John L. Varela, Tony Estremera, Nai Hsueh, Barbara Keegan, Linda J. LeZotte, Richard Santos
Nays:	None
Abstains:	None
Recuses:	None
Absent:	Gary Kremen
Summary:	6 Yeas; 0 Nays; 0 Abstains; 1 Absent.

Director Kremen rejoined the meeting by teleconference.

REGULAR AGENDA:

4. BOARD OF DIRECTORS:

4.1 Discuss Establishment of a Board Budget Committee.

Recommendation: Support 2020 Board Chair Hsueh's Recommendation to Not Establish a Board Budget Committee.

Chairperson Hsueh reviewed the information on this item, per the attached Board Agenda Memo.

The Board noted Chairperson Hsueh's recommendation to not establish a Budget Committee, without formal action.

4.2 Discuss Board of Directors Governance Policy Governance Process GP-5.3, Election of Board Chair and Board Vice Chair.

Recommendation:
A. Discuss Board of Directors Governance Policy Governance Process GP-5.3, Election Board Chair and Board Vice Chair; and
B. If necessary, make changes as identified.

Director Santos reviewed the information on this item per the attached Board Agenda Memo, and Chairperson Hsueh reviewed the existing parameters set forth in Board Governance Process GP-5.3.

Directors Estremera, Kremen, and Santos expressed support for revising Board Governance Process GP-5.3 to allow flexibility in the nomination and election of Board Chair and Vice Chair; to align the Board's process of electing its Chair and Vice Chair with revisions being made by governing bodies of other local government agencies; and to allow the Board to consider 2- and 3-year Board Chair and Vice Chair terms.

Directors Keegan, LeZotte, and Varela expressed support for maintaining Board Governance Process GP-5.3, as currently written.

Motion: Adopt revisions to Board Governance Process GP-5.3 that specifies that the Board Chair and Vice Chair are nominated and elected annually, by vote of the full Board.

Move to Adopt: Richard Santos
Second: The motion did not receive a second and was lost.

Chairperson Hsueh confirmed that she would review the comments expressed herein, and come back with continued discussion and proposals that address Board concerns.

Chairperson Hsueh reviewed the information on Items 4.3, 4.4, and 4.5, per the attached Board Agenda Memos.

4.3 Consider the Board Ethics and Conduct Ad Hoc Committee Recommendations to Approve Amendments to Board of Directors Governance Policies GP-6.11.1 and GP-6.11.2, Complaints by Board Members Against Board Members, and GP-6.19.1 and GP-6.19.2, Complaints from Non-Board Members.

Recommendation:

A. Discuss Proposed Amendments to Board of Directors Governance Policies GP 6.11.1 and GP-6.11.2, Complaints by Board Members Against Board Members, and GP-6.19.1 and GP-6.19.2, Complaints from Non-Board Members; and
B. Approve the proposed amendments to GP-6.11.1 and GP-6.11.2, and GP-6.19.1 and GP-6.19.2.

Director LeZotte requested clarification on several matters, as follows:

- What is the rationale for authorizing the Committee to terminate an investigation, instead of maintaining that authority at the full Board?
- What criteria would the Committee use to determine when to terminate an investigation?
- Would there be a report out to the community and the Board as to why an investigation was terminated?
- What is the third-party manager who will manage the investigation; what criteria will be used to select that person; and will they have a legal background and investigative knowledge?
- What is the conflict that exists with District Counsel, to warrant authorizing the Committee to terminate an investigation?
- When will the current investigation be returned from its temporarily suspended status?
- When will the Board hear a report on the status of the current investigation?

- Is the matter on the Board's agenda today intended to legitimize actions already taken by the Committee that were outside their authorized purpose?

- Would adoption of the proposed policy revisions be applied to actions taken previously, retroactively?

Chairperson Hsueh acknowledged receipt of, and read into the record, the attached written comments from Ms. Trish Mulvey, Palo Alto resident, identified as Handout 4.3-A Herein; and Director LeZotte acknowledged receipt of the attached memorandum from Mr. Stan Yamamoto, District Counsel, responding to Board Member Request No. R-20-0012, Identified as Handout 4.3-B herein. Copies of the Handouts were distributed to the Board and made available to the public.

Chairperson Hsueh clarified that the Committee had given direction to District Counsel to temporarily suspend the investigation and come back to the full Board requesting authority to terminate investigations, as recommended in the attached Board Agenda Memorandum.

Directors Keegan and Varela expressed concern that because the Board Ethics and Conduct Ad Hoc Committee was a working group, and not subject to the Brown Act, sufficient transparency did not exist to enable authority, as proposed.

Directors Keegan and LeZotte suggested that the Board consider rescinding the Committee's decision to temporarily suspend the investigation, citing that the current Board policy did not authorize the Committee to take such an action; and Director Kremen questioned whether participation in the current policy discussion by Board members named in an investigation created a conflict of interest.

Mr. Yamamoto advised the Board that since consideration of rescinding the Board Ethics and Conduct Ad Hoc Committee's action to temporarily suspend the current investigation was not included on the agenda, the Board should take no such action to do so at this time. He additionally clarified that so long as the Board's discussion remained on the proposed policy revisions, and not on the current investigation, no conflict of interest existed by the participation of Board members named in the investigation.

Mr. Yamamoto confirmed that within current Board policies, the Board Chairperson does have authority to start or suspend investigations, as was done in this matter; and suggested the Board defer the matter back to its Chairperson to work with District Counsel to establish steps to move forward, having heard all Board members comments, questions, and concerns.

The Board continued the item to a future meeting.

4.4 Planning for the Year 2021-22 Board Strategic Planning Meeting.

Recommendation: Discuss and provide input to shape the agenda and process for the Board Strategic Planning Meeting for Fiscal Year 2021-22 (FY22).

The Board noted the information, without formal action.

4.5 Review Fiscal Year 2021 Board Policy Planning Calendar.

Recommendation: Review, discuss, and revise the Fiscal Year 2021 Board Policy Planning Calendar.

Chairperson Hsueh requested that staff revise the Fiscal Year 2021 Board Policy Planning Calendar contained in Attachment 1, on Page 1, Line 1, *Actively Pursue Water Storage Opportunities*, to include a sub-entry for the Pacheco Reservoir Expansion Project, and to add discussion on the roles and responsibilities of Valley Water Board Members who serve as board members of other agencies. She also confirmed that she would work with the Chief Executive Officer to revise the calendar's timelines for various critical items.

The Board noted the information, without formal action.

4.6 Board Committee Reports.

Chairperson Hsueh acknowledged receipt of the attached Board Audit Committee, Water Supply Exploratory Committee, Capital Improvement Program, Recycled Water Committee, Board Policy Planning Committee, Independent Monitoring Committee, and Delta Conveyance Authority meeting agendas and summaries identified as Handouts 4.6-A through 4.6-G herein. Copies of the Handouts were distributed to the Board and made available to the public.

The Board noted the information, without formal action.

4.7 Proposed Future Board Member Agenda Items.

None.

5. WATER UTILITY ENTERPRISE:

5.1 Overview of the FY 2021-22 Groundwater Production Charge Setting Process and Review of 10-Year Water Rate Projection Assumptions.

Recommendation:
A. Receive an overview of the Fiscal Year 2021-22 Groundwater Production Charge setting process; and
B. Review and provide feedback on the 10-year Water Rate Projection Assumptions.

Mr. Darin Taylor, Chief Financial Officer, reviewed the information on this item per the attached Board Agenda Memo, and Ms. Carmen Narayanan,

Finance Planning and Revenue Manager, reviewed the attached presentation materials contained in Attachment 1.

Directors Santos and Varela reported having requested that the Chief Executive Officer investigate various alternatives for maintaining the Open Space Credit, and Mr. Rick Callender, Chief Executive Officer, confirmed that staff would come back with discussion on the Open Space Credit early in calendar year 2021.

The Board noted the information, without formal action.

6. WATERSHEDS:

None.

7. ASSISTANT CHIEF EXECUTIVE OFFICER:

None.

8. EXTERNAL AFFAIRS:

8.1 Office of Civic Engagement Annual Board Update 2020.

Recommendation: Receive information and updates on the programs and activities in the Office of Civic Engagement.

Ms. Sherilyn Tran, Civic Engagement Manager, reviewed the information on this item, per the attached Board Agenda Memo.

The Board noted the information, without formal action.

9. CHIEF EXECUTIVE OFFICER:

9.1 CEO and Chiefs' Report.

Ms. Sue Tippets, Chief Operating Officer, reviewed the attached Stream Maintenance and Storm Reports, identified respectively as Handouts 9.1-C and 9.1-D herein.

Ms. Tina Yoke, Chief Administrative Officer, provided an update on the county's latest orders related to COVID-19, discussed the number of Valley Water employees currently out on COVID-related leave, and confirmed no overall impacts to Valley Water operations. She also advised the Board that the Valley Water Headquarters Campus parking lot had not been selected by the county as a location for mobile COVID testing.

Ms. Rachael Gibson, Chief of External Affairs, reviewed the attached Office of Government Relations Update and Summary of Election Results, identified as Handouts 9.1-A and 9.1-B herein.

Copies of the Handout were distributed to the Board and made available to the public.

10. ADMINISTRATION:

None.

11. DISTRICT COUNSEL:

None.

12. ADJOURN:

12.1 Board Member Reports/Announcements.

Director Varela reported attending the Board's Annual Visit to Washington DC, held virtually this year; Joint Venture Silicon Valley, Youth Commission, and San Luis Delta Mendota Water Authority (SLDMWA) meetings; and a meeting with Assembly Member Robert Rivas.

Director Keegan reported attending the aforementioned virtual Washington DC Annual Board Visit and Youth Commission meeting; virtual meetings with Sacramento lobbyists; Board Audit Committee (BAC), and Board Performance Planning Committee (BPPC) meetings; and various meetings with staff.

Director Santos reported attending the aforementioned virtual Washington DC Annual Board Visit and a Southeast U.S. Army Corps of Engineers meet and greet event.

Director LeZotte reported attending the aforementioned BAC and BPPC meetings; a meeting with the Board's auditor; a Recycled Water Committee (RWC) meeting; Ethics training; and various meetings with staff.

Chairperson Hsueh reported attending the aforementioned virtual Washington DC Annual Board Visit, Youth Commission, BPPC, and RWC meetings; and various meetings with staff.

Director Estremera reported attending the aforementioned virtual Washington DC Annual Board Visit and BPPC meetings; a Green Latinos National Environmental Organization meeting; a Valley Water Town Hall meeting and well owner conference; Delta Conveyance Authority preparatory and Board meetings; and various meetings with staff.

Director Kremen reported attending the aforementioned virtual Washington DC Annual Board Visit, and BAC and SLDMWA meetings; a San Francisquito Creek Joint Powers Authority meeting; and various meetings with staff.

12.2 Clerk Review and Clarification of Board Requests.

None.

12.3 Adjourn to Regular Meeting at 1:00 p.m., on December 8, 2020, to be called to order in compliance with the State Emergency Services Act, the Governor's Emergency Declaration related to COVID-19, and the Governor's Executive Order N-29-20.

Chairperson Hsueh adjourned the meeting at 9:00 p.m., in memory of Mr. Patrick King, husband of Ms. Michele King, Santa Clara Valley Water District Clerk, Board of Directors, and expressed its deepest condolences to Ms. King as she adjusts to her husband's loss.

The next regular meeting of the Santa Clara Valley Water District Board of Directors is scheduled to be held at 1:00 p.m., on December 8, 2020, and will be called to order in compliance with the State Emergency Services Act, the Governor's Emergency Declaration related to COVID-19, and the Governor's Executive Order N-29-20.

Michele L. King, CMC
Clerk, Board of Directors

Approved:

Date: 01/26/2021

BOARD OF DIRECTORS MEETING

MINUTES

CLOSED SESSION AND REGULAR MEETING
TUESDAY, DECEMBER 8, 2020
11:00 AM

(Paragraph numbers coincide with agenda item numbers)

1. CALL TO ORDER:

1.1. Roll Call.

Board members in attendance were Tony Estremera, Nai Hsueh, and Richard Santos. Board members participating by teleconference were Barbara Keegan, Gary Kremen, Linda J. LeZotte, and John L. Varela, constituting a quorum of the Board.

Staff in attendance was M. King, Clerk, Board of Directors. Staff members participating by teleconference were R. Callender, Chief Executive Officer, S. Yamamoto, District Counsel, B. Broome, M. Cook, G. De La Piedra, R. Gibson, C. Hakes, G. Hall, L. Orta, M. Richardson, D. Rocha, D. Taylor, S. Tippets, and T. Yoke.

2. TIME CERTAIN:

Chairperson Hsueh confirmed that the Board would adjourn to Closed Session for consideration of Items 2.1 through 2.4. Upon return to Open Session, the same Board members and staff were present.

11:00 AM

2.1. CLOSED SESSION (Continued from November 10, 2020)
CONFERENCE WITH LEGAL COUNSEL - INITIATION OF LITIGATION
Pursuant to Government Code Section 54956.9(d)(4) - Three Potential Cases

2.2. CLOSED SESSION
CONFERENCE WITH LABOR NEGOTIATORS
Pursuant to Government Code Section 54957.6(a)
Agency Designated Representatives: Rick Callender, Laura Harbert, Tina Yoke, Ingrid Bella
Employee Organizations: Employees Association, Engineers Society, Professional Managers Association

2.3. CLOSED SESSION
CONFERENCE WITH LEGAL COUNSEL
CONFERENCE WITH REAL PROPERTY NEGOTIATORS
Pursuant to Government Code Section 54956.8:
Setting Negotiation Parameters for Price and Terms of Payment for Acquiring Property Interest in APN 015-32-042 and APN 015-32-043
Negotiators: Rick Callender, Melanie Richardson, Rechelle Blank, Eli Serrano, Bill Magleby, Rachael Gibson, Don Rocha, Sunshine Julian
Other Negotiating Parties: City of San Jose

2.4. CLOSED SESSION
CONFERENCE WITH LEGAL COUNSEL
Pursuant to Government Code Section 54957(a)
THREAT TO PUBLIC SERVICES OR FACILITIES - Consultation with Alex Gordon, Assistant Officer

1:00 PM

2.5. District Counsel Report on Closed Session.

Mr. Brian Hopper, Senior Assistant District Counsel, reported that in regard to Items 2.1, 2.2, 2.3, and 2.4, the Board met in Closed Session with all members present and gave direction to staff.

2.6. Pledge of Allegiance/National Anthem.

Director Varela led all present in reciting the Pledge of Allegiance.

2.7. Orders of the Day.

Chairperson Hsueh confirmed that Item 3.5 would be removed from the Consent Calendar for individual consideration, and that Item 7.3 would be deferred until after consideration of Item 7.4.

2.8. Time Open for Public Comment on any Item not on the Agenda.

Mr. Pedro Najar, San Jose resident, described his experiences during the 2017 President's Day Weekend Flooding event and the impacts that resulted to his family, home, and health. He expressed frustration with the length of time it has taken to settle claims filed against Valley Water associated with the event.

Mr. Ted Smith, of undisclosed residency or affiliation, read into the record the following statement of Ms. Christie Mariano: *The flood of 2017 forced me out of an affordable apartment on South 20th Street and into months of very stressful and different temporary living arrangements all over the County. I am a diabetic who needs regular dialysis and a very strict diet. Because of my diabetes and other health challenges, these numerous relocations have made it really difficult to follow the medical care that I need for my survival. I only wish that finally finding a permanent, affordable living arrangement with caring friends meant an end to my flood-related stress, but, unfortunately it didn't. It is now almost four years since this nightmare happened and yet the Water District still has not*

compensated me for my losses and is only just beginning to take steps to prevent a recurrence. I firmly believe that if the Water District had done its job properly this all could have been avoided. I am a Native American woman and I'm resilient and I'm resourceful, but that does not make it okay for the Water District to expose me and my neighbors to devastating flood waters when the Water District knew the dangers and could have prevented the flooding. I have seen the video from a few months ago when Water District Board and staff were listening to other flood survivors and expressed their condolences and vowed that just compensation from the Water District was in the works. We were told that a resolution would be prompt and fair, but then, nothing has happened. Is the Water District hoping that if you drag this out long enough, we would give up ever being compensated? Well, we will not. We are resilient and determined and will stay the course until justice is realized.

3. CONSENT CALENDAR:

The Board noted that Item 3.3 had been removed from the agenda, and that Item 3.5 had been removed from the Consent Calendar for individual consideration, and considered Consent Calendar Items 3.1, 3.2, 3.4, and 3.6 through 3.8, under one motion.

Chairperson Hsueh requested that the minutes contained in Item 3.7, Attachment 1, Page 6, Item 4.2, Paragraph 3, be revised to read *The Board referred to the Water Storage* ***Exploratory*** ***~~Conservation and Demand Management~~*** *Committee discussion on the development of Water Storage facilities with the availability and reliability of imported water supply; and continued further discussion to the November 17, 2020 Special Board meeting.*

3.1. Adopt a Resolution Authorizing Conveyance of Real Property Rights to Hicks Land LLC, for a portion of APN No. 575-10-002, Real Estate File No. 9189-8.2 (Guadalupe Reservoir) (District 7).

Recommendation:
A. Adopt the resolution AUTHORIZING CONVEYANCE OF REAL PROPERTY RIGHTS TO HICKS LAND LLC; and
B. Authorize the Chief Executive Officer to execute the Quitclaim Deed and Santa Clara Valley Water District Real Property Purchase and Sale Agreement, Real Estate File No. 9189-8.2.

3.2. Deny Claim of Amit Sarin.

Recommendation: Deny the claim.

3.3. (ITEM REMOVED FROM AGENDA) Deny Claim of Hacienda Creek Senior Apartments.

3.4. Approve the Board of Directors' Quarterly Expense Report for the Quarter Ending September 30, 2020.

Recommendation:
A. Review the Board of Directors' Quarterly Expense Report for the Quarter Ending September 30, 2020; and
B. Approve the report, if the reimbursements comply with Board Policy.

3.6. Joint Use Agreement with the County of Santa Clara Exchanging Easement Rights for the Upper Berryessa Creek Flood Protection Project. (District 3).

Recommendation:
A. Adopt the RESOLUTION TO QUITCLAIM AND EXCHANGE REAL PROPERTY EASEMENT RIGHTS WITH THE COUNTY OF SANTA CLARA FOR UPPER BERRYESSA CREEK CROSSING MONTAGUE EXPRESSWAY; and
B. Approve and authorize the Chief Executive Officer (CEO) to execute a JOINT USE AGREEMENT quitclaiming certain easement rights in exchange for replacement easement rights within Upper Berryessa Creek and Montague Expressway.

3.7. Approval of Minutes.

Recommendation: Approve the minutes.

3.8. Accept the CEO Bulletin for the Weeks of November 20, Through December 3, 2020.

Recommendation: Accept the CEO Bulletin.

Motion: Approve Consent Calendar Items 3.1, 3.2, 3.4, and 3.6 through 3.8, under one motion, as follows: adopt Resolution No. 20-93, AUTHORIZING CONVEYANCE OF REAL PROPERTY RIGHTS TO HICKS LAND LLC, by roll call vote, and authorize the CEO to execute the Quitclaim Deed and Real Property Purchase and Sale Agreement, as contained in Item 3.1; deny the claim of Mr. Amit Sarin, as contained in Item 3.2; approve the Board of Directors' quarterly expense report for the quarter ending September 30, 2020, as contained in Item 3.4; adopt Resolution No. 20-94, RESOLUTION TO QUITCLAIM AND EXCHANGE REAL PROPERTY EASEMENT RIGHTS WITH THE COUNTY OF SANTA CLARA FOR UPPER BERRYESSA CREEK CROSSING MONTAGUE EXPRESSWAY, by roll call vote, and authorize the CEO to execute a Joint Use Agreement quitclaiming certain easement rights in exchange for replacement easement rights within Upper Berryessa Creek and Montague Expressway, as contained

in Item 3.6; approve the October 27, 2020 minutes as revised, as contained in Item 3.7; and accept the CEO Bulletin, as contained in Item 3.8.

Move to Approve:	Richard Santos
Second:	Tony Estremera
Yeas:	Tony Estremera, Nai Hsueh, Barbara Keegan, Gary Kremen, Linda J. LeZotte, Richard Santos, John L. Varela
Nays:	None
Abstains:	None
Recuses:	None
Absent:	None
Summary:	7 Yeas; 0 Nays; 0 Abstains; 0 Absent.

Chairperson Hsueh returned the agenda to Item 3.5.

3.5. Approve the Agreement with Arthur J. Gallagher & Co., for Insurance Broker Services - 2020, CAS File 5134, for a Not-To-Exceed Fee of $294,000.

Recommendation: Approve the Agreement with Arthur J. Gallagher & Co., for Insurance Broker Services - 2020, for a not-to-exceed fee of $294,000.

Mr. David Cahen, Risk Manager, reviewed the information on this item, per the attached Board Agenda Memorandum.

The Board expressed concern that a local, small or minority-, woman-, or veteran-owned business was not being used; expressed concern whether the Request for Proposal (RFP) process had been made too complicated for local, small, or minority-, woman-, or veteran-owned businesses to apply; and discussed various alternatives to extend the existing agreement, or shorten the length of the proposed agreement, to allow for a new RFP to be issued.

Motion: Amend Valley Water's existing agreement for Insurance Broker Services to extend the terms for 90 days, and direct staff to reissue the RFP.

Move to Approve:	Tony Estremera
Second:	Richard Santos

Director LeZotte offered the following substitute motion:

Motion: Amend Valley Water's existing agreement for Insurance Broker Services to extend the term for one year, and direct staff to reissue the RFP, increase RFP outreach, and bring back discussion to the Board.

Move to Approve: Linda J. LeZotte
Second: No Seconder

The motion failed for lack of a second.

Director Estremera withdrew his motion.

The Board continued the item to the December 15, 2020 Special Meeting, and directed staff to come back with discussion on the auditor recommendation to remove Risk Management from the Office of District Counsel and be placed in Contracts and Procurement under the Chief Executive Officer instead, and information on various Agreement extension alternatives and proposals for an RFP process to renew the services in a manner that addresses the Board's concerns expressed herein.

Chairperson Hsueh returned the agenda to Item 2.8.

2.8. Time Open for Public Comment on any Item not on the Agenda.

Ms. Mirna Alcantara, Hollister resident, described her experiences as a Rockwood neighborhood resident during the 2017 President's Day Weekend Flooding event, discussed the impacts the event had on her family and their finances, and urged the Board to expedite resolution of claims.

Chairperson Hsueh returned the agenda to Item 4.1.

REGULAR AGENDA:

4. BOARD OF DIRECTORS:

4.1. Board Committee Reports.

Standing Reports (Verbal Reports):
1. Delta Conveyance Design and Construction Authority (DCA) Update
2. Delta Conveyance Finance Authority (Finance Authority) Update

Board Committees (Summary or Meeting Agenda):
3. Board Audit Committee (BAC)
4. Board Policy and Planning Committee (BPPC)
5. Capital Improvement Program (CIP) Committee
6. Diversity and Inclusion (D&I) Ad Hoc Committee
7. Stream Planning and Operations Committee (SPOC) (Formerly FAHCE)
8. Homeless Encampment Ad Hoc Committee
9. Recycled Water Committee (RWC)
10. Water Conservation and Demand Management (WCDM) Committee
11. Water Storage Exploratory Committee (WSEC)

Board Advisory Committees (Summary or Meeting Agenda):
12. Agricultural Water Advisory Committee (AWAC)
13. Environmental and Water Resources Committee (EWRC)

14. Santa Clara Valley Water Commission (Water Commission)
15. Youth Commission

Board Joint Committees (Summary or Meeting Agenda):
16. Joint Recycled Water Advisory Committee (JRWAC) (Sunnyvale)
17. Joint Recycled Water Advisory Committee (JRWAC) (East PA/PA/MV)
18. Joint Recycled Water Policy Advisory Committee (JRWPAC) (SJ/SC/TPAC)
19. Joint Water Resources Committee (JWRC) (Gilroy/Morgan Hill)
20. San Felipe Division Reach One

External Committees/Agencies (Verbal Report):
21. ACWA and ACWA Joint Powers Insurance Authority
22. Joint Venture Silicon Valley Board of Directors
23. Landscape Committee
24. Local Agency Formation Commission (LAFCO)
25. Northern California Latino Water Coalition
26. Pajaro River Watershed Flood Protection Authority
27. Redevelopment Dissolution Countywide Oversight Board of Santa Clara County
28. Safe, Clean Water Independent Monitoring Committee (SCW IMC)
29. San Francisquito Creek JPA
30. Santa Clara County Water Retailers
31. Santa Clara Valley Habitat Conservation Plan JPA
32. San Luis and Delta-Mendota Water Authority Board
33. Santa Clara County Emergency Operations Area Council
34. Santa Clara County Recycling and Waste Reduction Commission
35. Santa Clara County Special Districts Association
36. South County Regional Wastewater Authority (SCRWA)
37. Zone 7, EBRPD, ACWD, SCVWD, LARPD and Tri-Valley Conservancy Liaison Committee

The Board noted the information without formal action.

4.2. Proposed Future Board Member Agenda Items.

Chairperson Hsueh noted that continued discussion of Item 3.5 would be brought back at the December 15, 2020 Special Meeting.

5. WATER UTILITY ENTERPRISE:

5.1. (ITEM REMOVED FROM AGENDA) Notice of Completion of Contract and Acceptance of Work for the Rinconada Water Treatment Plant Reliability Improvement Project, Balfour Beatty Infrastructure, Inc., Contractor, Project No. 93294057, Contract No. C0601 (Los Gatos) (District 7). (Continued from November 10, 2020)

The Board noted Item 5.1 had been removed from the agenda.

5.2. Adopt Plans and Specifications and Authorize Advertisement for Bids for the Penitencia Water Treatment Plant Rehabilitation of Flocculation and Sedimentation Basins Project, Project No. 93764004, Contract No. C0664 (San Jose), (District 3).

Recommendation:

A. Find that the Penitencia Water Treatment Plant Rehabilitation of Flocculation and Sedimentation Basins Project is substantially complex and requires a construction contract retention of 10 percent;

B. Adopt Plans and Specifications and Authorize Advertisement for Bids for Construction of the Penitencia Water Treatment Plant Rehabilitation of Flocculation and Sedimentation Basins Project per the Notice to Bidders; and

C. Authorize the Designated Engineer to issue addenda, as necessary, during the bidding process.

The Board considered Item 5.2 without a staff presentation.

Move to Adopt:	Tony Estremera
Second:	Richard Santos
Yeas:	Tony Estremera, Nai Hsueh, Barbara Keegan, Gary Kremen, Linda J. LeZotte, Richard Santos, John L. Varela
Nays:	None
Abstains:	None
Recuses:	None
Absent:	None
Summary:	7 Yeas; 0 Nays; 0 Abstains; 0 Absent.

6. WATERSHEDS:

None.

7. ASSISTANT CHIEF EXECUTIVE OFFICER:

7.1. Asset Management Program Update.

Recommendation: Receive an update on Valley Water's Asset Management Program.

Ms. Melanie Richardson, Assistance Chief Executive Officer, reviewed the information on this item per the attached Board Agenda Memorandum, and Ms. Erin Baker, Asset Management Manager, reviewed the corresponding presentation materials contained in Attachment 1.

The Board noted the information, without formal action.

7.2. Authorize the Chief Executive Officer to Negotiate and Execute an Agreement with COWI North America, Inc. for Construction Management Services for the Anderson Dam Tunnel Project, as part of the Anderson Dam Seismic Retrofit Project No. 91864005, (Morgan Hill) (District 1).

Recommendation: Authorize the Chief Executive Officer to negotiate and execute an Agreement with COWI North America, Inc., for Construction Management Services for the Anderson Dam Tunnel Project (ADTP) for an amount not-to-exceed $21 million.

Mr. Emmanuel Aryee, Assistant Officer, reviewed the information on this item, per the attached Board Agenda Memorandum, and per the information contained in Attachment 3.

The Board expressed concern about whether their policies were clear in providing guidance and setting limitations on appropriate projected agreement cost thresholds for agreements exceeding $225,000, where the agreement is brought to the Board for the Board to authorize the CEO to negotiate and execute without a final opportunity for Board approval once negotiations were complete.

Chairperson Hsueh set a January 5, 2021 special meeting at a time to be established by the Clerk, and continued Item 7.2 to the January 5, 2021 Special meeting.

Chairperson Hsueh moved the agenda to Item 7.4.

7.4. Authorize Chief Executive Officer to Negotiate and Execute Amendment No. 8 to Agreement A3676A Between Santa Clara Valley Water District and URS Corporation, for Engineering Design Services for the Anderson Dam Seismic Retrofit Project and the Anderson Dam Tunnel Project, Project No. 91864005, (Morgan Hill) (District 1).

Recommendation: Authorize the Chief Executive Officer to negotiate and execute Amendment No. 8 to Agreement A3676A with URS Corporation, for engineering design services for the Anderson Dam Seismic Retrofit Project (ADSRP) and the Anderson Dam Tunnel Project (ADTP), for an amount not-to-exceed $17 million.

The Board continued Item 7.4 to the January 5, 2021 Special Meeting.

Chairperson Hsueh returned the agenda to Item 7.3.

Director LeZotte momentarily discontinued her participation by teleconference and rejoined as noted below.

7.3. Budget Adjustment in the Amount of $21 million from the Capital Warranty Services Project No. 95074001 to the Anderson Dam Seismic Retrofit Project, Project No. 91864005 (District 1).

Recommendation: Approve a budget adjustment in the amount of $21 million from the Capital Warranty Services Project No. 95074001 to the Anderson Dam Seismic Retrofit Project, Project No. 91864005.

Mr. Aryee reviewed the information on this item, per the attached Board Agenda Memorandum.

Move to Approve:	Tony Estremera
Second:	Richard Santos
Yeas:	Tony Estremera, Nai Hsueh, Barbara Keegan, Gary Kremen, Richard Santos, John L. Varela
Nays:	None
Abstains:	None
Recuses:	None
Absent:	Linda J. LeZotte
Summary:	6 Yeas; 0 Nays; 0 Abstains; 1 Absent.

Director LeZotte rejoined the meeting by teleconference.

8. EXTERNAL AFFAIRS:

8.1. Receive Update on Office of Communications.

Recommendation:
A. Receive information on the Office of Communication's accomplishments and planned activities; and
B. Provide input on current and future challenges, goals, and accomplishments since the last presentation to the Board.

Ms. Linh Hoang, Communications Manager, reviewed the information on this item, per the attached Board Agenda Memorandum, and per the information contained in Attachment 1.

The Board noted the information, without formal action.

9. CHIEF EXECUTIVE OFFICER:

9.1. Implementation of Countywide Redistricting Process Required Following the 2020 Census.

Recommendation:

A. Consider the process, criteria and approach for countywide redistricting as a result of the 2020 decennial census;
B. Approve establishing a 7-Member Redistricting Advisory Committee and a process for appointment;
C. Adopt criteria to guide the redistricting process; and
D. Approve a schedule and approach for the Redistricting Advisory Committee.

Mr. Don Rocha, Acting Deputy Administrative Officer, reviewed the information on this item per the attached Board Agenda Memorandum, and per the information contained in Attachment 1. He clarified that on Attachment 1, Slide 8, Section 1, ***~~March 17, 2021~~*** should read ***the last week of January, 2021.***

Move to Approve:	Tony Estremera
Second:	Richard Santos
Yeas:	Tony Estremera, Nai Hsueh, Barbara Keegan, Gary Kremen, Linda J. LeZotte, Richard Santos, John L. Varela
Nays:	None
Abstains:	None
Recuses:	None
Absent:	None
Summary:	7 Yeas; 0 Nays; 0 Abstains; 0 Absent.

9.2. Overview of the Fiscal Year 2021-22 Budget Process.

Recommendation:

A. Receive an overview and provide feedback on the Fiscal Year 2021-22 Budget process;
B. Direct staff to continue $3 million contribution to unfunded pension liability instead of Other Post-Employment Benefits (OPEB) unfunded liability for one more year (Fiscal Year 2021-22);
C. Direct staff to halt any further work on implementing a Retailer Loan Program; and
D. Direct staff to communicate a message to the Agricultural Community encouraging the Agricultural Community to reach out to the Valley Water Revenue Collection team if experiencing financial difficulty due to the pandemic.

Mr. Darin Taylor, Chief Financial Officer, reviewed the information on this item, per the attached Board Agenda Memorandum, and facilitated additional discussion on Board Agenda Memorandum Recommendations C and D; and Mr. Enrique De Anda, Budget Manager, reviewed the attached presentation materials contained in Attachment 1.

Move to Approve:	Tony Estremera
Second:	Richard Santos
Yeas:	Tony Estremera, Nai Hsueh, Barbara Keegan, Gary Kremen, Linda J. LeZotte, Richard Santos, John L. Varela
Nays:	None
Abstains:	None
Recuses:	None
Absent:	None
Summary:	7 Yeas; 0 Nays; 0 Abstains; 0 Absent.

9.3. Board Confirmation of the Chief of External Affairs.

Recommendation: Confirm the appointment of Rachael Gibson as the Chief of External Affairs for the Santa Clara Valley Water District.

Mr. Rick Callender, Chief Executive Officer, reviewed the information on this item, per the attached Board Agenda Memorandum.

Mr. Christophe LaBelle, Silicon Valley Leadership Group, expressed support for the appointment of Ms. Rachael Gibson as Chief of External Affairs.

Director Kremen momentarily discontinued his participation by teleconference and rejoined as noted below.

Move to Approve:	John L. Varela
Second:	Richard Santos
Yeas:	Tony Estremera, Nai Hsueh, Barbara Keegan, Linda J. LeZotte, Richard Santos, John L. Varela
Nays:	None
Abstains:	None
Recuses:	None
Absent:	Gary Kremen
Summary:	6 Yeas; 0 Nays; 0 Abstains; 1 Absent.

The Board individually and collectively expressed congratulations to Ms. Gibson.

Director Kremen rejoined the meeting by teleconference.

9.4. CEO and Chiefs' Report.

Mr. Christopher Hakes, Deputy Operating Officer, reported on the recent promotion of Mr. Emmanuel Aryee, Assistant Officer.

Ms. Sue Tippets, Interim Chief Operating Officer, discussed Anderson Dam Federal Energy Regulatory Commission Order Compliance efforts.

Ms. Tina Yoke, Chief Operating Officer, reported on a recent call-down drill exercise performed by Valley Water with other local agencies, which ensured communications between agencies as would be needed in the event of a dam emergency. She discussed the County of Santa Clara Public Health Department's most recent order regarding COVID-19; and advised the Board of the upcoming retirement of Ms. Roslyn Fuller, Deputy Administrative Officer.

Ms. Gibson reviewed the information on the attached Office of Communications and Office of Civic Engagement updates, identified respectively as Handouts 9.4-A and 9.4-B, herein. Copies of the handouts were distributed to the Board and made available to the public.

10. ADMINISTRATION:

None.

11. DISTRICT COUNSEL:

None.

12. ADJOURN:

12.1. Board Member Reports/Announcements.

Director Varela reported attending the Association of California Water Agencies (ACWA) Fall Conference, and ACWA Finance and Agriculture Committee meetings; a Sustainable Silicon Valley (SSV) WaterPalooza event; and various Board and staff meetings.

Director Keegan reported attending a Board Audit Committee (BAC) preparation meeting, a Delta Conveyance Authority (DCA) Chair's briefing, a Santa Clara County (SCC) COVID-19 Elected Officials meeting, a Project Labor Agreement Group meeting, and a Native American Heritage Celebration. She also reported having various meetings with the District Counsel's recruiter and with staff; and having taken the Oath of Office for her 2021-2024 term.

Director Santos reported attending the aforementioned SCC COVID-19 Elected Officials meeting; Landscape Advisory Committee (LAC) and Water Conservation and Demand Management (WCDM) meetings; and various meetings with staff.

Director LeZotte reported attending the aforementioned ACWA Fall Conference, SCC COVID-19 Elected Officials, and WCDM meetings; Local Agency Formation Commission (LAFCO) of Santa Clara County and California Special Districts Association (CSDA) meetings; and various Board and District Counsel recruitment meetings.

Chairperson Hsueh reported attending the aforementioned ACWA Fall Conference, and LAC and PLA meetings; a Leadership Sunnyvale meeting; a meeting with the Board's auditor; Budget Working Group and Independent Monitoring Committee meetings; and various meetings with staff. She also reported having taken the Oath of Office for her 2021-2024 term.

Director Estremera reported attending the aforementioned CSDA, PLA, and Budget Working Group meetings; and a meeting with elected officials and officers from the Contra Costa County Water and Sanitation Districts.

Director Kremen reported attending the aforementioned SSV WaterPalooza event; a San Francisquito Creek Joint Powers Authority meeting; a meeting with the District Counsel's recruiter; Silicon Valley Flood Risk event; and various meetings with staff.

12.2. Clerk Review and Clarification of Board Requests.

None.

12.3. Adjourn to Regular Meeting at 1:00 p.m., on January 12, 2021, to be called to order in compliance with the State Emergency Services Act, the Governor's Emergency Declaration related to COVID-19, and the Governor's Executive Order N-29-20.

Chairperson Hsueh adjourned the meeting at 3:50 p.m., to the Special Meeting at 10:00 a.m., on December 15, 2020, to be called to order in compliance with the State Emergency Services Act, the Governor's Emergency Declaration related to COVID-19, and the Governor's Executive Order N-29-20.

Michele L. King, CMC
Clerk/Board of Directors

Approved:

Date: 01/26/2021

BOARD OF DIRECTORS MEETING

MINUTES

CLOSED SESSION AND REGULAR MEETING
TUESDAY, DECEMBER 15, 2020
11:00 AM

(Paragraph numbers coincide with agenda item numbers)

1. CALL TO ORDER:

A Closed Session and Special Meeting of the Santa Clara Valley Water District (Valley Water) Board of Directors was called to order in the Valley Water Headquarters Building Boardroom at 5700 Almaden Expressway, San Jose, California, at 10:00 a.m.

1.1. Roll Call.

Board members in attendance were Nai Hsueh, and Richard Santos. Board members participating by teleconference were Barbara Keegan, Linda J. LeZotte, and John L. Varela, constituting a quorum of the Board.

Directors Estremera and Kremen joined the meeting by teleconference as noted below.

Staff in attendance was M. King, Clerk, Board of Directors. Staff participating by teleconference were R. Callender, Chief Executive Officer, S. Yamamoto, District Counsel, J. Aranda, A. Baker, R. Chan, R. Fuller, R. Gibson, H. McMahon, L. Orta, M. Richardson, D. Rocha, D. Taylor, S. Tippets, and T. Yoke.

1.2. Pledge of Allegiance/National Anthem.

Director Santos led all present in reciting the Pledge of Allegiance.

1.3. Time Open for Public Comment on any Item not on the Agenda.

Chairperson Hsueh declared time open for public comment on any item not on the agenda. There was no one present who wished to speak.

2. TIME CERTAIN:

10:00 AM

Chairperson Hsueh confirmed that the Board would adjourn to Closed Session for consideration of Item 2.1.

During Closed Session, Directors Estremera and Kremen joined the meeting by teleconference.

Upon return to Open Session, the same Board members, including Directors Estremera and Kremen, and staff were present.

2.1. CLOSED SESSION
CONFERENCE WITH LEGAL COUNSEL – EXISTING LITIGATION
Pursuant to Government Code Section 54956.9(d)(1)
SCVWD v. San Francisco Bay Regional Water Quality Control Board
First Appellate District, Court of Appeal of the State of California, Case No. A157127

11:00 AM

2.2. District Counsel Report on Closed Session.

Ms. Rita Chan, Assistant District Counsel, reported that in regard to Items 2.1, the Board met in Closed Session with all members present, including Directors Estremera and Kremen, and gave direction to staff.

Mr. David Cahen, Risk Manager, reviewed the information on Items 2.3 and 2.4, per the attached Board Agenda Memos.

2.3. Consider the Possible Effects of Extending the Agreement with Arthur J. Gallagher & Co. for Insurance Broker Services – 2020, CAS File No. 5134, for 90 Days or a Year; and Authorize the Chief Executive Officer to Extend the Agreement for One Year, for a Not-to-Exceed Fee of $57,500, with a Provision to Terminate Earlier Should a New Broker be Selected Before that Time.

Recommendation:
A. Consider the Possible Effects of Extending the Agreement with Arthur J. Gallagher & Co. for Insurance Broker Services – 2020, CAS File No. 5134, for 90 Days or a Year; and
B. Authorize the Chief Executive Officer to Extend the Agreement for One Year, for a Not-to-Exceed Fee of $57,500, with a Provision to Terminate Earlier Should a New Broker be Selected Before that Time.

Director Keegan stressed the importance of seeking opportunities to promote equitable contracting in Valley Water's procurement processes, and suggested that Requests for Proposals for specialized services be drafted to require portions of the services to be provided in partnership with small, local, and minority-, woman-, or veteran-owned businesses; and Director Kremen suggested that Arthur J. Gallagher & Co. provide a presentation to the Board on its small, local, and minority-, woman-, or veteran-owned business inclusion program.

Move to Authorize:	Gary Kremen
Second:	Tony Estremera
Yeas:	Tony Estremera, Nai Hsueh, Barbara Keegan, Gary Kremen, Linda J. LeZotte, Richard Santos, John L. Varela
Nays:	None
Abstains:	None
Recuses:	None
Absent:	None
Summary:	7 Yeas; 0 Nays; 0 Abstains; 0 Absent.

2.4. Receive Information on the Risk Management Unit Mission Statement, Functions, and Activities, and Schedule Further Discussion on the Risk Management Unit Reporting Structure Subsequent to Receipt of Recommendations Resulting from the December 16, 2020 Board Audit Committee Meeting, Regarding the District Counsel Audit Final Report.

Recommendation: Receive Information on the Risk Management Unit Mission Statement, Functions, and Activities, and Schedule Further Discussion on the Risk Management Unit Reporting Structure Subsequent to Receipt of Recommendations Resulting from the December 16, 2020 Board Audit Committee Meeting, Regarding the District Counsel Audit Final Report.

Director Keegan confirmed that the Board Audit Committee would consider the District Counsel Final Audit Report during its December 16, 2020 meeting, and would hold discussion to consider making a recommendation to the Board on adding a Risk Management Audit to the Board Audit Work Plan during its January 2021 meeting.

Motion: Approve Scheduling Further Discussion on the Risk Management Unit Reporting Structure Subsequent to Receipt of Recommendations Resulting from the December 16, 2020 Board Audit Committee Meeting, Regarding the District Counsel Audit Final Report, and after the January 2021 Board Audit Committee Meeting, Regarding Inclusion of a Risk Management Audit on the Board Audit Work Plan.

Move to Approve:	Barbara Keegan
Second:	Nai Hsueh
Yeas:	Tony Estremera, Nai Hsueh, Barbara Keegan, Gary Kremen, Linda J. LeZotte, Richard Santos, John L. Varela
Nays:	None
Abstains:	None
Recuses:	None
Absent:	None
Summary:	7 Yeas; 0 Nays; 0 Abstains; 0 Absent.

3. ADJOURN:

3.1. Clerk Review and Clarification of Board Requests.

Ms. Michele King, Clerk, Board of Directors, confirmed that there were no new Board Member Requests.

3.2. Adjourn to Special Meeting at 10:00 a.m., on January 5, 2020, to be called to order in compliance with the State Emergency Services Act, the Governor's Emergency Declaration related to COVID-19, and the Governor's Executive Order N-29-20.

Chairperson Hsueh noted a typographical error in the next meeting date provided in the published agenda's adjourn statement, and adjourned the meeting at 11:40 a.m. to the Special Meeting at 10:00 a.m. on January 5, 2021, to be called to order in compliance with the State Emergency Services Act, the Governor's Emergency Declaration related to COVID-19, and the Governor's Executive Order N-29-20.

Michele L. King, CMC
Clerk, Board of Directors

Approved:

Date: 01/26/2021

BOARD OF DIRECTORS MEETING

MINUTES

CLOSED SESSION AND SPECIAL MEETING
TUESDAY, JANUARY 5, 2021
10:00 AM

(Paragraph numbers coincide with agenda item numbers)

1. CALL TO ORDER:

A Closed Session and Special Meeting of the Santa Clara Valley Water District (Valley Water) Board of Directors was called to order in the Valley Water Headquarters Building Boardroom at 5700 Almaden Expressway, San Jose, California, at 10:00 a.m.

1.1 Roll Call.

Board members in attendance were Nai Hsueh and Richard Santos. Board members participating by teleconference were Barbara Keegan, Gary Kremen, Linda J. LeZotte, and John L. Varela, constituting a quorum of the Board.

Director Tony Estremera joined the meeting by teleconference, as noted below.

Staff in attendance was M. King, Clerk, Board of Directors. Staff participating by teleconference were R. Callender, Chief Executive Officer, L. Orta, Acting District Counsel, A. Baker, M. Cook, R. Gibson, V. Gin, A. Gschwind, C. Hakes, B. Hopper, H. McMahon, M. Richardson, D. Rocha, D. Taylor, S. Tippets, K. Wong, and T. Yoke.

2. TIME CERTAIN:

10:00 AM

Chairperson Hsueh confirmed that the Board would adjourn to Closed Session for consideration of Item 2.1.

During Closed Session, Director Estremera joined the meeting by teleconference.

Upon return to Open Session, the same Board members, including Director Estremera, and staff were present.

2.1 CLOSED SESSION
PUBLIC EMPLOYEE APPOINTMENT
Pursuant to Government Code Section 54957(b)(1)
Title: District Counsel

11:00 AM

2.2 District Counsel Report on Closed Session.

Chairperson Hsueh reported that in regard to Items 2.1, the Board met in Closed Session with all members present, including Director Estremera, and gave direction to staff.

2.3 Pledge of Allegiance/National Anthem.

Ms. Michele King, Clerk, Board of Directors, led all present in reciting the Pledge of Allegiance.

2.4 Time Open for Public Comment on any Item not on the Agenda.

Chairperson Hsueh declared time open for public comment on any item not on the agenda.

Mr. John Zoglin, El Camino Healthcare District Board Member, requested support for his position as Special District Alternate Representative to the Local Agency Formation Commission (LAFCO).

Chairperson Hsueh reported that she had received a draft report from Ms. Amy Oppenheimer, Independent Investigator, in regard to the investigation into the complaint filed by Rev. Jethro Moore, San Jose Silicon Valley National Association for the Advancement of Colored People (NAACP) President.

Chairperson Hsueh confirmed that consistent with Board Governance Policies, and her role as Board Chair, she would review the draft report and come back with recommendations as to the report's completeness and consistency with the Independent Investigator's scope of work.

Mr. Emmanuel Aryee, Assistant Officer, reviewed the information on Items 2.5 and 2.6, per the attached Board Agenda Memos.

2.5 Approve Agreement with COWI North America, Inc., for Construction Management Services for the Anderson Dam Tunnel Project, Project No. 91864005, for a Not-to-Exceed Fee of $20,465,000 (Morgan Hill) (District 1) (Continued from December 8, 2020).

Recommendation:	Approve the Agreement with COWI North America, Inc., for Construction Management Services for the Anderson Dam Tunnel Project for a not-to-exceed fee of $20,465,000.
Move to Approve:	Linda J. LeZotte
Second:	Barbara Keegan
Yeas:	Tony Estremera, Nai Hsueh, Barbara Keegan, Gary Kremen, Linda J. LeZotte, Richard Santos, John L. Varela
Nays:	None
Abstains:	None
Recuses:	None
Absent:	None
Summary:	7 Yeas; 0 Nays; 0 Abstains; 0 Absent.

2.6 Approve Amendment No. 8 to Agreement No. A3676A, with URS Corporation, for Design Services for the Anderson Dam Seismic Retrofit Project, Project No. 91864005, for a Not-to-Exceed Fee of $16,715,863, Increasing the Total Not-to-Exceed Fee to $48,069,366, and extending the Agreement Term (Morgan Hill) (District 1) (Continued from December 8, 2020).

Recommendation:	Approve Amendment No. 8 to Agreement No. A3676A with URS Corporation for Design Services for the Anderson Dam Seismic Retrofit Project, Project No. 91864005, for a not-to-exceed fee of $16,715,863, increasing the total not-to-exceed fee to $48,069,366, and extending the Agreement term.
Move to Approve:	Richard Santos
Second:	Nai Hsueh
Yeas:	Tony Estremera, Nai Hsueh, Barbara Keegan, Gary Kremen, Linda J. LeZotte, Richard Santos, John L. Varela
Nays:	None
Abstains:	None
Recuses:	None
Absent:	None
Summary:	7 Yeas; 0 Nays; 0 Abstains; 0 Absent.

3. ADJOURN:

3.1 Clerk Review and Clarification of Board Requests.

Ms. King confirmed that there were no new Board Member Requests.

3.2 Adjourn to Regular Meeting at 1:00 p.m., on January 12, 2021, to be called to order in compliance with the State Emergency Services Act, the Governor's Emergency Declaration related to COVID-19, and the Governor's Executive Order N-29-20.

Chairperson Hsueh adjourned the meeting at 11:40 a.m., to the next regularly scheduled meeting at 1:00 p.m., on January 12, 2021, to be called to order in compliance with the State Emergency Services Act, the Governor's Emergency Declaration related to COVID-19, and the Governor's Executive Order N-29-20.

Michele L. King, CMC
Clerk, Board of Directors

Approved:

Date: 01/26/2021

THIS PAGE INTENTIONALLY LEFT BLANK

Santa Clara Valley Water District

File No.: 21-0051

Agenda Date: 1/26/2021
Item No.: *3.5.

BOARD AGENDA MEMORANDUM

SUBJECT:
Accept the CEO Bulletin for the Weeks of January 8-21, 2021.

RECOMMENDATION:
Accept the CEO Bulletin.

SUMMARY:
The CEO Bulletin is a weekly communication for the CEO, to the Board of Directors, assuring compliance with Executive Limitations Policy EL-7: The BAOs inform and support the Board in its work. Further, a BAO shall: inform the Board of relevant trends, anticipated adverse media coverage, or material external and internal changes, particularly changes in the assumptions upon which any Board policy has previously been established; and report in a timely manner an actual or anticipated noncompliance with any policy of the Board.

CEO Bulletins are produced and distributed to the Board weekly as informational items, and then placed on the bimonthly, regular Board meeting agendas to allow opportunity for Board discussion on any of the matters contained therein.

FINANCIAL IMPACT:
There is no financial impact associated with this item.

CEQA:
The recommended action does not constitute a project under CEQA because it does not have a potential for resulting in direct or reasonably foreseeable indirect physical change in the environment.

ATTACHMENTS:
Attachment 1: 012121 CEO Bulletin

UNCLASSIFIED MANAGER:
Rick Callender, 408-630-2017

THIS PAGE INTENTIONALLY LEFT BLANK

CEO BULLETIN

To: Board of Directors
From: Rick L. Callender, CEO

Weeks of January 8 – January 21, 2021

Board Executive Limitation Policy EL-7:
The Board Appointed Officers shall inform and support the Board in its work. Further, a BAO shall 1) inform the Board of relevant trends, anticipated adverse media coverage, or material external and internal changes, particularly changes in the assumptions upon which any Board policy has previously been established and 2) report in a timely manner an actual or anticipated noncompliance with any policy of the Board.

Item	IN THIS ISSUE
1	2021 ACEC California Engineering Excellence Merit Award for the Permanente Creek Flood Protection Project – McKelvey Park Detention Basin Project
2	Cost Share Agreement with the U.S. Army Corps of Engineers for the Upper Guadalupe River Flood Risk Management Project Executed in December 2020
3	Penitencia Water Treatment Plant Underground Storage Tank Passes Regulatory Inspection
4	Safe, Clean Water FY18 D3 Mini-Grant Closeout: Veggielution's Eastside Explorers Watershed Curriculum Project
5	Santa Clara County Leadership Academy
6	Santa Teresa Water Treatment Plant Shutdown
7	Talent Development Trainings at Valley Water
8	U.S. Environmental Protection Agency Releases Revised Lead and Copper Rule
9	Valley Water Recognizes Volunteers
10	Kremen Provide Director Kremen with the draft FY20 CAFR for review. I-21-0001

1. 2021 ACEC California Engineering Excellence Merit Award for the Permanente Creek Flood Protection Project – McKelvey Park Detention Basin Project

Permanente Creek Flood Protection Project – McKelvey Park Detention Basin Project has been awarded the 2021 American Council of Engineering Companies of California (ACEC) Engineering Excellence Merit Award.

The ACEC recognized the McKelvey Park Flood Detention Basin project as a public works project that demonstrates excellence in its planning, design and construction, and coordinated effort between various stakeholders to complete the project. Those named in the award are Valley Water, Kiewit Infrastructure West, and Mott MacDonald. The 2021 ACEC California Engineering Excellence Awards celebration will be held on February 4, 2021 at 4:30pm as a virtual event.

ACEC California's annual Engineering Excellence Awards competition recognizes outstanding achievements in engineering and land surveying projects completed by California firms. Entries are accepted into one of 12 project categories: studies, research and consulting engineering services; building/technology systems; structural systems; surveying and mapping technology; environmental; waste and storm water; water resources; transportation; special projects; small projects; energy; and industrial and manufacturing processes and facilities.

The American Council of Engineering Companies of California (ACEC) is a 50 plus year-old, nonprofit association of private consulting engineering and land surveying firms. As a statewide organization, they are dedicated to enhancing the consulting engineering and land surveying professions, protecting the general public and promoting use of the private sector in the growth and development of our state whose members provide services for all phases of planning, designing and constructing projects. Member services include civil, structural, geotechnical, electrical and mechanical engineering and land surveying for all types of public works, residential, commercial and industrial projects. The organization promotes use of the private sector in the growth and improvement of California.

For further information, please contact Rechelle Blank at (408) 630-2615.

---

2. Cost Share Agreement with the U.S. Army Corps of Engineers for the Upper Guadalupe River Flood Risk Management Project Executed in December 2020

On December 31, 2020, the District Commander of the U.S. Army Corps of Engineers San Francisco District executed a cost sharing agreement between the Department of the Army and Valley Water for the Upper Guadalupe River Flood Risk Management Project. The agreement specifies cost sharing requirements by the parties to undertake a General Re-evaluation Study to identify an implementable solution for flood risk management along the Upper Guadalupe River. This project begins at Interstate Highway 280, at the edge of downtown San Jose, and extends south by approximately 5.5 miles, to Blossom Hill Boulevard. The total cost of the study will be $3 million and it will take 3 years. Valley Water's cost share is $1.5 million.

For further information, please contact Rechelle Blank at (408) 630-2615.

---

3. Penitencia Water Treatment Plant Underground Storage Tank Passes Regulatory Inspection

On an annual basis, Santa Clara County's (County) Hazardous Material Compliance Division is required to conduct an inspection of every underground storage tank (UST) system within the county. In late December 2020, the County inspector completed their annual inspection of the Penitencia Water Treatment Plant (PWTP) UST. The PWTP maintains a 4,000-gallon UST as the primary fuel (diesel) source for the facility's emergency generator system.

A County inspector arrived on-site to witness the functional testing of the UST's leak detection system. The PWTP UST has two leak sensors; one monitors for leaks between the primary and secondary tanks, the other monitors the sump where fuel filling occurs and the fuel piping terminates. Also, on an annual basis, it is verified that both the fuel supply and fuel return piping are capable of detecting a 0.1 gallon per hour leak. The leak sensors and pipe monitoring system are connected to a central monitoring panel which Valley Water plant operators check on a daily basis. Additionally this year, Valley Water was required to conduct its tri-annual overfill protection verification. This overfill verification test ensures that the mechanical device, internal to the UST, restricts the fuel level within the tank to no more than 95% of the UST capacity.

All leak detection and overfill protection devices on the PWTP UST system passed all required tests and inspection criteria.

For further information, please contact Tina Yoke at (408) 630-2385.

---

4. Safe, Clean Water FY18 D3 Mini-Grant Closeout: Veggielution's Eastside Explorers Watershed Curriculum Project

In FY 2018, Valley Water awarded Veggielution a $5,000 Safe, Clean Water Program D3 Mini-Grant for their Eastside Explorers Watershed Curriculum Project (Project). Veggielution completed the Project in November 2019 and grantee staff submitted the final invoice items in late 2020, allowing for grant closeout.

Veggielution developed and implemented a watershed-specific curriculum as part of their Eastside Explorers field trip program for local middle schools. The Eastside Explorers Watershed Curriculum encouraged students to consider the importance of a healthy and biologically diverse watershed to its natural environment. The curriculum incorporated the interconnection between urban and natural landscapes and the challenges of sustaining watershed viability.

The Eastside Explorers Watershed Curriculum engaged 380 middle school students, 282 of which were from East San Jose. Activities were centered around collaborative group tasks focused on urban agricultures, nutrition, human impacts, environmental justice, food justice and ecological interconnections. The curriculum educated students using hands on activities twice weekly throughout the Spring of 2019. Veggielution also hosted weekly field trips throughout the months of July and August 2019, alternating between San Jose Children's Discovery Museum and Youth Community Services in Palo Alto.

Key Outcomes:

- Developed a watershed education curriculum and outreached to schools in the community. Students were encouraged to return with their families to participate in Veggielution programs.
- After participating in the curriculum, students exhibited increased interest in farm activities and an appreciation of the benefits provided by a healthy watershed to the environment and surrounding community.
- Post-visit survey data showed that, before the field trips, over two-thirds of the visiting students were unaware of the importance of a watershed or how it affected our community. Upon completion of the field trip, 92% of students were able to effectively describe a watershed in their own words and 59% were able to describe a watershed more in-depth with a combination of terms such as drainage, land area, multiple water sources, and environment.

For further information, please contact Marta Lugo at (408) 630-2237.

---

5. Santa Clara County Leadership Academy

The Santa Clara County Leadership Academy will launch virtually from April – October 2021 with internal marketing and the application process to begin in January 2021. Valley Water plans to sponsor three staff to attend the eight-month program.

The Santa Clara County Leadership Academy is designed to help participants enhance their leadership skills. The program, comprised of 17 local governments, offers participants the opportunity to network with city managers, local government leaders, and peers throughout the county. The curriculum consists of in-class presentations by city managers and other local government leaders, critiques of case studies, a team project, and one-on-one coaching.

For further information, please contact Ingrid Bella at (408) 630-3171.

---

6. Santa Teresa Water Treatment Plant Shutdown

The Santa Teresa Water Treatment Plant (STWTP) is scheduled to be shut down for four (4) days, from Monday, February 1 through Thursday, February 4, 2021, to perform follow-up work on critical systems identified as needing repair during last November's biennial electrical systems and equipment testing. Completing these repair activities is essential to ensuring the plant's critical systems are reliable and remain in good working order. Barring any unforeseen circumstances, plant start-up is scheduled for Friday, February 5, 2021.

During this shutdown, only one of the East Pipeline (EPL) turnouts, San Jose Water Company's Graystone turnout, is expected to be impacted. All other EPL turnouts normally supplied from STWTP will be supplied from the Penitencia Water Treatment Plant.

The above-stated shutdown schedule has also been communicated to all EPL retailers, and the retailers impacted by this shutdown will use their groundwater and/or alternate supplies to meet demand.

For further information, please contact Bhavani Yerrapotu at (408) 630-2735.

---

7. Talent Development Trainings at Valley Water

Valley Water's Talent Development continuously offers a variety of training to support employees.

A listing of recent trainings provided include:

- 28 employees attended the two-day "Business Writing Basics" course on November 3rd, and 5th, 2020.
- 25 employees attended the "Increasing Your Emotional Intelligence" class on November 12, 2020.

These classes are part of the Analyst Certificate Program designed to help employees gain an understanding of the roles, responsibilities, and expectations of an Analyst. This is the second fiscal year of the Analyst Certificate Program. To date, 15 employees have completed the eight (8) classes required to obtain the certificate. Another 28 have less than three (3) classes left in order to graduate from the program.

Computer skill training continues to be provided virtually. Recently, 9 employees attended the Microsoft Word Tips and Timesavers class that took place on November 4, 2020 and 27 attended the Microsoft Forms class on December 9, 2020.

Talent Development provided a Virtual Supervisor/Manager 6-Day Academy on November 18, 2020, which was designed for public sector employees seeking to develop their leadership skills. 18 Valley Water employees completed the training. Attendees participated in small group breakout room discussions about real-world case studies and learned to apply fundamental concepts of supervision. The learning outcomes for this academy included: engaging employees to create a positive & productive workforce, communicating effectively as a leader, conducting difficult workplace conversations, creating a culture of accountability, leading proactively, managing performance. coaching for success, and more.

A Virtual Speed Mentoring Event held on December 17, 2020 was attended by 34 employees. The resounding consensus is that speed mentoring, and mentoring in general, works out well in the virtual format. Many of those who attended were new to Valley Water and hired during the shelter-in-place. This was a great way to engage with these employees who haven't had the typical in-person interaction that is usually part of the onboarding process.

For further information, please contact Ingrid Bella at (408) 630-3171.

---

8. U.S. Environmental Protection Agency Releases Revised Lead and Copper Rule

In 1991, the U.S. Environmental Protection Agency (EPA) published the Lead and Copper Rule (LCR). The LCR established a series of requirements and schedules for public water systems designed to reduce the level of lead and copper in drinking water. The LCR included requirements for water systems to monitor lead and copper levels in customers' taps, conduct water quality monitoring, conduct studies to evaluate corrosion control treatment and reporting, and conduct recordkeeping.

For many years, EPA has been working on revisions to the LCR, and the final Revised LCR was released by EPA in late December 2020. The Revised LCR establishes 3-year deadlines for water systems to meet certain requirements, such as modifications and tightening of the requirements for when a water system would need to conduct a study to evaluate corrosion control treatment.
The Revised LCR requires public water systems to:

- develop an inventory of lead service lines and, if applicable, replace lead service lines;
- conduct testing for lead at schools and licensed day care centers;
- implement a "find and fix" approach for individual homes with elevated levels of lead; and
- increase public outreach.

Many of the new requirements in the Revised LCR are already in place in California, including the requirement to prepare an inventory of lead service lines, develop a plan to remove lead service lines, and test for lead at schools and licensed day care centers. These requirements mostly impact water retailers. As a water wholesaler, Valley Water is anticipated to have minimal direct impacts from the Revised LCR.

Valley Water already provides corrosion control treatment at all three of its treatment plants. Valley Water continues to review and evaluate the new Revised LCR, collaborate with water organizations and other water agencies, and will work with our retail customers on how best to support their efforts to comply with the new provisions.

For further information, please contact Ms. Bhavani Yerrapotu at (408) 630-2735.

9. Valley Water Recognizes Volunteers

On January 6, 2021, Valley Water held its annual volunteer recognition event. During the event, the Valley Water Board of Directors recognized seven volunteers, one from each district, for their outstanding commitment and leadership in creek cleanup events or for demonstrating their passion for stewardship and community engagement through their role as a water ambassador. This year, due to the COVID-19 pandemic, the event took place via Zoom and was well attended by volunteers.

Creek stewardship volunteers were recognized for removing trash and recyclables from our creeks and streams, including supporting Valley Water's Coastal Cleanup days in September 2020 and for their partnership in the Adopt-A-Creek Program. They are truly committed to keeping our local waterways free of trash.

Water Ambassador volunteers, who go through intensive training in local water issues to become water champions in their own communities, were recognized for their leadership and for inspiring others to give back through volunteerism.

Recipients for this year's Volunteer Recognition Event included:

- Jeffrey Prickett from Stay Golden California - District 1, Director John L. Varela
- Justin Imamura from Trash Punx - District 2, Director Barbara F. Keegan
- Shari Carlet - District 3, Director Richard P. Santos
- Roy Hays - District 4, Director Linda J. LeZotte
- David Ma and Boy Scout Troop 400/2400 - District 5, Chair Nai Hsueh
- Rebecca Gallardo - District 6, Vice Chair Tony Estremera
- Martin Kim and BAF/131111 from Gunn High School - District 7, Director Gary Kremen

In 2020, a total of 1,307 volunteers generously gave over 4,000 hours of their time. The overall value of volunteer time given in 2020 for creek cleanups and other activities amounts to $126,000. Valley Water looks forward to working with our dedicated volunteers in the coming year.

For further information, please contact Marta Lugo at (408) 630-2237.

10. <u>Kremen</u>
Provide Director Kremen with the draft FY20 CAFR for review.
I-21-0001

On January 6, 2021, Valley Water provided Director Kremen with a revised draft copy of the Comprehensive Annual Financial Report (CAFR). A copy of the file can be obtained by contacting the Clerk of the Board.

For further information, please contact Darin Taylor at (408) 630-3068.

Santa Clara Valley Water District

File No.: 21-0117

Agenda Date: 1/26/2021
Item No.: *4.1.

BOARD AGENDA MEMORANDUM

SUBJECT:
Report of Former Board of Directors Chairperson Nai Hsueh, Upon Review of Investigation of May 27, 2020 Complaint Filed by Rev. Jethroe Moore, Against Directors Keegan and LeZotte.

RECOMMENDATION:
Review and Consider Findings in the Executive Summary of the investigative report.

SUMMARY:
On May 27, 2020, Rev. Jethroe Moore submitted a complaint to Valley Water alleging that Directors Keegan and LeZotte engaged in discriminatory and retaliatory conduct with respect to CEO Enrique L. Callender during the process for his selection to that position. Since Rev. Moore is a non-board member, the complaint was handled in accordance with the provisions of Board Governance Process 6.15 through 6.19, which is followed when a non-Board member files a written complaint stating his/her reasonable belief that a member of the Board has acted or failed to act in the best interests of the District resulting in misconduct. For reference, Rev. Moore's May 27, 2020 complaint is attached as Attachment 1[1].

District Counsel, with input from Board Ethics and Conduct Ad Hoc Committee, retained the services of Amy Oppenheimer, Attorney at Law, to serve as the impartial and independent investigator. Ms. Oppenheimer served as the principal investigator and was assisted by Julie M. Kennedy.

During the course of the investigation, Rev. Moore supplemented his complaint with a letter to the investigator dated August 10, 2020[1]. Based upon the allegations in the two letters and the investigators' interviews with Rev. Moore and CEO Callender, the investigator addressed four discrete issues:

1. Did Keegan and LeZotte release confidential information from Mr. Callender's personnel or EEO files to the media and the public?
2. Did Keegan and LeZotte spread information about Mr. Callender being a sexual harasser or a convicted felon as part of their "lobbying" against his appointment to the CEO position?
3. Did Keegan and LeZotte seek criminal background checks on Mr. Callender in connection with his application for the CEO position?
4. If any of the above conduct occurred, was it due to Mr. Callender's race?

Ms. Oppenheimer has completed her investigation, the Executive Summary of which is attached as Attachment 2. As noted in more detail in the Executive Summary, the investigator determined that for:

Issue 1: The allegations were not sustained
Issue 2: The allegations were sustained in part and not sustained in part.
Issue 3: The allegations were sustained
Issue 4: The allegations were not sustained

In summary, Ms. Oppenheimer determined that a preponderance of the evidence did not support a finding that the actions of Directors Keegan or LeZotte were based on race.

Review Process
Pursuant to Board Governance Process 6.19.3, upon the conclusion of an investigation into a complaint by a non-board member against a board member, the Chair of the Board shall be presented with the written results of the investigation. If the Chair of the Board is satisfied with the completeness of the investigation, he or she shall provide the Board with findings and any recommendations.

Following 6.19.3, I reviewed the investigative report during the 1st week of January 2021 while I was still in the capacity of the Chair of the Board. I did not solicit assistance from the Board Ethics and Conduct Ad Hoc Committee, and the committee had no role in my review.

Based on my review, I found the investigative report complete and consistent with the scope of services, and I do not have any separate recommendations to the Board as a result of my review. I'm submitting the Executive Summary of the investigation to the Board under this agenda item.

Next Step
Pursuant to Governance Process 6.19.3, following such review, any individual Board member may file a request for admonition, sanction, or censure. If such a request is filed, the subsequent procedure is set forth in Governance Process 6.19.5

Attachment-1 does not include the copy of agenda item 2.1 from Valley Water's September 13, 2011 board meeting Rev. Moore included in his email conveying the complaint.
Rev. Moore's August 10, 2020 letter is referenced on page 2 of the Executive Summary of the investigation by Amy Oppenheimer, Attachment 2.

FINANCIAL IMPACT:
There is no financial impact associated with this item.

CEQA:
The recommended action does not constitute a project under CEQA because it does not have the potential for resulting in direct or reasonably foreseeable indirect physical change in the environment.

ATTACHMENTS:
Attachment 1: 052720 Complaint, Rev. Jethroe Moore
Attachment 2: 011221 Confidential Executive Summary, Investigative Report
*Handout 4.1-A: Ms. Rita Norton Comment
*Handout 4.1-B: Rev J Moore

UNCLASSIFIED MANAGER:
Former Chairperson Nai Hsueh

THIS PAGE INTENTIONALLY LEFT BLANK

SAN JOSE/SILICON VALLEY BRANCH OF THE
NATIONAL ASSOCIATION FOR THE ADVANCEMENT OF COLORED PEOPLE
1313 North Milpitas Blvd Suite #163, Milpitas, CA 95035
Phone 408-991-4610

May 27, 2020

Santa Clara Valley Water District
5750 Almaden Expressway
San Jose, CA 95118-3686

Re: Records request.

I am disappointed to have to write this letter. However, it appears that we have a clear case of "managing while Black" occurring right here in Silicon Valley.

On behalf of the San Jose/Silicon Valley NAACP we demand an investigation into the likely unethical and likely illegal behaviors of Directors Barbara Keegan and Linda LeZotte.

White women's fear turning into Black men's being attacked is nothing new. Simply look at what's in the news right now. We live in an era with things like Ahmaud Arbery, where black men are targets and able to have their rights attacked.

As news of two Minneapolis police officers' role in the death of George Floyd, another unarmed Black man, spreads through the nation, the stakes of Amy Cooper's threat to Christian Cooper in New York's Central Park have also fit into the larger national dialogue on racism.

We now have two elected Directors on the Board of the Santa Clara Valley Water District allegedly coordinating with past Director Joe Judge in the past few months to oppose Mr. Rick Callender's promotion, releasing incomplete confidential personnel information to members of the public and media, and lobbying external people during the course of a confidential hiring process. Their request has been to solicit assistance to oppose Mr. Callender during his hiring process. Further, in clear violation of California state law at least one Director attempted to try and label Mr. Callender of being convicted of a variety of felonious criminal activities to try and keep him from obtaining the position. Director Keegan has been quoted to me to have said to several people that Mr. Callender would get the CEO position "over her dead body." Director Keegan started her harassing campaign even prior to the CEO position ever opening, by meeting with employees and others to attack Mr. Callender on a variety of fronts.

With the widely known investigation into the discriminatory issues which Mr. Callender was subjected to in an effort to have him either fired or quit between 2005 and 2013, I am surprised that Directors Keegan and LeZotte would pick up Joe Judges campaign to retaliate against Mr. Callender by using illegal and discriminatory tactics.

White America has long associated black men with criminality and hypersexuality. This fear of black men doesn't just come from racism, It's psychological. There is a body of work in literature and psychology that speaks to a historical tradition where some white people project the primal aggressions that they refuse to see in themselves onto black people.
Simply put, these two directors are trying to further stereotypical accusations and mistruths which its commonly known that Valley Water had to ultimately settle with Mr. Callender. I was directly engaged with Mr. Callender, and his legal team, during the time of his fighting Valley

Water and seeking a settlement to quash his claims of discrimination between 2007 and 2013, and I am well aware of the DFEH findings relative to the long history of discrimination against Mr. Callender, the manufacturing of complaints and findings to force him to quit or to be fired, and Joe Judge's direct leadership on these issues during the entire time. I am also aware of the DFEH findings which found that Valley Water was aware, and had acknowledged, the fact that they had engaged in investigations and drawn conclusions unsupported by facts relative to Mr. Callender specifically.
The fact that two Directors are actively engaging in this fashion appears to be a discriminatory and retaliatory attempt to harass Mr. Callender. For these Directors to coordinate with a man who constantly referred to Mr. Callender as King of the Black's and was alleged to have called him Nigger on several occasions and called for the CEO to fire him from at least 2006, is despicable. I have attached your own investigation relative to the Joe Judge findings which I refer for reference.

Further I understand that the two Directors who am asking to be investigated demanded that Mr. Callender undergo a criminal and civil background check for his candidacy as CEO. That has never been done with any other internal candidates, including with the current CEO which all the sitting Board members participated in that process. Does it sound to you like a different standard has been applied to Mr. Callender?

The Board has no choice but to investigate these Board members through its ethics committee. This is the right thing to do, as many of you are aware of this behavior. I would hope that as you did with Joe Judge, you employ an outside investigator to determine the facts.

As I said when I spoke during the item for consideration on the CEO, we will hold you accountable for your behaviors and actions. This is just the first step.
As a Board, you cannot allow these kinds of discriminatory and harassing actions to stand. Mr. Callender and all Valley Water employees deserve an environment free from this kind of discrimination and harassment.

On behalf of the San Jose/Silicon Valley NAACP I request an immediate investigation. I am more than willing to make myself available to provide more detailed information on who exactly the offending Directors have involved in their efforts. We have heard from many who are offended at the calls or the information which they have received. We believe they will be truthful.

Finally, I am requesting the following records request.
All emails, texts, records of phone calls and texts, other electronic communications on personal or Valley Water devices between, from, or to, the below individuals.

This includes external or internal parties between October 15 and May 28 regarding Mr. Rick Callender and his appointment as CEO. We understand there may be a cost and we are prepared to pay for costs associated.

Director Barbara Keegan
Director Linda LeZotte
Director Nai Hsueh
Former Director Joe Judge
Norma Camacho
Nina Hawk

In Community Spirit,

Pastor Jethroe Moore II, President

Website: http://www.sanjosenaacp.org **Email: sjnaacp@sanjosenaacp.org**

THIS PAGE INTENTIONALLY LEFT BLANK

OPPENHEIMER
INVESTIGATIONS
GROUP LLP

Executive Summary of Report Concerning Complaint Against:

SCVWD Directors Barbara Keegan and Linda Lezotte

Client: Santa Clara Valley Water District

Date: January 12, 2021

CONFIDENTIAL

EXECUTIVE SUMMARY OF INVESTIGATIVE REPORT

CONFIDENTIAL EXECUTIVE SUMMARY

I. INTRODUCTION, BACKGROUND, AND SCOPE

On July 27, 2020, Santa Clara Valley Water District ("VWD") retained Oppenheimer Investigations Group LLP (formerly the Law Offices of Amy Oppenheimer) to conduct an impartial investigation of a complaint dated May 27, 2020, brought by Reverend Jethroe Moore, President of the San Jose/Silicon Valley Branch of the National Association for the Advancement of Colored People ("NAACP"). Moore supplemented the complaint with a letter to the investigator dated August 10, 2020. Moore's complaint was directed against VWD Board Directors Barbara Keegan and Linda LeZotte, concerning their conduct in the hiring process for Rick Callender, VWD's Chief Executive Officer. Amy Oppenheimer was the principal investigator, assisted by Julie Matlof Kennedy.[1] Vida Thomas conducted a second level review of the report.

The essence of Moore's complaint was that Keegan and LeZotte acted to block Callender's appointment due to his race. Moore told the investigator that Callender had provided the specific information included in the complaint. After conducting interviews and reviewing the record, the investigator concluded that the complaint arose directly from Callender's experiences and perceptions. Accordingly, Callender and Moore were both considered complainants.

Based on the information in the two letters referred to above, along with the interviews of Moore and Callender, VWD asked the investigator to conduct an investigation addressing the following questions:

1. Did Keegan and LeZotte release confidential information from Callender's personnel or EEO files to the media and the public?

2. Did Keegan and LeZotte spread information about Callender being a sexual harasser or a convicted felon as part of their "lobbying" against his appointment to the CEO position?

3. Did Keegan and LeZotte seek criminal background checks on Callender in connection with his application for the CEO position?

4. If any of the above conduct occurred, was it due to Callender's race?

II. WITNESSES AND DOCUMENTS

The investigators conducted interviews of fifteen individuals, including all seven board members. The investigators also reviewed extensive documentation.

A. Witnesses

Consistent with professional investigative standards, the investigators interviewed witnesses who were most likely to have direct information about contested facts. The investigators first sought evidence from current VWD directors and employees, with the aim of minimizing public disclosure of confidential information. In the interest of confidentiality and avoiding needless expense, the investigators did not seek information that would be cumulative or unrelated to contested issues. In some cases, the

[1] The Board's response to the complaint, including the retention of the investigator, was undertaken pursuant to Governance Policies updated as of December 10, 2019, specifically Governance Policies 6.15-6.19.

investigators sought to interview witnesses outside the agency. Some of those individuals agreed to be interviewed, whereas others declined.

Also in accordance with standard investigative practice, the investigators did not seek to interview members of the press or legal counsel. Members of the press customarily refuse to divulge information they received from sources. Moreover, attempting to interview members of the press almost inevitably leads to media coverage of the confidential investigation. Likewise, attorneys must assert privilege with regard to their communications with clients and it is rare that they are interviewed as witnesses.

It is important to note Reverend Moore's statement that all of his allegations were based on information provided to him by Callender. Callender said the same thing. Thus, in determining whom to interview, the investigators relied heavily on Callender's detailed allegations and his statements about which witnesses had first-hand knowledge of the relevant facts.

With that background, the following information is provided:

1. Witnesses Interviewed

The investigators interviewed Reverend Moore, Callender, Keegan, LeZotte, Estremera, Santos, Kremen, Varela, and Hsueh. In addition, the investigators interviewed six witnesses identified herein by their initials for purposes of confidentiality: NC, AN, RG, MC, ME, and DG.[2]

2. People Who Declined to Speak with the Investigators

The investigators attempted to schedule interviews with BN, NH, and JJ. None of those witnesses responded to the request for an interview.

3. Other People Identified but Not Interviewed

As noted above, the investigators did not interview members of the press (e.g., JW or DP) or legal counsel.

There were several people whose names came up in connection with uncontested facts; there was no reason to interview such people. For example, Keegan and LeZotte said that they believed a criminal background check should be done. Thus, it was not necessary to interview other witnesses (LB, MR, OL, PM, and TV) who were said to have knowledge of this.

Callender described the involvement of nearly all the other people listed by Moore as potential witnesses. With regard to several of them (e.g., OL, PM, and LB), Callender said they were recipients of second or third hand reports of various events. The investigators chose to interview witnesses with more direct knowledge rather than people who would be able to provide only attenuated hearsay.

With regard to the former employee (AC) who obtained a copy of a document from Callender's EEO file, it was determined that there was no reason to interview him. The witness who gave AC the document was interviewed; she said he returned it two days later. There was no evidence from Callender or

[2] Other than Moore, Callender, Keegan, LeZotte, and the remaining directors, all actual or potential witnesses are identified by their initials for reasons of confidentiality.

anyone else to suggest that AC ever gave the document to Keegan or LeZotte. Keegan and LeZotte both denied having the document at any point. LeZotte and Hsueh said that LeZotte read from an entirely different document during a closed session Board meeting. (See below.) Moreover, there was information that AC left VWD on bad terms and had a contentious relationship with Callender and thus interviewing him might not be in Callender's or the agency's best interests. Given how remote it was that he would provide relevant information, it was determined it was neither necessary nor desirable to interview AC.[3]

One of the directors said that AR (an aide to a public official) had a personal grievance with Callender and might have spoken with Keegan. Callender said he believed Keegan and LeZotte spoke with AR but he provided no details.[4] The investigator determined that an interview with this third party witness was not likely to be revelatory.

There was no specific evidence of or allegation concerning the role of another third party, DD. His name was included on a list of potential witnesses without any link to a specific event. Not one of the other witnesses (including Moore himself) ever mentioned him during an interview. Thus, he was not interviewed.

There was evidence that another third party (SS) spoke to ME and made disparaging remarks about Callender. The investigator interviewed ME, who described those remarks. Therefore there was no need to seek cumulative evidence through a subsequent interview of SS.

B. Documents

Moore and Callender accused Keegan and LeZotte of racism based on their spreading rumors that Callender had sexually harassed employees at VWD and had a criminal background. They asserted the two directors were sexualizing a Black man and making false allegations against him based on racist beliefs.

Because of these assertions, the complaint could not be investigated without making a determination as to the basis for Keegan and LeZotte's beliefs. This investigation disclosed that in 2008 VWD did do an internal investigation of a sexual harassment complaint against Callender. It also turned out that Callender did have a conviction for some sort of assault. Callender asserted, however, that each of these findings was a result of racism.

Thus, the complete file for the investigation of the 2008 complaint (consisting of hundreds of pages) was reviewed to determine if it was a fair and thorough investigation and whether the findings were consistent with the evidence gathered. This investigation also included a review of a 2008 ethics investigation involving Callender, the record of other complaints brought both by and against Callender, DFEH records, and documents relating to Callender's 2013 settlement with VWD.

---

[3] Likewise, there was no reason to interview TY, an employee who was not involved with the maintenance of the EEO files.

[4] In the same part of his interview, Callender mentioned a possible conversation between Keegan and LeZotte and an employee (TV). Again, because neither Callender nor any other witness ever mentioned anything specific about TV, the investigator deemed it unnecessary to pursue an interview.

III. FINDINGS

A. 2008 Investigations

As stated above, Keegan and LeZotte were accused by Moore and Callender of racism by their sexualizing a Black man and making false allegations against him based on racist beliefs. If the sexual harassment allegations were false, that would be evidence that their opposition was, indeed, nefarious and perhaps racist. By asserting this theory, Moore and Callender put at issue the basis for Keegan and LeZotte's actions and whether those actions were reasonable and done in good faith or whether they were a subterfuge for racism.

The document review led a determination that the 2008 investigation of a sexual harassment complaint against Callender was thorough and fair. There was no reason to believe it was impacted by racism – in fact the lead investigator was a Black woman. Callender was found to have violated VWD's policies against harassment. In a separate report (which also appeared to have been thorough and fair), Callender was found to have engaged in ethics violations.

Callender asserted that these findings were set aside or expunged as a result of a 2013 settlement of a different matter. However, although Callender tried to have the findings expunged as part of that settlement, VWD did not agree to that.

The question, then, was whether Keegan's and LeZotte's consideration of the 2008 sexual harassment finding against Callender, in determining whether Callender should be CEO, was reasonable or whether it was racist. The related inquiry was whether they made false statements or accessed confidential documents during the process.

With this in mind, the following findings were made.

B. Did Keegan and LeZotte release confidential information from Callender's personnel or EEO files to the media and the public?

Not sustained. A preponderance of the evidence did not support a finding that Keegan or LeZotte released confidential information from Callender's personnel file or EEO file to the media or the public.

The basis for the contention that Keegan and/or LeZotte released confidential information about Callender was twofold. First, a document from his personnel file (apparently the draft 2008 report concerning the sexual harassment allegations) was printed and taken home by an employee when it should not have been. Second, LeZotte read aloud from something during a Board meeting that was held via Zoom and Board members were unsure what she was reading from.

There was evidence that Callender's personnel file was compromised, however there was no evidence that that documents were given to anyone. LeZotte said what she read out loud from was a complaint filed in Superior Court, which is a public document. She produced it during this investigation.[5] Given this evidence, which was found to be credible, it could not be found that either Keegan or LeZotte released confidential information about Callender.

[5] Exhibit 1 hereto consists of pages 1 and 11, redacted to protect the privacy of the plaintiff. LeZotte said she read from Paragraph 41 on page 11 during a closed session Board meeting.

C. Did Keegan and LeZotte spread information about Callender being a sexual harasser or a convicted felon as part of their "lobbying" against his appointment to the CEO position?

Sustained in part and not sustained in part. A preponderance of the evidence supported a finding that both Keegan and LeZotte discussed their concerns about Callender engaging in sexual harassment with Board members and others. A preponderance of the evidence did not support a finding that either of them referred to Callender as a "convicted felon" but did support a finding that Keegan brought up Callender's criminal background on at least one occasion.

There was considerable evidence that Board members discussed Callender's appointment with each other and with other individuals. Whether this is correctly considered "lobbying" was unclear. Further, whether the discussions were inappropriate or would violate rules, policies, laws or expectations was beyond the scope of this investigation.

Keegan and LeZotte were not alone in this – it was undisputed that Callender and all of the Directors engaged in conversations among themselves and with others about the CEO search. In addition to conversations between and among all of the board members, Keegan spoke to eight non-board members and one member of the media (though there was no evidence Keegan initiated that contact) and LeZotte spoke to two non-board members. Additionally, Kremen spoke to a member of the media, and Kremen, Estremera, Santos and Varela all spoke to one or more non-board members. Callender also spoke to numerous members of the public and to four board members (Kremen, Estremera, Santos and Varela).

As for what Keegan and LeZotte said, a preponderance of the evidence did not support a finding that either Keegan or LeZotte referenced a "deep criminal history," a felony, multiple affairs, or fathering a child with a VWD employee. However, there was evidence that Keegan, on one or two occasions, referenced past criminal charges (though not specifically a felony), which was a true statement.

There was a text from Keegan to Kremen asking if a reporter, Pulcrano, killed a "Rick expose article," Keegan provided a detailed explanation of the context. She said another journalist, Wadsworth, called Keegan and said Pulcrano was treating an article about Callender "differently" and was trying to "kill" it. Therefore, Keegan said, she sent Kremen, who is a friend of Pulcrano's, a text asking about this. This was evidence that she was speaking to the press about Callender, though not evidence that she initiated the conversations.

For the foregoing reasons, a preponderance of the evidence supported a finding that Keegan and LeZotte spoke to other Board members about the CEO search and expressed concerns about Callender's history of sexual harassment during those conversations. Further, a preponderance of the evidence supported a finding that Keegan (and in two instances LeZotte) spoke to others about Callender's application to become CEO to gauge support for him, at times bringing up the past charges of sexual harassment and once (by Keegan) bringing up his criminal record.

D. Did Keegan and LeZotte seek criminal background checks on Callender in connection with his application for the CEO position?

Sustained. A preponderance of the evidence supported a finding that Keegan and LeZotte suggested that a criminal background check be done on Callender.

LeZotte and Keegan both admitted suggesting a criminal background check, so to that extent this issue was uncontested.

Hsueh said the question of doing a criminal background check on applicants was raised early in the process and she thought there was agreement on this but that later Estremera and Santos felt strongly that a background check should not be done on an internal candidate.

Thus, while there is no question that Keegan and LeZotte supported doing a criminal background check, as did some other directors, and that at some point in the process Estremera and Santos did not, when and why there were dissenting views was harder to parse out.

The issue of who sought a criminal background check, when, and why, was difficult to track due to a number of factors. First, the contract with the search firm stated that there would be a background check on finalists, suggesting that doing so was a *fait accompli*. Second, witnesses tended to conflate a criminal background check with a generic background check, making it hard to determine who was advocating for or against which. Third, witnesses also tended to conflate doing a background check in the beginning of the search with the doing so on finalists and with doing so for the final candidate of choice before an offer was made, which was what was ultimately done here. Thus, the significance of this issue is ambiguous.

Nevertheless, given the evidence, a finding could be made that Keegan and LeZotte did want such a background check to be done.

E. If any of the above conduct occurred, was it due to Callender's race?

Not sustained. A preponderance of the evidence did not support a finding that Keegan and/or LeZotte's actions were based on race.

The evidence is that Keegan and LeZotte believed there were serious allegations of sexual harassment against Callender that had been sustained via an internal investigation and that consideration of this was relevant to whether Callender was suitable to be CEO. The evidence also established that there was a reasonable basis for their belief as it was supported by documentary evidence.

Reasonable minds can differ on the relevance of these findings to Callender's fitness to be CEO – while they did appear to be serious, they were also twelve years old. It seems likely that some people would believe findings of sexual harassment would be relevant in decisions on hiring, even if twelve years old.

But raising and discussing Callender's past sexual harassment cannot fairly be considered, in and of itself, racist. It is also unreasonable to conclude that there is a pattern of racism simply because Keegan and LeZotte voted against Camacho, a woman of Color, in the 2017 CEO selection. (This was the other reason given by some board members for the conclusion that Keegan and LeZotte's vote was due to racism.) There was unconverted evidence that Keegan voted for a Black man rather than Camacho, dispelling this argument.

The other reasons raised for concluding Keegan and/or LeZotte were racist were insubstantial. Kremen said LeZotte rolled her eyes when discussing diversity (which she disputed). Callender said he heard a rumor that twelve or thirteen years ago, Keegan said a competitor for a position was selected only because he was Black. Keegan, on the other hand, said she was not selected for a number of positions

for which she thought she was more qualified, and one of them was given to a Black man, but she did not say he got the position because he is Black. These allegations, along with the vote against Camacho, the concerns raised by Keegan and LeZotte about sexual harassment and advocating for a background check, were the only bases for the accusations of racism given by Reverend Moore, Callender and the four board members who voted for Callender.

Certainly, there are ugly racial stereotypes linking Black men to hypersexuality. In the United States there is also a history of false claims of rape and sexual assault against Black men. Had there not been competent evidence of sexual harassment and a criminal conviction Keegan and LeZotte's bringing these things up could certainly be seen as racist. However, that was not the case here. Rather, there was evidence of Callender's past harassment and that it had impacted the work environment at VWD.

Given Keegan and LeZotte's good faith, reasonable concerns about Callender's past actions, coupled with the lack of evidence of racial animus, a preponderance of the evidence did not support a finding that Keegan's or LeZotte's actions were due to Callender's race.

Respectfully submitted,

Amy Oppenheimer

Julie Matlof Kennedy

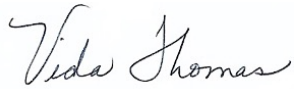

Vida Thomas

Exhibit 1

KAMAU EDWARDS (SBN 230826)
4096 Piedmont Avenue
Suite 174
Oakland, CA 94611
Telephone: (415) 271-2093

Attorney for Plaintiff

FILED Santa Clara Co
07/27/09 11:16am
David H. Yamasaki
Chief Executive Offic
By: sgancayco DTSC:VD
R#200900081535
CK $300.00
TI $300.00
Case: 1-09-CV-148445

IN THE SUPERIOR COURT IN THE STATE OF CALIFORNIA

FOR THE COUNTY OF SANTA CLARA

[redacted], Plaintiff, vs. SANTA CLARA VALLEY WATER DISTRICT, et. al., ENRICO CALLENDER (a.k.a. RICK CALLENDER), an individual, and DOES 1 through 50, inclusive, Defendant.	Case No.: 109CV148445 COMPLAINT: 1. Sexual Harassment and Hostile Work Environment[Gov. Code § 12940(j)(1)]; 2. Failure to Prevent Harassment and Discrimination [Gov. Code §§ 12940(j)(3) & (k)]; 3. Retaliation [Gov. Code § 12940(h)]; 4. Gender Violence [Civil Code §52.4]; 5. Assault; 6. Battery; 7. Intentional Infliction of Emotional Distress; 8. Defamation. JURY TRIAL REOUESTED

41. The investigation continued until on or about May 2008. Plaintiff was told that after interviewing more than twenty individuals that they finally decided to stop because they were certain they had enough information and that otherwise they could have kept on going. Plaintiff was told that her complaint was sustained and that they were recommending that Callender be terminated for the findings of the investigation. They also informed Plaintiff that ultimately the decision was up to the CEO. Plaintiff again expressed her concern that the same CEO he had bragged about getting hired would be the one in charge of deciding his punishment.

42. As Plaintiff had feared, the CEO decided to ignore the recommendation of the EEO investigators and to keep Callender employed with SCVWD. He was apparently "demoted" but less than four months later his position was reinstated.

43. As a result of the decision of SCVWD to maintain employment of Callender, Plaintiff continues to be exposed to him. Both the Office of Government Relations and the Office of Public Relations works closely with the CEO and the Board of Directors. This means that on numerous occasions Plaintiff has been subjected to being in Callender's presence and that she will continue to be in jeopardy of having to encounter him. On these encounters Callender has leered at Plaintiff. Causing her extreme distress. On one instance Callender smiled at her in a sarcastic manner, which she felt implied that he knew he had "won."

44. Plaintiff has missed opportunities for career advancement because Callender is still employed at the district. He has accepted meeting invitations that he never attends, that Plaintiff would have otherwise been assigned to, but to which she could not attend because of his presence. Plaintiff was going to be assigned to work on the future funding campaign, but because of his involvement the assignment was given to someone else.

45. Plaintiff continues to fear for the future of her career at SCVWD, because she knows what Callender is capable of doing and has seen him get away with it. Callender is in a position, by his very presence at SCVWD to prevent career growth and advancement of Plaintiff and to continue to defame her and damage her professional reputation.

46. Defendant Employer is strictly liable for the acts of Callender, a supervisory employee of Defendant Employer, under Government Code §12940(j)(1).

THIS PAGE INTENTIONALLY LEFT BLANK

January 22, 2021

Dear Former Chairperson Nai Hsueh and Valley Water Board Members:

> Item: - Tuesday, January 26, 2021 6:00 PM
> 4. BOARD OF DIRECTORS: Report of Former Board of Directors Chairperson Nai Hsueh, Upon Review of Investigation of May 27, 2020 Complaint Filed by Rev. Jethroe Moore, Against Directors Keegan and LeZotte. 4.1. 21-0066 Review and Consider Findings in the Executive Summary of the investigative report. Recommendation: Manager: Former Chairperson Nai Hsueh

Environmental Justice is of utmost importance and needs to be a Valley Water priority –
This can best be accomplished in an atmosphere of respect, civility and lack of name-calling.

Moving forward, Valley Water requires leadership that promotes full disclosure of information by interested and informed parties, allows for and listens to analysis that may include criticism, and does not retaliate with accusations of racism and/or elitism. Those appointed to leadership positions should be required to withhold to this standard in their comments both while on duty and in their other roles while under employment with the District.

Adoption of forthcoming direction from your Body should give full consideration to conveying this message.

Sincerely,
Rita Norton
Past Chair, Environmental Advisory Committee

THIS PAGE INTENTIONALLY LEFT BLANK

Michele King

Subject: FW: Dear Chair, Estremera and members of the Board
Attachments: Tony Estremera.doc; Callender Executed Settlement Agreement.pdf; Copy of DFEH findings 2012.pdf; Copy of Claim against SCVVWD Joe Judge et. al.pdf; Copy of Settlement Offer 3 re Dir Judge (1).pdf; Ms. Amy Oppenheimer.docx

---

From: Jethroe Moore <moore2j@att.net>
Sent: Monday, January 25, 2021 12:32 PM
To: Clerk of the Board <clerkoftheboard@valleywater.org>; Board of Directors <board@valleywater.org>
Subject: Dear Chair, Estremera and members of the Board

January 23, 2021

Chair Tony Estremera
Santa Clara Valley Water District
5750 Almaden Expressway
San Jose, CA 95118

Dear Chair, Estremera and members of the Board;

After review of the Oppenheimer report, on behalf of the San Jose Silicon Valley NAACP (SJ/SV NAACP) I want to register the fact that the accusations which the SJ/SV NAACP had lodged were likely intentionally misrepresented, and many of our allegations were clearly neither investigated nor addressed. Additionally, after following the last several board meetings, further investigations are in order relative to conflict of interest directly related to this issue.

This "thorough" investigation appears to have sought rationale to try and rehash settled, always disputed, and debunked decades-old assertions, instead of examining the current issues about Directors LeZotte's and Keegan's unethical public and private behaviors during the course of the CEO hiring process. From what the Oppenheimer report states, it appears Valley Water asked for an investigation to make it a referendum on Mr. Callender and why the Directors attacked him. Was its Valley Water District Counsel who tried to turn this investigation on Mr. Callender as a retaliatory effort due to the SJ/SV NAACP complaint about the violations of Mr. Callender's rights?

This investigation is far from thorough and completely glosses over, misrepresents, and ignores most of the SJ/SV NAACP's complaints. Further, Ms. Oppenheimer even confirms that she discounted interviewing at least one person I said was necessary for the investigation simply because I alone mentioned the need to interview this witness. This is absolutely not thorough. As such, I will be filing a complaint with the FPPC to investigate the below newly identified issues, and will strongly urge Mr. Callender to file a complaint with the DFEH and/or the EEOC so that he can move toward having them conduct a real investigation of the facts and our prior complaints, and obtain justice. To be clear, the Oppenheimer assertion that the SJ/SV NAACP was a joint complaint with Mr. Callender is completely false. This was the

complaint of the SJ/SV NAACP to seek justice for a process which was unethical, unfair and unjust in the treatment of an African American executive.

I note that Ms. Oppenheimer makes mention of Mr. Callender's settlement with Valley Water, however she neglects to include any of the findings or documentation of the DFEH as it relates to the issues of the "investigations" of Mr. Callender, or the terms and assertions that Mr. Callender demanded and provided over a decade ago. I have attached all the documents which I sent to Ms. Oppenheimer for her consideration of my prior complaint, of which she mentions none. I am genuinely concerned that the Oppenheimer investigation does not touch on, or mention, any of the facts in the attached documents, making their investigation appear clearly biased, especially due to the direction she notes was given from Valley Water General Counsel as it related to what to actually investigate.

I am not surprised that Ms. Oppenheimer added a female African American attorney to the signature list of her investigation, to make her findings appear more credible. However, it should be mentioned that the investigation was led in its entirety by two Caucasian women, who conducted all interviews. From my understanding, the African American woman was not present in any of the interviews. This addition of a person who did not participate in any of the interviews does not make the investigation more credible or believable.

Ms. Oppenheimer in her own investigation has pointed out that many critical witnesses, such as the past employee who had violated policy and taken home Mr. Callender's personal employee files, the past employee who was a direct source of information about the retaliatory campaign, and several other critical witnesses, all were not interviewed. The rationale for not interviewing some of the individuals makes little to no sense except that, as she noted, it was to protect Valley Water from liability. How is this thorough? This is not a reason to ignore interviewing several key witnesses who likely have critical information relevant to the accusations and assertions of wrongdoing.

As a reminder of the issues which the SJ/SV NAACP requested to be investigated, I will restate our complaints below.

1. **Directors Keegan and LeZotte engaged in a retaliatory campaign against Mr. Rick Callender due to his past complaints, settlements and DFEH findings against past Director Joe Judge.**

   There was no attempt to investigate this issue at all, it appears.

2. **Directors Keegan and LeZotte arranged for and/or participated in the stealing and release of confidential employee files of Mr. Callender. The release of partial and confidential information contained in the files of Mr. Callender was an intentional attempt to violate Mr. Callender's right to privacy, harass Mr. Callender, and was a retaliatory strike due to Mr. Callender's settlements, and an attempt to malign his good character and reputation.**

   Critical witnesses were not interviewed intentionally as it relates to this issue. It is obvious from the investigative report that Valley Water's direction through their General Counsel's office was to try and mitigate the liability of the actions of Director's Keegan and LeZotte by trying to provide rationale and support for their unethical actions.

3. **Directors Keegan and LeZotte violated The Fair Chance Act (Assembly Bill No. 1008), Government Code § 12952 which makes it illegal for employers in California to ask about, or investigate, the criminal record of job applicants before making a job offer. This was an attempt to harass and discriminate against Mr. Callender.**

The report does confirm that at least Director Keegan was involved in trying to conduct an illegal, self-led investigation before the interview process had even begun. This was again glossed over and described as Directors Keegan and LeZotte simply asking for a criminal report to be conducted. Even the evidence in the report notes that there was a Director-led inquiry prior to a job offer being made. This is obviously an attempt to limit liability on Valley Water and Directors Keegan and LeZotte.

4. **Directors Keegan and LeZotte intentionally attempted to malign Mr. Callender's reputation with local media, and the general public, and tried to promote false and misleading stories about him. This was an attempt to harass and discriminate against Mr. Callender.**

   The report ignores this issue and does not opine. Instead the Oppenheimer report seeks to try and publicly support and endorse the public claims of Directors Keegan and LeZotte.

5. **Directors Keegan and LeZotte engaged in a public campaign, which included speaking with Valley Water staff, Directors, and other elected officials, to blacklist Mr. Callender. This was an obvious attempt to try and prevent Mr. Callender from applying for, or obtaining, the job of CEO, by trying to force him to quit, or to ultimately be fired, and as such violated at minimum the spirit of Labor Code (§1050-1053). This was an obvious attempt to harass and discriminate against Mr. Callender.**

   The report does not address the actions of Directors Keegan and LeZotte which started before the application process even began.

I hope that the Board now investigates the new issues I have detailed below which have occurred in public and likely in private.

Santa Clara Valley Water District Governance Policy 6 states "The Board commits itself and its members to ethical, business-like, and lawful conduct, including proper use of authority and appropriate decorum when acting as Board members." The SJ/SV NAACP believes that Directors LeZotte and Keegan have violated this policy in several ways, detailed below:

1. Directors LeZotte and Keegan have a conflict of interest which is reasonably foreseeable to impact their personal financial interest, however they still engaged in trying to influence Board discussions on the investigation.

2. Director LeZotte attempted to influence District Counsel to interfere with the investigation of herself in order to support a more favorable contract for District Counsel, and District Counsel has attempted to interfere with the investigation of Directors LeZotte and Keegan.

1. Directors LeZotte and Keegan have a conflict of interest which is reasonably foreseeable to impact their personal financial interest, however they still engaged in trying to influence Board discussion on the investigation.

Under state law and Valley Water policy, a public official has a disqualifying conflict of interest in a governmental decision if it is foreseeable that the decision will have a financial impact on his or her personal finances or other financial interests. In such cases, there is a risk of biased decision-making that could sacrifice the public's interest in favor of the official's private

financial interests. To avoid actual bias or the appearance of possible improprieties, the public official is prohibited from participating in the decision.

It is reasonably foreseeable that the nature of the SJ/SV NAACP's complaint could potentially lead to Director LeZotte and Keegan being held personally liable for discrimination and harassment lawsuits which would impact their personal finances.

Director LeZotte's and Director Keegan's direct and active participation, rather than recusing themselves, in attempting to influence the investigation by demanding during public session details from District Counsel and the Chair about the investigation, and Director LeZotte's attempt to make a motion during the 11/24/20 board meeting to try and influence the outcome of the investigation is a clear conflict of interest and an ethical violation requiring investigation.

2. Director LeZotte attempted to influence District Counsel to interfere with the investigation of herself in order to support a more favorable contract for District Counsel, and District Counsel has attempted to interfere with the investigation of Directors LeZotte and Keegan.

Director LeZotte was directly involved in the sudden re-negotiation of the Valley Water District Counsel's contract and pushed for unreasonably favorable terms. While these negotiations were underway for District Counsel's contract, District Counsel attempted to interfere with the investigation called for by the SJ/SV NAACP, by calling two staff members to ask that they call witnesses named in the SJ/SV NAACP's complaint to make them aware of the accusations in the complaint.

Neither of the witnesses had knowledge that they were even named in the complaint, which was never made public. There appears to be a clear link with Director LeZotte and the District Counsel attempting to influence the outcome of the investigation and Director LeZotte trying to assist District Counsel with the favorable contract terms. An investigation is required to determine if these two actions are indeed tied and to what degree the ongoing investigation was tainted as a result of District Counsel and Director LeZotte.

District Counsel's direction to the investigator is also obvious and clear evidence of bias.

A secondary investigation is obviously required to deal with the above conflict of interest issues and known attempts to influence the outcome of the investigation of Directors Keegan and LeZotte.

The SJ/SV NAACP sees these issues as overlapping and related to all of the SJ/SV NAACP's complaints.

I am again filing this written complaint with the hope that the Board Ethics and Conduct Ad Hoc Committee will impartially, fully, and fairly investigate and provide findings to the Board, in addition to ensuring that the Oppenheimer investigation is re-conducted and/or evaluated by another independent firm with instructions to look at our actual complaint versus trying to incorrectly investigate things which do not lead toward evaluating the true nature of our complaint.

In Community Spirit,

Rev. Jethroe Moore II

SAN JOSE/SILICON VALLEY BRANCH OF THE
NATIONAL ASSOCIATION FOR THE ADVANCEMENT OF COLORED PEOPLE

1313 North Milpitas Blvd Suite #163, Milpitas, CA 95035
Phone 408-991-4610

January 23, 2021

Chair Tony Estremera
Santa Clara Valley Water District
5750 Almaden Expressway
San Jose, CA 95118

Dear Chair, Estremera and members of the Board;

After review of the Oppenheimer report, on behalf of the San Jose Silicon Valley NAACP (SJ/SV NAACP) I want to register the fact that the accusations which the SJ/SV NAACP had lodged were likely intentionally misrepresented, and many of our allegations were clearly neither investigated nor addressed. Additionally, after following the last several board meetings, further investigations are in order relative to conflict of interest directly related to this issue.

This "thorough" investigation appears to have sought rationale to try and rehash settled, always disputed, and debunked decades-old assertions, instead of examining the current issues about Directors LeZotte's and Keegan's unethical public and private behaviors during the course of the CEO hiring process. From what the Oppenheimer report states, it appears Valley Water asked for an investigation to make it a referendum on Mr. Callender and why the Directors attacked him. Was its Valley Water District Counsel who tried to turn this investigation on Mr. Callender as a retaliatory effort due to the SJ/SV NAACP complaint about the violations of Mr. Callender's rights?

This investigation is far from thorough and completely glosses over, misrepresents, and ignores most of the SJ/SV NAACP's complaints. Further, Ms. Oppenheimer even confirms that she discounted interviewing at least one person I said was necessary for the investigation simply because I alone mentioned the need to interview this witness. This is absolutely not thorough. As such, I will be filing a complaint with the FPPC to investigate the below newly identified issues, and will strongly urge Mr. Callender to file a complaint with the DFEH and/or the EEOC so that he can move toward having them conduct a real investigation of the facts and our prior complaints, and obtain justice. To be clear, the Oppenheimer assertion that the SJ/SV NAACP was a joint complaint with Mr. Callender is completely false. This was the complaint of the SJ/SV NAACP to seek justice for a process which was unethical, unfair and unjust in the treatment of an African American executive.

I note that Ms. Oppenheimer makes mention of Mr. Callender's settlement with Valley Water, however she neglects to include any of the findings or documentation of the DFEH as it relates to the issues of the "investigations" of Mr. Callender, or the terms and assertions that Mr. Callender demanded and provided over a decade ago. I have attached all the documents which I sent to Ms. Oppenheimer for her consideration of my prior complaint, of which she mentions none. I am genuinely concerned that the Oppenheimer investigation does not touch on, or mention, any of the facts in the attached documents, making their investigation appear clearly biased, especially due to the direction she notes was given from Valley Water General Counsel as it related to what to actually investigate.

I am not surprised that Ms. Oppenheimer added a female African American attorney to the signature list of her investigation, to make her findings appear more credible. However, it should be mentioned that the investigation was led in its entirety by two Caucasian women, who conducted all interviews. From my understanding, the African American woman was not present in any of the interviews. This addition

of a person who did not participate in any of the interviews does not make the investigation more credible or believable.

Ms. Oppenheimer in her own investigation has pointed out that many critical witnesses, such as the past employee who had violated policy and taken home Mr. Callender's personal employee files, the past employee who was a direct source of information about the retaliatory campaign, and several other critical witnesses, all were not interviewed. The rationale for not interviewing some of the individuals makes little to no sense except that, as she noted, it was to protect Valley Water from liability. How is this thorough? This is not a reason to ignore interviewing several key witnesses who likely have critical information relevant to the accusations and assertions of wrongdoing.

As a reminder of the issues which the SJ/SV NAACP requested to be investigated, I will restate our complaints below.

1. **Directors Keegan and LeZotte engaged in a retaliatory campaign against Mr. Rick Callender due to his past complaints, settlements and DFEH findings against past Director Joe Judge.**

   There was no attempt to investigate this issue at all, it appears.

2. **Directors Keegan and LeZotte arranged for and/or participated in the stealing and release of confidential employee files of Mr. Callender. The release of partial and confidential information contained in the files of Mr. Callender was an intentional attempt to violate Mr. Callender's right to privacy, harass Mr. Callender, and was a retaliatory strike due to Mr. Callender's settlements, and an attempt to malign his good character and reputation.**

   Critical witnesses were not interviewed intentionally as it relates to this issue. It is obvious from the investigative report that Valley Water's direction through their General Counsel's office was to try and mitigate the liability of the actions of Director's Keegan and LeZotte by trying to provide rationale and support for their unethical actions.

3. **Directors Keegan and LeZotte violated The Fair Chance Act (Assembly Bill No. 1008), Government Code § 12952 which makes it illegal for employers in California to ask about, or investigate, the criminal record of job applicants before making a job offer. This was an attempt to harass and discriminate against Mr. Callender.**

   The report does confirm that at least Director Keegan was involved in trying to conduct an illegal, self-led investigation before the interview process had even begun. This was again glossed over and described as Directors Keegan and LeZotte simply asking for a criminal report to be conducted. Even the evidence in the report notes that there was a Director-led inquiry prior to a job offer being made. This is obviously an attempt to limit liability on Valley Water and Directors Keegan and LeZotte.

4. **Directors Keegan and LeZotte intentionally attempted to malign Mr. Callender's reputation with local media, and the general public, and tried to promote false and misleading stories about him. This was an attempt to harass and discriminate against Mr. Callender.**

   The report ignores this issue and does not opine. Instead the Oppenheimer report seeks to try and publicly support and endorse the public claims of Directors Keegan and LeZotte.

5. **Directors Keegan and LeZotte engaged in a public campaign, which included speaking with Valley Water staff, Directors, and other elected officials, to blacklist Mr. Callender. This was an obvious attempt to try and prevent Mr. Callender from applying for, or obtaining, the job of CEO, by trying to force him to quit, or to ultimately be fired, and as such violated at minimum the spirit of Labor Code (§1050-1053). This was an obvious attempt to harass and discriminate against Mr. Callender.**

   The report does not address the actions of Directors Keegan and LeZotte which started before the application process even began.

I hope that the Board now investigates the new issues I have detailed below which have occurred in public and likely in private.

Santa Clara Valley Water District Governance Policy 6 states "The Board commits itself and its members to ethical, business-like, and lawful conduct, including proper use of authority and appropriate decorum when acting as Board members." The SJ/SV NAACP believes that Directors LeZotte and Keegan have violated this policy in several ways, detailed below:

1. **Directors LeZotte and Keegan have a conflict of interest which is reasonably foreseeable to impact their personal financial interest, however they still engaged in trying to influence Board discussions on the investigation.**

2. **Director LeZotte attempted to influence District Counsel to interfere with the investigation of herself in order to support a more favorable contract for District Counsel, and District Counsel has attempted to interfere with the investigation of Directors LeZotte and Keegan.**

1. **Directors LeZotte and Keegan have a conflict of interest which is reasonably foreseeable to impact their personal financial interest, however they still engaged in trying to influence Board discussion on the investigation.**

Under state law and Valley Water policy, a public official has a disqualifying conflict of interest in a governmental decision if it is foreseeable that the decision will have a financial impact on his or her personal finances or other financial interests. In such cases, there is a risk of biased decision-making that could sacrifice the public's interest in favor of the official's private financial interests. To avoid actual bias or the appearance of possible improprieties, the public official is prohibited from participating in the decision.

It is reasonably foreseeable that the nature of the SJ/SV NAACP's complaint could potentially lead to Director LeZotte and Keegan being held personally liable for discrimination and harassment lawsuits which would impact their personal finances.

Director LeZotte's and Director Keegan's direct and active participation, rather than recusing themselves, in attempting to influence the investigation by demanding during public session details from District Counsel and the Chair about the investigation, and Director LeZotte's attempt to make a motion during the 11/24/20 board meeting to try and influence the outcome of the investigation is a clear conflict of interest and an ethical violation requiring investigation.

2. **Director LeZotte attempted to influence District Counsel to interfere with the investigation of herself in order to support a more favorable contract for District Counsel, and District Counsel has attempted to interfere with the investigation of Directors LeZotte and Keegan.**

Director LeZotte was directly involved in the sudden re-negotiation of the Valley Water District Counsel's contract and pushed for unreasonably favorable terms. While these negotiations were underway for District Counsel's contract, District Counsel attempted to interfere with the investigation called for by the SJ/SV NAACP, by calling two staff members to ask that they call witnesses named in the SJ/SV NAACP's complaint to make them aware of the accusations in the complaint.

Neither of the witnesses had knowledge that they were even named in the complaint, which was never made public. There appears to be a clear link with Director LeZotte and the District Counsel attempting to influence the outcome of the investigation and Director LeZotte trying to assist District Counsel with the favorable contract terms. An investigation is required to determine if these two actions are indeed

tied and to what degree the ongoing investigation was tainted as a result of District Counsel and Director LeZotte.

District Counsel's direction to the investigator is also obvious and clear evidence of bias.

A secondary investigation is obviously required to deal with the above conflict of interest issues and known attempts to influence the outcome of the investigation of Directors Keegan and LeZotte.

The SJ/SV NAACP sees these issues as overlapping and related to all of the SJ/SV NAACP's complaints.

I am again filing this written complaint with the hope that the Board Ethics and Conduct Ad Hoc Committee will impartially, fully, and fairly investigate and provide findings to the Board, in addition to ensuring that the Oppenheimer investigation is re-conducted and/or evaluated by another independent firm with instructions to look at our actual complaint versus trying to incorrectly investigate things which do not lead toward evaluating the true nature of our complaint.

In Community Spirit,

Rev. Jethroe Moore II

Website: http://www.sanjosenaacp.org **Email: sjnaacp@sanjosenaacp.org**

CONFIDENTIAL SETTLEMENT AGREEMENT AND GENERAL RELEASE

THIS CONFIDENTIAL SETTLEMENT AGREEMENT AND GENERAL RELEASE (hereafter, "Release" or "Agreement") of all claims against former Director Joe Judge ("Judge") and the Santa Clara Valley Water District (which includes without limitation, District's Board of Directors, departments, committees, predecessors, successors, subsidiaries, related entities, past and present directors, employees and managers, independent contractors, managers, attorneys, agents and assigns) (collectively, "the District") is made by and between the District and Enrico Callender).

RECITALS

WHEREAS, Callender is currently employed by the District as its Government Relations Manager; and

WHEREAS, in April 2011, Callender filed a discrimination complaint against the District (Case #201011G0697-00-ev) and Judge (Case #201011G0697-01-ev) with the California Department of Fair Employment and Housing ("DFEH"), which were closed by the DFEH on January 23, 2012, re-opened by the DFEH, and re-closed by the DFEH on March 30, 2012; and

WHEREAS, this discrimination complaint was jointly filed with the U.S. Equal Employment Opportunity Commission on or about the same day, and has since been closed by that agency; and

WHEREAS, Callender made a written combined settlement offer for the case against the District and Mr. Joe Judge. on June 15, 2012 presenting eleven (11) terms of settlement.

WHEREAS, on or about December 4, 2012, Callender filed a new complaint against the District with the DFEH (DFEH Inquiry Number 55011-26161) alleging age, color, race, and sex discrimination, harassment, and retaliation; and

WHEREAS, as set forth herein, the parties now desire to enter into this settlement agreement which is intended to resolve, fully and forever, any and all actual and potential grievances, charges, disputes, controversies, claims, actions and lawsuits between them in order to avoid the uncertainties of litigation and the expense and costs incident thereto:

NOW, THEREFORE, THE PARTIES AGREE AS FOLLOWS:

1. General Release

(a) In consideration for the payment of twenty-seven thousand five hundred dollars ($27,500.00) and the change of Callender's job title from Unclassified Manager to Deputy Administrative Officer, Callender waives and releases any and all claims he has or might have against the District and Judge. The released claims include, but are not limited to, claims for discrimination, harassment, and retaliation arising under federal, state, and local statutory or common law, such as Title VII of the Civil Rights Act, the Americans with Disabilities Act, the Age Discrimination in Employment Act ("ADEA"), the Fair Employment and Housing Act, and the Unruh Civil Rights Act. This general release includes any and all liabilities, claims, demands, contracts, debts, obligations and causes of action of every nature, kind and description, in law, equity, or otherwise, whether or not now known or ascertained, which heretofore do or may exist, and including any matter, cause or thing arising out of, relating to, or connected with Callender's employment with the District prior to the execution of this Agreement. It is

understood and agreed that this payment shall not have any impact on, and shall not count towards, Callender's final salary at the District for purposes of retirement or any other employment or retirement benefits. The change of Callender's job title shall take effect on a date to be established by District which shall be no later than July 1, 2013. This change in title shall not include any increase in salary or benefits. The monetary payment is for Callender's alleged emotional distress relating to the complaints described herein.

(b) Callender understands and acknowledges that he has 21 days from the initial presentation of this Agreement to consider his release of claims under the ADEA, and if he executes this Agreement within that 21-day period he has done so by expressly waiving this 21-day notice provision. Callender acknowledges that he then has 7 days from the date he executes this Agreement to revoke his release of the ADEA claims. If Callender desires to revoke this release within the 7-day period after delivering the executed Agreement to the District, he must do so in writing delivered to the District Counsel, in which case his eligibility for the settlement payment set forth in paragraph 1(a) above is terminated. Callender is advised that he should consult an attorney prior to executing this Agreement.

(c) Concurrent with his execution of the Agreement, Callender shall execute and file a "Confirmation of Resolution by the Parties" with the DFEH (DFEH-200-10) and take whatever other steps are necessary to close his pending complaint with the DFEH and any matter pending before the EEOC.

2. Time for Payment of Settlement. No later than fifteen (15) business days after *both* the closure of his case by the DFEH and execution of this Agreement by

Callender, the District will make the payment described in paragraph 1(a) of this Agreement so long as Callender has not revoked the release within the 7-day period after delivering the executed Agreement to the District.

3. Waiver of Rights under Civil Code Section 1542. Callender understands and expressly agrees that this Agreement extends to all claims of every nature and kind, known or unknown, suspected or unsuspected, past, present or future, arising from or attributable to his employment with the District prior to the execution of this Agreement. Callender acknowledges that any and all rights granted him under Section 1542 of the California Civil Code or any analogous state or federal law or regulation, are hereby expressly waived. Callender recognizes and acknowledges that factors which have induced him to enter into this Agreement might turn out to be incorrect or different from what he had previously anticipated, and Callender expressly assumes all of the risks of this waiver of California Civil Code Section 1542. Said Section 1542 of the California Civil Code, reads as follows:

> A general release does not extend to claims which the creditor does not know or suspect to exist in his or her favor at the time of executing the release, which if known by him or her must have materially affected his settlement with the debtor.

4. Confidentiality. Except as may be required by statutory or regulatory requirements (including the California Public Records Act) or by legal process, neither party will disclose to others the terms of this Agreement, the amounts referred to in this Agreement, or the fact of the payment of said amounts. However, Callender may make

such disclosures to his attorneys, accountants or other professional service advisors as necessary to effectuate the purposes for which he consulted with such professional advisors. This paragraph is a material term, and Callender agrees that the District may take action in any court of competent jurisdiction to enforce this term, including forfeiture of amounts paid under this Agreement.

5. No Workers' Compensation Claim. Callender unequivocally affirms that he does not have a compensable workers' compensation injury of any kind, and that he has no intention of filing for workers' compensation benefits with respect to his employment at the District. If he does apply for workers' compensation – contrary to the intention of the parties -- the parties agree that a compromise and release will be entered into based solely on the consideration in this settlement, and that such claim should be summarily dismissed in the District's favor.

6. Severability. In the event that any term, condition or provision of this Agreement is held by a court of competent jurisdiction to be invalid or against public policy, that term, condition or provision will be deemed to be deleted, and the remaining terms, conditions and provisions will continue in full force and effect.

7. Choice of Law and Venue. The validity, interpretation and performance of this Agreement will be construed and interpreted according to the laws of the State of California. Any legal proceeding relating to this Agreement will be instituted in a court in Santa Clara County.

8. Authority to Make Agreement. Callender represents and warrants that he has full power to make the releases and agreements contained herein, and that he has not assigned, encumbered or in any manner transferred all or any portion of the claims

covered by the releases and agreements contained herein. Callender acknowledges that this warranty and representation is an essential and material term of the Agreement. Callender will indemnify the District for any claims brought by purported assignees of Callender, including costs of judgment and reasonable attorneys' fees.

9. Entire Agreement. The parties acknowledge that this Agreement constitutes the sole and entire agreement of the parties in this matter, that any modifications may only be made by a writing signed by both parties, and that this Agreement supersedes any prior written or oral agreement concerning the subject matter of its provisions. The parties agree that there are no representations, agreements, arrangements or understandings, either written or oral, between or among the parties relating to the subject matter of this Agreement which are not fully expressed herein.

10. Other Terms.

(a) Each party has had the opportunity to participate in drafting the Agreement. The terms, conditions and provisions of the Agreement will not be construed against one party and in favor of another by virtue of who actually drafted or circulated the Agreement.

(b) The parties will each execute all documents and perform all acts necessary to effectuate the terms and purposes of this Agreement.

(c) The Agreement may be executed in counterparts, with the same force and effect as if executed in a single, complete document.

11. In further consideration of the foregoing, Callender agrees, acknowledges and recognizes that this Agreement is a "no fault" settlement in light of disputed claims,

and that nothing contained in this Agreement shall constitute or be treated as an admission of liability or wrongdoing by the Judge or the District (or any of the District's employees or officers).

DATED: 1/20/2013

Enrico Callender
(Notarization Required)

DATED: 2/1/13

Beau Goldie, CEO
Santa Clara Valley Water District

APPROVED AS TO FORM:

Dated: 1/23/2013

Stanly Yamamoto
District Counsel
Santa Clara Valley Water District

CERTIFICATE OF ACKNOWLEDGMENT OF NOTARY PUBLIC

STATE OF CALIFORNIA)
COUNTY OF Santa Clara)

On January 20 2013 before me, the undersigned notary public, personally appeared Enrico Lifdell Callender,

who proved to me on the basis of satisfactory evidence to be the person(s) whose name(s) is/are subscribed to the within instrument and acknowledged to me that he/she/they executed the same in his/her/their authorized capacity(ies), and that by his/her/their signature(s) on the instrument the person(s), or the entity upon behalf of which the person(s) acted, executed the instrument.

I certify under PENALTY OF PERJURY under the laws of the State of California that the foregoing paragraph is true and correct.

WITNESS my hand and official seal.

Signature _____ (Seal)

NORMA J. CALLENDER
Commission # 1861246
Notary Public - California
Santa Clara County
My Comm. Expires Aug 15, 2013

STATE OF CALIFORNIA | State and Consumer Services Agency
GOVERNOR EDMUND G. BROWN JR.
DIRECTOR PHYLLIS W. CHENG

DEPARTMENT OF FAIR EMPLOYMENT & HOUSING
(800) 884-1684 | Videophone for the DEAF (916) 226-5285
www.dfeh.ca.gov | email: contact.center@dfeh.ca.gov

March 30, 2012

Enrico L. Callender
[redacted]
San Jose, Ca 95111

RE: E201011G0697-00-ev EEOC #: 37AB105266
Callender/Santa Clara Valley Water District

Dear Mr. Callender,

This letter is to advise you of the status of the Department's investigative findings following your appeal and the reopening of your case on February 22, 2012.

In order for the Department to file and investigate complaints alleging a violation of the Fair Employment and Housing Act (FEHA), the Department must have jurisdiction. If the numerous required jurisdictional elements applicable to a given case are all present, the Department will have the legal authority to proceed. However, if one required element is lacking, the Department will not have jurisdiction and will lose authority to act on a complaint.

In your Complaint of Discrimination you allege you were harassed by Director Joe Judge on the basis of your race (African-American) from 2000 to the filing of your DFEH complaint on April 20, 2011. The alleged harassment included comments by Director Judge directly related to your race and harassing behavior you believe occurred because of your race.

The FEHA states that for the DFEH to have jurisdiction the acts of harm identified in the complaint must have occurred **within one year** of the date the complaint was filed. The DFEH must also prove, by a preponderance of evidence, that you were 1) subjected to racial slurs, 2) the racially derogatory acts were **severe** in intensity **or pervasive** over time, 3) the harassment created a hostile and offensive work environment and 4) the Respondent is liable for the discrimination. The Department must also prove the harassing behavior, summarized in your chronology, occurred **because** of your protected basis.

In your complaint you allege you were harassed and subjected to a hostile and offensive work environment in that colleagues reported to you that Director Judge had made racially derogatory comments about you and others.

Callender

Summarized below are the race based comments reported to you by colleagues and the Department's findings with respect to each allegation:

- On 2/05/11 Roderick Jefferson allegedly informed you he had attended a meeting where Director Judge referred to George Bush as a "man" and Barak Obama as a "boy."

  Finding: This incident was confirmed as having occurred several years ago; although it was not communicated to you until 2011.

- In 2010, Director Judge (in discussing the departure of Ed Willis form the district) allegedly stated "I would never support him because he wants to be King."

  Finding: Ed Willis (African-American) left the district years before you were told about the comment. The general tone of the comment was confirmed, though not the specific words.

- On 8/31/10 former Director Cy Mann informed you Joe Judge had referred to you as an "uppity nigger" and stated you "always call that boy Jeff in to frazzle him." (Jethro Moore is President of the local NAACP Chapter.)

  Finding: Comment confirmed. Although the timeframe for the actual comment was unclear it appears to have been made some time after April 2010.

The following comments were also substatiated but occurred more than one year before the filing of your DFEH complaint; sometime between May, 2006 and May 29, 2009:

- On 5/29/09 you allege Joe Judge engaged in a "tirade where he attacks me and my reputation" in which he refers to you as thinking you are **"king of the Blacks"** and states you think the NAACP controls everythng; that you know powerful Blacks and are untouchable.

  Finding: Evidence is mixed but one witness did confirm words to this effect by Joe Judge.

- In September 2008, in conversation with District staff members, Judge allegedly stated he needed to speak with you about a project. When corrected by staff asking "Don't you mean Chris Elias?" Judge responded, "**Oh yeah, the other one**."

  Finding: One witness did confirm this comment.

- In May, 2006 you stated you overheard Judge screaming at Stan Williams, "You need to fire Rick now. I don't want **that boy** around here, don't you understand me!"

  Finding: Evidence did NOT confirm the specific wording but did support Judge had expressed a desire to have you fired on more than one occasion during a prior administration.

Callender

In addition to the above allegations, you assert Director Joe Judge subjected you to many other harassing actions because of your race. Summarized below are the harassing incidents alleged and the Department's findings with respect to each allegation:

- On 10/20/11 District employee Melanie Richardson informed you Director Judge gave her a copy of a dismissed, court case in which you were named as the defendant. You stated you believed Judge was contacting potential witnesses to discredit you as part of the District's investigation of your discrimination complaint.

  Finding: The incident was confirmed, however it was not clear it occurred at the time of the District's investigation. Additionally, no other witnesses interviewed confirmed being contacted by Judge regarding your court case. (Note: Melanie Richardson was not interviewed during the District/Respondent's investigation.)

- On 3/20/11 Ray Yep is told by Beau Goldie to retire or be fired. (Yep's race: Asian)

  Finding: No determination was made; the allegations are unrelated to Joe Judge, the alleged harasser.

- On 3/18/11 Director Joe Judge allegedly "attacks" Consultant Doug Johnson's application to the district for consultant services. (Johnson's race: Caucasian)

  Finding: Evidence confirmed Judge opposed the hiring of Johnson because of his previous redistricting work for the district which resulted in criticism of the Board of Directors of which Judge was an (elected) member.

- On 3/21/11 you informed Director Estremera you filed a complaint with DFEH and the District had taken no action since your initial interview in February, 2011.

  Finding: The following actions were found to have been taken by the District, in the investigation of your December, 2010 discrimination complaint:

  - Board refers your complaint to the District in late January, 2011;
  - Initial interview conducted with you regarding your allegations in February, 2010;
  - Interviews commence 4/06/11 by outside counsel;
  - Investigation findings submitted on August 31, 2011.

- In March, 2010 you advised your supervisor, CEO Beau Goldie the District was attempting to get rid of you by suggesting your responsibilities be assigned other staff and that he (Goldie) was dismantling your position by reassigning your duties to other managers.

  Finding: Evidence confirms you discussed above concerns with Goldie but retained your position as Government Relations Manager with no evidence of involvement by Director Judge.

- In January, 2011 you allege Trish Mulvey (a local resident, not an employee) had informed you she was present at meetings where Judge had made (non-specified) comments about you and the

Callender

NAACP

Finding: There was no evidence to support the allegation.

- On 12/14/10 you allege Joe Judge attacked your "character and veracity" by suggesting you could not do your job due to a "conflict of interest."

  Finding: The incident was confirmed in review of video tapped meeting. However, witness testimony is mixed as to whether the criticisms of you were race related.

- On 11/22/10 Director Judge reportedly expressed the belief you would be leaving the district as a result of your educational endeavors; law school.

  Finding: Comment **confirmed**. Witnesses did not perceive the comment, however, as occurring because of your race. Some witnesses stated they too had made the same assumption (that you would be leaving) until they learned otherwise.

- On 10/13/10 the job announcement for the "Senior Communications" (Communications and Public Relations Manager) position is amended to include one of your duties.

  Finding: Confirmed. However, witnesses reported it is within the prerogative of the CEO to reassign duties and state there is potential overlapping within unclassified positions and especially between the Public Relations and Government Relations positions. No causal connection established to link race to the incident.

- On 10/13/10 CEO Beau Goldie suggests you would be leaving the district when you complete your schooling; law school.

  Finding: Goldie stated he could not remember if he had assumed or indicated you would be leaving your positoin. However, he did recall discussing with you the possibility of moving into another position (in the District) in their legal department.

- On 10/06/10 you allege Judge attempted to influence the Request for Proposal (RFP) process and avert AB466 by attempting to influence the hirinig of a personal friend, Mia O'Connell.

  Finding: The DFEH has no jurisdiction to enforce or investigate violations of AB466. The allegation that an elected official (Director Judge) was attempting to influence the hiring a personal friend would appear to be politically motivated and unrelated to a violation of the F.E.H.A.

- Between 7/2010 and 11/2010 you allege former EEO officer (Debra Dake) was "instructed" to find a way to "get rid of you" but was ultimately removed from her position "due to hostile and prejudicial actions towards African-Americans."

  Finding: Evidence does not indicate that EEO officer Dake was "instructed" to get rid of you. However, evidence confirms she was removed from her position for engaging in unnecessary investigations, outside the scope of the EEO office and for drawing conclusions unsupported by

facts regarding you and other (non-African-American) employees. (*These investigations included employees of various races; complaints.)

- In 2008, you assert two board members approached Judge about what they perceived as personal attacks against you. He allegedly responded he was actually upset with Tommy Fulcher (your and Judge's prior employer), not you.

- **Finding:** Although you believed Judge's comment was race-related because Fulcher is also African-American there was no evidence to support the allegation. Evidence appears to support, however, an animosity between Judge and Fulcher.

- On 10/23/07, after approving the counsultant contract for Mia O'Connell Judge allegedly turns off the microphone and tells you "Don't forget Zoe likes Mia" implying that Mia should be hired by the district.

  Finding: Evidence does not suggest this incident occurred because of your race. The implication that policitcal pressure was being applied by Judge to hire Mia, in this instance, would not be in violation of F.E.H.A.

- In May 2007 Director Judge allegedly threatens your job and the prior CEO, Stan Williams for hiring Susan Siravo (Caucasian). Judge alleged states "if you ever cross Zoe Lofgren again by not hiring who she wants, I'll have your jobs."

  Finding: Evidence confirmed above incident; however, there appears to be no casual connection between the threat and your race in violation of the F.E.H.A.

SUMMARY OF FINDINGS

The Department's investigation confirmed Director Joe Judge made several racially, harassing comments between 2006 and April, 20, 2011; the most egregious, single incident occurring between April and August, 2010. The Department was unable to prove, however, that the harassing comments confirmed were sufficiently severe or pervasive to establish a violation under the Fair Employment and Houisng Act.

In evaluating your remaining allegations of harassment, the Department must prove the (harassing) conduct occurred **because of** your race, African-American. In making this determination the Department analyzes the validity of the Respondent's (non-discriminatory) reasons for the conduct, their treatment of other employees and direct evidence. The Department's investigation did not substantiate that the harassing conduct was in violation of the statute. In inteview, several witnesses expressed the opinion that Judge's questioning of you in board meetings was unnecessarily critical and sometimes adversarial. However, witnesses were divided in their perceptions as to whether Judge's comments were personal attacks (unrelated to your race) or occurred because of your race. Witnesses (including some African-Americans) also testified no other employee of the District (African American or non-African American) was treated in a similar manner to you by Director Judge. Some witnesses perceived there had been long standing issues between you and Judge when you worked together for Fulcher that were unrelated to race. Finally, many of the harassing incidents alleged (summarized above) were either unsubstantiated or unrelated to you or your race.

Callender

Regrettably, the Department is unable to pursue your complaint for accusation as DFEH is unable to conclude a violation of the statute occurred.

In closing, please be advised that should you decide to pursue your complaint in court, you must do you must do so within one year as described in your Notice of Case Closure (RTS) which was issued on January 23, 2012. As discussed previously, the reopening of your case on February 22, 2012 did not extend the statute of limitations and any civil action, in violation of the FEHA, must be filed within one year of the Notice of Case Closure.

Sincerely,

Marlene Massetti by [illegible], Acting DA

Marlene Massetti
District Administrator
San Jose District Office, DFEH

Enclosure: Notice of Case Closure; dated January 23, 2012

[redacted]

ENRICO L CALLENDER, Plaintiff, vs. SANTA CLARA VALLEY WATER DISTRICT ET AL, Defendant	Case No.: ENRICO L CALLENDER V. SANTA CLARA VALLEY WATER DISTRICT ET AL.

COMPLAINT AND JURY DEMAND

Plaintiff, Enrico Callender Enrico Callender, by and through his undersigned counsel, [redacted] hereby complains against the Defendants, the Santa Clara Valley Water District, Director Joe Judge, Michael Baratz, Matthew Bruni, Jessica Collins, and Edward Yates.

STATEMENT OF CLAIM

This is an action to vindicate violations of the Plaintiff's civil rights and to redress the unlawful and discriminatory conduct and employment practices of the Defendants.

This action arises out of the illegal and wrongful harassment based on the plaintiff's race, age and subsequent retaliation. Mr. Callender was has been relentlessly harassed during the period of his employment based, in whole or in part, upon his gender, age and/or race in violation of Title VII of the Civil Rights Act of 1964, as amended, 42 U.S.C. Section(s) 2000e et seq., and the Civil Rights Act of 1866, as amended by the Civil Rights Restoration Act of 1991, 42 U.S.C. Section 1981 and 1983, 1st Amendment of the United States Constitution, and The California Fair Employment and Housing Act (Part 2.8 commencing with Section 12900 of Division 3 of Title 2 of the Government Code) and the Regulations of the Fair Employment and Housing

Commission (California Code of Regulations, Title 2, Division 4, Sections 7285.0 through 8504).

Beginning on or about March 20, 1996, Enrico Callender, an African-American male, was employed at the Santa Clara Valley Water District. During his more than 16 years with the Santa Clara Valley Water Disrtrict, Mr Callender performed his duties in a professional and outstanding manner.

In or around February 1998 Mr. Callender began to experience direct and personal attacks on his character and good name during the board meetings of the board of directors from Director Joe Judge in open session.

Mr. Judge verbally attacked Mr. Callender in public and intentionally questioned his credibility during taped sessions of the Santa Clara Valley Water District Board meetings. Director Judge then began to make numerous demands that then CEO Mr. Stan Williams immediately discharge Mr. Callender. These attacks and unfair demands for discharge were unwarranted and unexpected and went on for nearly a decade before Mr. Callender began to document the attacks.

In or around February 2008, the Santa Clara Valley Water District initiated an investigation into alleged sexual harassment and misconduct at its facility located in San Jose, CA, where Mr. Callender is employed. The investigation was the direct consequence of Mr. Joe Judge's ongoing attempts to force Mr. Callender to be removed from the employ of the organization. The allegations raised by Ms. Jessica Collins, a white female employee, who reported, under questionable circumstances, that she had been subjected to sexual harassment.

Mr. Callender vigorously denied the accusations, and subsequently in 2011 the DFEH found that the District was knowledgeable that their conclusions were not based on facts which they had in evidence.

Following both investigations, Mr. Judge went on a series of attacks directed towards Mr. Callender, referring to him as Nigger, attacking his association with the NAACP and acting in a harassing manner during open and public board meetings towards Mr. Callender.

In December 2010 Mr. Callender issued a complaint directly to the elected Board of Directors of the Santa Clara Valley Water District in an attempt to halt the ongoing harassment. A District' investigation revealed many of these claims to be accurate. Mr. Callender filed a complaint with the California Department of Fair Housing in March of 2011.

Following the complaint with the DFEH Mr. Judge began a retaliatory campaign to try to attack Mr. Callender's reputation by directly meeting with District managers, and others, and by making and handing out copies of a complaint against Mr. Callender which had been dismissed in the courts.

As a result of the Defendants' unlawful discriminatory, and retaliatory conduct and employment practices and violations of Plaintiff's rights protected by state and federal law, Mr. Callender was experienced severe emotional distress and a loss of income.

Plaintiff now seeks monetary damages, including back pay, front pay, if applicable, compensatory and punitive damages; and attorneys fees and costs, pursuant to Title VII of the Civil Rights Act of 1964, as amended, 42 U.S.C. Sections 2000e, et seq.; the Civil Rights Act of 1866, as amended, 42 U.S.C. Section 1981 and 1983; 42 U.S.C. Section 1981 and 1983A and 42 U.S.C. Section 1988, and The California Fair Employment and Housing Act (Part 2.8 commencing with Section 12900 of Division 3 of Title 2 of the Government Code) and the Regulations of the Fair Employment and Housing Commission (California Code of Regulations, Title 2, Division 4, Sections 7285.0 through 8504).

Mr. Callender also brings tort claims under the common law of California.

PARTIES

Plaintiff, Enrico Callender, an African-American, is an adult male individual and citizen of the United States who resides at [redacted] San Jose, CA . Mr. Callender is 42 years old and was an employee of the Santa Clara Valley Water District, within the meaning of Title VII of the Civil Rights Act of 1964, as amended, 42 U.S.C. Sections 2000e, et seq., and The California Fair Employment and Housing Act (Part 2.8 commencing with Section 12900 of Division 3 of Title 2 of the Government Code) and the Regulations of the Fair Employment and Housing Commission (California Code of Regulations, Title 2, Division 4, Sections 7285.0 through 8504), and applicable case law.

Defendant, the Santa Clara Valley Water District [herein referred to as District], is a Public entity or similar business entity organized and existing under the laws of the State of California, and which regularly conducts business at the Santa Clara Valley Water District, San Jose, CA.

At all relevant times, Defendant District employed in excess of fifteen employees and was an employer within the meaning of Title VII of the Civil Rights Act of 1964, as amended, 42 U.S.C. Sections 2000e, et seq., and The California Fair Employment and Housing Act (Part 2.8 commencing with Section 12900 of Division 3 of Title 2 of the Government Code) and the Regulations of the Fair Employment and Housing Commission (California Code of Regulations, Title 2, Division 4, Sections 7285.0 through 8504).

Defendant, Joe Judge , a white male, is an adult individual and citizen of the United States who resides in California. At all relevant times, Mr. Judge was a employee of the District.

Defendant, Matt Bruni, a white male, is an adult individual and citizen of the United States who resides in California. Between approximately June 2002 and to January 2013, Mr. Bruni is an employee of the District.

Defendant, Michael Baratz, a white male, is an adult individual and citizen of the United States who resides in California. Between approximately June 2010 and January 2013, Mr. Baratz was an employee of the District.

Defendant, Ed Yates, a white male, is an adult individual and citizen of the United States who resides in California. Between approximately June 2011 and October 2012, Mr. Yates was an employee of the District.

Defendant Santa Clara Valley Water District is a local government and public agency in the State of California.

JURISDICTION AND VENUE

This is, in part, an action authorized and instituted pursuant to: Title VII of the Civil Rights Act of 1964, as amended, 42 U.S.C. Section(s) 2000e et seq., and the Civil Rights Act of 1866, as amended by the Civil Rights Restoration Act of 1991, 42 U.S.C. Section 1981 and 1983, and the California Fair Employment and Housing Act (Part 2.8 commencing with Section 12900 of Division 3 of Title 2 of the Government Code) and the Regulations of the Fair Employment and Housing Commission (California Code of Regulations, Title 2, Division 4, Sections 7285.0 through 8504), and the common law of the State of California.

The jurisdiction of this Court is predicated upon the law of the State of California, to redress the unlawful deprivation of Plaintiff's rights secured, guaranteed and protected by State and Federal law.

Venue is proper in the Santa Clara County Superior Court for the State of California pursuant to 410.10 of the code of Civil Procedure, wherein Plaintiff resides, all Defendants, regularly conduct business and where all the wrongful conduct occurred.

ADMINISTRATIVE PREREQUISITES

Mr. Callender has complied with all the administrative prerequisites to action under as follows:

On or about March 20, 2011, Mr. Callender timely filed a formal charge of discrimination with the California Department of Fair Employment and Housing under The California Fair Employment and Housing Act (Part 2.8 commencing with Section 12900 of Division 3 of Title 2 of the Government Code) and the Regulations of the Fair Employment and Housing Commission (California Code of Regulations, Title 2, Division 4, Sections 7285.0 through 8504) [hereinafter referred to as DFEH] which was jointly filed with the Equal Employment Opportunity Commission [hereinafter referred to as E.E.O.C.];

Mr. Callender promptly and diligently accommodated all DFEH and E.E.O.C. requests for information and fully cooperated in the agencys' investigation of this matter;

Mr. Callender has exhausted all available administrative remedies in accord with the aforementioned statutes prior to instituting this Civil Action, Mr. Callender was provided a right to sue on January 22, 2011.

FACTUAL ALLEGATIONS

Plaintiff, Enrico Callender, was employed by Defendant District on or about March 20, 1996 and worked at the District Headquarters located in San Jose, California.

At all relevant times, Defendant District employed in excess of fifteen (15) employees for at least twenty (20) calendar weeks in 1996 through 2013.

At all relevant times, all matters regarding compensation, terms, conditions, rights and privileges of Mr. Callender' employment were governed and controlled by Defendant District.

Upon information and belief and at all relevant times, Defendants Judge, Baratz, Bruni and Yates were acting as the Director’s, agents, servants and/or employees of Defendant District.

Defendant District is therefore liable for the acts, actions and omissions of the individual Defendants pursuant to the principals of ratification, respondeat superior and actual and/or implied agency.

At all relevant times, Mr. Callender fully, adequately and completely performed all of the functions, duties and responsibilities of his employment with Defendant District.

Until 2008 Mr. Callender has a history and record of regular salary increases and bonuses.

At all relevant times, Defendant Judge was a elected Director of Defendant District.

Defendant District had a policy regarding sexual and racial harassment in the workplace. Pursuant to the District Employment policies, the District's employees, agents, or contractors not discriminate, harass, or allow harassment against any applicant, employee, customer, or other person on the basis of sex, race, religion, color, national origin, ancestry, religious creed, political affiliation, mental or physical disability (including HIV or AIDS), medical condition (including cancer), genetic information, marital status, parental status, gender, age (over 40), pregnancy, special disabled veteran status, Vietnam Era Veteran and all other Veteran status, sexual orientation, gender expression, gender identity, the exercise of family and medical care leave, the exercise of pregnancy disability leave, or the request, exercise, or need for reasonable accommodation.

Upon information and belief and as set forth herein, Defendant District applied this policy in a manner that discriminated against Mr. Callender on the basis of age and/or race.

Director Judge initiated a series of public and private racially motivated attacks on Mr. Callender which began in 1996.

Director Judge's attacks were based on discriminatory intimidation, ridicule and insult and harassment.

Director Judge's verbal attacks included racial slurs directed toward Mr. Callender.

Director Judge's attacks included communicating disparaging information to third parties, whom he knew, or should have known would carry the information back to Mr. Callender.

Director Judge's verbal attacks included direct racial slurs and other slurs which could be determined through innuendo, all of which were directed at Mr. Callender.

Director Judge's verbal attacks were severe and pervasive over a period of over one decade and intensified between 2006 and 2011.

Director Judge's attacks were continuous and steady over more than a decade.

The District, its employees, and agents were aware of Director Judge's racial animus towards Mr. Callender.

Director Judge's confirmed to others that he was angry with another African American, but was directing his anger towards Mr. Callender.

As a result of the attack on Mr. Callender it created a hostile work environment for Mr. Callender where he felt that his only option might be to leave his employment, rather than continue to be subjected to unfair and disparate treatment.

Director Judge on multiple occasions between 1996 through 2009 demanded that multiple acting and actual CEO's discharge Mr. Callender of his duties as an employee. Upon information and belief, these calls for discharge were based on racial animus.

Upon information and belief, in 2008 the District its employees, agents and contractors conspired to initiate a District-wide investigation into Mr. Callender based on allegations of sexual harassment and misconduct, in an attempt to manufacture a basis for discharge.

Ms. Jessica Collins at the encouragement of District agents initiated the complaint against Mr. Callender.

Upon information and belief, Ms. Collins accusations were not creditable, and she only reported the alleged sexual harassment after she was implicated in a violation of company policy.

At all relevant times, Mr. Callender vehemently denied all allegations of misconduct.

The District conducted the aforesaid investigation in such a manner so as to intimidate, harass, embarrass and coerce its employees into supporting the accusations.

Upon information and belief, as part of the aforesaid investigation, District, through its agents and employees, promised to reward employees and contractors for misrepresentation of fact and retaliated against employees who did not cooperate with the misrepresentation of fact.

The District knew or should have known that the investigation against Mr. Callender were false and motivated by self-interest, and tied to Director Judge and the attempt to discharge Mr. Callender.

In spite of said knowledge, District acted on its investigative findings by reducing Mr. Callender's pay and removing his then title.

Director Judge's verbal attacks on Mr. Callender included calling Mr. Callender racial derogatory names.

Mr. Judge openly and continuously attacked Mr. Callender for his involvement and association with the NAACP.

The District, its employees and agents were aware of Director Judge calling Mr. Callender racially derogatory names.

Upon information and belief between 2009 and 2010 the District attempted to initiate at least four subsequent investigations through its Equal Employment Office into Mr. Callender, in an attempt to further manufacture a basis for discharge of Mr. Callender.

Upon information and belief, after Mr. Callender filed complaints directed toward at the ongoing discriminatory actions of the District and Director Judge, Director Judge began to circulate a dismissed court complaint, which had been discharged by the Santa Clara County Superior Court in a attempt to attack Mr. Callender's character and veracity and to influence the internal District investigation on his action and role.

In December 2011 Mr. Bruni, the District's HVAC technician, engaged in a unprovoked written online attack against Mr. Callender and two other African American senior managers in an attempt to attack their character and veracity. Upon information and belief this was done during and while in the employ of the District.

Mr. Bruni falsely accused Mr. Callender of sexually harassing several women and the District, causing the District to have to financially settle.

In 2012 Mr. Baratz, the District's acting Human Resources Director, engaged in a series of unprovoked verbal attacks in open District forums against Mr. Callender, in an attempt to attack his character and veracity.

Upon information and belief, Mr. Baratz publicly and falsely stated that Mr. Callender engaged in sexually harassing behaviors and would have to be "forced out" of the District, because he would not leave on his own volition.

In 2012 Mr. Yates, Senior District Counsel, engaged in a unprovoked attack against Mr. Callender, encouraging other members of senior management to refuse to works with Mr. Callender.

Upon information and belief, Mr. Yates publicly and falsely stated that Mr. Callender had been accused and convicted of corruption.

In fact, there is evidence that Defendant Callender was subjected to disparate treatment for over a decade through the behaviors and actions of Director Judge.

In fact, there is evidence which demonstrates that the District had knowledge that its conclusions of its prior referenced investigation was not based on the facts.

In fact, there is evidence of the racially derogatory terms being spoken about Mr. Callender on multiple occasions by agents, employees or contractors of the District.

In fact, District knew or should have known that Ms. Jessica Collins did have something to gain from pursuing allegations against Mr. Callender because prior to her allegations of sexual harassment , Defendant Collins was personally implicated in violations of District company policy.

In fact, the District used the investigation and complaint process as a tool for har

Contrary to its express employment policies, the District did not halt the harassment, and allowed for other employees and agents of the District to retaliate .

CAUSES OF ACTION

FIRST CAUSE OF ACTION

Hostile Work Environment Gov. Code, § 12940(j)

All Defendants

Defendant District' Violation of Title VII's Prohibition Against Employment Discrimination, and the California Fair Employment and Housing Act against Racial Discrimination -- Disparate Impact

Plaintiff incorporates by reference the allegations set forth in the preceding paragraphs of the Complaint as though set forth at length herein.

This claim is authorized and instituted pursuant to the provisions of Title VII of the Civil Rights Act of 1964, 42 U.S.C. Section(s) 2000e et seq., as amended, and 42 U.S.C. Section 1981 and 1983, and The California Fair Employment and Housing Act (Part 2.8 commencing with Section 12900 of Division 3 of Title 2 of the Government Code) and the Regulations of the Fair Employment and

Housing Commission (California Code of Regulations, Title 2, Division 4, Sections 7285.0 through 8504), for relief based upon the unlawful employment practices of the above-named Defendant. Specifically, Mr. Callender complains of Defendant District' violation of Title VII's prohibition against discrimination in employment based, in whole or in part, upon an employee's race.

Mr. Callender is an African-American male and during his employment with Defendant District was a member of a class protected under Title VII against race based discrimination by his employer, Defendant District, or its supervisory personnel. At all relevant times, Mr. Callender fully, adequately and completely performed all of the functions, duties and responsibilities of his employment with Defendant District.

At all relevant times, Defendant District operated under a harassment policy which was intended to prevent disparate treatment based on race and other factors.

Director Judge through his numerous public statements about Mr. Callender being, “King of the Blacks,” referring to Mr. Callender as a Nigger, and statements about Mr. Callender’s role in, and association with the NAACP sought to create an atmosphere that a reasonable African American would find to the work atmosphere to be hostile and abusive.

As a result of Defendant District' policies and practices, Mr. Callender was unjustly and discriminatorily deprived of equal employment opportunities because of his race.

As a further result of Defendant District' above stated actions, Mr. Callender has been, is being and will be deprived of income in the form of wages and prospective retirement benefits, but denied because of his race and in an amount to be proven at trial.

SECOND CAUSE OF ACTION

Disparate Treatment (Gov. Code, § 12940(a))

All Defendants

Defendant District' Violation of Title VII's Prohibition Against Employment Discrimination, and the California Fair Employment and Housing Act against Racial Discrimination -- Disparate Impact

Plaintiff incorporates by reference the allegations set forth in the preceding paragraphs of the Complaint as though set forth at length herein.

This claim is authorized and instituted pursuant to the provisions of Title VII of the Civil Rights Act of 1964, 42 U.S.C. Section(s) 2000e et seq., as amended, and 42 U.S.C. Section 1981 and 1983, and The California Fair Employment and Housing Act (Part 2.8 commencing with Section 12900 of Division 3 of Title 2 of the Government Code) and the Regulations of the Fair Employment and Housing Commission (California Code of Regulations, Title 2, Division 4, Sections 7285.0 through 8504), for relief based upon the unlawful employment practices of the above-named Defendant. Specifically, Mr. Callender complains of Defendant District' violation of Title VII's prohibition against discrimination in employment based, in whole or in part, upon an employee's race.

Mr. Callender is an African-American male and during his employment with Defendant District was a member of a class protected under Title VII against race based discrimination by his employer, Defendant District, or its supervisory personnel. At all relevant times, Mr. Callender fully, adequately and completely performed all of the functions, duties and responsibilities of his employment with Defendant District.

At all relevant times, Defendant District operated under a harassment policy which was intended to prevent disparate treatment based on race and other factors.

Defendant District upon learning that their prior mentioned investigation .

On information and belief, As set forth herein, as a result of the investigation out of which the allegations against Mr. Callender arose, Defendant District did not attempt to correct any erroneous findings which arose as a result of their investigation.

On information and belief, Defendant District disciplinary and release process is applied in a disparate manner toward minority at-will employees in general, and African-American employees in particular, at a substantially higher rate than white employees and therefore has a significant discriminatory impact on minority employees.

On information and belief Defendant District allowed Mr. Judge to continuously to treat Mr. Callender in an abusive and harassing fashion, whereas when another minority Director was reprimanded for his abusive behavior toward white employees and instructions were given that the minority Director could only communicate with the CEO.

As a result of Defendant District' policies and practices, Mr. Callender was unjustly and discriminatorily deprived of equal employment opportunities because of his race.

As a further result of Defendant District' above stated actions, Mr. Callender has been, is being and will be deprived of income in the form of wages and prospective retirement benefits, but denied because of his race and in an amount to be proven at trial.

THIRD CAUSE OF ACTION

Defendant District' Breach of Contract and/or Promissory Estoppel

Plaintiff incorporates by reference the allegations set forth in the preceding paragraphs of the Complaint as though set forth at length herein.

Defendant District promulgated express and written statements of employment policies, practices and procedure which it provided and disseminated to all of its employees, including Mr. Callender.

Defendant District represented, both orally and in writing, that it would treat employees in a specific, fair and equitable manner.

The customary pattern and practice of Defendant District was to follow its express and implied employment policies and practices, including for at will employees.

Defendant District promulgated these policies and procedures, and made these representations, in such a manner as to manifest its willingness to enter into a bargain with its employees, including Mr. Callender.

Mr. Callender assented to Defendant District' offer regarding the employment policies and procedures by accepting employment and via oral representations in such a way as to conclude the bargain.

Mr. Callender' initial and/or continued employment with Defendant District constituted acceptance of and consideration for Defendant's offer.

Defendant District breached its contract with Mr. Callender by its failure to follow its own practices, policies and procedures with regard to the terms and conditions of Plaintiff's employment as set forth herein.

As set forth herein, Defendant District intentionally, willfully and/or maliciously breached its contract with Plaintiff.

Moreover, Defendant District expected and/or should have reasonably expected Mr. Callender to rely on the aforementioned policies and procedures as a commitment by Defendant District to follow and abide by them.

At all relevant times, Mr. Callender understood and reasonably relied on the aforementioned policies and procedures to his detriment and harm, both pecuniary and otherwise.

As set forth herein, Defendant District manipulated and did not follow the aforementioned employment practices, policies and procedures. Specifically, Mr. Callender was subjected to adverse employment actions for cause in that Defendant District did not properly determine whether or not there was cause.

Substantial injustice can only be avoided by enforcing the promises made by Defendant District to Mr. Callender.

Defendant District' breach of contract was a direct and proximate cause of the injuries, damages and harm suffered by Mr. Callender and as set forth herein.

Defendant District' conduct was willful and wanton, and Mr. Callender is entitled to punitive/exemplary damages in addition to compensatory damages and other remedies available under the common law.

FOURTH CAUSE OF ACTION

All Defendants -Negligence

Plaintiff incorporates by reference the allegations set forth in the preceding paragraphs of the Complaint as though set forth at length herein.

Defendant District owed and continues to owe a duty of care to third parties, and more particularly to their employees such as Mr. Callender, to prevent their employees from acting in any way to harm co-employees.

Defendant District had a duty to prevent pervasive harassment by Directors and employees.

Defendant District had a further duty to ensure that complaints of sexual harassment and sexual misconduct were properly handled and the investigation conducted in a fair, impartial and/or non-discriminatory manner.

Defendant District voluntarily contracted, promised and/or agreed and thereby assumed a legal duty to ensure that complaints of sexual harassment and sexual misconduct were properly handled and the investigation conducted in a fair, impartial and/or non-discriminatory manner, pursuant to its express employment policies.

Defendant District breached its duty of care owed to Mr. Callender by and through the following acts and/or omissions, which include but are not limited to:

A. Failing to properly and adequately train its managerial, including Mr. Baratz, employees on the release of private information.

B. Failing to properly and adequately train its managerial employee and directors, including Defendant Judge, to prohibit discriminatory employment practices, including discrimination based on race, and/or age;

C. Failing to carefully and diligently supervise its employees to prevent them from improperly handling complaints of sexual harassment and/or conducting the investigation in a non-discriminatory manner;

D. Failing to implement and/or take appropriate remedial action once it knew or should have known that its employees were mishandling complaints of sexual harassment and/or conducting the investigation in a discriminatory manner; and

E. Failing to conduct a reasonable, proper and appropriate investigation.

F. Failing to abide by its own express and implied employment policies and procedures;

G. Failing to exercise reasonable care under the circumstances.

H. Failing to train its employees to prevent libel, slander and false light, relative to the workplace.

The above-named Defendants conduct was a direct and proximate cause of the injuries, damages and harm suffered by Plaintiff Callender.

Because the Defendants' conduct toward Mr. Callender was improperly motivated, and was intentional, willful and wanton, Mr. Callender is entitled to punitive exemplary damages in addition to compensatory damages.

FIFTH CAUSE OF ACTION

All Defendants - Intentional Infliction of Emotional Distress

Plaintiff incorporates by reference the allegations set forth in the preceding paragraphs of the Complaint as though set forth at length herein.

As set forth herein, during his employment with Defendant District, Mr. Callender was subjected to a pattern of discrimination and misconduct in the workplace based, in whole or in part, on his age, and/or race.

At all relevant times, the above-named Defendants knew or should have known that their statements referring to the Plaintiff as a Nigger, King of the Blacks, and other racially charged statements were unwelcome.

At all relevant times, the above-named Defendants knew or should have known that Ms. Collin's accusations against Mr. Callender were false. Despite said knowledge, Defendants ignored the evidence and attempted to coerce and intimidate other employees into implicating Mr. Callender in wrong-doing.

Despite actual and/or constructive knowledge that the accusations were unfounded, Mr. Callender was written-up and disciplined for alleged infractions of company policy. Moreover, the above-named Defendants have communicated to third parties, including the non involved and non concerned employees, that Mr. Callender was guilty of sexual misconduct, despite actual and/or constructive knowledge that these accusations were false.

The above-named Defendants, by branding Mr. Callender a sexual harasser and disciplining him for alleged infractions of company policy acted intentionally, recklessly and/or with deliberate indifference to a substantial probability that severe emotional distress would result to Mr. Callender.

The above-named Defendants' actions towards Mr. Callender as set forth above, are evidence of a pattern of age discrimination and/or race discrimination which further constitutes extreme and outrageous conduct.

The conduct of the above-named Defendants was outrageous in character and extreme in degree, because said conduct was atrocious and egregious, and went beyond all possible bounds of decency and is utterly intolerable in a civilized community.

The extreme and outrageous conduct of the above-named Defendants toward Mr. Callender was done in a willful and wanton manner, and constituted a disregard for the rights and well-being of Mr. Callender.

As a direct and proximate result of the above-named Defendants' extreme and outrageous conduct, Mr. Callender suffered severe emotional distress.

Because the Defendants' extreme and outrageous conduct toward Mr. Callender was improperly motivated, and was intentional, willful and wanton, Mr. Callender is entitled to punitive/exemplary damages in addition to compensatory damages.

SIXTH CAUSE OF ACTION

Defendant District and Judge-Freedom of Association

Mr. Callender was actively affiliated with the National Association for the Advancement of Colored People, holding titles such as President of the San Jose, Silicon Valley Branch. Mr. Callender has been actively and publicly affiliated with the organization since approximately the year 2000.

Defendant Judge actively engaged in remarks which were overheard by many in meetings of the

Santa Clara Valley Water District that they would take the Rick out from being “king of the Blacks” and he had too much power as NAACP President.

SEVENTH CAUSE OF ACTION

All Defendants - Defamation

Plaintiff incorporates by reference the allegations set forth in the preceding paragraphs of the Complaint as though set forth at length herein.

Upon information and belief, Defendant's Judge, Baratz, Bruni, Collins and Yates have repeated false and untrue allegations on numerous occasions to a variety of individuals, including but not limited to, District Employees and to others not presently known to Plaintiff.

At all relevant times all defendants knew, or should have known that their statements and allegations of sexual misconduct by Mr. Callender were false, and/or made with reckless disregard as to whether the statements were false or not.

At all relevant times all defendants knew or should have known that their statements and allegations of corruptions were false, and/or made with reckless disregard as to whether the statements were false or not.

As set forth herein, Mr. Callender never sexually harassed Ms. Collins, and has steadfastly denied all allegations of sexual harassment and misconduct.

Mr. Callender has never been accused or convicted of corruption.

Upon information and belief, all defendants's false oral and written defamatory statements specifically pertained to Mr. Callender.

As set forth herein, Defendant Yates's false oral defamatory statements specifically alleged that Mr. Callender had perpetrated a crime, which constitutes libel and slander per se.

Defendants Judge, Bruni, Baratz and Yates defamatory oral and written statements were a direct and proximate cause of the injuries, damages and harm suffered by Mr. Callender.

Because the above-named Defendants' conduct towards Mr. Callender was improperly motivated, and was intentional, willful and wanton, Mr. Callender is entitled to punitive/exemplary damages in addition to compensatory damages.

The above-named Defendants' publication of a defamatory statement was a direct and proximate cause of the injuries, damages and harm suffered by Mr. Callender.

Because the Defendants' conduct towards Mr. Callender was improperly motivated, and was intentional, willful and wanton, Mr. Callender is entitled to punitive/exemplary damages in addition to compensatory damages.

EIGHTH CAUSE OF ACTION

All Defendants- False Light

Plaintiff incorporates by reference the allegations set forth in the preceding paragraphs of the Complaint as though set forth at length herein.

By publishing or causing to be published the false allegations described above all defendants have portrayed Plaintiff in a false light.

The false light created by the Defendant’s actions as alleged herin would be highly offensive to a reasonable person in the Plaintiff’s position.

The Defendants knew or should have knows that the publication alleged herin would create a false impression about Plaintiff or acted with reckless disregard for the truth.

The above-named Defendants' publication of a defamatory statement was a direct and proximate cause of the injuries, damages and harm suffered by Mr. Callender.

Because the Defendants' conduct towards Mr. Callender was improperly motivated, and was intentional, willful and wanton, Mr. Callender is entitled to punitive/exemplary damages in addition to compensatory damages.

ADDITIONAL PARTIES AND/OR CLAIMS

Mr. Callender respectfully requests leave to amend his Complaint to add additional parties and/or claims upon completing initial discovery. It may be necessary to name agents or employees of the above-named Defendants, and to add additional claims such as intentional discrimination based on race pursuant to Title VII of the Civil Rights Act of 1964, as amended, 42 U.S.C. Section 2000e et seq., and 42 U.S.C. Section 1981 and 1983; intentional discrimination based on age pursuant to the Age Discrimination in Employment Act, 29 U.S.C. Section 620 et seq, conspiracy, malicious prosecution and negligent hiring if additional investigation and discovery elicits information that supports such claims.

DAMAGES

The conduct of the above-named Defendants, as set forth herein, in violating Mr. Callender' rights under Title VII of the Civil Rights Act of 1964, as amended, 42 U.S.C. Section(s) 2000e et seq.; the Civil Rights Act of 1866, as amended by the Civil Rights Restoration Act of 1991, 42 U.S.C. Section 1981 and 1983; and the common law of California, caused injuries, damages and harm to Mr. Callender, including, but not limited to, past and future economic loss, past and future non-economic losses, including extreme emotional distress, loss of reputation, shame, humiliation, pain and suffering, inconvenience, mental anguish, impairment in the quality of life; and consequential losses.

WHEREFORE, Plaintiff Enrico Callender requests judgment and damages against Defendants, the Santa Clara Valley Water District, Director Joe Judge, Matt Bruni, Jessica Collins, Michael Baratz, and Edward Yates, jointly, severally and/or individually, as follows:

A. A declaratory judgment that Defendants have violated Mr. Callender' right to be free from discrimination in the workplace pursuant to the Title VII of the Civil Rights Act of 1964, as amended, 42 U.S.C. Sections 2000e, et seq.; the Civil Rights Act of 1866, as amended by the Civil Rights Restoration Act of 1991, 42 U.S.C. Section 1981 and 1983; 42 U.S.C. Section 1981 and 1983A;

B. Enter an injunction ordering Defendant District to make Plaintiff whole with full back pay, benefits and reinstatement to Mr. Callender's prior position, or in the alternative, front pay.

C. An award to Mr. Callender for compensatory damages in amount to be shown at trial for past and future economic and non-economic losses, including extreme emotional distress and mental anguish, impairment of the quality of life; and consequential loses;

D. An award to Mr. Callender for exemplary and/or punitive damages in an amount to be shown at trial;

E. Enter an injunction ordering Defendant District to remove all documents relative to the investigation which was intended to harass Mr. Callender, and its findings from Mr. Callender's personnel file.

F. An award to The Law Offices of [redacted] for reasonable attorneys' fees and costs, including but not limited to expert witness fees, as provided in Title VII of the Civil Rights Act of 1964, as amended, 42 U.S.C. Section 2000e-5(k), 42 U.S.C. Section 1981 and 1983A, 42 U.S.C Section 1988 and as provided under state law;

G. An award to Mr. Callender of interest on any awards at the highest rate allowed by law; and

H. Such other and further relief as this Court deems just and appropriate.

PLAINTIFF REQUESTS TRIAL TO A JURY ON ALL CLAIMS ALLOWED BY LAW

Dated this 9th of January, 2013

[redacted]

September 16, 2012

Mr. Stan Yamamoto Chief Legal Officer Santa Clara Valley Water District 5750 Almaden Expressway San Jose, CA 95118	***<u>**CONFIDENTIAL**</u>

Re: Third Confidential Offer of Settlement

Dear Mr. Yamamoto;

In response to your June 22, 2012 letter and our September 10, 2012 conversation in your office, I am clarifying the scope of my settlement offer and the linkage to your clients.

In your June 22, 2012 letter, you incorrectly point out that DFEH was unable to sustain any viable violation on the part of the District or Director Joe Judge. In order for DFEH to have jurisdiction, the acts of harm identified in the complaint must have occurred within one year of the filing of the complaint and the DFEH must prove by a preponderance of the evidence that the complaining party was subjected to racially derogatory acts which were severe in intensity or pervasive over time, that the harassment created a hostile and offensive work environment, and that the District is liable for the discrimination. DFEHalso must prove that the harassing behavior occurred because of my protected status. DFEH did, in fact, find many of these elements present, but questioned the pervasiveness of the obviously discriminatory behavior at the time of my complaint.

As you are aware, since my last complaint, there have been additional attacks from members of senior management, classified staff, and District consultants toward me and other African Americans at the District that demonstrate discrimination based on age, race, sex and retaliation as a result of my complaints against the District and Director Judge. For example. the acting manager of the Human Resources Unit opined publicly that I would have to be forced out of the District, among other discriminatory comments. In another incident, classified staff posted defamatory attacks about African American managers during work hours on Craigslist, only targeting myself, Sharon Judkins and Kay Norris. And in a third incident, District consultants engaged in harassing behavior that I immediately reported to my supervisor.

I am unaware of the final status of the investigations related to these three incidents. Although I have not yet filed a complaint with DFEH or EEOC, given these recent discriminatory and retaliatory attacks against me, I am certain DFEH will find the pattern of discrimination to be, in fact, pervasive.

California Government Code provides that it is an unlawful employment practice for any employer, labor organization, employment agency, or person to discharge, expel, or otherwise discriminate against any person because the person has opposed any practices forbidden by law or because the person has filed a complaint, testified, or assisted in any proceeding under the Fair Employment and Housing Act (FEHA). (CA. Gov. Code § 12940.)

To establish a prima facie case of retaliation, a plaintiff must show (1) he or she engaged in a protected activity, (2) the employer subjected the employee to an adverse employment action, and (3) a causal link existed between the protected activity and the employer's action.

In the case of Wysinger v. Automobile Club of Southern California, the court found retaliation when: an employer unlawfully retaliated against a former employee for filing an age discrimination claim in violation of the Fair Employment and Housing Act by declining to transfer him to another office; the employee's supervisor threatened to "crush" managers who opposed the employer's new compensation plan, which was the basis of the employee's age discrimination claim; the employee was not invited to serve on management committees or to apply for management positions, and was treated with coldness between the time he filed the age discrimination claim and the denial of his transfer; andthe employer refused to engage in an interactive process to discuss the employee's disabilities, which would have been alleviated by a transfer to an office that did not require a long commute. (Wysinger v. Automobile Club of Southern California, 157 Cal.App.4th 413. (2008).)

The actions of the acting Human Resources Director and the classified employee clearly constitute retaliation, as portions of documents that they were utilizing in various media during work hours were provided to them by and through Director Judge.

Clearly, I have been subjected to an ongoing chain of discriminatory attacks, of which Director Judge is just one link.

As you are aware, DFEH also found evidence that confirmed that Ms. Debra Dake, while working in the position of the EEO officer, was removed from her position for engaging in unnecessary investigations outside the scope of the EEO office, and for drawing conclusions unsupported by facts regarding me and other employees.

Further, Ms. Dake was found to have made discriminatory comments against African American employees; the District had full knowledge of this and yet took no actions to cure her discriminatory actions or question any of her findings where African Americans were involved.

The District never questioned Ms. Dake's findings despite this knowledge and instead allowed her biased, discriminatory, and manipulated investigative findings to stand.

The pattern of discriminatory behaviors toward myself did not start with Director Judge; the DFEH and other investigations have confirmed that they occurred well before and simultaneously with Director Judge's actions, hence the broad nature of my settlement offer.

The settlement offer is significantly lower than any request that would be made through a trial. There is a strong precedent for this kind of award. The courts have found that the amount of the award shall be based on all relevant evidence, including: willful, intentional or purposeful conduct; refusal to prevent or eliminate discrimination; conscious disregard for the rights of employees; commission of unlawful conduct; intimidation or harassment; conduct without just cause or excuse; or multiple violations of the FEHA. All of these factors are present in this case.

My settlement offer encompasses all past and current actions which have occurred.

That being said, I will again make the offer which:

1. Provides me protections from future retaliation for myself and my family.
2. Provides a quick solution, saving money from any potential litigation for the District and myself.
3. Only provides me restitution for unjust actions towards myself.

In order to avoid litigation, I again make the following offer:

1. Immediately remove and destroy all information in my employment file relative to the four negligent investigations in 2008.
2. Return my previous job classification as well as back pay, including bonuses not awarded in 2008 and the cost of living adjustment not awarded in 2008, by August 1, 2012.
3. Return all back pay to date as a result of my salary being reduced by August, 1, 2012.
4. Update my retirement pay and terms of service as a result of the loss of pay.
5. Agree in writing that I will not be administratively removed from my current position or unit before July 1, 2017.
6. Agree in writing that if the District terminates my service with or without cause before July 1, 2022, the District will pay me two and one half (2 ½) years of severance at my salary rate at the time of my release.
7. Agree in writing that there will be no change in my reporting relationship, either from the CEO or District Counsel, until 2022.
8. Maintain current Office of Government Relations staffing levels(you might want to specify the number of positions here) until at least FY 2018, unless the District has made a declaration of a fiscal emergency, declared bankruptcy, or must cut $45 million dollars from its overall budget in any one fiscal year.
9. Fix the flat nature of the positions within the Office of Government Relations by providing 1) a permanent Program Administrator position, so that advancement can occur within the unit, and 2) permanent Senior Office Specialist or another administrative support position. This would equalize the obvious staffing disparities between the Office of Government Relations and the vast majority of other units within the District.
10. Director Judge to agree to refrain from all disparate, harassing, discriminatory, and retaliatory behavior towards myself.
11. Director Judge to commit to repairing internal and external relationships, to the best of his ability, where he has challenged my professional reputation and character, by November 1, 2012.

In return for acceptance of my offer, I am prepared to waive my rights to any employment-based discrimination litigation against the District and Mr. Judge relative to the initial complaint and the recently amended complaint, and the complaints identified in this communication, and waive my rights to pursuing any other potential litigation relative to information which resulted from the investigation of the DFEH.

I appreciate your taking the time to consider my offer. If further clarification is required, I would be happy to discuss with you ASAP. I ask that the District respond in writing to my request by September 28, 2012.

Sincerely,

Rick L. Callender
[redacted]

SAN JOSE/SILICON VALLEY BRANCH OF THE
NATIONAL ASSOCIATION FOR THE ADVANCEMENT OF COLORED PEOPLE

1313 N Milpitas Blvd #175 Milpitas Ca 95035 P.O. BOX 1345 San Jose, California 95109
Phone (669)284-2173

August 10, 2020

Ms. Amy Oppenheimer
Law Offices of Amy Oppenheimer
1442A Walnut Street #234
Berkeley, CA 94709

Dear Ms. Oppenheimer.

Discrimination and the harassment of African American men and women continue to persist in the workplace. Often, it's under the guise of trying to ensure equality and justice. It is way past the time for African American executives to be treated with the respect that they deserve when they are simply trying to progress in their careers. The attempts to malign African American men and paint them as hypersexualized, criminal, or unethical is a well-known Jim Crow type tactic. The intentional violations of Mr. Rick Callender's civil rights have risen to a level to which no employed human being should be subjected. It is atrocious how blatantly and in the open this was done to an African American executive.

Mr. Rick Callender was subjected to known discriminatory tactics by two members of his board of directors, Director Barbara Keegan and Director Linda LeZotte, both women of Caucasian descent.

What happened, and continues to happen, to Mr. Callender is exactly why we are marching in the streets. African American men and women should not be treated like slaves and in an unjustified and discriminatory way in the workplace.

The illegal, unethical, and discriminatory actions of Directors Keegan and LeZotte in this private and confidential employment matter, was nothing more than both of these Directors placing their collective knees on Mr. Callender's neck, in an attempt to suffocate any fair chance he would have to obtain a new job, as well as to kill his employment in his prior job by making him resign, or be fired.

It is clear to the SJ/SV NAACP that as a result of Mr. Callender's age, race, color, and gender, Directors Keegan and LeZotte intentionally retaliated against, intentionally harassed, intentionally discriminated against, and intentionally violated the rights of Mr. Callender in the following ways:

1. Directors Keegan and LeZotte engaged in a retaliatory campaign against Mr. Rick Callender due to his past complaints, settlements and DFEH findings against past Director Joe Judge.

2. Directors Keegan and LeZotte arranged for and/or participated in the stealing and release of confidential employee files of Mr. Callender. The release of partial and confidential information contained in the files of Mr. Callender was an intentional attempt to violate Mr. Callender's right to privacy, harass Mr. Callender, and was a retaliatory strike due to Mr. Callender's settlements, and an attempt to malign his good character and reputation.

SAN JOSE/SILICON VALLEY BRANCH OF THE
NATIONAL ASSOCIATION FOR THE ADVANCEMENT OF COLORED PEOPLE

1313 N Milpitas Blvd #175 Milpitas Ca 95035 P.O. BOX 1345 San Jose, California 95109
Phone (669)284-2173

3. Directors Keegan and LeZotte violated The Fair Chance Act (Assembly Bill No. 1008), Government Code § 12952 which makes it illegal for employers in California to ask about, or investigate, the criminal record of job applicants before making a job offer. This was an attempt to harass and discriminate against Mr. Callender.

4. Directors Keegan and LeZotte intentionally attempted to malign Mr. Callender's reputation with local media, and the general public, and tried to promote false and misleading stories about him. This was an attempt to harass and discriminate against Mr. Callender.

5. Directors Keegan and LeZotte engaged in a public campaign, which included speaking with Valley Water staff, Directors, and other elected officials, to blacklist Mr. Callender. This was an obvious attempt to try and prevent Mr. Callender from applying for, or obtaining, the job of CEO, by trying to force him to quit, or to ultimately be fired, and as such violated at minimum the spirit of Labor Code (§1050-1053). This was an obvious attempt to harass and discriminate against Mr. Callender.

Issue 1
Directors Keegan and LeZotte engaged in a retaliatory campaign against Mr. Rick Callender due to his past complaints, settlements and DFEH findings against past Director Joe Judge

In California retaliation is defined as the following:

1. Your employer takes an adverse employment action against you or treats you in a discriminatory manner;

2. Because you engaged in a protected activity.

Mr. Callender filed a very public complaint against past Director Joe Judge, and it is well known and documented that Mr. Callender asserted, and asked for investigations into the fact that past Director Joe Judge attempted to discriminate again Mr. Callender and to have him fired and tried to malign his character and reputation.

A third party investigation by the DFEH found that many of Mr. Callender's assertions relative to Mr. Judge against him were valid. (See DFEH Findings attached). A third-party investigation by Valley Water resulted in mixed findings. (See Valley Water investigation findings). Regardless, there is evidence of past Director Joe Judge and Valley Water directly attempting to harass, target, and discriminate against Mr. Callender, and further, Mr. Callender's complaint against past Director Joe Judge should not result in retaliatory attempts to remove him from his job. In slightly over five years following Mr. Callender's settlement, Directors Keegan and LeZotte started to harass and retaliate against Mr. Callender.

SAN JOSE/SILICON VALLEY BRANCH OF THE
NATIONAL ASSOCIATION FOR THE ADVANCEMENT OF COLORED PEOPLE

1313 N Milpitas Blvd #175 Milpitas Ca 95035 P.O. BOX 1345 San Jose, California 95109
Phone (669)284-2173

Directors Keegan and LeZotte engaged in phone conversations and meetings with retired Director Joe Judge in order to devise ways to retaliate and prevent Mr. Callender from keeping his job as Chief of External Affairs and to ensure that Mr. Callender would not be able to obtain the position of CEO.

Director Keegan openly bragged about her and Director LeZotte's coordination and assistance with, and from, Joe Judge, and as a result of his conversations with Directors LeZotte and Keegan, past Director Judge utilized his relationship with Congresswoman Zoe Lofgren to have her Chief of Staff, Sandra Soto, make phone calls to try and malign Mr. Callender's reputation, and to try and block votes for Mr. Callender for CEO.

Witness List
Internal Parties: Norma Camacho, Rick Callender, Director Kremen, Director Keegan, Director LeZotte
External Parties: Past Directors Don Gage and Joe Judge; Sandra Soto

ISSUE 2
Directors Keegan and LeZotte arranged for and/or participated in the stealing and release of confidential employee files of Mr. Callender. The release of partial and confidential information contained in the files of Mr. Callender was an intentional attempt to violate Mr. Callender's right to privacy, harass Mr. Callender, and was a retaliatory strike due to Mr. Callender's settlements, and an attempt to malign his good character and reputation.

The right to privacy guaranteed by the California Constitution protects employee personnel files from improper disclosure to third parties. Employers have the responsibility to ensure that personnel records are kept private and access to the records is limited to those persons with a legitimate business need.

Directors Keegan and LeZotte arranged for and/or participated in the stealing and release of Mr. Calendar's confidential employee files in 2018. The release of partial and confidential information contained in the files of Mr. Callender was an intentional attempt to violate Mr. Callender's right to privacy, was a retaliatory strike due to Mr. Callender's settlements, and was an attempt to malign his good character and reputation.
In or around early November 2018, HR Deputy Anil Comelo asked then EEO Administrator Anna Noriega to make him a copy of the files of the EEO investigation of Rick Callender relative to Jessica Collins so that he could take it home and read it. Anna Noriega made the confidential copies and provided the files to Mr. Comelo. The following week Mr. Comelo told Ms. Noriega that she should also make copies of the files because they would be used when he applied for CEO.

Ms. Noriega reported this information to at the time CEO Norma Camacho. Mr. Comelo was later placed on leave due to this and other unrelated actions.

Ms. Noriega has long acted with animus towards Mr. Callender, even recently trying to suggest ways that his pay for performance for which he was righteously due be blocked, and trying to block other benefits for which he was due as CEO. It may have been because of the animus of Ms. Noriega toward Mr. Callender that Ms. Noriega participated in the copying and stealing of confidential files.

SAN JOSE/SILICON VALLEY BRANCH OF THE
NATIONAL ASSOCIATION FOR THE ADVANCEMENT OF COLORED PEOPLE

1313 N Milpitas Blvd #175 Milpitas Ca 95035 P.O. BOX 1345 San Jose, California 95109
Phone (669)284-2173

Directors Keegan and LeZotte read direct details and quotes from the stolen files during Mr. Callender's interview process, which directly demonstrates and proves that they were in receipt of, and utilizing, the stolen files which were reported taken and copied by Anna Noriega to past CEO Norma Camacho.

The Directors' release of partial information in Mr. Callender's employee files is a direct violation of California law Gov. Code, § 6254, subd. (c).
The Directors may try to claim a public interest exception, but the public interest exemption protects certain personnel records from disclosure. In determining whether to allow access to personnel files, the courts have determined that the tests under each exemption are essentially the same: the extent of the local agency employee's privacy interest in certain information and the harm from its unwarranted disclosure is weighed against the public interest in disclosure.

Decisions from the California Supreme Court have determined that local agency employees do not have a reasonable expectation of privacy in their name, salary information, and dates of employment. The disclosure of personnel records outside of the aforementioned record would likely constitute an unwarranted invasion of personal privacy.

Further, California state law provides that persons found guilty of stealing, willfully destroying, mutilating, defacing, altering or falsifying, removing or secreting, the whole or any part of such a record, map, book, paper or proceeding, or who permits any other person to do so, are punishable by imprisonment in state prison, or in a county jail not exceeding one year, or by a fine not exceeding $1000, or by both fine and imprisonment (Government Code [GC] section 6220-6201). The California Department of General Services applies this law to records of the Office of Human Resources.
Directors Keegan and LeZotte likely participated, and are accomplices, in the stealing of Mr. Callender's employee files, but at minimum they are clearly complicit in the stealing, removing and secreting of the files due to the fact they utilized the files during the interview process and shared copies with external parties, as will be discussed later.

Further, Director LeZotte read exact quotes directly from one of the stolen documents during Mr. Callender's consideration for CEO. Director LeZotte claimed that she had acquired the document from legal counsel during the course of Mr. Callender's settlement negotiations in the prior years.

Witness List
Internal Parties: Anna Noriega, Norma Camacho, Tina Yoke, Melanie Richardson, Rick Callender, Stan Yamamoto, Brian Hopper, Directors: All seven directors were present for the reading of the file by Director LeZotte.
External Parties: Past employee Anil Comelo

Issue 3
Directors Keegan and LeZotte violated The Fair Chance Act (Assembly Bill No. 1008), Government Code § 12952 which makes it illegal for employers in California to ask about, or investigate, the criminal record of job applicants before making a job offer. This was an attempt to harass and discriminate against Mr. Callender.

SAN JOSE/SILICON VALLEY BRANCH OF THE
NATIONAL ASSOCIATION FOR THE ADVANCEMENT OF COLORED PEOPLE

1313 N Milpitas Blvd #175 Milpitas Ca 95035 P.O. BOX 1345 San Jose, California 95109
Phone (669)284-2173

As Valley Water knows, state law prevents several things as it relates to criminal background information and checks. Valley Water's recruitment process, both prior to the recruitment, and during the recruitment did not take The Fair Chance Act into account. Areas intentionally disregarded by Directors LeZotte and Keegan are as follows:

● Asking about or considering criminal history before a conditional job offer has been made.

● Considering information about arrests not followed by conviction, participation in pretrial or post trial diversion programs, or convictions that have been sealed, dismissed, expunged, or statutorily eradicated

● Not making an individualized assessment considering the nature and gravity of the conduct, the time passed, and the nature of the job held or sought

● Not explaining the applicant's right to submit evidence challenging the conviction history report, mitigating circumstances, or circumstances regarding your rehabilitation

● Not notifying Mr. Callender in writing of his right to file a complaint with DFEH

Director Keegan shared with many parties, both internally and externally, the fact that she believed that Rick Callender was a known felon, including having multiple felonies, and that this should prevent him from being considered for the CEO position, and should preclude him from being Chief of External Affairs. This is in direct violation of the spirit and the letter of the law.

Director Keegan has been quoted as saying, "over my dead body will Rick Callender ever advance at this organization." This was many months prior to the position ever becoming vacant, or even being announced that the past CEO was retiring.
After hearing about the conversation in which Director Keegan had asserted these facts with past COO Nina Hawk, and the fact that Nina Hawk was sharing with other Valley Water employees what she had been told by

Director Keegan and LeZotte pushed for Rick Callender to undergo a criminal background check, something that has never been done for an existing employee for any executive position in the history of Valley Water.

As evidenced by the text from Director Keegan to Director Kremen in December of 2019, Director Keegan was conducting her own investigation of Mr. Callender and pushing the information to the newspaper as an expose of Mr. Callender. This was well prior to the job of CEO being advertised.

Valley Water knows that California law provides that an employer cannot obtain prohibited arrest or conviction information from a source other than an employee and then use it for making any employment decisions.

Witness List
Internal Parties: Liz Bettencort, Norma Camacho, Melanie Richardson, Rick Callender, Odilia Leonardo, Patricia Medina, Tony Vye, Director Kremen, Director Varela, Director Santos

SAN JOSE/SILICON VALLEY BRANCH OF THE
NATIONAL ASSOCIATION FOR THE ADVANCEMENT OF COLORED PEOPLE

1313 N Milpitas Blvd #175 Milpitas Ca 95035 P.O. BOX 1345 San Jose, California 95109
Phone (669)284-2173

External Parties: Jennifer Wadsworth, Metro Newspapers, Metro owner Dan Pulcrano, Past COO Nina Hawk

Issue 4
Directors Keegan and LeZotte intentionally attempted to malign Mr. Callender's reputation with local media, and the general public, and tried to promote false and misleading stories about him. This was an attempt to harass and discriminate against Mr. Callender.

The California Supreme Court addressed the importance of reputation and the damaging effects of employers trying to blacklist employees, stating:

"Good character, or reputation, consists of the general opinion of people respecting one. It is built up by a lifetime of conduct. It is probably the dearest possession that a man has, and once lost is almost impossible to regain. The possession of a good reputation is conducive to happiness in life and contentment. The loss of it, . . . brings shame, misery, and heartache."

Society's interest in redressing the harm done to one's reputation is strong… Moreover, "[t]he harm done to one's reputation can never be fully undone."

Directors Keegan and LeZotte have attempted to ensure that the harm to Mr. Callender's reputation can never be undone, with their accusations and falsehoods.

It is clear that Directors LeZotte and Keegan went on a campaign to malign and hurt Mr. Callender's reputation as described above and below.

Director Keegan worked with Metro Newspapers to encourage them to file multiple records requests in 2019, after she represented to Metro Newspaper that Mr. Callender had been the subject of multiple settlements because of his "behaviors." This was entirely false, however the Metro submitted the requests to follow up on the lying witch hunt Director Keegan was promulgating. Further, Director Keegan released limited copies of Mr. Callender's employee files to the Metro to prove her accusation. These files may have been shared with many others, however that is not known.

Further, after conducting her own failed criminal investigation into Mr. Calendar's past, she falsely tried to represent to the Metro that Mr. Callender was a felon and that no one knew about his multiple convictions.

Ultimately the Metro did write several stories which had been long pitched by both Directors Keegan and LeZotte.

See issues 3 and 5.

Witness List
Same witnesses for issues 3 and 5

Issue 5

SAN JOSE/SILICON VALLEY BRANCH OF THE
NATIONAL ASSOCIATION FOR THE ADVANCEMENT OF COLORED PEOPLE

1313 N Milpitas Blvd #175 Milpitas Ca 95035 P.O. BOX 1345 San Jose, California 95109
Phone (669)284-2173

Directors Keegan and LeZotte engaged in a public campaign that included speaking with Valley Water staff, Directors, and other elected officials, to blacklist Mr. Callender. This was an obvious attempt to try and prevent Mr. Callender from applying for, or obtaining, the job of CEO, by trying to force him to quit, or to ultimately be fired, and as such violated at minimum the spirit of Labor Code Labor Code (§1050-1053). This is an obvious attempt to openly harass and discriminate against Mr. Callender.

California law specifically prohibits blacklisting. Blacklisting is often due to discriminatory factors and intent based on race, sex, color, national origin, or gender.

Labor Code (§1050-1053) specifies the following acts as blacklisting:

● Preventing or attempting to prevent a former employee from getting work through misrepresentation.
● Knowingly permitting or failing to take reasonable steps to prevent blacklisting.
● In a statement about why an employee was discharged or left employment, implying something other than what is explicitly said, or providing information that was not requested. Furnishing information without a special request is prima facie evidence of a violation.

Even though Mr. Callender was not a former employee of Valley Water, the actions of Directors Keegan and LeZotte are the equivalent of blacklisting Mr. Callender as he sat in his job as the Chief of External Affairs and aspired to become CEO. This is due to the fact that the offending Directors actively activated and engaged in a public campaign designed to force Mr. Callender to quit by maligning his good reputation, by trying to engage other elected officials, members of the public, other elected officials' staff, past elected officials and employees to prevent Mr. Callender from applying for the position of CEO, obtaining the position of CEO, and to try and force him to resign.

This is evidenced by the phone calls and lobbying efforts with external and internal parties asking them to call sitting Directors of Valley Water, and other elected officials, to oppose Mr. Callender in his past job and to oppose his employment attempt for CEO.

Many elected officials and past elected officials received calls from Directors Keegan and LeZotte and engaged in conversations with other parties in an attempt to block Mr. Callender's candidacy, and from him being able to obtain the job.

Witness List

Internal Parties: All seven members of the Board of Directors, Norma Camacho
External Parties: Jennifer Wadsworth, Metro Newspapers, Don Gage, Sandra Soto (Zoe Lofgren Chief of Staff), CSJ Councilmember Maya Esparza, CSJ Councilmember Dev Davis, Angelica Ramos (Susan Ellenberg staff), Milpitas Councilmember Bob Nunez

Santa Clara Valley Water District

File No.: 21-0071

Agenda Date: 1/26/2021
Item No.: *4.2.

BOARD AGENDA MEMORANDUM

SUBJECT:
Approval of Redistricting Advisory Committee Nominations, Guidelines and Procedures, and First Meeting Agenda.

RECOMMENDATION:

A. Approve the nominations for appointment to the Santa Clara Valley Water District 2021 Redistricting Advisory Committee;
B. Review and approve the recommended guidelines, direction and procedures for the Redistricting Advisory Committee, Water staff, and Board of Directors; and
C. Review and approve the agenda for the Redistricting Advisory Committee's first meeting, on March 17, 2021.

SUMMARY:
Section 7.7 of the District Act, in addition to federal and state law, requires that boundaries of electoral districts must be adjusted before the first day of November of the year following each decennial federal census is taken. Adjustment of electoral districts is usually accomplished through the completion of a redistricting study to ensure that each modified district meets the United States Supreme Court's one-person, one-vote test (which requires electoral districts to be apportioned according to population) and to ensure compliance with the federal Voting Rights Act. During the December 8th, 2020 Board meeting, the Board of Directors authorized the establishment of the Redistricting Advisory Committee (RAC) to assist with the following: 1) the completion of a redistricting study in an inclusive, transparent and comprehensive manner; and 2) to encourage community input in the redistricting process. At its December 8th meeting, the Board also acted on several guidelines presented by staff as well as the recommended meeting schedule for the RAC.

With the authorization to form the RAC, the Board is now asked to approve the nominations of the individuals for appointment to the RAC. Because nominations were still in progress at the time of preparation for this report, the names of those nominated individuals will be available and published in a supplemental staff report to this agenda item, which will be presented to the Board during its January 26, 2021 meeting. The Board is also being asked to discuss and act on several additional guidelines and procedures that will further guide the operation of the RAC. The purpose of these additional guidelines is to further encourage an open, fair and transparent study. Finally, the Board is asked to review and approve the agenda for the RAC's first meeting, now scheduled for March 17, 2021.

Redistricting Advisory Committee Meeting Agenda

The RAC is scheduled to meet one or two times a month beginning on March 17, 2021 and ending on August 18, 2021, for a total of eight meetings. The first meeting's proposed agenda is included as Attachment 1. Future meeting agendas will be set by the RAC, consistent with the Board's criteria for developing a draft redistricting map (or maps) for the Board's review, possible modification and approval in September or October 2021.

Ensuring and Open, Fair and Transparent Redistricting Process

During the redistricting process of 2010, when the Santa Clara Valley Water District (Valley Water) expanded from five to seven districts, transparency procedures were established to ensure an open, fair and transparent redistricting process.

For the 2011 redistricting process, the Board adopted the additional transparency guidelines, direction and procedures for the Committee. Staff is recommending the Board now adopt those additional guidelines and procedures to further encourage maximum public participation while further ensuring an open, fair and transparent process.

The additional recommended guidelines, direction and procedures are as follows:

1) The RAC shall follow all applicable Federal and State laws in addition to the criteria established by the Board of Directors for the redistricting process.

2) The RAC, through its public discussions, shall provide the sole and only direction to Valley Water staff and supporting consultants for any and all changes to the redistricting maps under consideration by the RAC.

3) The RAC shall consider all maps created by any member of the public through the public participation process.

4) The RAC shall ensure that all meetings are open/accessible to the public.

5) The RAC may establish subcommittees, as needed, for specific activities or goals. These meetings shall be open to the public.

6) The RAC will be subject to the requirements of the Ralph M. Brown Act.

7) As a standing Committee meeting agenda item, the Committee members shall disclose any and all conversations with any parties, internal or external of Valley Water, including the name or

names of the parties and the contents of communication, whether verbal or written, regarding Valley Water's redistricting efforts.

8) All emails, letters, phone calls and other official communications regarding redistricting will be documented and copies will be provided to the RAC as part of every agenda.

9) No member of Valley Water staff or Board of Directors shall attempt to influence the RAC while the Committee is engaged in the process which will result in a map or maps being sent to the Valley Water's Board of Directors for their consideration and deliberation.

Staff believes these recommended additional guidelines, direction and procedures will further encourage an open, fair and transparent redistricting process for both the Committee and the public. The recommended agenda is meant to ensure each Committee meeting is conducted in support the proposed guidelines.

FINANCIAL IMPACT:
There is no additional financial impact associated with this item.

CEQA:
The recommended action does not constitute a project under CEQA because it does not have a potential for resulting in direct or reasonably foreseeable indirect physical change in the environment.

ATTACHMENTS:
Attachment 1: Draft 031721 RAC Agenda
*Supplemental Agenda Memorandum
*Supplemental Attachment 1: Nominee Background Information
Handout 4.2-A: PowerPoint

UNCLASSIFIED MANAGER:
Don Rocha, 408-630-2338

THIS PAGE INTENTIONALLY LEFT BLANK

CENSUS REDISTRICTING ADVISORY COMMITTEE

March 17, 2021
6:00 p.m. – 8:00 p.m.
Via Zoom
Meeting ID: xxx xxxx xxxx
Passcode: xxxxxx
+xxxxxxxxxxx..xxxxxxxxxxx

Proposed Draft Agenda

Time Certain

I. **CALL TO ORDER/ROLL CALL**
   A. Welcome and Self Introductions
6:05 p.m.
      1. Census Redistricting Advisory Committee Members
      2. Valley Water Staff
      3. Redistricting Consultant and Outside Legal Counsel

II. **PUBLIC COMMENT:** This portion of the meeting is reserved for any persons wishing to address the Committee on a matter not on the agenda. Speakers are limited to two minutes. The law does not permit Committee action or extended discussion on any item not on the agenda, except under special circumstances. All statements that require a response may be placed on the agenda of the next meeting of the Committee.

III. **APPROVAL OF MINUTES**
   A. Approval of Minutes – None

IV. **COMMITTEE MEMBER REPORTS:** Committee members may make brief announcements and/or reports on their activities. Unless a subject is specifically listed on the agenda, the report is for information only, and not discussion or decision.

V. **OLD BUSINESS**
   A. None

VI. **NEW BUSINESS**
   A. Election of Committee Chair and Vice Chair
   B. The Redistricting Process: Summary and Overview of Legal Guidelines
   C. Role and Objectives of the Committee
   D. Review of Draft Work Plan and Discussion of Census Data
   E. Review of Existing Boundaries

(OVER)

F. Future Committee Meeting Schedule
G. Public Participation Kits
   1. None
H. Review of Redistricting Correspondence
   1. None
I. Media Articles on Redistricting Process
   1. None

VII. **ADJOURNMENT:** Adjourn to next Zoom regular meeting at 6:00 p.m. on April 21, 2021 (a quorum of the Board may be in attendance)

Redistricting Advisory Committee Role and Objective

The role of the Redistricting Advisory Committee is to 1) assist with the completion of a redistricting study in an inclusive, transparent and comprehensive manner; 2) garner community input on the formation of new districts; and 3) provide the Board of Directors with a recommended map or maps depicting seven districts for the Board's final consideration and approval.

Live Translation

Arrangements for the live translation in an applicable language of a public hearing or workshop held pursuant to the redistricting study will be made if a request for translation is made at least 72 hours before the hearing or workshop, unless less than five days' notice are provided for the hearing or workshop, in which case the request shall be made at least 48 hours before the hearing or workshop. Requests for translation should be made by contacting the Clerk of the Board by phone at (408) 265-2600, or at the Valley Water District Headquarters Building, 5700 Almaden Expressway, San Jose, CA 95118.

Public Records

All public records relating to an open session item on this agenda, which are not exempt from disclosure pursuant to the California Public Records Act, that are distributed to a majority of the legislative body will be available for public inspection at the same time that the public records are distributed or made available to the legislative body by contacting the Office of the Clerk of the Board by phone at (408) 265-2600, or at the Valley Water District Headquarters Building, 5700 Almaden Expressway, San Jose, CA 95118.

Proposed Draft Agenda

Santa Clara Valley Water District

File No.: 20-1193

Agenda Date: 1/26/2021
Item No.: *4.2.

SUPPLEMENTAL BOARD AGENDA MEMORANDUM

SUBJECT:
Approval of Redistricting Advisory Committee Nominations, Guidelines and Procedures, and First Meeting Agenda.

REASON FOR SUPPLEMENTAL MEMORANDUM:
This agenda memo conveys additional information received after the initial agenda memo was released, consistent with Executive Limitations Policy EL-7-10-5. Specifically, this agenda memo contains the Board of Directors' nominations to the Redistricting Advisory Committee

RECOMMENDATION:

A. Approve the nominations for appointment to the Santa Clara Valley Water District's (Valley Water) 2021 Redistricting Advisory Committee (Committee).
B. Review and approve the recommended guidelines, direction and procedures for the Committee, Valley Water staff and Board of Directors.
C. Review and approve the agenda for the Committee's first meeting on March 17, 2021.

SUMMARY:
At its December 8, 2020 meeting, the Board approved the formation of the 2021 Redistricting Advisory Committee. The Committee will consist of seven members of the public, appointed by the Board.

Role of the Committee
The role of the Committee is to act as an ad hoc advisory body to the Board on redistricting Valley Water's seven electoral districts, as required following each decennial census. In that role, each Committee member will represent the public and help shape the revised maps the redistricting consultant will prepare and develop for eventual Board review and approval. The Committee's primary tasks are to:

1. Oversee a redistricting study conducted in an inclusive, transparent and comprehensive manner;

2. Use the knowledge of their districts to review the demographic details of the 2020 federal census data presented by the consultant conducting the study;

3. Oversee the proposed nine scheduled public meetings, including taking public comment and draft maps submitted by the public on potential revisions to the electoral districts; and

4. Guide the development of the one or more draft maps that will be presented to the Board for review and approval in the October timeframe.

Redistricting Advisory Committee Nominations

Nominations submitted by the Board of Directors to the Committee are as follows:

Director	Nominee
Chair Tony Estremera:	Alfredo M. Morales
Vice Chair Gary Kremen:	Raven Malone
Director John Varela:	Juan Miguel Munoz-Morris
Director Barbara Keegan:	Emilie Gatfield
Director Richard Santos:	Michael Krauss
Director Linda LeZotte:	Michael Gross
Director Nai Hsueh:	Howard Miller

Biographies for each nominee are included in Attachment 1.

FINANCIAL IMPACT:
There is no financial impact associated with this item.

CEQA:
The recommended action does not constitute a project under CEQA because it does not have a potential for resulting in direct or reasonably foreseeable indirect physical change in the environment.

ATTACHMENTS:
Supplemental Attachment 1: Nominee Background Information

UNCLASSIFIED MANAGER:
Don Rocha, 408-630-2338

Nominees for the 2021 Redistricting Advisory Committee

Alfredo M. Morales, Principal Attorney, Morales & Leaños
(nominated by Chair Tony Estremera, District 6)

Mr. Morales was born and raised in San Jose and attended schools in Eastside San Jose. He graduated from Santa Clara University in 1972 and from UC Berkeley Law School in 1975. He is licensed to practice law in the State of California, the United States District Court for the Northern District of California, the United States Court of Appeals for the Ninth Circuit and the United States Supreme Court. He is a principal in the firm of Morales & Leaños. Mr. Morales' firm handles criminal defense, civil rights and personal injury cases.

Since graduating from law school Mr. Morales has been a member of the San Jose Housing Commission, County Planning Commission and a member of the board of directors for the Mexican Heritage Corporation. He is also a member in good standing with the State Bar of California, Santa Clara County Bar Association and the La Raza Lawyers Association.

Raven Malone, Systems Engineer
(nominated by Vice Chair Gary Kremen, District 7)

Raven Malone is a Systems Engineer with an Undergraduate and master's degree in electrical engineering. She worked for the United States military as an Electrical and Systems Engineer for 6 years before moving to California and switching to the private sector. Her professional resume includes software development, leading a team of engineers on a multi-billion dollar classified program, and creating new technology for the Army. In 2020, she ran for City Council in Palo Alto where her main issues were creating better infrastructure, advocating for more housing, and reimagining public safety. While she lost her election, she is committed to bringing important issues to the table and lifting the voices of those who feel unheard. She is a member of Palo Alto Forward, Peninsula Young Democrats, the 2021 board for the Peninsula Democratic Coalition, and she serves as the liaison for Josh Becker for the Democratic Central Committee.

Juan Miguel Munoz Morris, Contracting Professional, County of Santa Clara *(nominated by Director John Varela, District 1)*

Mr. Munoz-Morris is a contracting professional for the County of Santa Clara Social Services Agency. He has an MBA from Purdue University and a Bachelor's from Cal Poly San Luis Obispo. His family has a proud history of service to the community, which he is building on as a Planning Commissioner for the City of Morgan Hill (a role he has held for the last 3.5 years). He believes that resource management, in particular water management, is a critical component of a sustainable lifestyle. As a new parent, he wants to ensure a good future for his daughter and her peers, and would welcome the chance to serve on the Redistricting Advisory Committee.

Emilie Gatfield, Political Consultant *(nominated by Director Barbara Keegan, District 2)*

Emilie Gatfield is a political consultant, specializing in connecting clients with support from community groups and organizations. Ms. Gatfield began her professional career in accounting, working in the legal and manufacturing sectors, before transitioning into the non-profit sector. Within the non-profit sector, her work encompassed training, administration, and fundraising, always with a focus on meeting the needs of low-income communities. Since beginning to work independently, Ms. Gatfield has worked extensively with organized labor and neighborhood groups.

Ms. Gatfield has served on the boards of a variety of organizations, from non-profits focused on the needs of low-income communities to her homeowners association; she has also been an active member of the Democratic Party for many years, on both the county and state level. She has lived in Downtown San Jose for more than 20 years, with her husband and a varying number of cats.

Michael Kraus, retiree, President of the Penitencia Neighborhood Association *(nominated by Director Richard Santos, District 3)*

Michael Kraus was born and raised in Saint Louis, Missouri. Michael attended college at the University of Illinois – Chicago. Upon graduating with a BSEE, Michael moved to San Jose, CA and began his professional career at the Lockheed Missiles and Space Company, focusing on technical solutions, Subcontracts and Program Management, retiring in 2014. Michael is the president of the Penitencia Neighborhood Association and has been actively involved in the community since 2013. Accomplishments for Michael include but not limited to: City of San Jose Commendation, RLEI - Neighborhood Champion, California Legislature Assembly Community Hero, California State Senate Community Certificate of Recognition and UNSCC and Catholic Charity Penitencia Neighborhood Association Award.

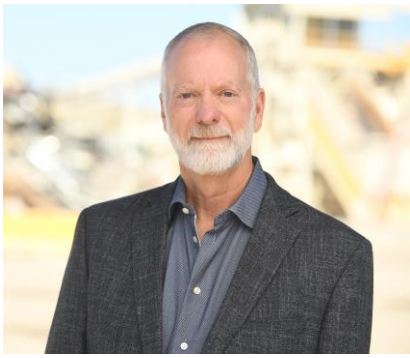

Michael Gross, Director of Sustainability, Zanker Recycling *(nominated by Director Linda LeZotte, District 4)*

Mr. Gross has been in the waste and recycling industry since 1979 when he started his own garbage collection company while still in high school. In 2011, Mr. Gross was named the Director of Sustainability for GreenWaste and the Zanker family of companies. This position allows him to coordinate and institutionalize sustainability efforts across divisions and among business relationships. He focuses on greenhouse-gas emission's reductions, procurement opportunities, C&D diversion opportunities, waste management and recycling alternatives and marketing. He provides leadership to reach the company's environmental goals, advocates the transformation of the waste industry, and works with the community to integrate sustainability into their daily lives. Mr. Gross is a board member of the Recycling Certification Institute, Santa Visits Alviso Foundation and the Legacy Alviso Foundation.

Howard Miller, Professor, West Valley College *(nominated by Director Nai Hsueh, District 5)*

Howard Miller moved to Santa Clara County in 1985 and Saratoga in 1993 and, with his wife, raised 5 kids. He is named on 20 patents, retired from Apple in 2016 and is currently a Professor at West Valley College. He holds a BS in Engineering from Cal Poly and a MS in Computer Science from Stanford. He was elected to the Saratoga City Council in 2008, 2012 and 2016. Mayor in 2011, 2015 and 2020. He served on regional agencies, notably: VTA Policy Advisor Committee for 11 years; VTA HWY 85 committee 4 years; Silicon Valley Clean Energy board for 4 years; West Valley Solid Waste JPA for 5 years. Prior to public office, he held various board positions in the Saratoga Soccer AYSO; On the SUSD Technology committee; Assistant Scout Master; The Kevin Moran Park Task force; among others. Howard has always been involved in his community.

Valley Water 2021 Redistricting Process (2020 Census)

January 26, 2021

At the December 8, 2020 Board meeting, the Board:

- ✓ Approved the establishment of a 7-Member Redistricting Advisory Committee (RAC) and a process for appointment
- ✓ Adopted criteria to guide the redistricting process
- ✓ Approved a schedule and an appointment process for the RAC

New Actions for Board Consideration/Approval:

A. Approve nominations for appointment to the RAC

B. Approve additional recommended guidelines, directions and procedures

C. Approve the agenda for the RAC's first meeting

Nominations from the Board for Appointment to the RAC

Alfredo M. Morales *(nominated by Chair Tony Estremera)*

Raven Malone *(nominated by Vice Chair Gary Kremen)*

Juan Miguel Munoz-Morris *(nominated by Director John Varela)*

Emilie Gatfield *(nominated by Director Barbara Keegan)*

Michael Kraus *(nominated by Director Richard Santos)*

Michael Gross *(nominated by Director Linda LeZotte)*

Howard Miller *(nominated by Director Nai Hsueh)*

Criteria for Nominees for Appointment to the RAC

Each person nominated for the RAC meets the following requirements:

- Resides in the electoral district of the appointing Director
- Registered voter
- Understands the time commitment needed to serve on the RAC

Adoption of Additional Guidelines and Procedures

1. Follow all applicable Federal and State laws in addition to the criteria established by the Board of Directors

2. The RAC shall provide the sole and only direction to Valley Water staff and supporting for any and all changes to the redistricting maps

3. All maps created by any member of the public shall be considered

4. Meetings are open/accessible to the public

5. The RAC may establish subcommittees for specific activities or goals

Adoption of Additional Guidelines and Procedures (continued)

6. RAC will be subject to the requirements of the Brown Act

7. As a standing meeting agenda item, the Committee members shall disclose any and all conversations with any parties, internal or external of Valley Water

8. All emails, letters, phone calls and other official communications regarding redistricting will be documented and copies will be provided to the Committee as part of every agenda

9. No member of Valley Water staff or Board of Directors shall attempt to influence the Committee while the RAC is engaged in the process of maps being sent to the Board of Directors for their consideration and deliberation

Next Steps

Following the Board's actions today, staff will undertake the following steps:

- Notify the nominees of their appointment to the Committee
- Initiate an extensive outreach effort to encourage public participation
- Make preparations for the first Committee meeting now tentatively scheduled for March 17, 2021 **(date likely to be adjusted)**

First RAC Meeting Delay Due to Unforeseen Factors:

- Anomalies in the Census data
- President Biden Executive Order
- Analysis of the prison population that is now mandated by the State of California
- These factors will impact the scheduled release of data, likely resulting in a delay in the Committee's start date
- First meeting in April or May

RECAP – QUESTIONS?

Staff requests Board approval on the following recommendations:

A. Approve nominations for appointment to the RAC

B. Approve recommended additional guidelines, directions and procedures for the RAC, Valley Water staff and the Board of Directors

C. Approve the agenda format for the RAC's first meeting

QUESTIONS?

Santa Clara Valley Water District

File No.: 20-1224

Agenda Date: 1/26/2021
Item No.: 4.3.

BOARD AGENDA MEMORANDUM

SUBJECT:
Consider the December 16, 2020 Board Audit Committee Recommendation to Receive and Discuss the Final Audit Report and Management Response for the District Counsel Audit, Conducted by TAP International, Inc.

RECOMMENDATION:
Consider the December 16, 2020, Board Audit Committee recommendation to receive and discuss the Final Audit Report and Management Response for the District Counsel Audit, conducted by TAP International, Inc.

SUMMARY:
On February 26, 2019, the Board approved the recommendation by the Board Audit Committee (Committee) for TAP International, Inc. (TAP) to conduct three performance audits recommended by the Board Audit Committee, including a performance audit of the District Counsel's office.

The District Counsel Audit Draft Report was presented to the Committee for their review at the October 21, 2020, Board Audit Committee meeting.

The District Counsel Audit Final Draft Report was formally issued to the District Counsel's Office on October 28, 2020. The District Counsel Audit Management Response was provided to TAP on November 17, 2020. The District Counsel Audit Final Report was provided to the Committee for review and discussion at the December 16, 2020, Committee meeting.

At the December 16, 2020 Committee meeting, the Committee approved the final audit report and management response (Attachment 1) for staff to present to the Board of Directors at the January 26, 2021, Board meeting.

FINANCIAL IMPACT:
There is no financial impact associated with this item.

CEQA:
The recommended action does not constitute a project under CEQA because it does not have the

potential for resulting in direct or reasonably foreseeable indirect physical change in the environment.

ATTACHMENTS:
Attachment 1: Final Audit Report/Management Response

UNCLASSIFIED MANAGER:
Darin Taylor, 408-630-3068

TAPInternational

Final Report

DISTRICT COUNSEL'S OFFICE CAN BENEFIT FROM ENHANCED STRUCTURE AND IMPROVED MANAGEMENT PROCESSES

December 7, 2020

Final Report by the Independent Auditor to the Board Audit Committee

Date: **December 7, 2020**

Memorandum For: **Board Audit Committee (BAC)**

From: **Independent Auditor, TAP International, Inc.**

Subject: **Transmittal of TAP International Performance Audit Report**

Attached is our final report, *District Counsel's Office Can Benefit from Enhanced Structure and Improved Management Processes*. The audit objective was to identify potential structural, organizational, and procedural improvements in the District Counsel's Office.

Our audit identified opportunities to improve service delivery and performance through an enhanced operating strategy, implementing structural and process improvement changes. The report contains five recommendations that will enhance the efficiency and effectiveness of legal services provided to Valley Water's operational and administrative units.

A summary of agency responses to the recommendations in this audit report is included in Appendix A and the full response is included in Appendix B.

TAP International, Inc.

Table of Contents

Section 1: Audit Highlights **3**
Audit Highlights 4
Why the Audit Was Conducted 4
How the Audit Was Conducted 4
What the Audit Found 4
Recommendations (in priority order) 5
Section 2: Background and Methodology **7**
Background 8
Methodology 12
Section 3: Key Findings **16**
Finding 1: Customer Satisfaction is Mixed 17
Finding 2: Updating the District Counsel's Office's Operating Model Can Enhance Customer Satisfaction 20
Other Issues: Realigning the Risk Management Unit Needs Further Study 27
Section 4: Acknowledgments **29**
Section 5: Appendices **31**
APPENDIX A – Summary of Agency Responses 32
APPENDIX B –Full Agency Response to Recommendations 35

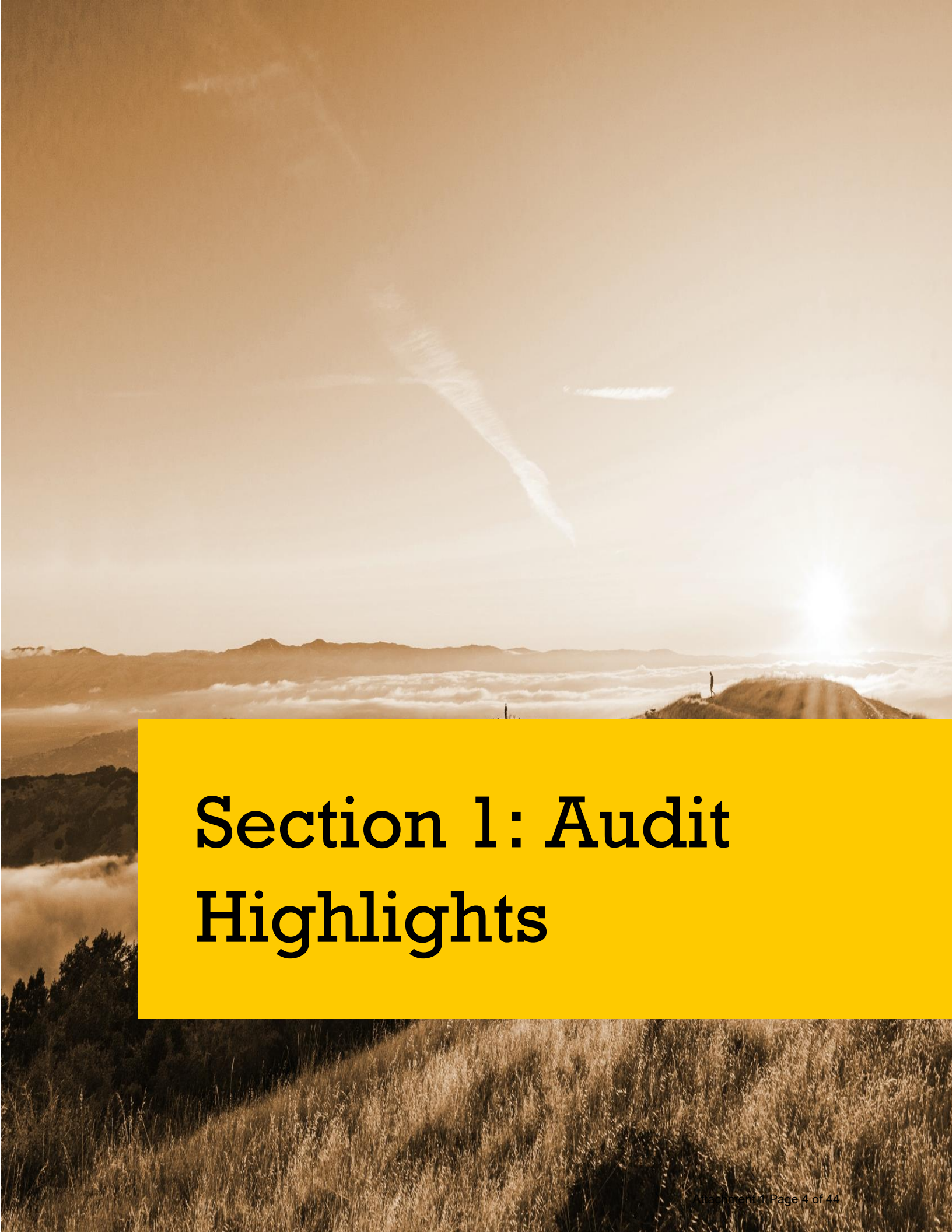

Section 1: Audit Highlights

Audit Highlights

Why the Audit Was Conducted

The Office of the District Counsel (District Counsel's Office) provides a myriad of legal services to Valley Water's Board of Directors (Board) and 80 operational and administrative offices, divisions, and units.[1] At the Board's direction, the Independent Auditor (Auditor) conducted a performance audit of the District Counsel's Office to identify potential structural, organizational, and procedural improvements.

How the Audit Was Conducted

The performance audit included a review of the District Counsel's Office organizational structure, operational performance, staff roles and responsibilities, processes, and policies and procedures. The audit work included: (1) interviews with District Counsel's Office attorneys and staff, (2) interviews with the primary customers of the District Counsel, (3) analysis of financial data, contracts, consultant agreements,[2] and other documentation related to the District Counsel's Office operations, and (4) peer agency research on structure and practices. This performance audit used qualitative evidence, documentary evidence, and other performance information to assess overall agency effectiveness. The Auditor took additional steps to corroborate and substantiate qualitative information described in the report per generally accepted government auditing standards.

What the Audit Found

Valley Water operations and administrative units generally agreed that the District Counsel's Office provides quality legal services, providing legal review, advice, and representation, but many of them raised concern about the frequency of communication and timeliness of services. This audit determined attorneys have managed and prioritized their projects and workflows without centralized processes or tools. Each attorney has been encouraged to be independent and operate their own legal service center. While this management approach provides high autonomy to attorneys and increases morale, it also creates non-uniformity in service delivery among Valley Water operational and administrative units and customer satisfaction concerns.

While there is not an established operating standard for public sector legal offices, best practices suggest that operating models are evolving from board-centric roles and as-needed support

[1] Valley Water has 13 attorneys, risk and workers compensation managers and administrative support personnel supporting seven Directors serving on the Board and over 800 regular employees. The District Counsel's Office also outsources legal services.

[2] Also referred to as professional services agreements within Valley Water.

services on a task-by-task basis to enterprise-wide models that uniformly support organizations. This audit reports various strategies to update the District Counsel's Office current operating model consistent with best management practices as well as practices identified in other public sector legal offices, such as added policy and procedural development, use of added document templates, effective workflow management, use of master services agreements, service level agreements (SLAs), performance management systems, and implementation of multi-source feedback assessments (e.g. upward, downward, and lateral input on service delivery satisfaction to and from the department, customers, and other stakeholders). Implementation of these strategies would likely increase customer satisfaction.

Recommendations (in priority order)

1. The District Counsel's Office should develop and implement a written strategy for approval by the Board that provides an updated operating model for efficient service delivery. In the development of the strategy, the District Counsel can consider, for example, enhanced policy and procedure development[3] and new/enhanced tools described throughout this report. These tools, for example, can include workflow management, SLAs, added performance measurement, use of multi-source feedback assessments, and risk-based criteria assessments.

   Estimated In-House Labor

   - Strategy Development: 24 to 36 hours to discuss and agree upon potential enhancements.
   - Strategy Implementation: Costs are dependent upon the scope of the strategy developed.

2. The District Counsel and the Information Technology & Administrative Services Chief Operating Officer should update Valley Water Administrative Policies that (1) identify areas that require the development of new contractual and agreement templates, and (2) identify the responsible party for updating existing contract, agreement, and amendment templates as well as non-disclosure agreements (NDAs). These updates should also include the responsible party for NDA monitoring.

[3] -Development of risk-based criteria for reviewing consultant agreements, purchase acquisitions, and/or other types of contracts.
-Development of criteria for prioritization and assignment of Board and Valley Water requests for services.
-Preparation (sources of information to be used) and maintenance of the Quarterly Report provided to the Board and the Litigation Matrix used to document current litigation status, which is part of the Quarterly Report.
-Clarification of EL 7.5 regarding the handling of Board member requests for the drafting of resolutions.
-Maintenance of the Legal Advice Matrix used to document the communication of advice provided to Valley Water management and staff.
-Personnel training requirements, including cross-training and succession planning.
-E-discovery procedures (currently in development).
-Criteria for risk management decision-making applicable to insurance.

Estimated In-House Labor

- Up to 36 hours to meet, confer, review, and approve updates to the administrative policies.

3. The District Counsel should convene a workgroup on planning activities or projects involving contracting opportunities with key stakeholders (E.g., Chief Executive Officer (CEO) and Chief Operating Officers (COOs)) to develop a decision-making guide for early engagement with the District Counsel Office and Risk Management.

   Estimated In-House Labor

   - Up to 24 hours to prepare for, facilitate, and document the working group meeting results.

4. The District Counsel should discuss with the Board the use of a master services agreement to add another procurement mechanism for legal services.

   Estimated In-House Labor

   - Up to five hours for preparation of memo and Board discussion.

5. The Board Audit Committee should ensure that the scope of the audit currently proposed in the annual audit work plan for the risk management function, include an evaluation of the advantages and disadvantages of implementing alternative organizational alignments for the Risk Management Unit and the Workers' Compensation programs.

   Estimated In-House Labor

   - No labor cost for the District Counsel's Office.

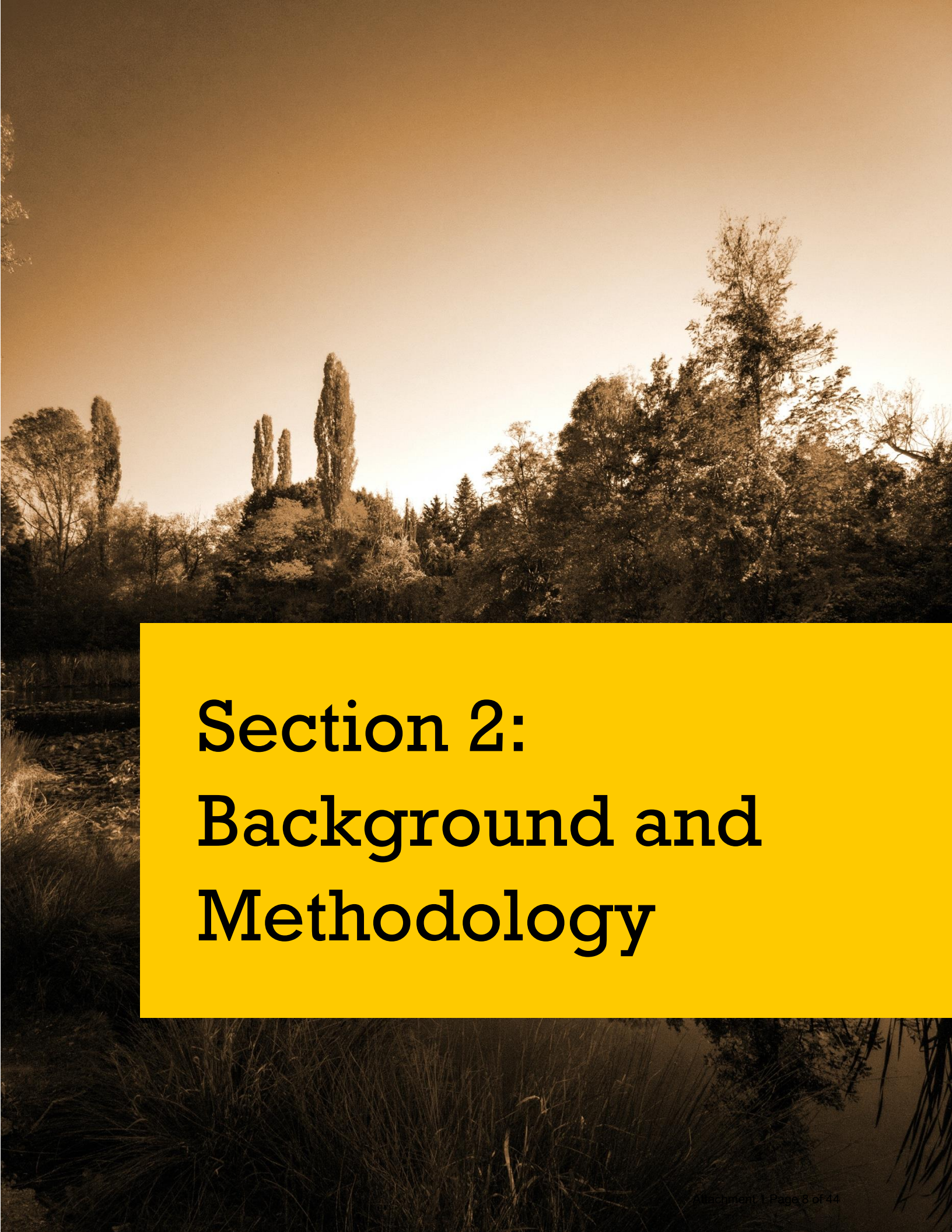

Section 2: Background and Methodology

Background

To Whom Does the District Counsel's Office Report?

The Valley Water Board directly appoints the District Counsel, who serves at the discretion of and reports directly to the Board, as shown in Figure 1 below. In addition to the District Counsel, Valley Water has two other Board Appointed Officers (BAOs) who serve as part of Valley Water's executive leadership team: The CEO and the Clerk of the Board. The District Counsel, as a BAO, is expected to "provide high quality, trustworthy and responsive legal counsel to Valley Water in a manner that creatively helps accomplish Valley Water's mission." The current District Counsel was appointed in February 2010.

Figure 1. Organizational Chart of the District Counsel's Office

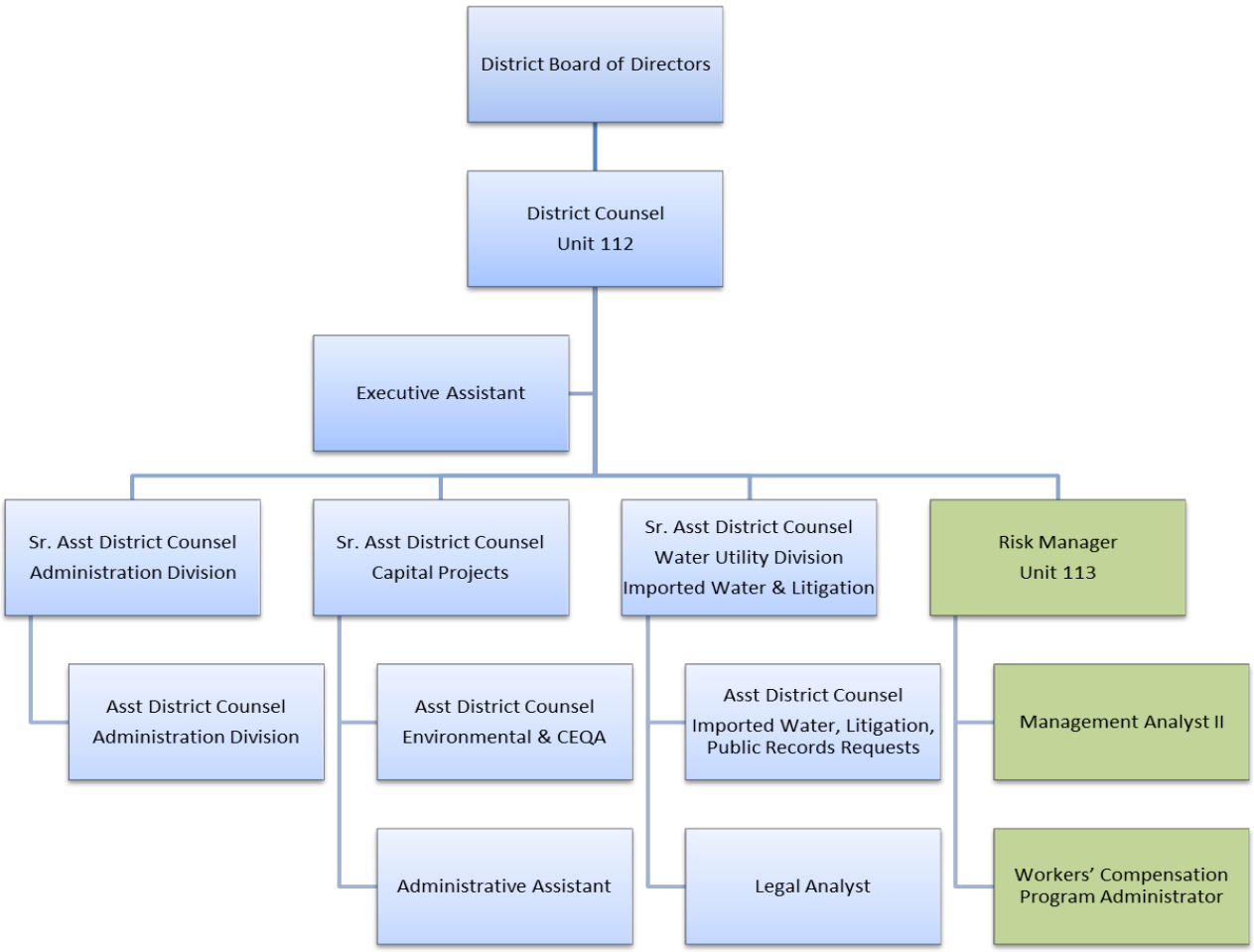

How Should a Public Legal Counsel's Office Operate?

While multiple state and local laws guide District Counsel decisions, there is not an established standard for public legal offices that guide leaders on how day-to-day management should be performed. Public legal offices consistently report to an elected governing body with day-to-day strategies varying from limited organizational maturity to robust maturity that include use of formal SLAs, integration of legal support in enterprise-wide communication strategies, formal delineation of roles and responsibility, and embedding attorneys in specific departments. The size and complexity of the public agencies drive the maturity of the operating model.

Best practices for in-house legal service delivery recommend an exact operating model communicated within the legal office and with the rest of the agency. The strategy is based on the needs of the requestors of legal services (customers), defines the roles and responsibilities of all the parties, and the processes to support consistent service delivery.[4]

What Services are Provided by the District Counsel's Office?

Nine staff members assist the District Counsel in providing legal services to Valley Water. Three additional staff support the Risk Management and Workers' Compensation programs. Key services, among others, provided by the Office address:

- Water rights,
- Construction contract and amendment review,
- Consultant agreement and amendment review,
- Procurement agreement review,
- Contract drafting and negotiation,
- Public procurement compliance,
- Employee labor agreements and human resource issues,
- Construction law,
- Real estate law,
- Environmental law,
- Litigation,
- Grant compliance,
- Finance law,
- Statutory interpretation,
- Open government and ethics issues,
- General legal advice,
- Workers' compensation, and

[4] Deloitte Legal, "In-house Legal Service Delivery – Transform Your Legal Operating Model," 2020.

- Risk management and claims.

Valley Water does not maintain or track data that would show the volume or proportion of work performed by staff members among these types of services.

How Much Does the District Counsel's Office Spend?

In fiscal year (FY) 2019, the budget to operate the District Counsel's Office was $5.4 million, a growth of 76 percent since FY 2016, due to the expansion of Valley Water projects and operations.[5] As shown in Figure 2, (shaded in grey) services and supplies contributed to the increase. A detailed analysis of the budget showed an increase in outsourced legal services.

The District Counsel functions are budgeted through the general fund, which primarily receives funding through intra-district overhead charges to Watershed and Water Utility enterprise operations and capital programs. Valley Water's financial management officials said that the District Counsel's Office does not generally seek or receive separate reimbursement for services from other revenue sources.

Figure 2. District Counsel's Office Budget, FY 2016 to 2020

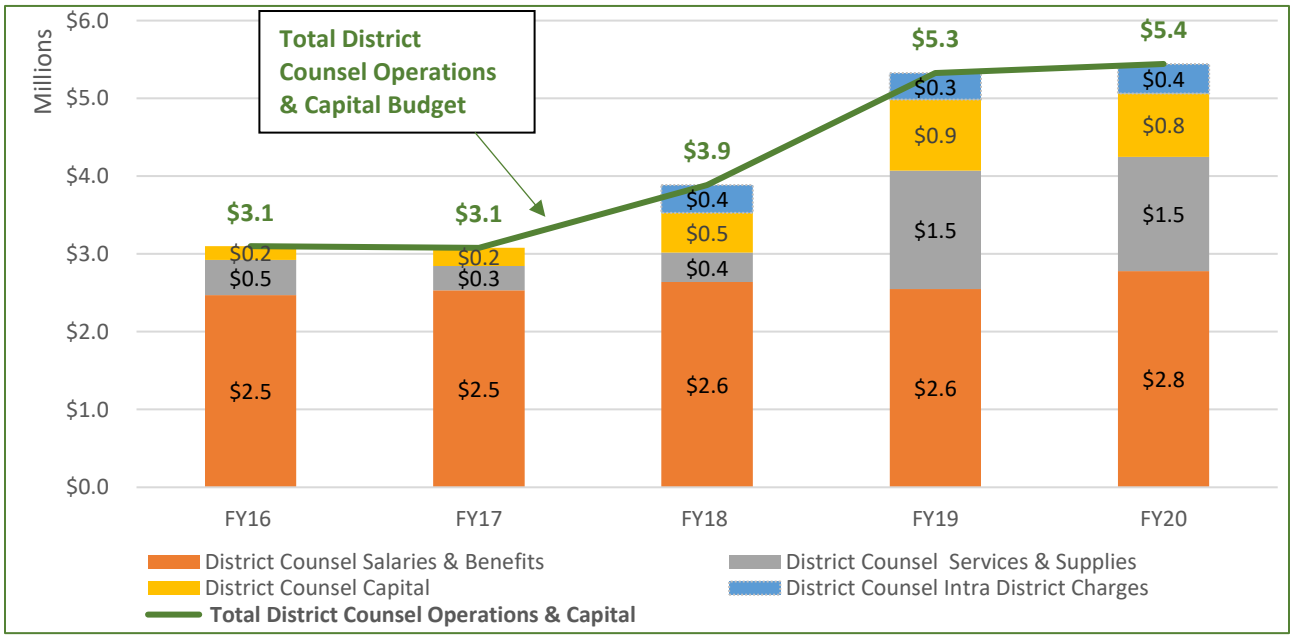

Source: Valley Water Budget Documents, http://www.aqua.gov/archived-budget-documents-prior-years

For the Risk Management Unit within the District Counsel's Office, the operating budget increased modestly by nine percent between FYs 2016 and 2020, as shown in Figure 3.

[5] Valley Water's total FY 2019 budget is $529 million, and the Five-Year Capital Improvement Program includes 67 projects totaling $6.5 billion.

The budgets for salaries & benefits for both the District Counsel's Office and the Risk Management Unit remained steady since FY 2016.

Figure 3. Risk Management Unit Budget, FY 2016 to 2020

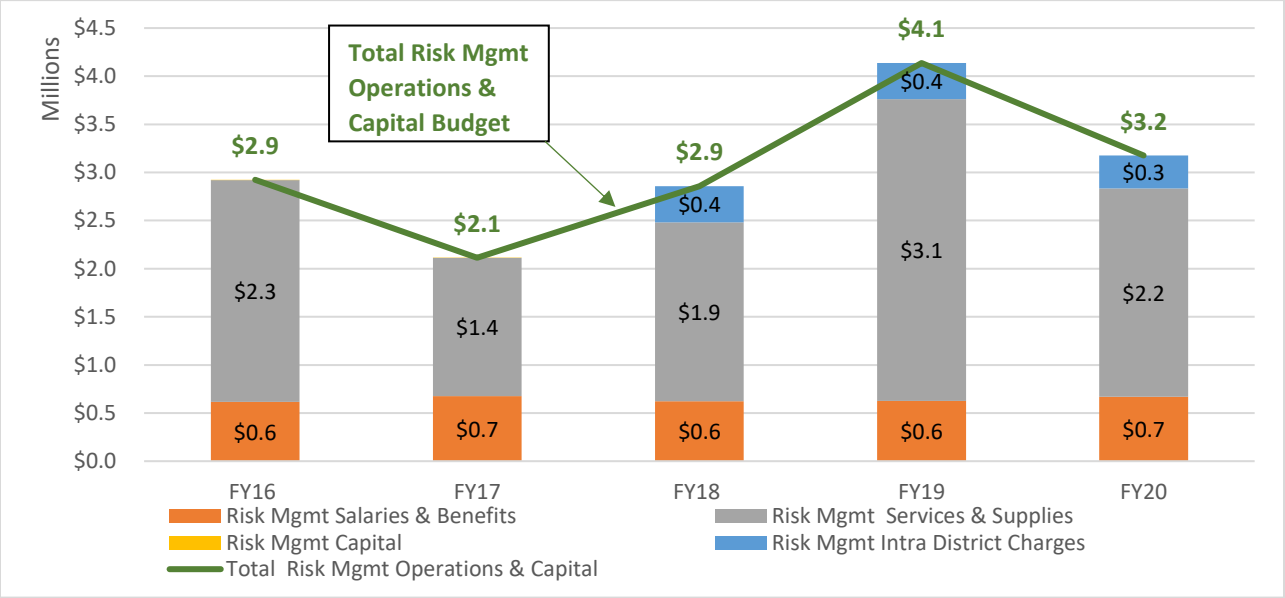

Source: Valley Water Budget Documents, http://www.aqua.gov/archived-budget-documents-prior-years

Specifically, the number of budgeted positions in the District Counsel's Office and the Risk Management Unit did not change throughout the period, as shown in Figure 4.

Figure 4. District Counsel's Office and Risk Management Unit Budgeted Positions, FY 2016 to 2020

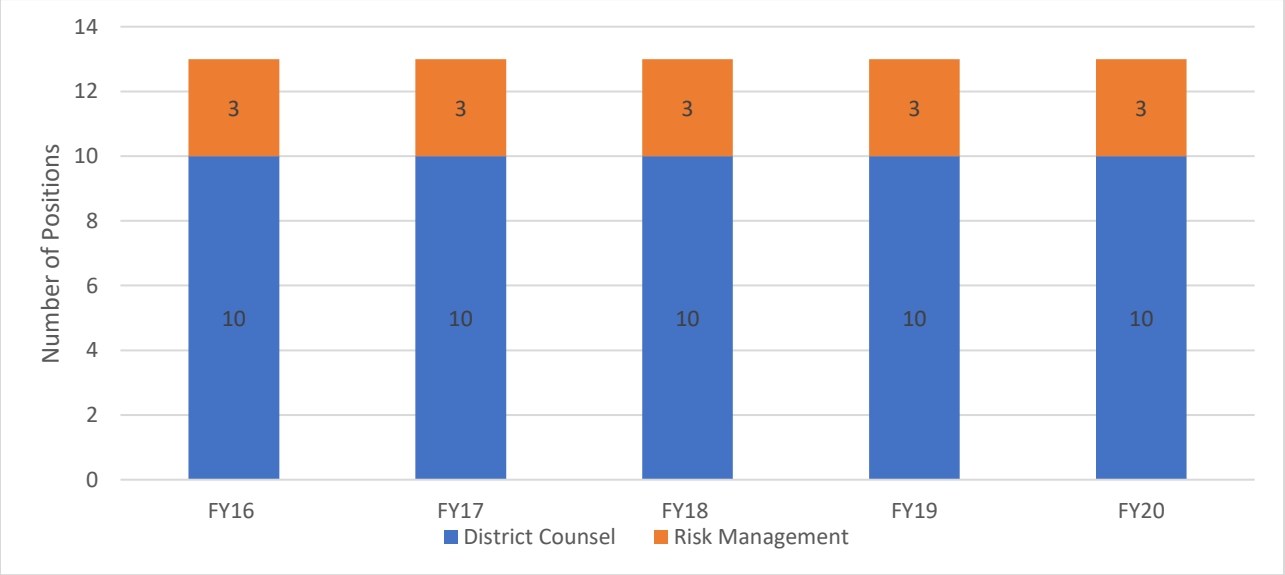

Source: Valley Water Budget Documents, http://www.aqua.gov/archived-budget-documents-prior-years

Methodology

How was the Performance Audit Conducted?

This performance audit assessed potential opportunities for structural, organizational, and procedural improvements in the District Counsel's Office. The audit examined the functions, structure, roles and responsibilities, and customer satisfaction of the District Counsel's Office's legal services to the Board and Valley Water management and staff in the operational and administrative units.

Audit Objective

In 2018, Valley Water's Auditor conducted an enterprise-wide audit risk assessment and identified the District Counsel's Office as an area that could benefit from further review. Our specific audit objective was to determine and identify potential structural, organizational, and procedural improvements.

Scope of Work

This specific audit examined the following areas:

- Roles and responsibilities of the District Counsel's Office.
- Valley Water Administrative Policies and other policies related to services provided by the District Counsel's Office.
- District Counsel's Office management structure and staff assignments.
- Customer service satisfaction and feedback.
- District Counsel's Office work processes, including:
    - Performance metrics and service levels
    - Time tracking and reporting
    - Succession planning
    - Contracting and use of outside legal firms (subject matter experts)
    - Use and maintenance of contract and agreement templates
    - Legal review of documents (contracts, agreements, amendments, etc.)
    - Use of NDAs
    - Use of District software systems
    - Information sharing and communications

The scope of the work did not assess whether legal documents and communications to the Board were properly classified because the District Counsel did not release these documents due to their privileged and/or confidential nature. This assessment is included on the annual audit work plan of the Auditor.

The scope of work also did not examine the efficiency of claims administration and management by the Risk Management Unit, which is also included on the annual audit work plan of the Auditor.

Finally, this audit did not include an assessment of any individual employee performance or a comparison of timeliness metrics with other peer agencies due to the absence of available data.

Project Approach

To address the audit objective, the Auditor performed the following activities:

- Analyzed the District Counsel's Office Manual for areas of enhancement, such as the use of risk-based criteria, communication protocols, training, and e-discovery procedures.
- Evaluated the Valley Water organizational charts and budget documents.
- Assessed available contract and agreement templates to determine the different types available and their last revision dates.
- Analyzed 23 recent selected records from the Consultant Agreement System (CAS)[6] to determine the work performed by District Counsel attorneys for the review and approval of consulting agreements, and the types of edits made by attorneys.
- Computed turnaround times for the length of the review process for 23 consultant agreements.
- Reviewed the District Counsel's Office folder log-in sheets to evaluate the approval process.
- Interviewed all District Counsel staff to:
    - Discuss job functions and primary service areas.
    - Assess workflow processes between the District Counsel's Office and internal customers.
    - Identify performance metrics for the Office.
    - Identify areas of possible improvement.
- Interviewed each member of the Board to assess:
    - Satisfaction with District Counsel's Office services and timeliness.
    - Processes for information sharing and transparency.
    - Use of outside attorneys and subject matter experts.
    - Succession planning and staff assignments.
- Interviewed 17 District management and staff in the following 12 Valley Water operational and administrative offices, divisions, and units.
    - Clerk of the Board
    - Office of Talent and Inclusion
    - Dam Safety and Capital Delivery
    - Watersheds Design and Construction

[6] CAS is Valley Water's in-house system for processing consulting agreements.

- Watersheds Stewardship and Planning
- Water Utility Capital
- Raw Water
- Water Supply
- Treated Water
- Information Technology and Administrative Services
- General Services
- Purchasing and Consultant Contracts Services

The purpose of the interviews was to:

- Determine the level of satisfaction with the District Counsel's Office services.
- Assess workflow processes with the District Counsel's Office.
- Evaluate communication protocols.
- Identify areas of concern and possible improvement.

- Conducted a peer review of public legal offices to identify and compare structure and management practices. Five agencies were contacted – City of San Jose, Santa Clara Valley Transportation Authority (VTA), Metropolitan Water District of Southern California (MWD), San Diego County Water Agency, and East Bay Municipal Utility District (EBMUD). Two of these agencies agreed to provide additional information beyond what was contained on their website. Other information was obtained through the publicly available budget and financial documents. Other agencies were researched to respond to audit committee requests for information.

Assessment of the Reliability of Data

Section 9.2 of generally accepted government auditing standards require auditors to describe limitations or uncertainties with the reliability or validity of evidence if: (1) the evidence is significant to the findings and conclusions within the context of the audit objectives; and (2) such disclosure is necessary to avoid misleading the report users about the findings and conclusions.

The District Counsel's Office does not routinely capture operating and workload data. In the absence of data related to consultant agreements, the Auditor collected and performed its analysis of CAS data and found it minimally adequate for the audit wherein a judgmental selection of recent consultant agreements from CAS was reviewed for comments, edits, and timeliness. As CAS only records the processing and review of consultant agreements and not construction contracts, procurement purchases,[7] or other documentation reviews, the results of our analysis cannot be projected to the entirety of the District Counsel's work.

Assessment of Internal Controls

Section 9.20 of generally accepted government auditing standards require auditors to assess the adequacy of internal controls if they are significant to the audit's objectives. The objectives of

[7] Supplies, equipment, software, etc.

this performance audit did not require an internal control assessment, but policies and procedures and other controls were reviewed to identify potential improvements.

Audit Statement

This audit is known as a performance audit. A performance audit evaluates the economy, efficiency, and effectiveness of programs, services, and operations. The Auditor conducted this performance audit per generally accepted government auditing standards. Those standards require that the audit be planned and performed to obtain sufficient evidence to provide a reasonable basis for the findings and conclusions based on the audit objectives. The Auditor believes that the evidence obtained provides a reasonable basis for the findings and conclusions based on the audit objectives. A preliminary technical draft for review of its technical accuracy and a formal draft report for a response to formal recommendations were provided to the District Counsel's Office. Comments were incorporated as applicable throughout the report. [See Appendix A for the summary of agency comments to the recommendations included in this report and Appendix B for the full agency response.]

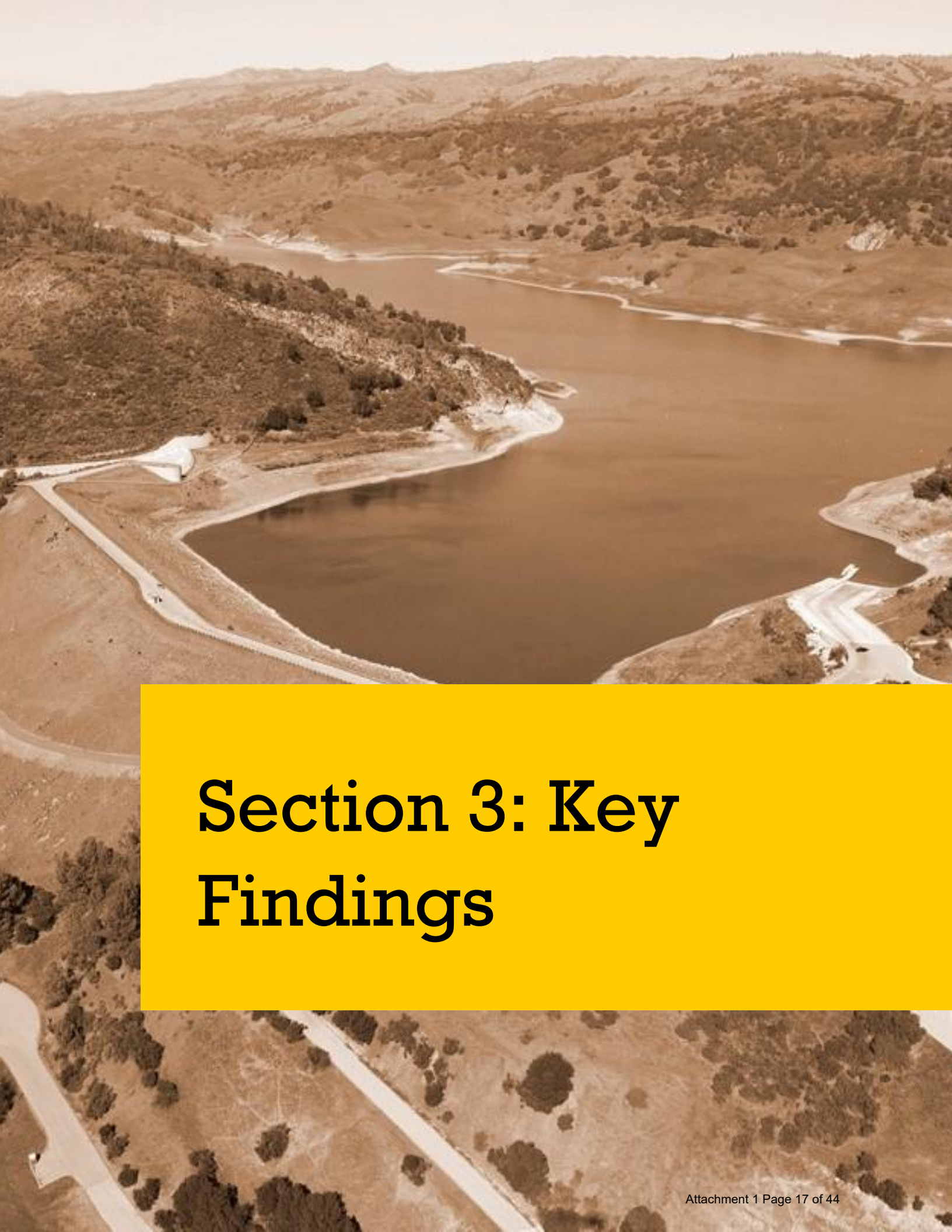

Section 3: Key Findings

Finding 1: Customer Satisfaction is Mixed

Customers report high satisfaction with the quality of services

One standard performance measure to gauge operational performance is customer satisfaction. Nearly all the Board's Directors (six of seven) and most of the managers (10 of 14) across 12 operational and administrative units we interviewed, highly rated the quality of services provided by the District Counsel's Office. Staff from Human Resources, and those working on California Environmental Quality Act (CEQA), Fish and Aquatic Habitat Collaboration Effort (FAHCE), and water rights generally reported the highest satisfaction levels with the quality of service while Administrative Services reported being the least satisfied.

Valley Water managers want better communication on the status of services requested

Eleven of 12 operational and administrative offices, divisions, and units were not as satisfied with communication activities by the District Counsel's Office. Our review found that the District Counsel's Office does not routinely provide regular status updates to Valley Water managers and staff about work requests. Communication strategies varied through ad-hoc (sometimes prompted, other times unprompted) verbal or email updates. Valley Water managers said the frequency and the quality of District Counsel Office communication is highly dependent upon individual attorneys; some were particularly good at updating them on the status of the work, while others said that communication seldom occurs unless there was direct outreach. District Counsel staff reported varying level of awareness about these communication concerns with some reporting being unaware that Valley Water operational and administrative units had communication concerns.[8]

Valley Water managers want faster service

Eleven of the 12 operational and administrative offices, divisions, and units were also not as satisfied with timeliness by the District Counsel's Office. Valley Water managers and staff described multiple examples of service delivery with capital projects, real estate acquisitions, and other types of services that were delayed due to legal attorney review that took longer than expected to complete. While there is not an agreed-upon standard for timeliness, the turnaround times for legal review of 23 recent

[8] The District Counsel submits a quarterly report to the Board of Directors, which serves as the only formal mechanism for status reporting, but the District Counsel said that this report does not include the status of individual work requests by Valley Water units.

professional service agreements ranged from 1 to 49 calendar days, averaging 17 calendar days.[9] Consulting agreements outside of our sample of 23 agreements took between four months to over a year for final review and approvals. District Counsel attorneys said they were unaware of management's concerns regarding timeliness. Other attorneys said they were aware of these concerns and described their proactive communication efforts.

Valley Water and District Counsel's Office share responsibility for timeliness issues

Valley Water departments, divisions, and units and the District Counsel's Office described different circumstances for longer than expected turnaround times. Nine of 12 Valley Water operational and administrative offices, divisions, and units attributed the delays to two key areas. First, Valley Water managers reported that the reviewing attorney would require the use of a different contract template, although the managers believed they were using the correct template for their needs; some of them unknowingly used an outdated template because the District Counsel attorneys did not place the updated template on the Valley Water intranet. As shown in Figure 5 below, 32 percent of 190 legal review comments requested clarification or definition and another 12 percent commented on the use of non-standard contract language or incorrect templates among the consultant agreements. Second, Valley Water managers reported that delays occur when District Counsel attorneys request changes to the scopes of work, question costs and business-related decisions, as well as editing and format changes, including to documents that have been previously edited, rather than only focusing on legal or regulatory concerns. Figure 5 shows that 19 percent of legal comments addressed formatting suggestions or line edits, equating to about one in five comments. For example, the District Counsel's Office attorneys corrected and commented on "typos" or noted that Valley Water units used an incorrect format to describe a list of tasks in the scope of work. District Counsel attorneys explained that many of their editing comments are necessary to help avoid future litigation. Contracts and Procurement staff explained that final review and verification of requested changes impact original processing schedules, creating bottlenecks, especially when multiple reviews occur.

Figure 5. Types of District Counsel's Office Comments on Professional Services Agreements (Sample of 23)

Type of Comment by the District Counsel Reviewer	Percent of Total
Needs clarification or definition	32%
Use of non-standard contract language, incorrect template/version	12%
Formatting suggestion or line edit	19%
Missing or incomplete element	13%
Extraneous or redundant materials; should be deleted or removed	9%

[9] The results of the professional services agreements reviewed cannot be projected to the full population of documents reviewed by the District Counsel's Office. CAS only contains consultant agreements and no other types of documents reviewed by the District Counsel's Office.

Flawed logical or inconsistent requirements	7%
Incorrect information	6%
Other	2%
Grand Total (190 First Review Comments)	**100%**

Source of data: Auditor Analysis

District Counsel staff attributed timeliness concerns to multiple issues, such as project managers submitting documentation that was not properly prepared, contracts that were improperly modified, or use of incorrect templates. The District Counsel attributes timeliness issues to insufficient staffing levels.

The Auditor verified that some timeliness concerns are due to the quality of documents submitted to the District Counsel's Office for review that could have benefitted from line editing. Other timeliness concerns stem from applying the same level of attorney review for each professional services agreement regardless of the nature of or complexity of the proposed work. In other public agencies legal offices, application of risk-based management principals guide the level of review based on the evaluation of risk exposure. District Counsel attorneys verified that the same level of review was performed even when some agreements may have low risk of future litigation. A District Counsel attorney explained that each attorney has their own philosophy in reviewing contracts, and the philosophy of the Office is to protect Valley Water from potential litigation.

Contracting delays have a financial impact. Actual costs could not be determined because of the unavailability of data to perform a cost analysis.[10] Valley Water managers prepared a memo about five years ago, requesting authority to outsource legal services when needed to help prevent project delays. Under Valley Water Board Governance Policy EL-5, District Counsel has the authority to procure outside legal services when internal resources cannot efficiently meet organizational needs, provided the District Counsel informs the Board immediately of the procurement.[11] [12] While the Auditor did not have available information to assess District Counsel procurement decisions, the District Counsel explained that outsourcing decisions are based on his discretion.[13] The Auditor noted that the District Counsel does not have formal written decision-making criteria for these procurement decisions.

[10] A cost analysis would consider the amount of time spent reviewing contracts integrated with other data on project schedule delays due to contracting delays.

[11] Valley Water's Purchasing and Consultant Contracts Services Unit is not involved in these procurements or with ensuring compliance with procurement requirements.

[12] In FY 2018 the District Counsel's Office budgeted $1.1 million for outside legal services and by FY 2020, budgeted $2.5 million.

[13] The District Counsel explained that he considers the availability of attorneys and the specialized expertise available.

Finding 2: Updating the District Counsel's Office's Operating Model Can Enhance Customer Satisfaction

The District Counsel's Office can benefit from an enhanced operating model consistent with best practices to address service delivery issues such as timeliness, communication, and non-uniform approaches to providing services. The District's Chief Counsel explained that the Office's operating model is individual-centric in that each attorney determines how best to provide services. While this type of individual-centric operating model is not uncommon among public sector legal departments, others have more mature operating models to help sustain a consistent level of services. We describe potential strategies below that are designed to enhance service delivery.

Added policy and procedure development

Policies and procedures serve as one key element of effective governance by forming the basis for an organization's internal control system. In other words, policies and procedures help promote operational efficiency and effectiveness. The District Counsel's Office manual covers general areas of operations such as:

- Mission statement,
- Roles and responsibilities,
- Administrative policies,
- Office procedures, and
- Board communications.

Added procedural development could facilitate uniformity and transparency in decision-making and service delivery. Areas that need to be addressed in policies and procedures include:

- Development of risk-based criteria for reviewing consultant agreements, purchase acquisitions, and/or other types of contracts.
- Development of criteria for prioritization and assignment of Board and Valley Water requests for services.
- Preparation (sources of information to be used) and maintenance of the Quarterly Report provided to the Board[14] and the Litigation Matrix used to document current litigation status, which is part of the Quarterly Report.
- Clarification of EL 7.5 regarding the handling of Board member requests for the drafting of resolutions.

[14] Governance Policy EL 7.11 provides direction on the information the District Counsel will communicate to the Board but does not constitute an office policy and procedure which would guide the development, format, timing, and review of the Board's quarterly report.

- Maintenance of the Legal Advice Matrix used to document the communication of advice provided to Valley Water management and staff.
- Personnel training requirements, including cross-training and succession planning.[15]
- E-discovery procedures (currently in development).
- Criteria for risk management decision-making applicable to insurance requirements.[16]

Early District Counsel participation in planning activities

There is not a policy or criteria that requires District Counsel or other support unit involvement for projects that are new to Valley Water, complex in design, or will likely have significant costs (E.g., over $100 million). The District Counsel's Office is not involved in the review process during the development of requests for proposal or bids (which typically includes sample contract language) unless specifically requested by project management. The Auditor's review of 23 consultant agreements showed that 32 percent of comments involved requests for clarifications and definition, as shown in Table 5. These legal comments might have been prevented had the District Counsel's Office been involved earlier in the planning process. District Counsel attorneys reported that the first time they might see a request for proposal or contract is in the Legistar system when it needs to be reviewed just before Board review and/or approval. District Counsel attorneys said that they have previously advocated for early involvement in the planning process without success. However, another attorney said that it should be the project manager's and COO's decision to determine the need for early legal counsel involvement. Valley Water management has recently taken proactive steps on the Anderson Dam retrofit project to include District Counsel's Office participation in project planning meetings. Attorneys involved in these early planning meetings reported benefits from early risk assessment and proactive legal research.

Risk Management can also become involved earlier in the project planning process to help identify project risks and contractor insurance requirements, rather than consult at the project manager's discretion later in the project or during the contract negotiation phase. Efficient and effective project planning requires all stakeholders' participation and involvement so that any project issues can be identified and addressed as early in the process as possible

Added document template development

A standard practice in government purchasing is the development and maintenance of template documents that can be used for different procurements. The templates contain standard language for terms and conditions and formatting designed to address different contracting needs. If used effectively, the templates can minimize the time required to review contracts. While the Valley Water District Counsel's Office attorneys reported

[15] Training on succession planning would convey the importance of the three designated staff that could potentially assume the leadership position to receive requisite knowledge transfer.

[16] Presently, decisions can vary. Risk management staff acknowledged that some vendors had raised questions about the level of insurance required of them for activities that do not have a material risk to the agency.

having developed a standard set of templates, they also stated that Valley Water units often do not use the correct templates, resulting in extra legal review work of contracts and agreements, as previously described in Figure 5. Valley Water operational and administrative unit management stated that even though standard templates or templates from previously approved contracts or agreements are used, the District Counsel attorneys will edit the document language depending on the type of procurement or use the review and approval process to update the standard language.

Additional contract template development is needed to address all the types of services outsourced by Valley Water, such as for accounting/audit, staff support, marketing, other professional services, or different types of construction-related contracts. Valley Water management reported if a current template does not meet their needs, they will copy and paste language from other available contracts. With additional standard templates, Valley Water divisions and units could potentially minimize delays and frustration with the agreement and contract review process.

District Counsel and Valley Water management disagree over ownership for updating and maintaining the templates for contracts, amendments, and agreements. Most of the templates for standard consulting agreements available on Valley Water's intranet had not been revised since the calendar years 2016 and 2017. The last known agreement to be updated was the Capital Consultant Contracts Standard Consultant Agreement in 2018. District Counsel attorneys explained they are responsible for the review and approval of legal agreements; Government Relations is responsible for identifying necessary updates resulting from changes in California and federal legislation, and General Services is responsible for making the required legal changes to the documents. The General Services Purchasing Unit management, on the other hand, said it is not their responsibility because they do not have the legal expertise to make those types of changes.

Valley Water's Administrative Policy AD-6.3, "Approval Authority for Consultant Services Contracts," assigns responsibility to District Counsel to "develop, review and/or approve all standardized and customized contracts." The District Counsel explained this excludes the updates due to changes in laws.[17] The absence of formally defining the responsible party has led to inefficiencies in the contracting process. For example, a 2019 change in California law regarding small business enterprise preference in public construction contracts should have prompted a revision to Valley Water's templates. At the time of our review, the template had not been updated, even though District Counsel noted the need for a change in January 2020. In this instance, the general services unit had to repeat the request for proposal preparation process.

[17] Implementation of AD 6.3 language is not included in the job description for the District Counsel likely contributing to the ambiguity of ownership. The District Counsel job description does state, however, that the District Counsel "monitors legal developments, including proposed legislation and court decisions related to water agency law and activities; evaluates their impact on District operations and recommends appropriate action." The job description language would reasonably include legislative and regulatory changes that affect contracting language in contract and agreement templates.

The District Counsel explained that the Office does not have the resources or time to monitor and identify the legal changes. Greater clarity about the responsible party to update contract templates could prevent the risk of undermining the integrity of the procurement process.

Workflow management processes and software

High performing organizations use software applications to receive, track, and monitor services requests. The District Counsel's Office uses three Valley Water electronic systems to help track workflow for some of its activities. The CAS and Legistar[18] software applications alert the District Counsel's Office when documents require review; limitations in these systems do not allow the District Counsel's Office to examine the overall number of assignments, staff assigned to them, and the status of the review. Historically, the District Counsel's Office did have a work request system, but its use was discontinued years ago, according to the District Counsel, because it could no longer be supported technically. The third system – the Risk Management Information System (RMIS) – is used by the Risk Management Unit to manage claims. At the time of our review, Risk Management staff had a backlog of claims to enter, preventing real-time analysis of all current claims.

In the absence of robust workflow management software applications, the Auditor examined how workflow is currently managed. First, in the area of assigning work requests, the District Counsel's Office utilizes general guidelines. For example, one attorney is generally responsible for imported water and litigation, while another is responsible for environmental law. Generally, one attorney is assigned to one or more key areas with another attorney serving as a backup. The key issue with these guidelines is that any attorney could be assigned to work on requests by the Board, which are given top priority thereby delaying the completion of work requested by operational and administrative units. Valley Water staff explained they may or may not be informed of deliverable delays, resulting in dissatisfaction with the timeliness of legal services and creating uncertainty on overall project timelines.[19] One option that other public agencies have used is to have one or two specific attorneys dedicated to servicing Board requests and attending standing committee meetings while other attorneys would be dedicated to servicing specific divisions and units.

Second, in the area of managing work requests, the District Counsel's Office primarily relies on several manual processes to collect, manage, and track all other work requests. For instance, to track hardcopy documents requiring signatures, the District Counsel uses a manual paper log to record dates the documents are received, assigned, and completed. The workflow of other documents, such as construction contracts being prepared before bid or submittal through Legistar, are reviewed by District Counsel attorneys outside of either of these electronic workflow systems. A comprehensive electronic workflow application would better manage work requests by recording submittal and completion dates for all types of documents allowing the monitoring

[18] Legistar is Valley Water's electronic system for processing documents being submitted to the Board of Directors.
[19] Due to the lack of quantifiable information collected on workflow and turnaround times, the exact impact of delays due to the re-prioritization of work due to Board requests is not known.

of the status of work requests by external customers. Having this information could also aid District Counsel management in continuous process improvements.

Use of service level agreements

Best practices in service delivery between public agency departments encourage the use of SLAs.[20] SLAs define the services to be delivered by one department to another and helps reduce ambiguity in inter departmental service support levels. For example, an SLA for contract reviews between the District Counsel's Office and an operational unit would address:

- Agreed-upon completion dates for service
- Expectations for document quality prior to submission for legal review
- Scope of services to be provided (e.g. line editing and or legal risk)
- Communication protocols (e.g. frequency and content)

Expectation setting afforded by SLAs could improve timeliness. The absence of defined work performance expectations is a contributing factor for lower levels of customer satisfaction. District Counsel staff explained that the preparation of SLAs might be too time-consuming.[21]

Better timekeeping system

Effective time tracking is a fundamental activity of all public agencies to ensure proper accountability and use of public funds. Timekeeping software applications are used in legal offices in both the public and private sectors, which allow a standard way to assess operating efficiency. The Office of the District Counsel has a time tracking application, but it is not configured to capture the type of data needed to perform staffing and financial analysis.[22] The District Counsel and attorneys provided various reasons for why they should not change how they track their time, such as:

- Staff maintain informal records for personal reference.
- The District Counsel's Office is a support service and should not be asked to track their time differently than other support departments.
- Providing privileged and confidential information about how their time is spent on activities to their customers could be problematic. In the private sector, time activity reports are classified as "privileged and confidential" to prevent the sharing of information to unintended parties.
- The Office's budget is not determined by time input.
- The Board has not asked the Office to formally track their hours.

[20] Other examples of agencies include Los Angeles County, Sacramento County, City of San Diego, Sacramento City Unified School District, California Department of Justice, and the University of California Merced.

[21] The District Counsel's Office would need to consider if SLAs should be used for long term and/or short-term assignments.

[22] District Counsel staff currently record regular earning hours and leave time only.

The District Counsel added that time tracking would not likely result in increased funding to the Office, but staff has reported providing time records at the request of operations for invoicing purposes. The last verified instance of the reimbursement of attorney time was in February 2017. Comprehensive time tracking by the District Counsel's Office could potentially identify other reimbursement opportunities as well as provide the ability to effectively assign attorney workloads and right-size staffing levels.[23]

Management of non-disclosure agreements

NDAs are an important legal structure used to protect information from being made available by the recipient of that information and are considered a legal contract. A party in breach of an NDA may be subject to legal action commensurate with the value of information. Like other public agencies, Valley Water sends and receives NDAs.

Standard management practices would, at a minimum, establish a standardized policy on the management and administration of NDAs, including defining roles and responsibilities for their compliance. A process to support the management of NDAs includes centralized maintenance, document tracking, compliance monitoring, and reporting. At the time of our review, Valley Water did not have a process for managing NDAs. Without a process, Valley Water does not know how many NDAs are in place, their nature, the signatory responsible for their compliance, or whether the District Counsel's Office has reviewed all of them. The District Counsel's Office said they are in the process of developing a formal policy for NDA management and administration. A target date has not been established for its completion.

Use of master services agreements

Many public agencies use master services agreements[24] to implement public outreach that procures legal services for a wide range of subject matter and demonstrates conformance to public procurement requirements, including allowing for consistent and timely acquisition of services when needs arise. A master services agreement would involve developing a list of pre-vetted firms through a request for qualifications process to develop a master services agreement for all eligible firms. School districts, cities, counties, transit districts, water agencies, and retirement systems across California have issued bids to hire multiple legal firms to provide services.[25] The District Counsel explained that all the legal needs cannot be anticipated, defined, and incorporated into a master services agreement and that some type of "carve-out" will be

[23] In our peer review of agencies, the MWD tracks legal time for multiple reasons – regular and reimbursable time – and the City of San Jose track attorney time for budgetary, litigation and program tracking . Examples of other agencies that track legal time include the Colusa County Counsel and the City of Sacramento.

[24] Competitive bid contract that establishes a list of pre-qualified and approved firms for a selected set of services.

[25] In our peer review of agencies, the MWD uses a master services agreement for specialized legal services. The San Jose City Attorney's Office is required to adhere to the same general purchasing requirements as other departments or offices. Other examples of agencies outside of our peer review that have bids soliciting multiple firms to contract legal services include the Los Angeles County Employee Retirement Association, Sonoma County, Paramount School District, Los Angeles Metropolitan Transportation Authority, the County of Ventura, the Los Angeles Unified School District, Azusa Unified School District, South Orange County Community College District, and the California State Treasurer's Office.

needed for emergency procurements. The District Counsel added that Valley Water is unlikely to realize cost savings because the pool of available firms with water rights experience is very small and too specialized to have standard rates. Finally, the District Counsel also expressed concern about the limitations in the firms that can be retained due to possible conflicts of interest and their providing representation for an opposing legal party. A master services agreement is designed to have a broad reach, to provide a range of hourly costs, and to identify all eligible local, regional, and national firms that can avoid having these types of conflict of interest issues.

Use of added performance measures

Widely used in the public sector, regardless of the department's mission, performance measurement is the process of collecting, evaluating, and reporting information that can provide management with a quantifiable operational assessment of efficiency and effectiveness. The District Counsel's Office uses one formal performance measurement – the submission of Quarterly Reports as the sole performance metric for operational performance.[26]

Other performance measures can be developed, such as turnaround times and volumes of documents, projects, or cases reviewed, which help Valley Water identify and correct possible process bottlenecks. District Counsel staff raised concern, however, that tracking performance measures could adversely influence attorneys' decision-making so that organizational performance could look more favorable. An effective set of performance measures would address this concern by including qualitative and quantitative metrics to assess tangible and intangible benefits from service delivery.

Use of a multi-source assessments

The District Counsel also raised concern that Valley Water's Board Appointed Officer (BAO) Performance Evaluation Procedure, Document Number Q622D02[27], already establishes the agreed upon evaluation criteria for assessing the District Counsel's performance. The Auditor identified that the purpose of the document is to guide the Board in assessing BAO employee performance, which is different from implementing performance management principles to guide day-to-day managerial decision-making based on routine operational performance measurement.

A best practice in assessing operational effectiveness is to collect and evaluate feedback from stakeholders that provide or receive services from an office or unit. Implementation of a multi-

[26] These quarterly reports are prepared manually by the District Counsel's Office because the Office does not have available off-the-shelf software applications that could generate these reports electronically. The labor costs involved in manual preparation is unknown because of the absence of utilizing time tracking systems. Organizational performance measurement/management software is widely available or simple database development of key performance measures could be developed in house based on any number of performance measurement frameworks, such as the Balanced Score Card approach or a Results Based Management Framework.

[27] The criteria is limited to the Board's annual evaluation of individual BAO performance related to Leadership, Strategic Planning, Customer/Partner Focus Monitoring Organizational Performance, Workforce Focus, Financial, Communication and Support to the Board, and Business Results.

source assessment is an effective and anonymous tool that supports a culture of continuous process improvement.

Receiving and providing feedback (on an annual basis) between the District Counsel's Office and its customers could allow the Office to be aware of the services and areas that need improvement, as evidenced by some attorneys reporting that they were unaware of the communication issues between the District Counsel's Office and the Valley Water divisions and units.

The District Counsel said that a multi-source assessment might pose potential legal conflicts with the Board Governance Policy II. Section 3.2 of the Board BAO Linkage asserts that "The Board, as a whole, will not evaluate, either formally or informally, any employee other than the BAOs". Section 5.5 of the policy further states,

> "Monitoring of each BAO's job performance will be against the expected BAO job output: accomplishment of the duties for which he/she is accountable to the Board, and performance within the applicable limitations established by the Board. The monitoring shall occur through a review of the reports submitted by the BAO in accordance with the Board Appointed Officer Performance Evaluation procedure."

The District Counsel explained that the policy and the District Counsel's employment agreement would require an amendment to include implementation of a multi-source assessment and could be done provided these amendments occur in the future. The Auditor's analysis determined that the Board policy and employment agreement were designed for individual employee performance evaluation and did not prohibit the District Counsel's Office from implementing best management practices that monitor operational performance.

Other Issues: Realigning the Risk Management Unit Needs Further Study

A clearly defined organizational structure, including well developed roles and responsibilities influence accountability, transparency, fairness, and responsibility. The results of our peer agency review showed that the risk management function was placed under administrative departments - variously reporting to the Deputy General Manager, the Directors of Finance, Human Resources, or Administrative Services, but ultimately reporting to the organization's CEO.[28]

In contrast, Valley Water's Risk Management Unit is placed under the Office of the District Counsel, reporting directly to the District Counsel who reports to the Board as previously discussed in this report. Valley Water's Risk Management Unit includes the Workers' Compensation program and risk retention (self-insurance), and risk transfer (insurance)

[28] City of San Jose, VTA, MWD, San Diego County Water Agency, EBMUD.

program.[29] The Auditor's analysis showed that the activities of the Workers' Compensation program, such as claims processing administration and reporting, could organizationally move to the Environmental, Health, and Safety Unit. Combining these two units would integrate and centralize business processes for the prevention of accidents and management of claims should accidents occur.[30] The analysis also showed that the CEO does not have a formal role in establishing the Risk Management Unit's goals and objectives or in the monitoring of its performance.

The Valley Water Risk Manager explained that the risk management function is structured under the District Counsel's Office to better review claims and contracts, provide easier access for legal coordination, and that the Workers' Compensation program should remain under his unit because of shared expertise among staff. In contrast, the Procurement and Contracts Manager reported that better efficiencies could be accomplished through consolidation with their office because separating the insurance coverage function has led to confusion and frustration among vendors. Further study would be needed on organizational restructuring given that standard business practices show that executive management, such as the CEO, should be responsible and held accountable for risk management and control processes.

[29] The mission of the Risk Management Program Unit is to protect assets by identifying and evaluating loss exposures and applying effective risk management techniques to reduce or eliminate risk. Specifically, the unit is tasked with the management of Valley Water's Workers' Compensation program and risk retention (self-insurance) and risk transfer (insurance) programs to cost-effectively maximize coverage and to comply with the Board Governance policies. The Risk Management Unit, currently staffed by a Risk Manager and Management Analyst II, and a Program Administrator of the Workers' Compensation program, was transitioned to the District Counsel's Office in 2007 from the Chief Administrative Office (now the Information Technology & Administrative Services Office). Between July 2017 and March 2020, Risk Management processed approximately 208 settlements totaling approximately $828K.

[30] The program is housed under the Risk Management Unit as a separate function staffed by one Program Administrator.

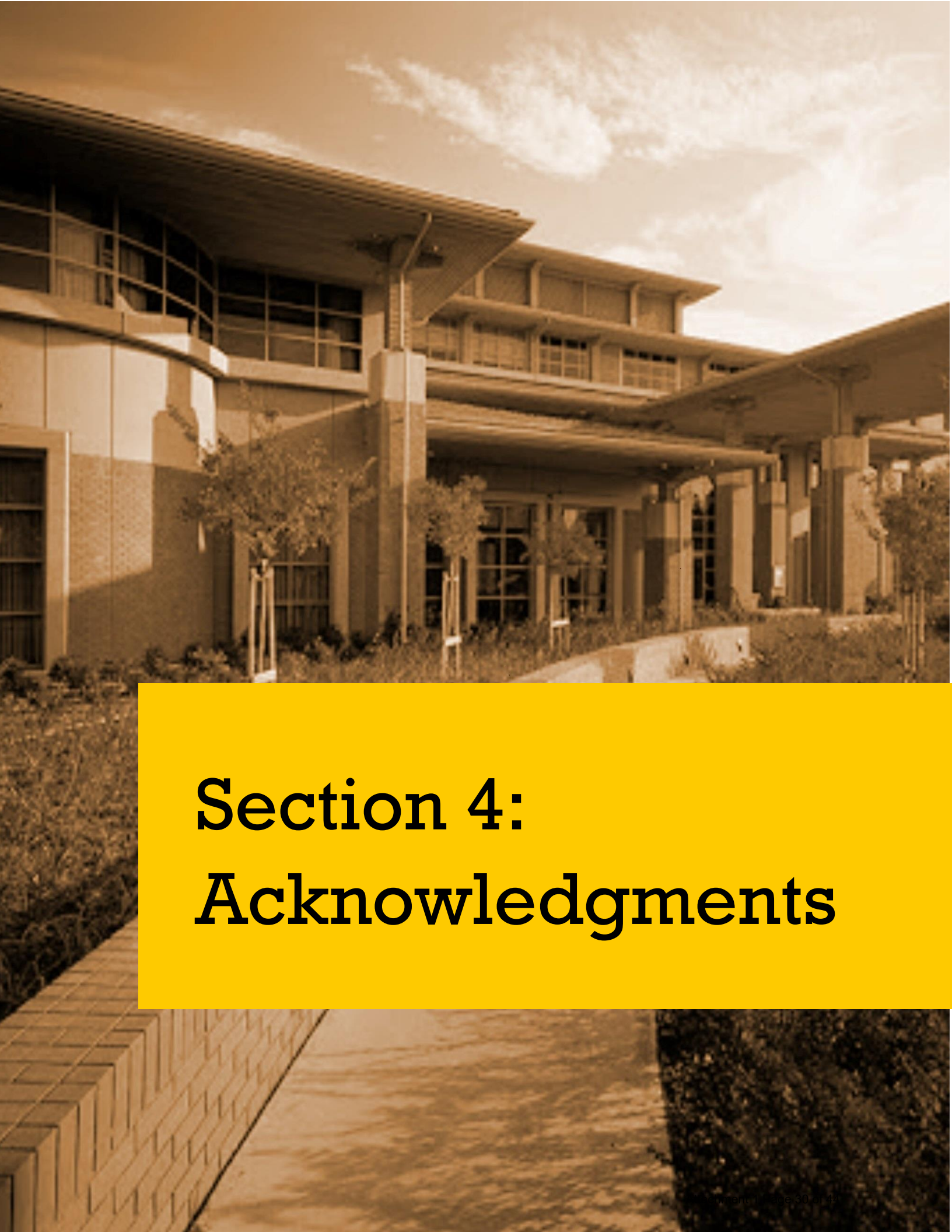

Section 4: Acknowledgments

ACKNOWLEDGMENTS

TAP International wishes to thank the staff who participated in this audit from the following divisions and units:

- Office of the District Counsel and Risk Management
- Clerk of the Board
- Office of Talent and Inclusion
- Dam Safety and Capital Delivery
- Watersheds Design and Construction
- Watersheds Stewardship and Planning
- Water Utility Capital
- Raw Water
- Water Supply
- Treated Water
- Information Technology and Administrative Services
- General Services
- The Board of Directors

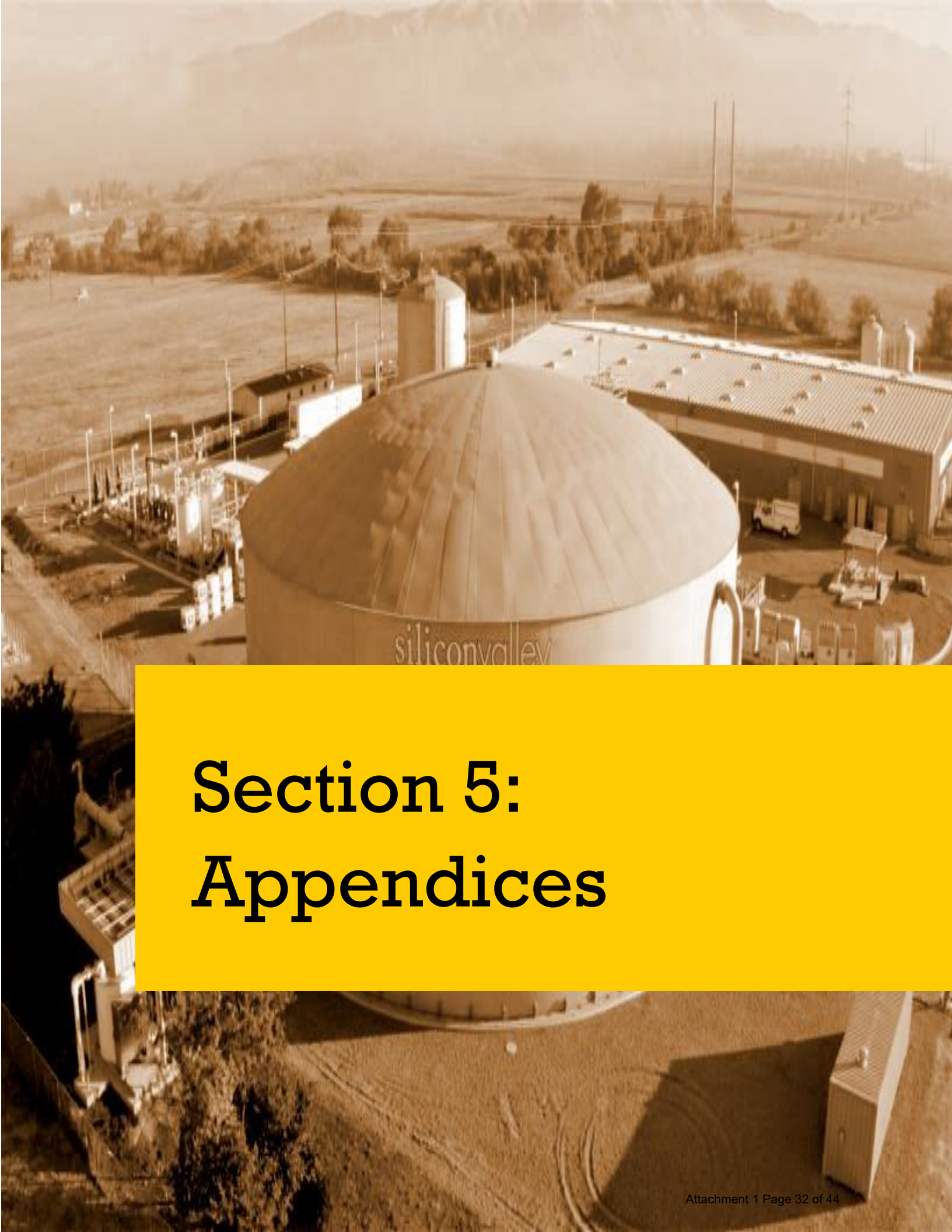

Section 5: Appendices

APPENDIX A – Summary of Agency Responses

RECOMMENDATION #1 - The District Counsel's Office should develop and implement a written strategy for approval by the Board that provides an updated operating model for efficient service delivery. In the development of the strategy, the District Counsel can consider, for example, enhanced policy and procedure development and new/enhanced tools described throughout this report. These tools, for example, can include workflow management, SLAs, added performance measurement, use of multi-source feedback assessments, and risk-based criteria assessments.	
SUMMARY OF MANAGEMENT RESPONSE: **Management agrees with the recommendation.** The District Counsel agrees to develop and implement a written strategy with an updated operating model for efficient service delivery for approval by the Board. The District Counsel further commented on the many suggested solutions included in the audit report, describing the varied potential benefits or concerns. **Target Implementation**: The District Counsel recommends that implementation should await appointment of a successor District Counsel so that he or she can have critical input on the ultimate strategy proposed for the office. With respect to implementation of a future written strategy, it is suggested that the Board consider this as a goal for the successor District Counsel. Direction is requested from the Board of Directors if it would like the strategy to be developed prior to the appointment of a successor District Counsel.	**INDEPENDENT AUDITOR RESPONSE** TAP International agrees that the development and implementation of the updated operating strategy should await appointment of a successor District Counsel because of the need for organizational and operational changes to address the issues described in the audit report. Although TAP International did not formally recommend implementation of the multiple potential solutions described in the audit report, the solutions suggested are standard management practices to address the District Counsel's Office's service delivery issues that were identified by the audit (such as timeliness, communication, and non-uniform approaches to providing services). TAP International opted against prescribing the use of these tools to provide management flexibility to tailor or adopt alternative solutions as part of an updated operating model. The current District Counsel in describing concerns with a suggested solution contained in the audit report, such as the development of criteria for risk management unit decision-making, dedicating staff to serve the Board only, and tracking attorney time, has the flexibility to implement other alternative strategies that could enhance Office performance and accountability.

RECOMMENDATION #2 - The District Counsel and the Information Technology & Administrative Services Chief Operating Officer should update Valley Water Administrative Policies that (1) identify areas that require the development of new contractual and agreement templates, and (2) identify the responsible party for updating existing contract, agreement, and amendment templates as well as non-disclosure agreements (NDAs). These updates should also include the responsible party for NDA monitoring.	
SUMMARY OF MANAGEMENT RESPONSE: **Management agrees with the recommendation.** The District Counsel reported that efforts to develop an administrative policy to address non-disclosure agreement are underway with an expected completion date of April 2021 or earlier. **Target Implementation**: July 1, 2021.	**INDEPENDENT AUDITOR RESPONSE**: TAP International commends District Counsel initiation of activities to address this recommendation.

RECOMMENDATION #3 - The District Counsel should convene a workgroup on planning activities or projects involving contracting opportunities with key stakeholders (E.g., Chief Executive Officer (CEO) and Chief Operating Officers (COOs)) to develop a decision-making guide for early engagement with the District Counsel Office and Risk Management.	
SUMMARY OF MANAGEMENT RESPONSE: **Management agrees with the recommendation.** District Counsel agrees that early involvement by the District Counsel's Office and Risk Management on complex, high-value, or large-scale Valley Water projects that will involve contracts would generally be beneficial. While there have been recent efforts to include the District Counsel's Office in the early planning processes for some projects (e.g., the Anderson Dam Retrofit Project), more consistency would be beneficial. This consistency can be increased through the development of the recommended decision-making guide and its use by the CEO and Chief Operating Officers since they are the ones who will be aware of future projects and project needs. The District Counsel is happy to attempt to convene the recommended workgroup and hopes the other BAOs and Valley Water's Chief Operating Officers and Chief Financial Officer will support and participate in the workgroup. **Target Implementation**: May 1, 2021. Unless different direction is received from the Board of Directors, the District Counsel does not believe that implementation of this recommendation needs to wait upon the appointment of a successor District Counsel.	**INDEPENDENT AUDITOR RESPONSE**: TAP International commends District Counsel initiation of activities to address this recommendation.

RECOMMENDATION #4 - The District Counsel should discuss with the Board the use of a master services agreement to add another procurement mechanism for legal services.	
SUMMARY OF MANAGEMENT RESPONSE: Management agrees with the recommendation The District Counsel requested that in the event the Board determines that a master services agreement should be used to procure legal services in the future, it should continue to be allowed to retain legal services separately from master services agreements in cases where there is a need for legal services that cannot be fulfilled, or cannot be best fulfilled, by firms on the list of pre-vetted firms, or there is insufficient time to use a competitive process to secure a new firm. **Target Implementation**: To be determined.	**INDEPENDENT AUDITOR RESPONSE**: TAP International commends the District Counsel for initiating discussions with the Board about the use of alternative contracting mechanisms. The District Counsel noted concerns about retaining its authority to sole source legal services, but the purpose of the recommendation is to add to the procurement strategies versus eliminating them.

RECOMMENDATION #5 - The Board Audit Committee should ensure that the scope of the audit currently proposed in the annual audit work plan for the risk management function, include an evaluation of the advantages and disadvantages of implementing alternative organizational alignments for the Risk Management Unit and the Workers' Compensation programs.	
SUMMARY OF MANAGEMENT RESPONSE: **Not applicable for a management response.** The District Counsel commented on this recommendation and argued against organizational changes describing that Workers' Compensation activities should not be consolidated under Environmental, Health and Safety because claims administration of the Workers' Compensation program is more closely aligned with Risk Management.	**INDEPENDENT AUDITOR RESPONSE**: This recommendation was made to the Board Audit Committee. The audit report describes the issues that were raised that support further study of a potential organizational change. Should the Audit Committee wish to expand the scope of the current risk management audit listed on the annual work, the arguments presented by the District Counsel will be considered.

APPENDIX B – Full Agency Response to Recommendations

MEMORANDUM

TO: Tap International, Inc. **FROM**: Stanly Yamamoto

SUBJECT: District Counsel Audit Response

District Counsel Audit Response

The following represents the District Counsel's response to the five recommendations in the TAP International (TAP) draft audit report: District Counsel's Office Can Benefit From Enhanced Structure And Improved Management Processes. A justification is presented with any response where the District Counsel is not in agreement. Because the current District Counsel, Stanly Yamamoto, has announced his retirement effective May 3, 2021, no targeted implementation date is included for some of the recommendations. Direction is needed from Valley Water's Board of Directors regarding whether implementation should be targeted prior to May 2021 or whether it should await appointment of a successor District Counsel. Where that direction is needed, the targeted implementation dates below have been designated as "To be determined." The Board may also consider utilizing the audit as a tool for evaluating candidates and subsequently collaborating with the successor District Counsel in any implementation program.

Finally, it should be noted that where implementation of a recommendation will involve creation or modification of Board Governance Policies, Administrative Policies, or Work Instructions, final approval of the same does not rest with the District Counsel.

Recommendations

1. The District Counsel should develop and implement a written strategy for approval by the Board that provides an updated operating model for efficient service delivery. In the development of the strategy, the District Counsel can consider, for example, enhanced policy and procedure development[1] and new/enhanced tools described throughout this report. These tools, for example, can include workflow management, SLAs, added performance measurement, use of 360-degree type of reviews, and risk-based criteria assessments.

   District Counsel Response: The District Counsel agrees with the overall recommendation to develop and implement a written strategy with an updated operating model for efficient service delivery for approval by the Board but disagrees (in whole or in part) with some of the identified elements suggested for inclusion in such a strategy where noted below.

---

[1] -Development of risk-based criteria for reviewing consultant agreements, purchase acquisitions, and/or other types of contracts.
-Development of criteria for prioritization and assignment of Board and Valley Water requests for services.
-Preparation (sources of information to be used) and maintenance of the Quarterly Report provided to the Board and the Litigation Matrix used to document current litigation status, which is part of the Quarterly Report.
-Clarification of EL 7.5 regarding the handling of Board member requests for the drafting of resolutions.
-Maintenance of the Legal Advice Matrix used to document the communication of advice provided to Valley Water management and staff.
-Personnel training requirements, including cross-training and succession planning
-E-discovery procedures (currently in development).
-Criteria for risk management decision-making applicable to insurance.

First, with respect to the targeted implementation date, the District Counsel recommends that this should await appointment of a successor District Counsel so that he or she can have critical input on the ultimate strategy proposed for the office. With respect to implementation of a future written strategy, it is suggested that the Board consider this as a goal for the successor District Counsel. Direction is requested from the Board of Directors if it would like the strategy to be developed prior to the appointment of a successor District Counsel.

a. Enhanced Policy and Procedure Development

i. Development of risk-based criteria for reviewing consultant agreements, purchase acquisitions, and/or other types of contracts

While Risk Management agrees that some form of documentation would be helpful to create transparency as to the rationale behind the assignment of insurance requirements, that documentation must be based solely on risk factors, such as liability to Valley Water, and whether the contractor will have access to the Water's computer infrastructure.

The point of the risk management process is to assess the risk and assign insurance requirements appropriate to the risk, not based on arbitrary factors such as the size of the contract or other non-risk related factors. Size of contract and risk are not necessarily related. For example, an architect may redesign a home including placing a huge 18-foot-long I-bar between the first and second floors to ensure the second floor was supported. The cost of the architect's services is approximately $10,000. Using the size of the contract as a determining factor, the amount of insurance required from the architect would be minimal. However, using a risk-based approach would dictate higher limits. In this case, if her design was wrong and if the I-bar had collapsed the damages could be catastrophic.

Other factors, such as whether the contract is essential, available alternatives, etc. are more business decision factors, and should be considered if the contractor takes exception to the insurance or other standard requirements. These factors can be used to evaluate whether a contractor can be relieved of the established requirements if requested.

ii. Development of Criteria for Prioritization and assignment of Board and Valley Water requests for service

The District Counsel agrees that the development of such formal written criteria would be useful. Input regarding what criteria should be used can also be solicited from the successor District Counsel and from the Board at a future workshop.

iii. Clarification of EL 7.5 regarding the handling of Board member requests for the drafting of resolutions

Direction will be needed from the Board regarding what, if any changes, are needed to the Governance Policies. EL-7.5 requires Board Appointed Officers (BAOs) to deal with the Board as a whole except when (a) fulfilling informal or oral individual requests for information or (b) responding to officers or committees duly charged by the Board. Drafting a resolution would not be a mere request for information. If the resolution was not requested by "officers or committees duly charged by the Board," it would fall outside of the authority of the existing EL-7.5. Further, Board Linkage 2.2 provides that "[a]ny Board member requests that require substantive work should come to the Board for direction."

To the extent that the requested resolution required substantive work by District Counsel staff, to do this work would require approval of the whole Board under the current policy. Input on

how these policies should be changed can be obtained from the entire Board at a future Board meeting or Board workshop. The Board can give direction on whether this should precede appointment of a successor District Counsel or if it should wait until after the appointment of the same. It is recommended, however, that this wait until after the appointment of a successor District Counsel so that he or she can provide input on the potential policy changes to the Board.

iv. Maintenance of the Legal Advice Matrix used to document the communication of advice provided to Valley Water management and staff.

District Counsel agrees that a formal policy regarding maintenance of the Legal Advice Matrix can be developed. It is recommended that this await appointment of a successor District Counsel. The Board should also consider using this recommendation as a tool for evaluating candidates for the District Counsel position (e.g., as the foundation for an interview question).

v. Personnel training requirements, including cross-training and succession planning.

District Counsel agrees that a formal policy regarding personnel training requirements can be developed, however it should be noted that staff work plans often include cross-training requirements such as the Administrative Assistant with the Executive Assistant and those efforts are consistently ongoing. It is recommended that the formal policy await appointment of a successor District Counsel. The Board should also consider using this recommendation as a tool for evaluating candidates for the District Counsel position (e.g., as the foundation for an interview question).

vi. E-discovery procedures.

As noted in the audit report, these procedures are currently in development.

vii. Criteria for risk management decision-making applicable to insurance.

Please see the response to section (i.) above.

b. Effective Workflow Management

District Counsel agrees that the use of a comprehensive electronic workflow application could be beneficial with respect to improving efficiency, and the future strategy to be presented to the Board may include this as a component. It is recommended that the final selection of such a program await appointment of the new District Counsel. However, earlier inquiries can be made regarding the types of programs on the market, their features, and their compatibility with Valley Water's current systems. Gathering this preliminary information may help facilitate development of the future strategy. The Board should also consider using this recommendation as a tool for evaluating candidates for the District Counsel position (e.g., as the foundation for an interview question).

Within the discussion on workflow management, the auditor sets forth an organizational option where one or two specific attorneys would be dedicated to servicing Board requests and attending standing committee meetings while other attorneys would be dedicated to servicing specific divisions and units. District Counsel does not recommend such an option for inclusion in the future strategy given the sheer number of committee meetings at Valley Water and, more importantly, the working knowledge of the underlying projects needed to be able to respond to many inquiries, often in real time. Often the attorneys working with staff on projects are in the best position to be able to answer detailed questions from the Board members. If the responsibility for Board inquiries was delegated to a single attorney, in order to answer many questions, he or she would likely need to make inquiries of the attorneys working with staff in any event, which would delay the response time and would still leave the responding attorney with less information than the appropriate responding attorney.

Dedicating one or two attorneys to servicing Board requests and attending committee meetings would also result in fewer attorneys being primarily responsible for the day-to-day work with staff. This may also result in the most experienced attorney in a subject area being unable to handle an assignment due to his or her dedication to Board requests and Committee meetings. Given the current size of the District Counsel's Office, this approach could prove to be problematic.

c. Service Level Agreements

District Counsel agrees that Service Level Agreements (SLAs) can be developed for use with some units and projects *where appropriate*. The development of the SLA program would be in conjunction with development of the overall strategy for efficient service delivery to be submitted for Board approval. This strategy would include under what circumstances SLAs should be utilized, the process under which they are entered into, and what their standard terms should include. Rather than a formal contract to be signed by two parties, the SLAs would be set out as documents setting forth formal expectations and assurances in order to increase common understanding by District Counsel staff and their respective clients. The Board may also wish to use this recommendation as a tool for evaluating candidates for the District Counsel position (e.g., as the foundation for an interview question).

In the audit report's description of a potential SLA for contract reviews, it is noted that the SLA would address agreed-upon completion dates. District Counsel notes that any meaningful estimate for the time to complete a legal review assignment would not be feasible without a review and thorough understanding of the assignment and all of its inherent elements. Accordingly, rather than arbitrarily identifying a specific timeline for completion of legal review assignments, most SLAs would likely need to allow some flexibility and perhaps include a process by which the assigned attorney would review and understand the assignment and issues presented before providing an estimated completion date for an assignment. This is the type of process that would be further defined in the future strategy for efficient service delivery to be developed and submitted for Board approval.

Finally, since the SLAs would be a component of the strategy for efficient service delivery, District Counsel recommends that targeted implementation follow appointment of a successor District Counsel. Prior to that time, District Counsel can implement standard communication protocols to be used by legal counsel to keep clients apprised of the status of outstanding legal assignments.

Note: Board Audit Committee members requested that TAP provide information as which public entities have currently implemented and are administering SLAs.

d. Better Timekeeping System

District Counsel acknowledges that where there is an opportunity for Valley Water to recover funds for the time legal counsel works on matters, their time should be accurately tracked and recorded.

For matters *not* involving a potential recovery of costs/fees, District Counsel is open to evaluating the potential use of timekeeping in the context of a future electronic workflow application. The actual features and functions of any electronic workflow application ultimately selected will determine what types of activities can be tracked and how efficiently they can be tracked. Defining these factors will allow the successor District Counsel to make a fully informed recommendation regarding what, if any, attorney activities should be regularly tracked by time, how such time tracking should be documented, and how the results should be utilized. The Board may also wish to use this recommendation as a tool for evaluating candidates for the District Counsel position (e.g., as the foundation for an interview question).

Any inclusion of timekeeping in the future strategy would need to be tailored to serve an objective purpose and need (for example, an identified need to capture time spent on specific projects or types

of assignments). In addition, whether or how to use such timekeeping would consider the time needed to capture such records weighed against the perceived benefit of obtaining the time records. For example, if attorneys (such as those in private practice) had to track time for *each and every* task performed over the course of a day (answering phone calls, reading emails, writing emails, answering short questions, attending meetings, etc.), even with the use of software an undue amount of time would be consumed in this exercise every week (easily more than one hour each work day), which would have the cumulative impact of leaving significantly less time to perform actual legal work each week. While the intended outcome of the audit is to increase efficiency, tracking time for *all* daily activities would have the opposite effect of creating inefficiency given the reduced amount of time available to perform legal work.

In addition, depending upon their required level of detail, the timekeeping records could be strictly confidential attorney-client communications and available for review by the District Counsel alone. A modified version might be made available for external revenue-generating purposes.

The audit report suggests that the use of comprehensive time tracking could potentially identify other reimbursement opportunities as well as provide the ability to effectively assign attorney workloads and right-size staffing levels. While it is true that where there is an actual opportunity for reimbursement, the time records must have been captured in order to submit the reimbursement request or motion for fees, the reality is that these reimbursement opportunities are extremely rare in practice. For purposes of reimbursement, the more efficient practice would be to identify those reimbursement opportunities at the outset and perform more robust timekeeping in only those cases. The future strategy for enhanced service delivery will need to determine what, if any, time records would be useful to evaluate attorney workloads and staffing levels. That defined need should determine the scope of any timekeeping.

NOTE: The Board Audit Committee members requested information from TAP as to which public agencies are currently using timekeeping systems. District Counsel requests that TAP's response clarify the purposes for such timekeeping by those agencies. For example, is it only done for revenue-generating or recovery purposes?

e. <u>Use of Added Performance Measures</u>

District Counsel is not opposed to identifying and utilizing additional performance measures in conjunction with an electronic workflow application. The features and functions of that workflow software may determine what additional performance measures make sense for inclusion in a future strategy for enhanced service delivery. However, it is recommended that the development and use of new performance measures await appointment of the successor District Counsel.

f. <u>Use of a 360-Degree Type of Review</u>

District Counsel is not opposed to the use of regular (annual) feedback from clients as a tool to better monitor operational performance of the office as a whole and to identify any problems or concerns facing the office. This feedback would not be utilized for individual personnel evaluations but would instead be used as a tool by the District Counsel to assess overall office performance. The future strategy for enhanced service delivery would need to define the scope and features of this program. It is recommended that the development and use of this review await appointment of a successor District Counsel.

NOTE: The Board Audit Committee members requested that TAP provide additional information defining this terminology (360-degree review) as it is a term of art and advise as to which other public agency in-house legal offices are using such reviews.

Targeted Implementation of Recommendation 1: To be determined.

2. The District Counsel and the Information Technology & Administrative Services Chief Operating Officer should update Valley Water Administrative Policies that (1) identify areas that require the development of new contractual and agreement templates, and (2) identify the responsible party for updating existing contract, agreement, and amendment templates as well as non-disclosure agreements (NDAs). These updates should also include the responsible party for NDA monitoring.

District Counsel Response: The District Counsel agrees with this recommendation.

The recommendation is to work with the Information Technology & Administrative Services Chief Operating Officer to update Valley Water *administrative policies* relating to contract templates and responsible parties in the contracting process. These would be the administrative policies for which this Chief or her reports are the designated 'owners.'

As to the first part of the recommendation (updating an administrative policy that identifies *areas* that require the development of new contractual and agreement templates), the District Counsel presumes that the intent is for the development of an administrative policy which lays out a clear *process* for regularly identifying any needed contract templates or template updates.

As to the development of an administrative policy regarding NDAs, the District Counsel notes that this effort has already commenced and should be completed by April 2021 or earlier. The Board Audit Committee has requested an opportunity to review the proposed administrative policy and provide any feedback. A proposed policy will be scheduled for a future Board Audit Committee agenda, and any input from the Committee will be considered before the policy is formally adopted.

Targeted Implementation of Recommendation 2: July 1, 2021.

3. The District Counsel should convene a workgroup on planning activities or projects involving contracting opportunities with key stakeholders (E.g., Chief Executive Officer (CEO) and Chief Operating Officers (COOs)) to develop a decision-making guide for early engagement with the District Counsel Office and Risk Management.

District Counsel Response: The District Counsel agrees with this recommendation.

District Counsel agrees that early involvement by the District Counsel's Office and Risk Management on complex, high-value, or large-scale Valley Water projects that will involve contracts would generally be beneficial. While there have been recent efforts to include the District Counsel's Office in the early planning processes for some projects (e.g., the Anderson Dam Retrofit Project), more consistency would be beneficial. This consistency can be increased through the development of the recommended decision-making guide and its use by the CEO and Chief Operating Officers since they are the ones who will be aware of future projects and project needs. The District Counsel is happy to attempt to convene the recommended workgroup and hopes the other BAOs and Valley Water's Chief Operating Officers and Chief Financial Officer will support and participate in the workgroup.

Unless different direction is received from the Board of Directors, the District Counsel does not believe that implementation of this recommendation needs to wait upon the appointment of a successor District Counsel.

Targeted Implementation for Recommendation 3: May 1, 2021.

4. The District Counsel should discuss with the Board the use of a master services agreement to add another procurement mechanism for legal services.

   District Counsel Response: The District Counsel has no objection to this recommendation.

   The recommendation is for the District Counsel to *discuss* with the Board the use of a master services agreement to add another procurement mechanism for legal services. District Counsel has no objection to obtaining the Board's views on this issue through such a discussion. The Board may also consider using this recommendation as a tool for evaluating candidates for the District Counsel position (e.g., as an interview question).

   Currently, the District Counsel's Office does not typically use a competitive procurement process to retain outside legal counsel, and such counsel are selected based upon a number of considerations including experience and expertise. A competitive process has been used to select counsel in the past for certain projects or ongoing programs. For example, the District Counsel used a competitive process to select law firms to provide legal services for workers' compensation litigation and for recycled water infrastructure procurement (i.e., design-build and P3).

   The Board's own Governance Policy (EL-5.3.9) exempts payments for legal services from the competitive procurement process. In order to ensure flexibility and the ability to timely retain the best counsel for any given need, District Counsel recommends that the Board maintain the current Governance Policy provision to be utilized with formal written standards for the selection of outside counsel to be developed by the District Counsel and maintained with the office's formal policies.

   In the event that the Board determines that a master services agreement should be used to procure legal services in the future, District Counsel recommends that it be allowed to retain legal services separately from master services agreements in cases where there is a need for legal services that cannot be fulfilled, or cannot be best fulfilled, by firms on the list of pre-vetted firms, or there is insufficient time to use a competitive process to secure a new firm.

   The need for some types of legal services and expertise is foreseeable and can be incorporated in a request for qualifications. However, it is impossible to anticipate all such future needs and some needs will only be occasional and periodic, such as unique investigations requiring specific expertise. For example, there may be a need for legal counsel with a particular expertise in an esoteric area of law or hired for a particular strategic reason due to a pending, unanticipated political matter. Further, it is possible that pre-vetted firms may no longer be suitable for a particular assignment due to lack of availability, recent public controversy, retirement or loss of attorneys in the desired practice areas, etc. Where this occurs, there may be a need to fill a legal need on short notice. Having to go through a formal procurement process may prevent the District Counsel's office from retaining new counsel in time to address a given need. Consequently, any such program (and modification of the related Governance Policies) should retain an exception as described above.

   Note: The Board Audit Committee members requested TAP provide information as to how other local agencies are currently procuring outside counsel services; if Master Service Agreements have been implemented; and for what types of services.

   Targeted Implementation for Recommendation 4: To be determined.

5. The Board Audit Committee should ensure that the scope of the audit currently proposed in the annual audit work plan for the risk management function, include an evaluation of the advantages and disadvantages of implementing alternative organizational alignments for the Risk Management Unit and the Workers' Compensation programs.

District Counsel Response: The District Counsel disagrees with this recommendation.

When determining the scope of the future audit for the risk management function, Management requests that the Board Audit Committee consider the following:

Risk Management takes exception to the recommendation that Workers Compensation ("WC") should be moved from Risk Management to the Environmental Health and Safety Unit ("EHS"). This recommendation appears to be based on a fundamental misconception as to the primary function of the Workers' Compensation unit. The report states that moving Workers' Compensation to EHS will "place the Workers' Compensation program in a unit most closely aligned with their function and allow for a more streamlined reporting and performance feedback structure, rather than reporting to a business unit that reports directly to the Board," yet the function of WC is never discussed.

The essential function of the WC unit is claims administration. The WC unit intakes employee claims of injury, reports them to the third-party administrator, assists the injured worker throughout the lifetime of the claim, and generally manages the workers' claim from beginning to end. The Workers Compensation Administrator is responsible for interacting with, and managing, the Third-Party Claims administrator, again, a claims function, as well as dealing with state claim agencies, etc. Investigation into the cause of the accident is not an essential function of the unit. The investigation into the cause of the injury is necessarily handled by the EHS unit. While the Workers Compensation Administrator assists in the investigation and uses the information for the claims, this investigation is a separate function from WC.

The essential function of the WC unit is closely aligned with that of the Risk Management Unit. One of the essential functions of the Risk Management Unit is also claims. In this particular organization, the Risk Manager has more than 20 years' experience overseeing WC claims. EHS does not handle claims.

The District Counsel reserves the right to make further comments on this issue if and when it is included in a future audit of the risk management function.

Targeted Implementation for Recommendation 5: N/A.

/s/ Electronically Approved
Stanly Yamamoto
District Counsel

cc: Darin Taylor

Santa Clara Valley Water District

File No.: 21-0070

Agenda Date: 1/26/2021
Item No.: *4.4.

BOARD AGENDA MEMORANDUM

SUBJECT:
Consider the January 13, 2021 Board Audit Committee Recommendation to Add Evaluation of the Risk Management Function's Organizational Alignment to the Planned Risk Management Audit, at an Estimated Cost Range of $101,600 to $199,750.

RECOMMENDATION:
Approve the January 13, 2021 Board Audit Committee Recommendation to Add Evaluation of the Risk Management Function's Organizational Alignment to the Planned Risk Management Audit, at an Estimated Cost Range of $101,600 to $199,750.

SUMMARY:
At the December 16, 2020 Board Audit Committee (BAC) meeting, the BAC reviewed and discussed the District Counsel Audit Final Report. Recommendation #5 from the District Counsel Audit provides that: "The Board Audit Committee should ensure that the scope of the audit currently proposed in the annual audit work plan for the risk management function, include an evaluation of the advantages and disadvantages of implementing alternative organizational alignments for the Risk Management Unit and the Workers' Compensation programs."

At the January 13, 2021 Board Audit Committee meeting, the BAC discussed options to evaluate Risk Management organizational alignment. The BAC recommends that an additional objective (i.e. to evaluate the organizational alignment of the Risk Management function) be added to the planned Risk Management audit. The Risk Management audit is the next audit in queue in the Annual Audit Work Plan (Attachment 1). Upon Board approval, the Annual Audit Work Plan would be updated to note that the Risk Management audit (Audit ID 4) will include an organizational alignment analysis. The estimated time frame to perform this audit ranges from 9-15 months, and the estimated cost ranges from $101,600 - $199,750.

FINANCIAL IMPACT:
There are adequate funds in the Office of Chief Financial Officer's Board-adopted FY 2020-2021 budget, Project 60131014, Continual Improvement.

CEQA:

The recommended action does not constitute a project under CEQA because it does not have the potential for resulting in direct or reasonably foreseeable indirect physical change in the environment.

ATTACHMENTS:
Attachment 1: Annual Audit Work Plan

UNCLASSIFIED MANAGER:
Darin Taylor, 408-630-3068

2019

Santa Clara Valley Water District Annual Audit Work Plan, FY 18/19 to FY 20/21.

DRAFT AUDIT WORK PLAN – OCTOBER 13, 2020

SANTA CLARA VALLEY WATER DISTRICT BOARD OF DIRECTORS DRAFT ANNUAL WORK PLAN, FY 18/19 TO FY 20/21

OVERVIEW

The selection of audits is an important responsibility of the Audit Committee. The formulation of this audit work began in 2018 when the Valley Water's Board of Director provided input and approved the enterprise risk assessment that was administered across agency operations. The audit work plan is a culmination of a comprehensive effort to consider input on auditable areas from Valley Water employees, mid-level management, executive management, and Board Directors.

The proposed audit work plan considers factors that, if addressed, will provide opportunities to mitigate those risks and improve operations. These factors include:

- **Operational** – Are Valley Water programs/activities performed and services delivered in the most efficient, effective, and economical manner possible, and do they represent sound business decisions, including appropriate responses to changes in the business environment?
- **Financial** – Is there an opportunity to improve how Valley Water manages, invests, spends, and accounts for its financial resources?
- **Regulatory** – Do Valley Water programs and activities comply with applicable laws and regulations?
- **Health and Safety** – Are Valley Water services delivered in a manner that protects our residents and employees from unnecessary exposure to environmental factors?
- **Information Security** – Are Valley Water's information systems and networks protected against unauthorized access, use, disclosure, disruption, modification, inspection, recording, or destruction?

In addition, the proposed audit work plan considers several other factors in the selection of audits.

- **Relevance** – Does the audit have the potential to affect Board decision-making or impact Valley Water customers and residents?
- **Best Practices** – Does the audit provide the opportunity to compare current performance to best practices?
- **Return on Investment** – Does the audit have the potential for cost savings, cost avoidance, or revenue generation?
- **Improvement** – Does the audit have the potential to result in meaningful improvement in how Valley Water does its business?
- **Risk** - The audit work plan also considers risks related to major functions, as identified through a 2017 enterprise risk assessment conducted by TAP International.
- **Audit Frequency** – Individual Divisions at Valley Water should not be subject to more than two audits per year.

AUDIT WORK PLAN, FY 18/19 TO FY 20/21

This proposed audit work plan is divided into section. Section A describes ongoing non-audit (e.g. advisory) responsibilities of the Independent auditor and well as other quality assurance activities planned by executive management. Section B describes the audits planned for implementation by the Independent Auditor and other audits planned by Valley Water's executive management.

SECTION A

NON-AUDIT SERVICES AND SPECIAL PROJECTS

The following table lists non-audit services and special projects for the FY 2019-20 audit work plan:

Project	Scope	Planned Hours
Board of Director/Audit Committee Requests for Information	**Ongoing.** Should the Board of Directors request information on activities implemented by other public agencies or on other matters of interests applicable to enhancing the efficiency and effectiveness of operations, the independent auditor will collect and summarize information.	80
Audit Training	**Annual**. The Board Audit Committee Charter describes a requirement to provide audit training to BAC committee members at least annually.	2
Support services	**Ongoing.** Provide support services to Board Directors and Valley Water staff applicable to specific initiatives or planning projects to prevent potential service delivery risks, such as the planning of a new ERP system.	40
QEMS – Independent Auditor	**Ongoing.** Provide services to ensure proper oversight and accountability.	As needed
Management reviews	**Ongoing.** Valley Water 's CEO as needed will initiate internal quality assurance reviews of business practices and operations. These reviews are to be shared with the audit committee.	As needed

SECTION B: AUDIT SERVICES

AUDIT WORK PLAN – INDEPENDENT AUDITOR

FY 2018-19

The following audits have been approved in FY 2018-19 by the Board of Directors and will continue into the FY 2019-20 audit work plan.

ID	Audit	Audit Objectives	Planned Hours
1	District Counsel Office Review	Are there structural, organizational, and process improvement opportunities for the District Counsel's Office?	664
5	Contract Change Order Processing	What types of business process improvements are necessary for contract change order processing?	429
6	Real Estate Review	How can the Real Estate improve its financial and service delivery performance?	574
Total	3 audits		1,667

FY 2019-20

The following audits have been selected for approval for the FY 2019-20 audit work plan.

ID	Audit Name	Audit Objectives	Planned Hours	Factors Considered
	Ad-hoc Board Audits	TBD	500-800	Relevance
	Audit Follow up	Review and monitor the status of audit recommendations	120	Relevance
	Sub Total		**620-800**	
13	Construction project management	What areas of Valley Water's capital project budgeting practices can benefit from adopting best practices?	314-371	Financial Improvement Risk Best practices
2	SCADA audit*	Does Valley Water's Supervisory Control and Data Acquisition (SCADA) systems meet established SCADA security frameworks?	714-857	Information Security Relevance Improvement Risk
7	Permitting best practices	How does Valley Water's permitting process compare with other agencies? Can alternative permit processing activities benefit Valley Water?	171-229	Operational Best practices Improvement

4	Risk Management	Can risk management business processes be implemented more effectively? (i.e. contract claims, workers compensation, small claims).	143-260	Relevance Financial Operational Best practices
3	Billing and Collections audit	Are there opportunities to enhance Valley Water's billing and collection processes?	343-429	Relevance Financial Regulatory Improvement Risk Return on Investment
11	Accountability audit	Are there opportunities to enhance safe clean water audits?	115-171	Health and Safety Relevance Improvement
Sub Total	**5**		**1,800-2,317**	

*The SCADA audit (ID 2) will be deferred and reconsidered during the next Risk Assessment given the master planning efforts underway for Valley Water's SCADA systems.

FY 2020-21

The following audits have been selected for approval for the FY 2020-21 audit work plan.

ID	Audit Name	Audit Objectives	Planned Hours	Factors Considered
	Ad-hoc Board Audits**	TBD	500-800	Relevance
	Audit Follow up	Review and monitor the status of audit recommendations	120	Relevance
	Subtotal		**620-800**	
	Grants Management	Performance audit of the efficiency and effectiveness of grant management and administration	Outsourced-TBD	Financial improvement Operational Best practices
21	Community engagement	Can Valley Water benefit from updating its purchasing practices for multi-media, advertising, and other community engagement vendor related activities? What are the best practices in planning and facilitating community engagement?	417-543	Financial Improvement Operational Best practices

	Property Management	Is Valley Water implementing its encroachment licensing program consistent with the Board's guiding principles?	400	Operational
20	Homelessness analysis	How can the Valley Water enhance its homelessness encampment clean-up activities that protect health and safety?	290-371	Health and Safety Relevance Financial Operational
8	Classified information***	To what extent does the Valley Water's Counsel's office appropriately classify confidential information?	143-200	Relevance Operational
26	Local workforce hiring	What are the financial and service delivery disadvantages and advantages of RFPs that require preferences for local workforce hiring?	200-229	Operational
27	Equipment maintenance	Is Valley Water adequately meeting the needs of equipment maintenance?	143-229	Health and safety Operational Financial
33	Water Fix	What potential financial risks could occur on the California Water Fix project?	160-286	Financial Relevance
Sub Total	**8**		**1,125 -1,661**	

**Ad-Hoc Audits to be added to the Board performance plan upon identification and approval of reviews.

***This issue was included in the project plan for the performance audit of the District Counsel's office.

AUDIT WORK PLAN – VALLEY WATER RESPONSIBILITY

FY 18/19 THRU FY 19-20

QEMS

QUALITY ENVIRONMENTAL MANGEMENT SYSTEM INTERNAL AUDITS	
AUDIT DESCRIPTION AND UNIT #	
Treated Water O&M DOO: TW Survey (customer service w/ WS DOO)	*#515*
Laboratory Services Unit	#535
North Water Treatment Operations Unit	#565
South Water Treatment Operations Unit	#566
Treatment Plant Maintenance Unit (North & South WTP)	#555
Water Quality Unit	#525
Water Utility Capital Division	
Capital Program Planning and Analysis Unit	#335
Construction Services Unit	#351
Pipelines Project Delivery Unit	#385
East Side Project Delivery Unit	#375
West Side Project Delivery Unit	#376
Dam Safety & Capital Delivery Division	
CADD Services Unit	#366
Dam Safety Program & Project Delivery Unit	#595
Design and Construction Unit #3	#333
Pacheco Project Delivery Unit	#377
Water Supply Division DOO: TW Survey (customer service w/ TW O&M DOO)	*#415*
Wells & Water Measurement Unit	#475
Watersheds Design and Construction Division	
Design and Construction Unit #1	#331
Design and Construction Unit #2	#332
Design and Construction Unit #4	#334
Design and Construction Unit #5	#336
Land Surveying and Mapping Unit	#367
Real Estate Services Unit	#369
Associated Business Support Areas	
Facilities Management Unit	#887
Infrastructure Services Unit/IT	#735
Equipment Management Unit	#885
Business Support & Warehouse Unit	#775
Purchasing & Consultant Contracts Services Unit	#820

Emergency Services & Security	#219
Environmental, Health & Safety Unit	#916
Workforce Development (Training)	*#915*
Core ISO Procedures: Continual Improvement Unit	*#116*
Office of Communications (Customer Service)	*#172*
Office of the Clerk of the Board (Customer Service)	*#604*

Compliance and Financial Audits

FINANCIAL AUDITS
Financial Audits
Treasurer's Report
Appropriation's Limit
Compensation and Benefit Compliance (odd years)
Travel Expenses Reimbursement (even years)
Single Audit (if applicable)
WUE Fund Audit

Santa Clara Valley Water District

File No.: 20-1225

Agenda Date: 1/26/2021
Item No.: *4.5.

BOARD AGENDA MEMORANDUM

SUBJECT:
Consider the December 16, 2020, Board Audit Committee Recommendations to have TAP International, Inc. Conduct the Next Tri-annual Risk Assessment that is due by October 2021, prior to the Expiration on June 30, 2021 of the Board Independent Auditing Services Agreement with TAP International, Inc.; and to Direct Staff to Initiate a Procurement Process to Enter into a New Board Independent Auditing Services Agreement that would be Effective on July 1, 2021.

RECOMMENDATION:

A. Consider the December 16, 2020, Board Audit Committee recommendation to have TAP International, Inc. conduct the next tri-annual Risk Assessment that is due by October 2021 prior to the expiration on June 30, 2021 of the Board Independent Auditing Services Agreement with TAP International, Inc.;
B. Consider the December 16, 2020, Board Audit Committee recommendation to direct staff to initiate a procurement process to enter into a new Board Independent Auditing Services Agreement that would be effective on July 1, 2021; and
C. Provide final direction, as needed, based upon the Board Audit Committee recommendations.

SUMMARY:
On May 23, 2017, the Board approved an on-call consultant agreement with TAP International, Inc. (TAP International) for Board Independent Auditing Services and on April 28, 2020, the Board approved extension of the agreement through June 30, 2021. The agreement requires TAP International to work with the Board and the Board Audit Committee (BAC) to develop an annual audit program, assess operational risks, advise on potential audits to ensure Santa Clara Valley Water District (Valley Water) is in full compliance with its policies, procedures, and regulations, and to conduct audits as directed by the Board and BAC.

On September 26, 2018, in accordance with the BAC charter, TAP International presented the final Risk Assessment Model to the BAC assessing operational risks to Valley Water. The Risk Assessment Model developed heat maps of Valley Water operational areas based on risk impact (low, moderate, and high risk). The results of the risk assessment included input from Valley Water's Board of Directors, management, and staff and would be used to assist in the development of an Annual Audit Work Plan. The highest risk areas included procurement, contract change order management, succession planning, and fraud prevention.

Per Article 3, subparagraph 7.4 of the BAC Charter, the BAC shall conduct a risk assessment every three years. The next tri-annual Risk Assessment is currently scheduled to be completed in October 2021. A Risk Assessment usually takes about four months to complete. At the October 21, 2020, Committee meeting, the BAC requested that staff proceed with a Master Services Request for Proposal (RFP) for additional auditors to complement TAP International as the "Chief Audit Executive." At the December 16, 2020, Committee meeting, the BAC requested that the following recommendations be brought to the full Board for approval:

1) Approve the assignment of TAP International to complete the next tri-annual Risk Assessment prior to the expiration of the Board Independent Auditing Services Agreement with TAP International on June 30, 2021; and

2) Direct staff to initiate a procurement process to enter into a new Board Independent Auditing Services Agreement that would be effective on July 1, 2021.

FINANCIAL IMPACT:
Adequate funding for the option(s) selected to complete the next Risk Assessment is included in the Office of Chief Financial Officer's Board-adopted FY 2020-2021 budget, Project 60131014, Continual Improvement.

CEQA:
The recommended action does not constitute a project under CEQA because it does not have the potential for resulting in direct or reasonably foreseeable indirect physical change in the environment.

ATTACHMENTS:
None.

UNCLASSIFIED MANAGER:
Darin Taylor, 408-630-3068

Santa Clara Valley Water District

File No.: 21-0074

Agenda Date: 1/26/2021
Item No.: *4.6.

BOARD AGENDA MEMORANDUM

SUBJECT:
Board Committee Reports. (PREVIOUSLY LISTED AS ITEM 4.4)

Standing Reports (Summary or Verbal Report):
1. Delta Conveyance Design and Construction Authority (DCA) Update
2. Delta Conveyance Finance Authority (Finance Authority) Update

Board Committees (Summary or Meeting Agenda):
3. Board Audit Committee (BAC)
4. Board Policy and Planning Committee (BPPC)
5. Capital Improvement Program (CIP) Committee
6. Diversity and Inclusion (D&I) Ad Hoc Committee
7. Stream Planning and Operations Committee (SPOC)
8. Homeless Encampment Ad Hoc Committee (HEAHC)
9. Recycled Water Committee (RWC)
10. Water Conservation and Demand Management (WCDM) Committee
11. Water Storage Exploratory Committee (WSEC)

Board Advisory Committees (Summary or Meeting Agenda):
12. Agricultural Water Advisory Committee (AWAC)
13. Environmental and Water Resources Committee (EWRC)
14. Santa Clara Valley Water Commission (Water Commission)
15. Youth Commission

Board Joint Committees (Summary or Meeting Agenda):
16. Joint Recycled Water Advisory Committee (JRWAC) (Sunnyvale)
17. Joint Recycled Water Advisory Committee (JRWAC) (East PA/PA/MV)
18. Joint Recycled Water Policy Advisory Committee (JRWPAC) (SJ/SC/TPAC)
19. Joint Water Resources Committee (JWRC) (Gilroy/Morgan Hill)
20. San Felipe Division Reach One

External Committees/Agencies (Verbal Reports):
21. ACWA and ACWA Joint Powers Insurance Authority
22. Joint Venture Silicon Valley Board of Directors
23. Landscape Committee
24. Local Agency Formation Commission (LAFCO)
25. Northern California Latino Water Coalition
26. Pajaro River Watershed Flood Protection Authority
27. Redevelopment Dissolution Countywide Oversight Board of Santa Clara County

28. Safe, Clean Water Independent Monitoring Committee (IMC)
29. San Francisquito Creek JPA
30. Santa Clara County Water Retailers
31. Santa Clara Valley Habitat Conservation Plan JPA
32. San Luis and Delta-Mendota Water Authority Board
33. Santa Clara County Emergency Operations Area Council
34. Santa Clara County Recycling and Waste Reduction Commission
35. Santa Clara County Special Districts Association
36. South County Regional Wastewater Authority (SCRWA)
37. Zone 7, EBRPD, ACWD, SCVWD, LARPD and Tri-Valley Conservancy Liaison Committee

ATTACHMENTS:

*Handout 4.6.3-A: 121620 BAC Summary
*Handout 4.6.3-B: 011321 BAC Summary
*Handout 4.6.4-A: 010721 BPPC Summary
*Handout 4.6.4-B: 012521 BPPC Agenda
*Handout 4.6.7-A: 011421 SPOC Summary
*Handout 4.6.14-A: 012721 Water Commission Agenda
*Handout 4.6.28-A: 012721 IMC Agenda

MEMORANDUM

FC 14 (01-02-07)

TO: Board of Directors

FROM: Board Audit Committee

SUBJECT: 12/16/2020 Board Audit Committee Meeting Notes Summary

DATE: December 17, 2020

This memorandum summarizes the Board Audit Committee (Committee) meeting held on December 16, 2020, where the following work plan Items were discussed:

4.1 Receive and Discuss the District Counsel Audit Final Report and Management Response; and Approve the District Counsel Audit Final Report for Presentation to the Full Board.

Recommendation:
A. Receive and discuss the District Counsel Audit Final Report and Management Response; and
B. Approve the District Counsel Audit Final Report and direct staff and TAP International, Inc. to present to the full Board at a future Board meeting.

Ms. Denise Callahan, TAP International, Inc. (TAP), reviewed the information on this Item, per the attached Committee Agenda Memorandum, and per the information contained in Attachment 1.

The Committee considered the attached District Counsel Audit Final Report, and it was moved by Director LeZotte, seconded by Director Kremen, and unanimously carried that the District Counsel Audit Final Report is approved, and that staff and TAP present the report to the full Board at a future Board meeting, by roll call vote.

4.2 Discuss Options to Conduct the October 2021 Risk Assessment given that the Board Independent Auditing Services Agreement with TAP International Expires on June 30, 2021 and Provide Direction to Staff.

Recommendation: Discuss options to conduct the October 2021 Risk Assessment given that the Board Independent Auditing Services Agreement with TAP International expires on June 30, 2021 and provide direction to staff.

Mr. Darin Taylor, Chief Financial Officer, reviewed the options.

It was moved by Director LeZotte, seconded by Director Kremen, and unanimously carried that the Committee recommend to the full Board that:

- TAP to initiate the Risk Assessment such that it can be completed prior to TAP's agreement expiration on June 30, 2021; and
- Staff to initiate a procurement process for a "Chief Audit Executive" that would begin service on July 1, 2021.

4.3 Review and Approve the Updated 2020 Board Audit Committee Work Plan and Proposed 2021 Board Audit Committee Work Plan.

Recommendation:
A. Review and Discuss topics of interest raised at prior Board Audit Committee (BAC) Meetings and make any necessary adjustments to the BAC Work Plan; and
B. Approve the updated 2020 BAC Work Plan and proposed 2021 BAC Work Plan.

Mr. Taylor reviewed the information on this Item, per the attached Committee Agenda Memorandum.

The Committee considered the attached Updated 2020 BAC Work Plan and proposed 2021 BAC Work Plan, and it was moved by Director Kremen, seconded by Director LeZotte, and unanimously carried that the Committee approved the Updated 2020 BAC Work Plan and proposed 2021 BAC Work Plan, by roll call vote.

4.4 Recommended Updates to Annual Audit Work Plan.

Recommendation: Discuss the Annual Audit Work Plan and approve any updates to the Board, if necessary

Mr. Darin Taylor, Chief Financial Officer, reviewed the information on this Item, per the attached Committee Agenda Memorandum.

The Committee noted the information without formal action.

5.1 Follow up Discussion on Valley Water Comprehensive Annual Financial Report Transparency Related to Recording the Allowance for Doubtful Accounts.

Recommendation: Receive the information and discuss the process of recognizing allowance for Doubtful Accounts.

The Committee noted the information without formal action.

5.2 Receive an Update on the Status of the Safe, Clean Water Program Grant Management Audit.

Recommendation: Receive an update on the status of the on-going Safe, Clean Water Program Grant Management Audit.

Mr. Drummond Kahn and Ms. Greta McDonald, TAP International, Inc. (TAP), reviewed the information on this Item, per the attached Committee Agenda Memorandum.

The Committee noted the information without formal action, and requested the following:

- The Committee requested that staff bring this back to the Committee at a future meeting to discuss the payment policy processes.

5.3 Receive an Update on the Status of the Permitting Best Practices Audit.

Recommendation: Receive an update on the status of the on-going Permitting Best Practices Audit.

Ms. Callahan reviewed the information on this Item, per the attached Committee Agenda Memorandum.

The Committee noted the information without formal action, and requested the following:

- Staff to bring this item back to the Committee at the next meeting.

Board member comments and suggestions can be forwarded to Mr. Max Overland, Assistant Deputy Clerk at (408) 630-2749 or by email to moverland@valleywater.org.

THIS PAGE INTENTIONALLY LEFT BLANK

MEMORANDUM

FC 14 (01-02-07)

TO: Board of Directors

FROM: Board Audit Committee

SUBJECT: 01/13/2021 Board Audit Committee Meeting Notes Summary

DATE: January 14, 2020

This memorandum summarizes the Board Audit Committee (Committee) meeting held on January 13, 2021, where the following work plan Items were discussed:

4.1 Board Audit Committee's 2020 Annual Self-Evaluation.

Recommendation:
A. Conduct the Annual Self-Evaluation;
B. Direct staff to prepare a formal report; and
C. Direct staff to return to the Board Audit Committee for approval to present the report to the full Board.

Chairperson Keegan reviewed the information on this Item, per the attached Committee Agenda Memorandum.

The Committee noted the information and requested the following:

- The Committee requested staff to email the Annual Self-Evaluation to the Committee members to fill out and then email completed forms to the Clerk of the Board.

4.2 Discuss Options to Evaluate Risk Management Organizational Alignment; and Direct Staff to Present the Recommended Option to the Full Board for Approval to Update the Annual Audit Work Plan.

Recommendation:
A. Discuss the options to evaluate Risk Management Organization alignment; and
B. Direct staff to present the recommended option to the full Board for approval to update the Annual Audit Work Plan.

Mr. Darin Taylor, Chief Financial Officer, reviewed the information on this Item, per the attached Committee Agenda Memorandum, and per the information contained in Attachment 1.

The Committee considered the attached Options to Evaluate Risk Management Organizational Alignment, and it was moved by Director Kremen, seconded by Director LeZotte, and unanimously carried that the Committee approved Option C contained in Attachment 1, Page 1, by roll call vote.

4.3 Request Board Auditor Activity Report from TAP International, Inc. to Evaluate Board Auditor Performance.

Recommendation: Request Board Auditor Activity Report from TAP International, Inc. to Evaluate Board Auditor Performance.

Mr. Taylor reviewed the information on this Item, per the attached Committee Agenda Memorandum.

Director LeZotte moved, and Chair Keegan seconded, and it unanimously carried that the Committee approved the request that TAP International provide the Committee a Board Auditor Activity Report to evaluate Board Auditor performance, by roll call vote. Director Kremen was absent.

4.4 Receive and Discuss the Safe, Clean Water Program Grant Management Audit Draft Report and Management Response; and Approve the Safe, Clean Water Program Grant Management Audit Draft Report for Presentation to the Board.

Recommendation:
A. Receive and discuss the Safe, Clean Water Program Grant Management Audit Draft Report and Management Response; and
B. Approve the Safe, Clean Water Program Grant Management Audit Draft Report and direct staff and subconsultants to present to the Board at a future Board meeting.

Mr. Drummond Kahn and Ms. Greta McDonald, TAP International, Inc. (TAP), reviewed the information on this Item, per the attached Committee Agenda Memorandum, and per the information contained in Attachment 1.

Chairperson Keegan read into the record the following statement of Ms. Trish Mulvey, Palo Alto resident: *How can these questions and concerns posed to the Valley Water Board by a colleague regarding the next Safe, Clean Water Grants Program be addressed before the first Measure S grant cycle? What are the best practices for grants to individuals? Can a management response be included when this audit is presented to the full Board? "Grants for individuals will get really messy and will create a large load on the grant administration. There could be thousands of applications. Please limit the language for grants for individuals to state that there needs to be a public benefit or remove the word "individual." The way this is written the public will expect opportunity for grants for all these topics. Would this really fund someone's private well? I see several concerns with flood protection grants. How to differentiate between debris and habitat? Who [is] to decide if the debris is a flood risk? Who is liable should an area flood where Valley Water denied grant? Should the public pay for lack of maintenance or illegal work by private residents? My neighbor dumped loads of brush cuttings in the creek, should the public pay to remove?"*

Mr. Steve Holmes, of undisclosed residency, expressed support for this audit and requested that the Committee consider delaying insurance requirements until the agreement and permits have been acquired. There is concern that the permitting process can take up to two years to acquire causing unwarranted insurance expense.

The Committee considered the attached Safe, Clean Water Program Grant Management Audit Draft Report, and it was moved by Director LeZotte, seconded by Director Kremen, and unanimously carried that the Committee approved the Safe, Clean Water Program Grant Management Audit Draft Report and directed staff and subconsultants to present to the full Board at a future Board meeting, by roll call vote.

4.5 Recommended Updates to Annual Audit Work Plan.

Recommendation: Discuss the Annual Audit Work Plan and approve any updates to recommend to the Board, if necessary.

Mr. Taylor reviewed the information on this Item, per the attached Committee Agenda Memorandum.

The Committee noted the information, without formal action.

4.6 Review and Approve the Updated 2021 Board Audit Committee Work Plan.

Recommendation:
A. Review and Discuss topics of interest raised at prior Board Audit Committee (BAC) Meetings and make any necessary adjustments to the BAC Work Plan; and
B. Approve the updated 2021 BAC Work Plan.

Mr. Taylor reviewed the information on this Item, per the attached Committee Agenda Memorandum.

Chairperson Keegan read into the record the following statement of Ms. Mulvey: *Thank you for including this inquiry (Line 80): "Recommendation: Discuss the potential for a desk review or audit of the Sponsorship Program." I hope an audit is approved and will start soon.*

The Committee considered the attached updated 2021 Board Audit Committee Work Plan, and it was moved by Director LeZotte, seconded by Chairperson Keegan, and unanimously carried that the Committee approved the updated 2021 Board Audit Committee Work Plan, by roll call vote. Director Kremen was absent.

5.1 Valley Water Policy Discussion Related to Financial Auditor Responsibility.

Recommendation:
A. Discuss Valley Water Policy issues related to Financial Auditor responsibilities; and
B. Recommend to the full Board that this policy issue be referred to the Board Policy and Planning Committee for further discussion and refinement.

Mr. Taylor reviewed the information on this Item, per the attached Committee Agenda Memorandum.

The Committee considered the Valley Water Policy related to Financial Auditor Responsibility, and it was moved by Director LeZotte, seconded by Chairperson Keegan, and unanimously carried that the Committee recommend to the full Board that this issue be referred to the Board Policy and Planning Committee for further discussion and refinement, by roll call vote. Director Kremen was absent.

5.2 Discuss Scope of Annual Audit Training from Board Independent Auditor

Recommendation: Discuss Scope of Annual Audit Training from Board Independent Auditor.

Ms. Callahan reviewed the information on this Item, per the attached Committee Agenda Memorandum.

The Committee noted the information without formal action, and requested the following:

- Continue this item to a future Committee meeting once the full Board has selected the new Board Audit Committee members.

5.3 Valley Water Comprehensive Annual Financial Report for the Fiscal Year Ending on June 30, 2020.

Recommendation: Discuss the Valley Water Comprehensive Annual Financial Report (CAFR) for the Fiscal Year (FY) Ending on June 30, 2020, that staff will be recommending for Board acceptance and provide direction as needed.

Mr. Taylor reviewed the information on this Item, per the attached Committee Agenda Memorandum.

The Committee noted the information, without formal action.

5.4 Receive an Update on the Status of the Permitting Best Practices Audit.

Recommendation: Receive an update on the status of the on-going Permitting Best Practices Audit.

Ms. Callahan reviewed the information on this Item, per the attached Committee Agenda Memorandum.

The Committee noted the information, without formal action.

5.5 Receive and Discuss a Status Update on the Implementation of Audit Recommendations.

Recommendation: Receive and discuss a status update on the implementation of audit recommendations.

Mr. Taylor reviewed the information on this Item, per the attached Committee Agenda Memorandum.

The Committee noted the information, without formal action.

Board member comments and suggestions can be forwarded to Mr. Max Overland, Assistant Deputy Clerk at (408) 630-2749 or by email to moverland@valleywater.org.

MEMORANDUM

FC 14 (02-08-19)

TO: Board of Directors

FROM: Nai Hsueh,
BPPC Chair

SUBJECT: Board Policy and Planning Committee (BPPC) January 7, 2021 Meeting Summary

DATE: 01/20/2021

This memorandum summarizes agenda items from the special meeting of the Board Policy and Planning Committee (BPPC) held on January 7, 2021.

DISCUSS PROPOSED MODIFICATIONS TO BOARD GOVERNANCE ENDS POLICY GENERAL PRINCIPLES E-1 RELATIVE TO ENVIRONMENTAL JUSTICE LANGUAGE AND PERFORMANCE METRICS.
Ms. Linda Nguyen reviewed the information on this item.

The Committee discussed the proposed modifications to the general principles and provided final input for consideration. The Committee supported staff's recommended modifications and requested that they be finalized and scheduled for full Board consideration.

REVIEW AND DISUCSS BOARD GOVERNANCE ENDS POLICY 2 (E-2) TO PROPERLY REFLECT BOARD'S VISION.
Mr. Vincent Gin and Ms. Kirsten Struve provided an update on the work being performed to update Board Governance Ends Policy 2 (E-2) and share a few staff-level concepts to incorporate the Board's vision.

The Committee discussed staff's current work path and presented concepts and provided input for consideration. The Committee requested that staff continue working on draft policy language for presentation at the March BPPC meeting.

Included for board information is the Board Policy and Planning Committee's 2020 Accomplishment Report (Attachment 1).

2020 -2021 Board Policy and Planning Committee Accomplishments Report

Subject		Task	Action Taken
Board Planning Process	**A.**	Provide ongoing support for Board Planning Activities	
	1.	Develop FY20-21 Board Policy Planning and Performance Monitoring Calendars	Draft FY21 Calendar approved by the Board on 8/11/20; Revsied and resubmitted to Board for approval on 10/27/20
	2.	Discuss FY20-21 Board Budget Message & Board Work Plan	FY21 Board Work Plan and Chair messaged approved by the Board on 8/11/20
	3.	Planning for Board's FY21-22 Strategic Planning Workshop	FT22 Strategic Planning Workshop recommendation approved by the Board on 11/24/20. Session scheduled for January 2021.
	B.	Provide Support for Board Policy Review	
	1.	Report on Outreach Plan for use of District Property for Trails	At the 10/26/20 meeting the BPPC recommended that staff schedule a public input meeting in mid-November or beginning of Deceber and return to the BPPC with a report on the public input.
	2.	Outreach Findings on the Untreated Surface Water Program	
	3.	Develop new Ends Policy reflecting the Board's Goals and Objectives for affordable and effective level and costs of services, and associated strategies to achieve the goals and objectives for Flood Protection Projects. (E-3)	
	4.	Review Ends Policy 4 to properly document Board's vision and monitoring process on Flood Protection, Stream Stewardship, Trails, Open Space Preserve, and Climate Change policies.	BPPC continues to review and provide input on E-4 policy, including addressing protection of endangered species in Goal 4.1; clarifying that environmental stewardship is optimized in project planning and operations in Goal 4.2; incorporating environmental justice principles throughout the policy (including making E-1 a stand alone policy); removing the climate change goal and develop and stand-alone climate change Ends Policy and Climate Change Action Plan; as well as other minor wording changes.
	5.	Review Ends 2 (E-2) - There is a Reliable, Clean Water Supply for Current and Future Generations.	BPPC will review the restructuring of E-2 to include BAO Interpretations; connect with Water Supply Master Plan; reflect and incorporate strategies listed in all current master plans; incorporate language that reflects environmental and other beneficial, equitable, and affordable uses of water; and revise water supply to water resources to better reflect all water uses.
	6.	Revised Water Resources Protection Ordinance	
	7.	Climate Change Policy and Action Plan	BPPC reviewed the Climate Change Action Plan and Climate Change Ends Policy 5 (E-5) and suggested some additional clarification and language and authorized Board Chair to work with CEO to schedule policy discussion with the Board. Action Plan will return to the Committee for further review.
	8.	One Water Countywide Framework	

	9.	Proposed Modifications to Board Governance Ends Policy General Principles E-1 and Glossary to Add Environmental Justice Language	BPPC has reviewed, provided input, and requested modifications to E-1 policy. At the 1/7/21 special meeting the BPPC approved presenting staff's proposed modifications to the full Board.
Board Committees Principles and Structures	**C.**	Align Board Committees' Work Plans with Board Planning Calendar	
	1.	Review Effectiveness of Board Advisory Committees (External)	
Board & Organization Performance Monitoring	**D.**	Assignments as Requested by the Board	

THIS PAGE INTENTIONALLY LEFT BLANK

Santa Clara Valley Water District
Board Policy and Planning Committee Meeting

Teleconference Zoom Meeting

REGULAR MEETING
AGENDA

Monday, January 25, 2021
2:00 PM

District Mission: Provide Silicon Valley safe, clean water for a healthy life, environment and economy.

BOARD POLICY AND PLANNING COMMITTEE

Nai Hsueh - District 5, Committee Chair
Barbara Keegan - District 2, Committee Vice Chair
Linda J. LeZotte, District 4

During the COVID-19 restrictions, all public records relating to an open session item on this agenda, which are not exempt from disclosure pursuant to the California Public Records Act, that are distributed to a majority of the legislative body, will be available to the public through the legislative body agenda web page at the same time that the public records are distributed or made available to the legislative body, or through a link in the Zoom Chat Section during the respective meeting. Santa Clara Valley Water District will make reasonable efforts to accommodate persons with disabilities wishing to participate in the legislative body's meeting. Please advise the Clerk of the Board Office of any special needs by calling (408) 265-2600.

COMMITTEE CLERK

Michele L. King, CMC
Clerk, Board of Directors

Note: The finalized Board Agenda, exception items and supplemental items will be posted prior to the meeting in accordance with the Brown Act.

Santa Clara Valley Water District
Board Policy and Planning Committee

REGULAR MEETING
AGENDA

Monday, January 25, 2021	2:00 PM	Teleconference Zoom Meeting

IMPORTANT NOTICES

This meeting is being held in accordance with the Brown Act as currently in effect under the State Emergency Services Act, the Governor's Emergency Declaration related to COVID-19, and the Governor's Executive Order N-29-20 issued on March 17, 2020 that allows attendance by members of the Committee, staff, and the public to participate and conduct the meeting by teleconference, videoconference, or both.

Members of the public wishing to address the Committee during a video conferenced meeting on an item not listed on the agenda, or any item listed on the agenda, should use the "Raise Hand" or "Chat" tools located in Zoom meeting link listed on the agenda. Speakers will be acknowledged by the Committee Chair in the order requests are received and granted speaking access to address the Committee.

Santa Clara Valley Water District (Valley Water) in complying with the Americans with Disabilities Act (ADA), requests individuals who require special accommodations to access and/or participate in Valley Water Committee meetings to please contact the Clerk of the Board's office at (408) 630-2711, at least 3 business days before the scheduled meeting to ensure that Valley Water may assist you.

This agenda has been prepared as required by the applicable laws of the State of California, including but not limited to, Government Code Sections 54950 et. seq. and has not been prepared with a view to informing an investment decision in any of Valley Water's bonds, notes or other obligations. Any projections, plans or other forward-looking statements included in the information in this agenda are subject to a variety of uncertainties that could cause any actual plans or results to differ materially from any such statement. The information herein is not intended to be used by investors or potential investors in considering the purchase or sale of Valley Water's bonds, notes or other obligations and investors and potential investors should rely only on information filed by Valley Water on the Municipal Securities Rulemaking Board's Electronic Municipal Market Access System for municipal securities disclosures and Valley Water's Investor Relations website, maintained on the World Wide Web at https://emma.msrb.org/ and https://www.valleywater.org/how-we-operate/financebudget/investor-relations, respectively.

Under the Brown Act, members of the public are not required to provide identifying information in order to attend public meetings. Through the link below, the Zoom webinar program requests entry of a name and email address, and Valley Water is unable to modify this requirement. Members of the public not wishing to provide such identifying information

are encouraged to enter "Anonymous" or some other reference under name and to enter a fictional email address (e.g., attendee@valleywater.org) in lieu of their actual address. Inputting such values will not impact your ability to access the meeting through Zoom.

Zoom Meeting
https://valleywater.zoom.us/j/97064725908
Meeting ID: 970 6472 5908

One tap mobile
+16699009128,,97064725908# US (San Jose)

Dial by your location
+1 669 900 9128 US (San Jose)
Meeting ID: 970 6472 5908

1. Roll Call.

2. TIME OPEN FOR PUBLIC COMMENT ON ANY ITEM NOT ON THE AGENDA.

Notice to the Public: Members of the public who wish to address the Committee on any item not listed on the agenda should access the "Raise Hand" or "Chat" tools located in Zoom meeting link listed on the agenda. Speakers will be acknowledged by the Committee Chair in order requests are received and granted speaking access to address the Committee. Speakers comments should be limited to three minutes or as set by the Chair. The law does not permit Committee action on, or extended discussion of, any item not on the agenda except under special circumstances. If Committee action is requested, the matter may be placed on a future agenda. All comments that require a response will be referred to staff for a reply in writing. The Committee may take action on any item of business appearing on the posted agenda.

3. APPROVAL OF MINUTES:

3.1. Approval of Minutes. 21-0096

Recommendation: Approve the January 7, 2021 Minutes.
Manager: Michele King, 408-630-2711.
Attachments: Attachment 1: January 7, 2021 Minutes.

4. INFORMATION AND ACTION ITEMS:

4.1. Trails Policy Criteria and Guidance: Public Outreach Update. 20-1182

Recommendation:
A. Receive information regarding the stakeholder and community outreach for Valley Water's Public Trails Policy: Criteria and Guidance; and
B. Provide input on the Criteria and Guidance and confirm next steps.

Manager: Lisa Bankosh, 408-630-2618

Attachments: Attachment 1: Public Trails on Valley Water Lands: Draft Policy Cı

4.2. Work Plan, Meeting Schedule and Accomplishments Report. 21-0082

Recommendation:
A. Review 2021 Board Policy and Planning Committee's Work Plan and Accomplishments Report and incorporate any new tasks; and
B. Schedule Committee meetings as appropriate.

Manager: Michele King, 408-630-211

Attachments: Attachment 1: 2021 BPPC Work Plan & Accomplishments Report

5. CLERK REVIEW AND CLARIFICATION OF COMMITTEE REQUESTS.

This is an opportunity for the Clerk to review and obtain clarification on any formally moved, seconded, and approved requests and recommendations made by the Committee during the meeting.

6. ADJOURN:

6.1. Adjourn to Regular Meeting at 2:00 p.m., on Monday, February 22, 2021, to be called to order in compliance with the State Emergency Services Act, the Governor's Emergency Declaration related to COVID-19, and the Governor's Executive Order N-29-20.

MEMORANDUM

FC 14 (02-08-19)

TO:	Board of Directors	**FROM**:	Barbara Keegan SPOC Chair
SUBJECT:	Stream Planning and Operations Committee (SPOC) January 14, 2021 Meeting Summary	**DATE**:	01/21/2021

This memorandum summarizes the information and action items from meeting of the Stream Planning and Operations Committee (SPOC) held on January 14, 2021.

REVIEW OF DRAFT STREAM PLANNING AND OPERATIONS COMMITTEE (SPOC) 2021 WORK PLAN, OVERVIEW AND UPDATE ON THE FISH AQUATIC HABITAT COLLABORATIVE EFFORT (FAHCE), AND UPDATE ON THE ANDERSON DAM SEISMIC RETROFIT PROJECT.

The committee received an update on the following:

- FAHCE program, including a very informative History of FAHCE Program Adaptation and Progress timeline, included as Attachment 1
- Anderson Dam Seismic Retrofit Project

The committee unanimously approved the 2021 SPOC Work Plan presented by staff, included herein as Attachment 2.

The Committee participate in a Closed Session, conference with Legal Counsel on:

Pending Litigation
Pursuant to Government Code Section 54956.9(d)(1):
Fish and Aquatic Habitat Collaborative Effort (FAHCE) Guadalupe Coyote Resources Conservation District v. SCVWD Settlement regarding Water Rights

History of FAHCE Program Adaptation and Progress

Major Program Activities

1996
Guadalupe-Coyote Resource Conservation District (GCRCD) filed complaint with State Water Resources Control Board (SWRCB)

2003
Settlement Agreement initialed

Start

Key Measures Completed

1998
- Coyote & Guadalupe -discontinued use of in-stream gravel dams
- Upper Penitencia Creek -Maybury Weir Retrofit and Fish Screen
- Guadalupe River- SJWC Low-Flow Crossing Remediation

1999
- Upper Penitencia Ck -Noble Fish Ladder and Fish Screen Install
- Coyote Creek Percolation Pond Fish Ladder Install

2000
- Guadalupe River- Hillsdale Avenue Bridge Fish Barrier Removal
- Guadalupe Creek – Masson Diversion Fish Ladder and Screen

2001
- Guadalupe River- Alamitos Drop Structure Fish Ladder Install

2002
- Stevens Creek - Stream Gage 35 Barrier Removal

2003
- Guadalupe River - Removal of Old Julian Street Bridge Fish Barrier

Major Program Activities

2003-2013

Permitting pathway – began development of Admin Draft Habitat Conservation Plan

2014

Change to Regulatory Pathway- State Water Rights Permitting

Key Measures Completed

2004

- Guadalupe River - St. John Street Weir Fish Barrier Removal
- Guadalupe Creek - Stream Gage 43 Weir Retrofit

2006- 2009

- Guadalupe Watershed- Solar Bees installed at various locations for Mercury TMDL study

2008

- Guadalupe Creek – U Frame Channel Fish Ladder Install

2009

- Stevens Creek -Implemented a 2,100-foot geomorphic restoration at Blackberry Farm
- Stevens Creek – Remediated 4 fish barriers at Blackberry Farms

2013 - Current

- Guadalupe Reservoirs and Stevens Creek Reservoir- hypolimnetic oxygenation systems installed to reduce methyl- mercury

2014

- Guadalupe River- Highway 880 Weir Retrofit for Fish Passage

Major Program Activities

2015
North County Water Rights Change Petitions Filed and began admin draft of Fish Habitat Restoration Plan

2016-2019
Flow and Biological Model development for EIR, Model validation, Initiated Fisheries Monitoring Program

2019
Coordination of FAHCE and Anderson Seismic Retrofit Project

2020
Adaptive Management Team formation, Pilot Implementation of rule curves in Guadalupe and Stevens Creeks

Key Measures Completed

2016
- Stevens Creek- Evelyn Fish Ladder Remediation

2016 - 2020
Conducted Engineering Feasibility Studies Including:
- Moffett Fishway
- Ogier Ponds
- Lake Almaden
- Large Woody Debris and Gravel Augmentation

2017- Current
- Acquired Permits and Implemented FAHCE Fisheries Monitoring Program

Today

UPDATED Stream Planning and Operations Committee Draft Work Plan for Year 2021

The annual work plan establishes a framework for committee discussion and action during the annual meeting schedule. The committee work plan is a dynamic document, subject to change as external and internal issues impacting the District occur and are recommended for committee discussion. Subsequently, an annual committee accomplishments report is developed based on the work plan and presented to the District Board of Directors.

ITEM	WORK PLAN ITEM BOARD POLICY	MEETING DATE	INTENDED OUTCOME(S) (Action of Information Only)	ACCOMPLISHED DATE AND OUTCOME
1	**Election of Chair and Vice Chair for 2021**	January	• Committee Elects Chair and Vice Chair for 2020. **(Action)**	
2	**Review of Draft Committee Work Plan**	January	• Review draft 2021 Committee Work plan	
3	**Review of Final Committee Work Plan, the Outcomes of Board Action of Committee Requests, and the Committee Next Meeting Agenda**	March May July September November	• Receive and review the 2020 Board-approved Committee work plan. **(Action)** • Submit requests to the Board, as appropriate.	
4	**Receive updates on FAHCE progress and deliverables**	January March May July September November	• Receive updates on FAHCE activities and progress.	
5	**Discuss District and Non-District Projects and Other Activities that May Affect the FAHCE Settlement Agreement and Implementation**	January March May July September November	• Receive information on activities affecting the FAHCE Settlement Agreement and Implementation, as needed. • Provide input on these activities to ensure their consistency with the intent of the FAHCE Settlement Agreement. **(Action)**	

DRAFT

6	**Receive update on Anderson Dam Seismic Retrofit Project and Incorporation of FAHCE Conservation Measures for Coyote Creek**	January March July November	• Receive updates on the incorporation of FAHCE Conservation Measures for the Coyote Creek Watershed by the Anderson Dam Seismic Retrofit Project. **(Information)**	
7	**Receive FAHCE Draft EIR**	July	• Receive the FAHCE Draft EIR, when completed. **(Information)**	
8	**Discuss Prioritization of FAHCE Phase 1 Non-Flow Measures in the Guadalupe River and Stevens Creek Watersheds**	July	• Receive information on prioritization of the Phase 1 non-flow measures in the Guadalupe River and Stevens Creek Watersheds. • Provide input on prioritization of Phase 1 non-flow measures for consideration of the Initialing Parties. **(Action)**	
9	**Receive updates on consultant contracts for FAHCE**	May July	• Receive updates on FAHCE contracts requiring Board Approval.	
10	**Receive Updates on Discussions with the FAHCE Adaptive Management Team**	March September	• Receive updates on key discussions and decisions made by the FAHCE Adaptive Management Team. **(Information)**	
11	**Field Tour**	September	• Attend an annual field tour of a FAHCE or FAHCE related site.	

DRAFT

Santa Clara Valley Water District
Santa Clara Valley Water Commission Meeting

Teleconferencing Via Zoom
Join Zoom Meeting: https://valleywater.zoom.us/j/96251217041

REGULAR MEETING
AGENDA

Wednesday, January 27, 2021
2:00 PM

District Mission: Provide Silicon Valley safe, clean water for a healthy life, environment and economy.

Hon. Rich Constantine, Chair
Hon. Pam Foley, Vice Chair

Director Tony Estremera
Director Nai Hsueh
Director Linda J. LeZotte

During the COVID-19 restrictions, all public records relating to an open session item on this agenda, which are not exempt from disclosure pursuant to the California Public Records Act, that are distributed to a majority of the legislative body, will be available to the public through the legislative body agenda web page at the same time that the public records are distributed or made available to the legislative body, or through a link in the Zoom Chat Section during the respective meeting. Santa Clara Valley Water District will make reasonable efforts to accommodate persons with disabilities wishing to participate in the legislative body's meeting. Please advise the Clerk of the Board Office of any special needs by calling (408) 265-2600.

Mr. Rick Callender
(Staff Liaison)

Ms. Glenna Brambill
(Commission Liaison)
Management Analyst II
gbrambill@valleywater.org
1-408-630-2408

Note: The finalized Board Agenda, exception items and supplemental items will be posted prior to the meeting in accordance with the Brown Act.

Santa Clara Valley Water District
Santa Clara Valley Water Commission

REGULAR MEETING
AGENDA

Wednesday, January 27, 2021 | **2:00 PM** | **Teleconferencing Via Zoom**

IMPORTANT NOTICES

This meeting is being held in accordance with the Brown Act as currently in effect under the State Emergency Services Act, the Governor's Emergency Declaration related to COVID-19, and the Governor's Executive Order N-29-20 issued on March 17, 2020 that allows attendance by members of the Committee, staff, and the public to participate and conduct the meeting by teleconference, videoconference, or both.

Members of the public wishing to address the Committee during a video conferenced meeting on an item not listed on the agenda, or any item listed on the agenda, should use the "Raise Hand" or "Chat" tools located in Zoom meeting link listed on the agenda. Speakers will be acknowledged by the Committee Chair in the order requests are received and granted speaking access to address the Committee.

Santa Clara Valley Water District (Valley Water) in complying with the Americans with Disabilities Act (ADA), requests individuals who require special accommodations to access and/or participate in Valley Water Committee meetings to please contact the Clerk of the Board's office at (408) 630-2711, at least 3 business days before the scheduled meeting to ensure that Valley Water may assist you.

This agenda has been prepared as required by the applicable laws of the State of California, including but not limited to, Government Code Sections 54950 et. seq. and has not been prepared with a view to informing an investment decision in any of Valley Water's bonds, notes or other obligations. Any projections, plans or other forward-looking statements included in the information in this agenda are subject to a variety of uncertainties that could cause any actual plans or results to differ materially from any such statement. The information herein is not intended to be used by investors or potential investors in considering the purchase or sale of Valley Water's bonds, notes or other obligations and investors and potential investors should rely only on information filed by Valley Water on the Municipal Securities Rulemaking Board's Electronic Municipal Market Access System for municipal securities disclosures and Valley Water's Investor Relations website, maintained on the World Wide Web at https://emma.msrb.org/ and https://www.valleywater.org/how-we-operate/financebudget/investor-relations, respectively.

Under the Brown Act, members of the public are not required to provide identifying information in order to attend public meetings. Through the link below, the Zoom webinar program requests entry of a name and email address, and Valley Water is unable to modify this requirement. Members of the public not wishing to provide such identifying information are encouraged to enter "Anonymous" or some other reference under name and to enter a fictional email address (e.g., attendee@valleywater.org) in lieu of their actual address. Inputting such values will not impact your ability to access the meeting through Zoom.

Join Zoom Meeting: https://valleywater.zoom.us/j/96251217041

1. CALL TO ORDER:

1.1. Roll Call.

2. TIME OPEN FOR PUBLIC COMMENT ON ANY ITEM NOT ON THE AGENDA.

Notice to the Public: Members of the public who wish to address the Commission on any item not listed on the agenda should access the "Raise Hand" or "Chat" tools located in Zoom meeting link listed on the agenda. Speakers will be acknowledged by the Commission Chair in order requests are received and granted speaking access to address the Commission. Speakers comments should be limited to two minutes or as set by the Chair. The law does not permit Commission action on, or extended discussion of, any item not on the agenda except under special circumstances. If Commission action is requested, the matter may be placed on a future agenda. All comments that require a response will be referred to staff for a reply in writing. The Commission may take action on any item of business appearing on the posted agenda.

3. APPROVAL OF MINUTES:

3.1. Approval of Minutes. 21-0038

Recommendation: Approve the October 28, 2020, Meeting Minutes.
Manager: Michele King, 408-630-2711
Attachments: Attachment 1: 10282020 Water Comm Draft Mins
Est. Staff Time: 5 Minutes

4. ACTION ITEMS:

4.1. Election of Chair and Vice Chair. 21-0039

Recommendation: Elect 2021 Chair and Vice Chair
Manager: Michele King, 408-630-2711
Est. Staff Time: 5 Minutes

4.2. Review and Approve 2020 Annual Accomplishments Report for Presentation to the Board (Commission Chair) 21-0040

Recommendation:
A. Approve the 2020 Accomplishments Report for presentation to the Board; and
B. Provide comments to the Commission Chair to share with the Board as part of the Accomplishments Report presentation pertaining to the purpose, structure, and function of the Committee.

Manager: Michele King, 408-630-2711

Attachments: Attachment 1: 2020 Water Comm Accomplishments Report

Est. Staff Time: 5 Minutes

4.3. Discuss Preliminary Proposed Fiscal Year 2021-22 Groundwater Production Charges and Receive Board Guidance. 21-0024

Recommendation: Discuss Preliminary Proposed Fiscal Year 2021-22 Groundwater Production Charges and Receive Board Guidance.

Manager: Darin Taylor, 408-630-3068

Attachments: Attachment 1: PowerPoint

Est. Staff Time: 20 Minutes

4.4. Review Santa Clara Valley Water Commission Work Plan, the Outcomes of Board Action of Commission Requests; and the Commission's Next Meeting Agenda. 21-0041

Recommendation: Review the Commission work plan to guide the commission's discussions regarding policy alternatives and implications for Board deliberation.

Manager: Michele King, 408-630-2711

Attachments: Attachment 1: 2021 Water Comm Work Plan
Attachment 2: 04142021 Water Comm Draft Agenda

Est. Staff Time: 10 Minutes

5. INFORMATION ITEMS:

5.1. Standing Items Report. 21-0042

Recommendation: **Standing Items Reports**
This item allows the Santa Clara Valley Water Commission to receive verbal or written updates and discuss the Board's Fiscal Year 2021 Work Plan Strategies. These items are generally informational; however, the Commission may request additional information and/or provide collective input to the assigned Board Committee.

Manager: Michele King, 408-630-2711

Attachments: Attachment 1: Standing Items Report

Est. Staff Time: 10 Minutes

5.2. Update on Valley Water's Creation of New Office of Racial Equity, Diversity & Inclusion and Board Adoption of a Resolution Addressing Systemic Racism and Promoting Equity. 21-0043

Recommendation: Receive information on Valley Water's Creation of the Office of Racial Equity, Diversity and Inclusion, and the Board of Directors' Adoption of a Resolution Addressing Systemic Racism and Promoting Equity

Manager: Marta Lugo 408-630-2237

Attachments: Attachment 1: Board-Adopted Resolution

Est. Staff Time: 10 Minutes

6. CLERK REVIEW AND CLARIFICATION OF COMMITTEE REQUESTS.

This is an opportunity for the Clerk to review and obtain clarification on any formally moved, seconded, and approved requests and recommendations made by the Committee during the meeting.

7. REPORTS:

7.1. Director's Report

7.2. Manager's Report

7.3. Commission Member Report

7.4. Informational Link Report

8. ADJOURN:

8.1. Adjourn to Regular Meeting at 12:00 p.m., on Wednesday, April 14, 2021, to be called to order in compliance with the State Emergency Services Act, the Governor's Emergency Declaration related to COVID-19, and the Governor's Executive Order N-29-20.

This Page Intentionally Left Blank

Santa Clara Valley Water District
SCW Independent Monitoring Committee Meeting

Via Teleconferencing
Join Zoom Meeting: https://valleywater.zoom.us/j/91735815532

REGULAR MEETING
AGENDA

Wednesday, January 27, 2021
4:30 PM

District Mission: Provide Silicon Valley safe, clean water for a healthy life, environment and economy.

SAFE, CLEAN WATER
INDEPENDENT MONITORING
COMMITTEE

COMMITTEE OFFICERS:
Kathleen Sutherland, Committee Chair
Bill Hoeft, Committee Vice Chair

During the COVID-19 restrictions, all public records relating to an open session item on this agenda, which are not exempt from disclosure pursuant to the California Public Records Act, that are distributed to a majority of the legislative body, will be available to the public through the legislative body agenda web page at the same time that the public records are distributed or made available to the legislative body, or through a link in the Zoom Chat Section during the respective meeting. Santa Clara Valley Water District will make reasonable efforts to accommodate persons with disabilities wishing to participate in the legislative body's meeting. Please advise the Clerk of the Board Office of any special needs by calling (408) 265-2600.

Glenna Brambill, Committee Liaison
gbrambill@valleywater.org

BOARD REPRESENTATIVES:
Nai Hsueh, Board Representative
Tony Estremera, Board Alternate

Note: The finalized Board Agenda, exception items and supplemental items will be posted prior to the meeting in accordance with the Brown Act.

Santa Clara Valley Water District
SCW Independent Monitoring Committee

REGULAR MEETING
AGENDA

Wednesday, January 27, 2021 | **4:30 PM** | **Via Teleconferencing**

IMPORTANT NOTICES

This meeting is being held in accordance with the Brown Act as currently in effect under the State Emergency Services Act, the Governor's Emergency Declaration related to COVID-19, and the Governor's Executive Order N-29-20 issued on March 17, 2020 that allows attendance by members of the Committee, staff, and the public to participate and conduct the meeting by teleconference, videoconference, or both.

Members of the public wishing to address the Committee during a video conferenced meeting on an item not listed on the agenda, or any item listed on the agenda, should use the "Raise Hand" or "Chat" tools located in Zoom meeting link listed on the agenda. Speakers will be acknowledged by the Committee Chair in the order requests are received and granted speaking access to address the Committee.

Santa Clara Valley Water District (Valley Water) in complying with the Americans with Disabilities Act (ADA), requests individuals who require special accommodations to access and/or participate in Valley Water Committee meetings to please contact the Clerk of the Board's office at (408) 630-2711, at least 3 business days before the scheduled meeting to ensure that Valley Water may assist you.

This agenda has been prepared as required by the applicable laws of the State of California, including but not limited to, Government Code Sections 54950 et. seq. and has not been prepared with a view to informing an investment decision in any of Valley Water's bonds, notes or other obligations. Any projections, plans or other forward-looking statements included in the information in this agenda are subject to a variety of uncertainties that could cause any actual plans or results to differ materially from any such statement. The information herein is not intended to be used by investors or potential investors in considering the purchase or sale of Valley Water's bonds, notes or other obligations and investors and potential investors should rely only on information filed by Valley Water on the Municipal Securities Rulemaking Board's Electronic Municipal Market Access System for municipal securities disclosures and Valley Water's Investor Relations website, maintained on the World Wide Web at https://emma.msrb.org/ and https://www.valleywater.org/how-we-operate/financebudget/investor-relations, respectively.

Under the Brown Act, members of the public are not required to provide identifying information in order to attend public meetings. Through the link below, the Zoom webinar program requests entry of a name and email address, and Valley Water is unable to modify this requirement. Members of the public not wishing to provide such identifying information are encouraged to enter "Anonymous" or some other reference under name and to enter a fictional email address (e.g., attendee@valleywater.org) in lieu of their actual address. Inputting such values will not impact your ability to access the meeting through Zoom.

Join Zoom Meeting: https://valleywater.zoom.us/j/91735815532

1. CALL TO ORDER:

1.1. Roll Call.

2. TIME OPEN FOR PUBLIC COMMENT ON ANY ITEM NOT ON THE AGENDA.

Notice to the Public: Members of the public who wish to address the Committee on any item not listed on the agenda should access the "Raise Hand" or "Chat" tools located in Zoom meeting link listed on the agenda. Speakers will be acknowledged by the Committee Chair in order requests are received and granted speaking access to address the Committee. Speakers comments should be limited to two minutes or as set by the Chair. The law does not permit Committee action on, or extended discussion of, any item not on the agenda except under special circumstances. If Committee action is requested, the matter may be placed on a future agenda. All comments that require a response will be referred to staff for a reply in writing. The Committee may take action on any item of business appearing on the posted agenda.

3. APPROVAL OF MINUTES:

3.1. Approval of Minutes 21-0073

Recommendation: Approve 12022020 SCW IMC Meeting Minutes

Attachments: Attachment 1: 12022020 SCW IMC DRAFT Mins

4. OUTCOME OF SUBCOMMITTEE MEETINGS:

4a. Subcommittee Chairs report out on key areas of discussions and recommendations.

5. NEXT STEPS:

5a. January 28, 2021, IMC Report Drafting Meeting (IMC Chair and Subcommittee Chairs)

5b. February 10, 2021, Full Committee Meeting Report
i. Approve Final IMC Report

5c. February 23, 2021, IMC Chair present Final IMC Report to Board

6. CLERK REVIEW AND CLARIFICATION OF COMMITTEE REQUESTS.

This is an opportunity for the Clerk to review and obtain clarification on any formally moved, seconded, and approved requests and recommendations made by the Committee during the meeting.

7. ADJOURN:

7.1. Adjourn to Regular Meeting at 4:00 p.m., on Wednesday, February 10, 2021, to be called to order in compliance with the State Emergency Services Act, the Governor's Emergency Declaration related to COVID-19, and the Governor's Executive Order N-29-20.

Santa Clara Valley Water District

File No.: 20-0918

Agenda Date: 1/26/2021
Item No.: 5.1.

BOARD AGENDA MEMORANDUM

SUBJECT:
Consider Decommissioning of the Anderson Hydroelectric Facility.

RECOMMENDATION:

A. Receive the cost-benefit analysis for the Anderson Hydroelectric Facility (Facility);
B. Concur with staff's determination, based on results from the cost-benefit analysis, that it would be justified for Valley Water to pursue the surrender and decommissioning of the Facility; and
C. Direct staff to take the necessary steps to seek approval from the Federal Energy Regulatory Commission (FERC) to surrender and decommission the Facility, including, but not limited to:
    i. Evaluate the surrender of the license exemption and decommissioning of the Facility in the Anderson Dam Seismic Retrofit Project (ADSRP) Environmental Impact Report (EIR); and
    ii. Coordinate with FERC and other regulatory agencies to submit all applications and obtain any necessary approvals to implement decommissioning of the Facility as part of the ADSRP.

SUMMARY:
The Santa Clara Valley Water District (Valley Water) has been operating the Anderson Hydroelectric Facility (Facility) at Anderson Dam for over 30 years. The Facility has been generating renewable energy as part of the overall energy portfolio of Valley Water. Over the last several years, staff has made significant strides in diversifying our energy portfolio towards much more economically favorable and greener solutions to the point that almost 100% of Valley Water's energy use is from carbon-free sources at a very competitive cost. As with any aging infrastructure, the cost of Operations and Maintenance (O&M) has been increasing over the years and, in the last 18 years, exceeded the revenues from power generation at the Facility. Revenues are projected to keep declining over the years and the O&M cost will continue to increase as we reach the end of useful life of the assets at this Facility. Given the negative return on investment as well as the fact that the overall energy portfolio for Valley Water is already at 100% renewable through the Power and Water Resources Pooling Authority (PWRPA), staff recommends discontinuing operations and decommissioning of the Facility. In order to proceed with those actions, Valley Water would need to surrender the license exemption to the Federal Energy Regulatory Commission (FERC).

Background

In April 1984, Valley Water submitted to FERC an application for exemption of the Facility from licensing and has been operating the Facility since January 1988 under the FERC license exemption. The Facility was constructed in the mid-1980s to generate energy from water released from Anderson Dam through its outlet pipe. The Facility consists of two 500-kilowatt (kW) Francis turbines and two 470-kW induction generators. Throughout the lifetime of the Facility, it has generated approximately 39,700,000 kilowatt-hours (kWh) of renewable energy, valued at approximately $2,910,000, at an O&M cost of $3,450,000. In recent years, the operational restrictions placed on the Facility have resulted in decrease of revenues while the maintenance costs have increased as the assets continue to age and are reaching their end of useful life.

Utility Agreements and Revenue

In order to sell power from the Facility to the utility grid, Valley Water entered a 30-year Qualifying Facilities Power Purchase Agreement (PPA) with the Pacific Gas and Electric Company (PG&E). The terms of the PPA included a rate schedule that was designed to be higher in the first 10 years to accelerate the capital recovery, whereas the rate was variable during the remaining 20 years of the PPA and was based on wholesale market rates. Valley Water received an average of $0.10 per kWh generated during the initial 10-year period of the agreement, and an average of $0.05 per kWh in the subsequent 20 years.

In November 2018, at the conclusion of the original 30-year PPA, staff worked with a consultant to evaluate multiple transition options. Valley Water transitioned the Facility to PG&E's new Renewable Energy Self-Generation Bill Credit Transfer program, which allows Valley Water to export renewable energy generated at the Facility to the grid and receive generation credits to up to fifty (50) of Valley Water's PG&E electrical services. During calendar year 2019, the hydroelectric generation data and resulting bill credit (savings) from the facility came out to an average of $0.06 per kWh.

O&M Costs

From fiscal year (FY) 2010 through FY 2019, Valley Water expended an average of $118,000 in annual Facility O&M costs. In comparison, the average annual revenue for the same 10-year period was only $42,000. On the other hand, the average O&M costs over the 32-year life of the Facility was $108,000 per year, whereas the annual revenue was $91,000.

Cost-Benefit Analysis

The data for the last 18 years shows that the Facility has been running a deficit. Figure 1 reflects that 17 out of the last 18 years of operating the Facility resulted in an annual financial loss.

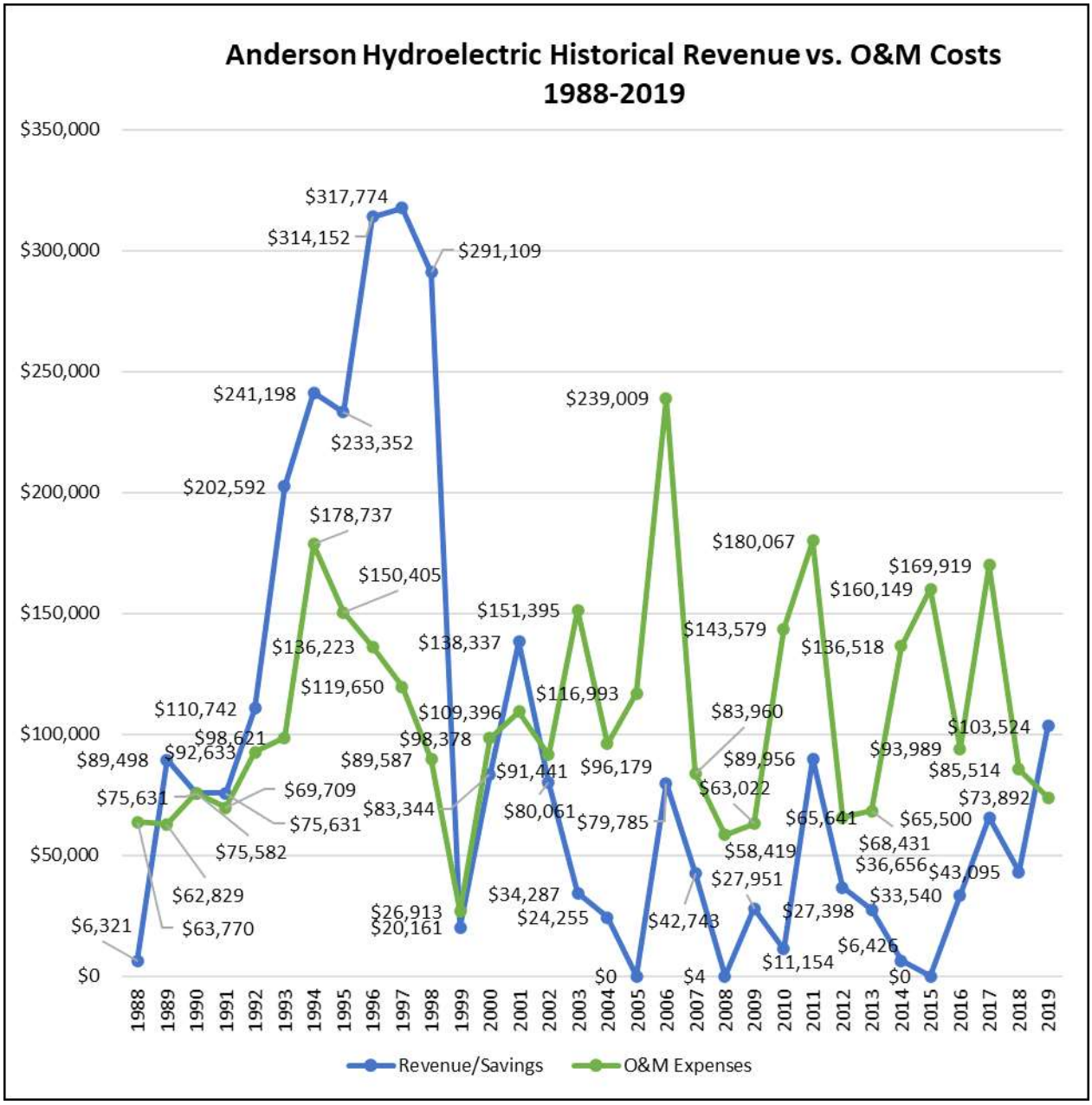

Figure 1: Facility Cost and Revenue

In addition, the Facility currently relies on aging infrastructure to generate energy. In recent years, the Facility has experienced unforeseen downtime or partial downtime due to equipment failure.

When equipment is available, multiple constraints have hindered the potential generation and revenue from the Facility. Recent California drought conditions have led to periods of low reservoir levels and seismic restrictions have limited the maximum amount of water that can be stored in Anderson Reservoir. The lower reservoir levels decrease the head pressure available to drive the turbines and limit power generation. The downstream environmental flow regulations of Coyote

Creek also dictate the amount of flow available for power generation at the Facility. Depending on creek conditions, the flows to Coyote Creek may not meet the minimum flow requirement to operate the turbine generators at the Facility. As a result, the generation of power at the Facility has been - and will likely continue to be- much lower than what is necessary to recoup the O&M cost.

The Facility would cost about $2,950,000 in rehabilitation and components replacement during the next 20 years, per Valley Water's asset management plan. The cost covers upgrades to the turbines, the electrical and SCADA systems, and the building that houses the Facility. The changes to the Facility to account for rehabilitation of aging equipment and the changing operating conditions are subject to FERC coordination and approval.

Instead of operating the Facility at a loss, staff believes Valley Water is better off investing in green energy projects elsewhere. Renewable energy can be generated at large-scale solar projects that have a much better cost-benefit outlook.

Conclusion

Based on the cost-benefit analysis, staff recommends that Valley Water should file an application with FERC to surrender its license exemption and to decommission the Facility. FERC is expected to condition the surrender of the license exemption on Valley Water's completion of the ADSRP to FERC's satisfaction. If the Board concurs with this recommended "conditional surrender" approach, the decommissioning activities would be evaluated along with the seismic retrofit activities in the ADSRP EIR. Once the draft ADSRP EIR is completed, staff would file a surrender application with FERC to implement the ADSRP. After completion of the ADSRP EIR, our Board will consider the final EIR for certification prior to approving the ADSRP activities including decommissioning of the Facility.

FINANCIAL IMPACT:
Staff estimates an annual saving of about $75,000 on average associated with approval of this item. On the other hand, there is an immediate cost of about $5,000 to place flanges on the pipe and decommission the Facility. Funding for this last item is included in the FY202-21 budget of the Local Reservoir/Diversion Planning and Analysis project (# 91761001).

CEQA:
Should the Board concur with staff's recommendations, the decommissioning of the Facility will be included in the project description of the ADSRP EIR. The EIR will be completed and presented to the Board for review and certification prior to the Board deciding whether to approve the ADSRP, which will include decommissioning of the Facility.

ATTACHMENTS:
None.

UNCLASSIFIED MANAGER:
Greg Williams, 408-630-2867

THIS PAGE INTENTIONALLY LEFT BLANK

Santa Clara Valley Water District

File No.: 20-1202

Agenda Date: 1/26/2021
Item No.: 6.1.

BOARD AGENDA MEMORANDUM

SUBJECT:
Approve Amendment No. 1 to Agreement No. A4263A, with Kleinfelder, Inc., for On-Call Geotechnical Engineering Services, CAS File No. 4913, Increasing the Fee by $750,000, for a Total Revised Fee of $1,750,000; and Amendment No. 1 to Agreement No. A4264A, with Cal Engineering & Geology, Inc., for On-Call Geotechnical Engineering Services, CAS File No. 4940, Increasing the Fee by $750,000, for a Total Revised Fee of $1,750,000.

RECOMMENDATION:

A. Approve Amendment No. 1 to Agreement No. A4263A with Kleinfelder, Inc. for On-Call Geotechnical Engineering services, to increase the not-to-exceed fee by $750,000, resulting in a total not-to-exceed fee of $1,750,000; and
B. Approve Amendment No. 1 to Agreement No. A4264A with Cal Engineering & Geology, Inc. for On-Call Geotechnical Engineering services, to increase the not-to-exceed fee by $750,000, resulting in a total not-to-exceed fee of $1,750,000.

SUMMARY:
Santa Clara Valley Water District (Valley Water) performs a number of capital and operational projects and programs to meet its mission and goals in water supply, flood protection, and watershed stewardship. Valley Water's geotechnical engineering staff routinely provides specialized technical support for these capital and operational projects and programs. The on-call services agreements will augment the services by Valley Water staff and provide additional geotechnical engineering services as needed.

Project Background and Previous Board Actions

Starting in 2011, the Board began approving on-call geotechnical consultant services agreements to augment the services provided by Valley Water staff. The use of an on-call geotechnical services was a success in terms of delivering geotechnical aspects of projects efficiently while controlling costs through established labor rates.

Most recently, on May 28, 2019, the Board approved consultant agreements with Kleinfelder, Inc. and Cal Engineering & Geology, Inc. to perform on-call Geotechnical Engineering services, as needed, each for a three-year term. The services are generally provided through task orders of up to $200,000 approved by a Deputy Operating Officer.

Consultants Work Performed to Date

To date, Valley Water has issued a total of twenty-two (22) task orders for the two Agreements for various projects in planning, design, and construction phases and eighty (80%) of the approved not-to exceed fee of $1,000,000 for each consultant is expended. The expended amount is higher than anticipated due to the higher than anticipated demand for geotechnical support services from Capital Improvement Projects including but not limited to the Anderson Dam Federal Energy Regulatory Commission Order Compliance Project (FOCP), and ongoing operations and maintenance work.

Staff Management of Consultant Agreements

Staff has been actively monitoring and managing the Consultant's performance to ensure quality deliverables are produced on time and within budget. Progress meetings have been conducted periodically with the Consultants to assess progress of the projects. Valley Water also performs QA/AC review of all deliverables received from the Consultant for compliance with project scope, budget and schedule.

As generally required in all Valley Water consultant agreements, consultants are required to submit detailed monthly progress/status reports with their invoices. These reports are scrutinized by Valley Water staff before approval of any payment to the consultants.

Amendment No. 1 to Agreement No. A4263A and A4264A

Staff recommends approval of Amendment No. 1 to each agreement, which will increase the not-to-exceed fee by $750,000 for each agreement, resulting in a total not-to-exceed fee of $1,750,000 for each agreement. Valley Water has a large Capital Improvement Program consisting of numerous complex projects. Staff projects a continued demand for the same or a similar volume of geotechnical engineering services at similar expense for past task orders issued for FOCP, Capital Improvement Projects, and ongoing operations and maintenance work.

Approval of each Amendment No.1 will also allow staff to work towards the Board's directive of expediting the procurement process for a Public Private Partnership (P3) of the Purified Water Program. Advertising the Request for Proposals (RFP) for this P3 project is expected during FY22. Prior to the RFP advertisement, several preliminary geotechnical investigations will be completed to inform potential P3 proposers of site conditions.

On-call geotechnical engineering services for FOCP and Purified Water Program Project were not included in the scope of work for original agreements in 2019. These amendments will continue to provide a mechanism for both firms to perform the necessary geotechnical engineering services for the above-mentioned projects and keep them on schedule.

Based on staff's experiences with past task orders, increasing costs during the term of these agreements, and anticipated future increased costs to accomplish the services, staff recommends increasing the task order limit from $200,000 to $250,000.

Project staff also plans to solicit a new RFP for On-Call Geotechnical Engineering Services in early to mid-2021, since the existing agreements will expire in May 2022.

FINANCIAL IMPACT:
If the board approves both amendments, the not-to-exceed fee for each Agreement will be increased by the amount of $750,000, for a total financial impact of $1.5 million. No funds will be encumbered at this time for these Amendments. Individual operations and capital projects will budget and pay for these services as needed. Task orders will be approved by the Deputy Operating Officer for work on specific projects and funded by the adopted budget of those projects.

CEQA:
The recommended action does not constitute a project under CEQA because it does not have the potential for resulting in direct or reasonably foreseeable indirect physical change in the environment.

ATTACHMENTS:
Attachment 1: A4263A Amendment No. 1
Attachment 2: A4264A Amendment No. 1

UNCLASSIFIED MANAGER:
Rechelle Blank, 408-630-2615

THIS PAGE INTENTIONALLY LEFT BLANK

AMENDMENT NO. 1 TO AGREEMENT A4263A
BETWEEN THE SANTA CLARA VALLEY WATER DISTRICT
AND KLEINFELDER, INC.

This Amendment No. 1 (Amendment), effective as of the date it is fully executed by the Parties, amends the terms and conditions of the Standard On-Call Consultant Agreement A4263A (Agreement) dated May 28, 2019, between SANTA CLARA VALLEY WATER DISTRICT (Valley Water) hereinafter called Valley Water and KLEINFELDER, INC., (Consultant), collectively, the Parties.

RECITALS

WHEREAS, Consultant is currently providing professional on-call geotechnical engineering services for Valley Water in support of the Capital Improvement Program projects in all phases of development including planning, design, and construction, and in support of ongoing operations and maintenance work; and

WHEREAS, the Parties desire to increase the not-to-exceed fee to provide funds for Consultant to continue performing on-call geotechnical engineering services at the consistently higher than originally anticipated current volume and level of necessity experienced to date; to update the Standard On-Call Consultant Agreement language; increase the task order limit; and incorporate administrative changes.

NOW, THEREFORE, in consideration of the mutual promises and agreements stated herein and notwithstanding anything to the contrary stated in the Agreement, Valley Water and Consultant hereby agree to amend the Agreement as follows:

1. The Standard Consultant Agreement, Section Twelve, Miscellaneous Provisions, is amended to state as follows:

   "19. Choice of Law and Venue

   The Parties agree that this Agreement is to be governed, construed, and enforced in accordance with the laws of the State of California. The Parties also agree that the venue of any litigation arising out of or connected with this Agreement will lie exclusively in the state trial court or Federal District Court located in Santa Clara County in the State of California, and the Parties consent to jurisdiction over their persons and over the subject matter of any such litigation in such courts, and consent to service of process issued by such courts.

   20. No Third-Party Beneficiaries

   Nothing in this Agreement, whether express or implied, shall be construed to give any person or entity, other than the Parties hereto, any legal or equitable right, remedy, or claim under or in respect of this Agreement or any covenants, conditions, or provisions contained herein.

   21. Severability

   If a court of competent jurisdiction holds any provision of this Agreement to be illegal, unenforceable, or invalid in whole or in part for any reason, the validity and enforceability of the remaining provisions, or portions of them, will not be affected, unless an essential purpose of this Agreement would be defeated by the loss of the illegal, unenforceable, or invalid provision.

22. Debt Limitation

    This Agreement is contingent on the appropriation of sufficient funding by Valley Water for the services described in this Agreement. Valley Water is subject to laws or policies which limit its ability to incur debt in future years. Nothing in this Agreement shall constitute an obligation of future legislative bodies of Valley Water to appropriate funds for purposes of this Agreement.

23. Appendices

    The following listed Appendices are incorporated herein by this reference as though set forth in full:

    Revised Appendix One to the Revised Standard On-Call Consultant Agreement - Additional Legal Terms (REVISED)
    Appendix Two to the Revised Standard On-Call Consultant Agreement - Dispute Resolution (UNCHANGED)
    Appendix Three to the Revised Standard On-Call Consultant Agreement - Task Order Template (UNCHANGED)
    Revised Appendix Four to the Revised Standard On-Call Consultant Agreement - Insurance Requirements (REVISED)

24. Schedules and Attachments. Schedule OC, Scope of Services, and the following listed Attachments are incorporated herein by this reference as though set forth in full:

    Revised Attachment One to Schedule OC - Fees and Payments (REVISED)
    Attachment Two to Schedule OC - Schedule of Completion (UNCHANGED)
    Revised Attachment Three to Schedule OC - Consultant's Key Staff and Subconsultants (REVISED)
    Attachment Four to Schedule OC - Reference Materials (UNCHANGED)"

2. Appendix One to the Standard On-Call Consultant Agreement, Additional Legal Terms, is amended as set forth in the Revised Appendix One to the Revised Standard On-Call Consultant Agreement, Additional Legal Terms, attached hereto and incorporated herein by this reference.

3. Appendix Four to the Standard On-Call Consultant Agreement, Insurance Requirements, is amended as set forth in the Revised Appendix Four to the Standard On-Call Consultant Agreement, Insurance Requirements, attached hereto and incorporated herein by this reference.

4. Schedule OC - Scope of Services, Section 1. is amended to state as follows:

"**1. REPRESENTATIVES**

A. The District's representatives are as listed below. Unless otherwise provided in this Agreement, all correspondence to the District shall be addressed to the District's Project Manager.

Madhu Thummaluru (Valley Water Project Manager)
Senior Engineer
Dam Safety Program and Project Delivery Unit
Santa Clara Valley Water District
5750 Almaden Expressway
San Jose, CA 95118-3638

Phone: 408-630-2256
Email: mthummaluru@valleywater.org

Hemang Desai (Valley Water Unit Manager)
Dam Safety Program Manager
Dam Safety Program and Project Delivery Unit
Santa Clara Valley Water District
5750 Almaden Expressway
San Jose, CA 95118-3638

Phone: 408-630-3017
Email: hdesai@valleywater.org

Rechelle Blank (Division Deputy Operating Officer)
Watersheds Design and Construction Division
Santa Clara Valley Water District
5750 Almaden Expressway
San Jose, CA 95118-3638

Phone: 408-630-2615
Email: rblank@valleywater.org

B. The Consultant's Project Manager is as listed below. All District questions and correspondence pertaining to this Agreement shall be referred to the Consultant's Project Manager.

Glen Gorski
Project Manager
Kleinfelder
380 N. 1st Street, Suite A
San Jose, CA 95112

Phone: (510) 459-6297
Email: GGorski@kleinfelder.com

C. The Consultant's Principal Officer for this Agreement is as listed below. As per the Agreement, Section Twelve, subsection 18. Notices, all notices pertaining to this Agreement must be submitted to the Consultant's Principal Officer.

Eric Hinzel
Senior Program Manager
Kleinfelder, Inc.
1330 Broadway, Suite 1200
Oakland, CA 94612

Phone: (510) 628-9000
Email: ehinzel@kleinfelder.com"

5. Attachment One to Schedule OC, Fees and Payments, is amended as set forth in the Revised Attachment One to Revised Schedule OC, Fees and Payments, attached hereto and incorporated herein by this reference.

6. Attachment Three to Schedule OC, Consultants Key Staff and Subconsultants, is amended as set forth in the Revised Attachment Three to Revised Schedule OC, Consultants Key Staff and Subconsultants, attached hereto and incorporated herein by this reference.

7. All other terms and conditions of the Agreement not otherwise amended as stated herein remain in full force and effect.

IN WITNESS WHEREOF, THE PARTIES HAVE SET FORTH BELOW THEIR CONSENT TO THE TERMS AND CONDITIONS OF THIS AMENDMENT NO. 1 TO AGREEMENT A4263A THROUGH THE SIGNATURES OF THEIR DULY AUTHORIZED REPRESENTATIVES.

SANTA CLARA VALLEY WATER DISTRICT
Valley Water

By: _____

Chair, Board of Directors

Date: _____

ATTEST:

_____
Michele L. King, CMC
Clerk, Board of Directors

KLEINFELDER, INC.
Consultant

By: _____
Eric Hinzel
Senior Program Manager

Date: _____

Consultant's Address:

1300 Broadway, Suite 1200
Oakland, CA 94612

(REMAINDER OF PAGE INTENTIONALLY LEFT BLANK)

AMENDMENT NO. 1 TO AGREEMENT A4264A

REVISED APPENDIX ONE
ADDITIONAL LEGAL TERMS

1. Conflict of Interest for Future Services

Consultant, Consultant's parent company, Consultant's subsidiaries, or any affiliated entity sharing substantially similar ownership of or control with Consultant shall not submit a proposal:

A. For any agreement to be awarded for planning, design, construction management or construction of any project that is related to the Services provided pursuant to this Agreement;

B. In response to any request for proposal or District solicitation developed or prepared by or with the assistance of Consultant, Consultant's parent company, Consultant's subsidiaries, or any affiliated entity sharing substantially similar ownership of or control with Consultant; or

C. For any single or sole source products/services related to the Services pursuant to this Agreement, or have a financial stake in any single or sole source products/services resulting from this Agreement.

2. Dispute Resolution

If a dispute occurs between the Parties as a result of this Agreement, then the Parties agree to use the Dispute Resolution process outlined in the Revised Standard On-Call Consultant Agreement, Appendix Two Dispute Resolution.

3. Small Business Enterprise (SBE) Participation

This Agreement provides for the Consultant to include California Department of General Services certified Small/Micro Businesses in the performance of the Services, estimated to be **50%** or more of the Total Not-to-Exceed Fees stated in the Revised Standard On-Call Consultant Agreement, Revised Schedule OC, Revised Attachment One Fees and Payments, and Consultant agrees to use its best efforts to meet this goal.

4. Task Order Approvals

A. Services to be performed pursuant to a Task Order may only commence once a specific Notice to Proceed for that Task Order has been issued by the District.

B. Task Orders are subject to approval by the District's Deputy Operating Officer unless delegated to the Unit Manager.

C. District Unit Manager(s) is authorized to approve individual Task Orders in an amount not-to-exceed $ [Authorization Amount]. [NOT USED]

D. The total not-to-exceed amount for any one Task Order shall not exceed $250,000.

AMENDMENT NO. 1 TO AGREEMENT A4263A

REVISED APPENDIX FOUR
INSURANCE REQUIREMENTS

Please Note: Failure to comply with the instructions below could result in a delay in receiving the Notice to Proceed. The District will not be responsible for time lost or costs incurred due to failure to comply with these requirements. Please note the check-list of documents needed at the end of this Revised Appendix Four Insurance Requirements.

Without limiting the Consultant's indemnification of, or liability to, the Santa Clara Valley Water District ("Valley Water"), the Consultant must provide and maintain at its own expense, during the term of this Agreement, or as may be further required herein, the following insurance coverages and provisions as listed below.

Consultant must provide its insurance broker(s)/agent(s) with a copy of these requirements and warrants that these requirements have been reviewed by Consultant's insurance agent(s) and/or broker(s), who have been instructed by Consultant to procure the insurance coverage required herein.

In addition to certificates, Consultant must furnish Valley Water with copies of all original endorsements affecting coverage required by this Revised Appendix. The certificates and endorsements are to be signed by a person authorized by that insurer to bind coverage on its behalf. **All endorsements and certificates are to be received and approved by Valley Water before the Agreement is executed**. In the event of a claim or dispute, Valley Water has the right to require Consultant's insurer to provide complete, certified copies of all required pertinent insurance policies, including endorsements affecting the coverage required by this Revised Appendix Four Insurance Requirements.

If your insurance broker has any questions about the above requirements, please advise him/her to call Mr. David Cahen, District Risk Manager at (408) 630-2213.

Certificates of Insurance

Consultant shall furnish Valley Water with a Certificate of Insurance. The certificates will be issued on a standard ACORD Form.

Consultant shall instruct their insurance broker/agent to submit all insurance certificates and required notices electronically in PDF format to the designated Valley Water Contract Administrator and email a copy to **valleywater@ebix.com**.

The certificates will:

1. Identify the underwriters, the types of insurance, the insurance limits, the deductibles and the policy term;
2. Include copies of all the actual policy endorsements required herein; and
3. In the "Certificate Holder" box include:

   Santa Clara Valley Water District
   5750 Almaden Expressway
   San Jose, CA 95118
   Agreement A4263A / CAS No. 4913

IMPORTANT: The agreement or CAS number must be included.

AMENDMENT NO. 1 TO AGREEMENT A4263A

REVISED APPENDIX FOUR
INSURANCE REQUIREMENTS

In the Description of Operations/Locations/Vehicles/Special Items Box:

1. Certificate Holder shall be named as Additional Insured;
2. Valley Water agreement or project number shall appear;
3. The list of policies scheduled as underlying on the Umbrella policy shall be listed; and
4. Waiver of Subrogation must be indicated as endorsed to all policies.

If Consultant receives any notice that any of the insurance policies required by this Revised Appendix Four Insurance Requirements may be cancelled or coverage reduced for any reason whatsoever, Consultant or insurer shall immediately provide written notice to the designated Valley Water Contract Administrator that such insurance policy required by this Revised Appendix Four Insurance Requirements is canceled or coverage is reduced.

Maintenance of Insurance

If Consultant fails to maintain such insurance as is called for herein, Valley Water, at its option, may suspend payment for work performed and/or may order Consultant to suspend all Consultant's work at Consultant's expense until a new policy of insurance is in effect.

Renewal of Insurance

Consultant will provide Valley Water with a current Certificate of Insurance and endorsements within thirty (30) business days from the expiration of insurance.

Consultant shall instruct its insurance broker/agent to:

1. Submit all renewals of insurance certificates and required notices electronically in PDF format to: **valleywater@ebix.com**

2. Provide the following information in the "Certificate Holder" box:

   Santa Clara Valley Water District
   5750 Almaden Expressway
   San Jose, CA 95118
   Agreement A4263A / CAS No. 4913

IMPORTANT: The agreement or CAS number must be included.

Consultant must, at its sole cost and expense, procure and maintain during the entire period of this Agreement the following insurance coverage(s).

Required Coverages

1. Commercial General/Business Liability Insurance with coverage as indicated:

$2,000,000 per occurrence / **$2,000,000** aggregate limits for bodily injury and property

damage

General Liability insurance must include:

a. Coverage at least as broad as found in standard ISO form CG 00 01.
b. Contractual Liability expressly including liability assumed under this contract.
c. If Consultant must be working within fifty (50) feet of a railroad or light rail operation, any exclusion as to performance of operations within the vicinity of any railroad bridge, trestle, track, roadbed, tunnel, overpass, underpass, or crossway must be deleted, or a railroad protective policy in the above amounts provided.
d. Severability of Interest.
e. Broad Form Property Damage liability.

2. Business Auto Liability Insurance with coverage as indicated:

$2,000,000 combined single limit for bodily injury and property damage per occurrence, covering all owned, non-owned and hired vehicles.

3. Professional/Errors and Omissions Liability with coverage as indicated:

$5,000,000 per claim/ **$5,000,000** aggregate

Professional/Errors and Omission Liability appropriate to the Consultant's profession, and must include:

a. If coverage contains a deductible, or self-insured retention, it shall not be greater than one hundred thousand dollars ($100,000) per occurrence/event.
b. Coverage shall include contractual liability
c. If coverage is claims-made:

    i. Certificate of Insurance shall clearly state that the coverage is claims-made.
    ii. Policy retroactive date must coincide with or precede the Consultant's start of work (including subsequent policies purchased as renewals or replacements).
    iii. Policy must allow for reporting of circumstances or incidents that might give rise to future claims.
    iv. Insurance must be maintained and evidence of insurance must be provided for at least three (3) years after completion of the contract of work.

4. Workers' Compensation and Employer's Liability Insurance

Statutory California Workers' Compensation coverage covering all work to be performed for Valley Water.
Employer Liability coverage for not less than $1,000,000 per occurrence.

<u>General Requirements</u>

With respect to all coverages noted above, the following additional requirements apply:

AMENDMENT NO. 1 TO AGREEMENT A4263A

REVISED APPENDIX FOUR
INSURANCE REQUIREMENTS

1. **Additional Insured Endorsement(s):** Consultant must provide an additional insured endorsement for Commercial General/Business Liability (for both on-going and completed operations) and Business Automobile liability coverage naming the **Santa Clara Valley Water District, its Directors, officers, employees, and agents, individually and collectively,** as additional insureds, and must provide coverage for acts, omissions, etc. arising out of the named insureds' activities and work. Other public entities may also be added to the additional insured endorsement as applicable and the Consultant will be notified of such requirement(s) by Valley Water. **NOTE:** This section does not apply to the Workers' Compensation and Professional Liability policies.

   (**NOTE:** Additional insured language on the Certificate of Insurance is **NOT** acceptable without a separate endorsement such as Form CG 20 10, CG 2033, CG 2037, or CG 2038. Editions dated 07/04 are not acceptable.)

2. **Primacy Clause:** Consultant will provide evidence (either through the Certificate of Insurance, endorsement or language in the insurance contract) that consultant's insurance is primary with respect to any other insurance which may be carried by Valley Water, its Directors, its officers, agents and employees, and Valley Water's coverage must not be called upon to contribute or share in the loss. **NOTE:** This section does not apply to the Workers' Compensation policies.

3. **Cancellation Clause**: Consultant will provide endorsements for all policies stating that the policy will not be cancelled without 30 days prior notification to Valley Water**.**

4. **Acceptability of Insurers:** All coverages must be issued by companies admitted to conduct business in the State of California, which hold a current policy holder's alphabetic and financial size category rating of not less than A- V, according to the current Best's Key Rating Guide or a company of equal financial stability that is approved by Valley Water's Risk Manager. Non-Admitted companies may be substituted on a very limited basis at the Risk Manager's sole discretion.

5. **Self-Insured Retentions or Deductibles:** Any deductibles or self-insured retentions must be declared to and approved by Valley Water. At the option of Valley Water, either: the insurer shall reduce or eliminate such deductibles or self-insured retentions as respects Valley Water, its officers, officials, employees and volunteers; or the Consultant shall provide a financial guarantee satisfactory to the Entity guaranteeing payment of losses and related investigations, claim administration, and defense expenses. Consultant agrees that in the event of a claim they will pay down any agreed upon SIR in a prompt manner as soon as bills are incurred in order to trigger the insurance related to the SIR.

6. **Subconsultants:** The Consultant shall secure and maintain or shall be responsible for ensuring that all subconsultants performing the Contract Services secure and maintain all insurance coverages appropriate to their tier and scope of work in a form and from insurance companies reasonably acceptable to Valley Water.

7. **Amount of Liability not Limited to Amount of Insurance:** The insurance procured by Consultant for the benefit of Valley Water must not be deemed to release or limit any

liability of Consultant. Damages recoverable by Valley Water for any liability of Consultant must, in any event, not be limited by the amount of the required insurance coverage.

8. **Coverage to be Occurrence Based:** Except for Professional Liability, all coverage must be occurrence-based coverage. Claims-made coverage is not allowed.

9. **Waiver of Subrogation:** Consultant agrees to waive subrogation against Valley Water to the extent any loss suffered by Consultant is covered by any Commercial General Liability policy, Automobile policy, Workers' Compensation policy described in **Required Coverages** above. Consultant agrees to advise its broker/agent/insurer and agrees to provide evidence (either through the Certificate of Insurance, endorsement or language in the insurance contract) that subrogation has been waived by its insurer.

10. Required Coverages: The required Per-Occurrence and Aggregate limits can be met using a combination of primary and excess (umbrella) coverages.

11. **Non-compliance:** Valley Water reserves the right to withhold payments to the Consultant in the event of material noncompliance with the insurance requirements outlined above.

(REMAINDER OF PAGE INTENTIONALLY LEFT BLANK)

CHECK LIST OF DOCUMENTS NEEDED

General Liability:	A.	Limits **($2,000,000)**	
	B.	Additional Insured (Endorsement)	
	C.	Waiver of Subrogation (COI, Endorsement or policy language)	
	D.	Primacy (COI, Endorsement or policy language)	
	E.	Cancellation Endorsement	

Auto Liability:	A.	Limits **($2,000,000)**	
	B.	Additional Insured (Endorsement)	
	C.	Waiver of Subrogation (COI, Endorsement or policy language)	
	D.	Primacy (COI, Endorsement or policy language)	
	E.	Cancellation Endorsement	

Umbrella:	A.	Limits ($)	
	B.	Primacy (Endorsement or policy language)	

Workers Comp:	A.	Limits **($1,000,000)**	
	B.	Waiver of Subrogation (Endorsement or policy language)	
	C.	Cancellation Endorsement	

Professional Liability:	A.	Limits **($5,000,000)**	
	B.	Cancellation Endorsement	

Appendix IV ConsultantGL2AL2PL2_rev. 7.20.20/CAS rev. 12.22.20

(REMAINDER OF PAGE INTENTIONALLY LEFT BLANK)

AMENDMENT NO. 1 TO AGREEMENT A4263A

REVISED SCHEDULE OC
REVISED ATTACHMENT ONE
FEES AND PAYMENTS

1. Total Authorized Funding.

Total payment for Services performed, to the satisfaction of Valley Water, as described in the Schedule and in all approved Task Orders will not exceed a total amount of **$1,750,000 (Not-to-Exceed Fees or NTE)**. Under no conditions will the total compensation to the Consultant exceed this NTE payment amount without prior written approval in the form of an amendment to this Agreement executed by Valley Water's Board of Directors (Board), or Chief Executive Officer, or designee, as authorized by the Board. It is understood and agreed that this total is an estimate, and the total amount of Services to be requested by Valley Water may be less. **There is no guarantee, either expressed or implied, as to the actual dollar amount that will be authorized pursuant to this Agreement.**

2. Terms and Conditions.

Payments for Services performed, as described in each Task Order, which applies to the specific Services, will be based on the following terms:

A. Valley Water will pay for Services provided by the Consultant according to the rates for professional, technical, and administrative personnel as well as materials and supplies as listed below in the Hourly Rate and Unit Rate Schedule(s).

B. The stated hourly rates are effective for the term of this Agreement unless otherwise revised as indicated. After 12 months from the date this Agreement is entered into by parties ("anniversary date"), and each 12 months thereafter, these hourly rates may be negotiated by the Consultant and Valley Water, provided Consultant submits written notice to Valley Water of Consultant's request to revise the hourly rates 90 calendar days prior to the anniversary date of this Agreement. Both parties will use as a benchmark for negotiations the percent change for the previous 12 months of the "Employment Cost Index (ECI), for total compensation for private industry workers, for the San Francisco-Oakland-San Jose, CA CSA Census region and metropolitan area (not seasonally adjusted)" as published by the U.S. Department of Labor, Bureau of Labor Statistics, or **2.5%** whichever is less. A negative index will result in rates remaining the same. Such rate revisions are subject to written approval by Valley Water's Deputy Operating Officer.

C. Reimbursable Expenses.

1. All reimbursable expenses not already covered in overhead may include, but are not limited to, mapping, rendering, printouts, leased equipment, mailing and delivery services, printing services, film and processing, plotting, and supplies. These other direct expenses as approved by Valley Water Project Manager will be billed on a monthly basis at actual cost plus 5% linked to each Agreement Task, provided that the Task total NTE amount is not exceeded. Consultant shall provide receipts for each other direct expense item(s) with monthly invoices submitted. The 5% markup will be applied only

once, either by the Consultant or by its subconsultants, subcontractors, or vendors.

2. Equipment purchased on behalf of Valley Water that costs $50 or more must receive the prior written approval of Valley Water Project Manager. All equipment purchased on behalf of Valley Water and paid for by Valley Water shall become the property of Valley Water and be delivered to Valley Water prior to expiration of this Agreement.

3. Travel expenses are reimbursed at actual costs. Travel and overnight accommodations, including per diem, required for performance of this Agreement will be paid at reasonable cost not to exceed the U.S. General Services Agency Per Diem Rates for Sunnyvale/Palo Alto/San Jose, California area, provided prior approval has been obtained from Valley Water Project Manager. For air travel, Valley Water will pay the cost of a coach class or equivalent ticket. Where air travel is required, Valley Water will pay the total cost of taxi, rideshare, public transportation, or a rental car, which may include insurance, gas, car fee, and taxes and will be paid at the actual costs incurred. Vehicle rental is limited to a compact or economy model, unless prior approval has been obtained from Valley Water Project Manager for a different type of vehicle.

4. Expenses incurred by the Consultant for Subconsultants, subcontractors and vendors, including lab services, will be reimbursed at actual cost plus 5%. Consultant shall provide invoices for all such services regardless of cost. The 5% markup will be applied only once, either by the Consultant or by its subconsultants, subcontractors, or vendors.

D. For staff with rates exceeding the rate of $[RATE LIMIT]/hr, the Consultant must obtain written approval from the District Project Manager as to the numbers of hours per task prior to that individual working on the Project. [NOT USED]

E. **Prevailing Wage Requirements**

1. The Scope of Services described in Tasks 1- 6 is considered by Valley Water to be “Public Works” requiring the payment of prevailing wages. See the Revised Standard Consultant Agreement Section Four, Fees and Payments, subsection 3. Prevailing Wages.

2. In accordance with prevailing wage laws, the Director of the California Department of Industrial Relations (Director) has ascertained the general prevailing rate of wages and employer payments for health and welfare, pension, vacation, and similar purposes available to the particular craft, classification, or type of workers employed on the Project. These rates are set forth in the latest determination obtained from the Director, which is on file in Valley Water’s Office of the Clerk of the Board of Directors and incorporated herein by reference the same as though set forth in full. The

rates are also available on the State of California Department of Industrial Relations website at http://www.dir.ca.gov.

(REMAINDER OF PAGE INTENTIONALLY LEFT BLANK)

AMENDMENT NO. 1 TO AGREEMENT A4263A

REVISED SCHEDULE OC
REVISED ATTACHMENT ONE
FEES AND PAYMENTS

HOURLY RATE SCHEDULE

CLASSIFICATION	Original Hourly/Unit Rates* Effective May 28, 2019	Annual Hourly/Unit Rates Effective October 1, 2020
Consultant: Kleinfelder		
Principal/Project Manager	$280	$287
Principal Professional	$218	$224
Senior Professional	$160	$164
Project Professional	$150	$154
Staff Professional	$140	$144
Professional/Senior Technician	$120	$123
CADD Operator	$130	$133
Administrative	$110	$113
Kleinfelder Testing Lab		
Soils Tests		
Standard Proctor		$245
Modified Proctor		$245
Proctor Check Point		$140
Proctor Oversize Correction		$75
Treated Soil Proctor		$320
Minimum and Maximum Relative Density		$425
Maximum Density by Vibratory Hammer		$550
Moisture/Density, TEX 113-E		$275
Moisture/Density, TEX 114-E		$275
California Impact, CT 216, Dry Method		$225
California Impact, CT 216, Wet Method		$225
Visual Classification		$30
Sieve Analysis, % Finer than 200 Sieve		$90
Sieve Analysis, Fine		$130
Sieve Analysis, Coarse		$130
Sieve Analysis, Coarse and Fine		$165
Hydrometer Analysis (Requires a Sieve Analysis, not included)		$185
Water Content		$25
Water Content and Dry Unit Weight		$45
Atterberg Limits, Single Point		$120
Atterberg Limits, Multiple Point		$185
Atterberg Limits, Liquid Limit Only		$115
Soil Specific Gravity		$225

REVISED SCHEDULE OC
REVISED ATTACHMENT ONE
FEES AND PAYMENTS

CLASSIFICATION	Original Hourly/Unit Rates* Effective May 28, 2019	Annual Hourly/Unit Rates Effective October 1, 2020
Soil Organic Content		$125
Fiber Content of Peat Soils		$270
Soil pH		$60
Soil Resistivity		$160
Chloride Content		$70
Sulfate Content		$60
Thermal Resistivity, Per Point		$325
Thermal Resistivity, Dry-Out Curve		$950
Standard Proctor		$245
Modified Proctor		$245
Proctor Check Point		$140
Proctor Oversize Correction		$75
Treated Soil Proctor		$320
Minimum and Maximum Relative Density		$425
Maximum Density by Vibratory Hammer		$550
Moisture/Density, TEX 113-E		$275
Moisture/Density, TEX 114-E		$275
California Impact, CT 216, Dry Method		$225
California Impact, CT 216, Wet Method		$225
Resistance R-Value		$325
Resistance R-Value of Treated Material		$375
Rock Correction for R-Value		$85
Stabilized Soil UC Strength, 1 Point *(proctor not included)*		$175
Stabilized Soil UC Strength, Set of 3		$950
CT373, 1 Lime Content, w/o Opt. Moist.		$175
CT373, 1 Lime Content		$370
CT373, 3 Lime Contents		$1,100
Eades and Grim Test (Opt. Lime Content)		$195
CTB Strength, Individual Specimen		$185
CTB Strength, Set of 3, Without Design		$420
CTB Complete Mix Design		$6,500
Pocket Penetration Value		$30
Unconfined Compressive Strength		$140

REVISED SCHEDULE OC
REVISED ATTACHMENT ONE
FEES AND PAYMENTS

CLASSIFICATION	Original Hourly/Unit Rates* Effective May 28, 2019	Annual Hourly/Unit Rates Effective October 1, 2020
Direct Shear, 1 Point		$150
Direct Shear, 3 Points		$390
Direct Shear, Residual Strength, Each Pt		$250
Consolidation without Time Rate Plots		$345
Consolidation with 2 Time Rate Plots		$450
Consolidation, All Loads with Time Rates		$630
Collapse Potential		$250
One Dimensional Swell - Wetting After Loading, Series		$300
One Dimensional Swell - Wetting After Loading		$175
One Dimensional Swell - Loading After Wetting		$475
Expansion Index		$195
Permeability, Rigid Wall		$450
Permeability, Flexible Wall		$390
Triaxial Compression, CU, 1 Point		$500
Triaxial Compression, CU, 3 Points		$1,350
Triaxial Compression, UU, 1 Point		$210
Triaxial Compression, UU, 3 Points		$630
Triaxial Compression, UU Saturated, 1 Point		$300
Triaxial Test, TEX117E, Part I		$1,950
Triaxial Test, TEX117E, Part II		$1,950
Concrete Tests		
Concrete Compression		$32
Concrete Core Compression		$85
Concrete Flexural Strength		$105
Concrete Core Thickness		$45
Concrete Laboratory Trial Batch*		$1,350
Concrete Cylinder Unit Weight		$160
Non-Shrink Grout Compression		$32
CLSM Compression		$45
RCC Compression		$65
RCC Air Content		$50
RCC Unit Weight		$50
Equipment		
Coring Machine		$85.00 /day

REVISED SCHEDULE OC
REVISED ATTACHMENT ONE
FEES AND PAYMENTS

CLASSIFICATION	Original Hourly/Unit Rates* Effective May 28, 2019	Annual Hourly/Unit Rates Effective October 1, 2020
Coring Machine with Generator		$165.00 / day
Cylinder Mold		$3.00 each
Diamond Bit Core Barrel Charge		
3" Diameter		$3.30 / inch
4" Diameter		$4.40 / inch
6" Diameter		$6.60 / inch
Hand Auger and Soil Sampler		$75.00 /day
Nuclear Soil Density/Moisture Gauge		$75.00 / day
Office Equipment		
Reproduction (Per Page)		$0.65
Report Surcharge (Per Copy)		$44.00
Bond Cost for CADD (Per Square Foot)		$0.60
CADD Workstation (Per Hour)		$15.75
Environmental Sampling and Testing Equipment		
Soil and Water		
Bailers - 1.6”		$5.25/each
2 X 6 Brass Tubes		$10.00/each
Air and Gas		
Photo Ionization Detector (Per Day)		$200.00/each
Photo Ionization Detector (Half Day)		$31.00/each
Photo Ionization Detector (Per Hour)		$21.00/each
Photo Ionization Detector (Per Month)		$895.00/each
Photo Ionization Detector (PID) Weekly		$420.00/each
Geophysical Exploration		
Seismic Geophysical Survey Equip (Per Day)		$525.00/day
Seismo/12 CH Nimbus ES-121OF (Per Day)		$590.00/day
Subconsultant: 1st Call Utility Locating		
1st 2 hours		$460.00
Each Additional Hour		$175/hour
AutoCad Sketch		$120.00/hour
Travel		$150.00/hour
Subconsultant: A3GEO, Inc		
Principal	$208.75	$213.97
Senior Professional	$170.21	$174.47

AMENDMENT NO. 1 TO AGREEMENT A4263A

REVISED SCHEDULE OC
REVISED ATTACHMENT ONE
FEES AND PAYMENTS

CLASSIFICATION	Original Hourly/Unit Rates* Effective May 28, 2019	Annual Hourly/Unit Rates Effective October 1, 2020
Project Professional	$144.52	$148.13
Staff Professional/Technician	$123.65	$126.74
Graphics	$112.39	$115.20
Administrative	$107.18	$109.86
Laboratory Testing - A3Geo, Inc		
Moisture Content (ASTM D2216)		$15.00
Moisture and Density (ASTM D2937)- 2.5-inch Diameter		$25.00
Moisture and Density (ASTM D2937)- 3.0-inch Diameter		$35.00
#200 Sieve Wash (ASTM D1140)		$80.00
Sieve w/Percent Passing #200 (ASTM D422)		$110.00
Sieve w/Hydrometer (ASTM D422)		$180.00
Plastic and Liquid (Atterberg) Limits (ASTM D 4318)		$230.00
Modified Proctor Compaction - 4” Mold (ASTM D 1557)		$260.00
Modified Proctor Compaction - 6” Mold (ASTM D 1557)		$310.00
Modified Proctor Compaction Check Point (ASTM D 1557)		$105.00
Field Vehicle and Equipment (per hour)		$15.00/hour
Subconsultant: B.A.T.S. Traffic Solutions		
Traffic Control, 2 Man 4 Hour Weekday Rate (Time above 4 hours on site charge at 8 hour rate)		$1,020.00/unit
Traffic Control, 2 Man 8 Hour Weekday Rate		$1,590.00/unit
Traffic Control, Time above 8 hours on site per traffic tech		$130.00/hour
Traffic Control, 2 Man 10 Hour Weekday Rate		$2,020.00/unit
Traffic Control, Time above 10 hours on site per traffic tech		$130.00/hour
Traffic Control, 2 Man 12 Hour Weekday Rate		$2,540.00/unit
Traffic Control, Time above 12 hours on site per traffic tech		$130.00/hour
Traffic Control, 2 Man 4 Hour Saturday Rate (Time above 4 hours on site charge at 8 hour rate)		$1,190.00/unit
Traffic Control, 2 Man 8 Hour		$1,930.00/unit

REVISED SCHEDULE OC
REVISED ATTACHMENT ONE
FEES AND PAYMENTS

CLASSIFICATION	Original Hourly/Unit Rates* Effective May 28, 2019	Annual Hourly/Unit Rates Effective October 1, 2020
Saturday Rate		
Traffic Control, Time above 8 hours on site (Saturday) per traffic tech		$140.00/hour
Traffic Control, 2 Man 10 Hour Saturday Rate		$2440.00unit
Traffic Control, Time above 10 hours on site per traffic tech		$140/hour
Traffic Control, 2 Man 12 Hour Saturday Rate		$3,000/unit
Traffic Control, Time above 12 hours on site per traffic tech		$140/hour
Traffic Control, 2 Man 4 Hour Sunday/Holiday Rate (Time above 4 hours on site charge at 8 hour rate)		$1,360/unit
Traffic Control, 2 Man 8 Hour Sunday/Holiday Rate		$2,270/unit
Traffic Control, Time above 8 hours on site per traffic tech		$150/hour
Traffic Control, 2 Man 10 Hour Sunday/Holiday Rate		$2,780/unit
Traffic Control, Time above 10 hours on site per traffic tech		$150/hour
Traffic Control, 2 Man 12 Hour Sunday/Holiday Rate		$3,380/unit
Traffic Control, Time above 12 hours on site per traffic tech		$150/hour
Traffic Control, 3 Man 8 Hour Weekday Rate		$2,225 /unit
Traffic Control, Time above 8 hours on site per traffic tech		$130/hour
Traffic Control, 3 Man 10 Hour Weekday Rate		$2,870/unit
Traffic Control, Time above 10 hours on site per traffic tech		$130/hour
Traffic Control, 3 Man 12 Hour Weekday Rate		$3,650/unit
Traffic Control, Time above 12 hours on site per traffic tech		$130/hour
Traffic Control, 3 Man 4 Hour Saturday Rate (Time above 4 hours on site charge at 8 hour rate)		$1,625/unit
Traffic Control, 3 Man 8 Hour Saturday Rate		$2,735/unit
Traffic Control, Time above 8 hours on site per traffic tech		$140/hour
Traffic Control, 3 Man 10 Hour Saturday Rate		$3,500

REVISED SCHEDULE OC
REVISED ATTACHMENT ONE
FEES AND PAYMENTS

CLASSIFICATION	Original Hourly/Unit Rates* Effective May 28, 2019	Annual Hourly/Unit Rates Effective October 1, 2020
Traffic Control, Time above 10 hours on site per traffic tech		$140/hour
Traffic Control, 3 Man 12 Hour Saturday Rate		$4,340/unit
Traffic Control, Time above 12 hours on site per traffic tech		$140/hour
Traffic Control, 3 Man 4 Hour Sunday/Holiday Rate (Time above 4 hours on site charge at 8 hour rate)		$1,880/unit
Traffic Control, 3 Man 8 Hour Sunday/Holiday Rate		$3,245/unit
Traffic Control, Time above 8 hours on site per traffic tech		$150/hour
Traffic Control, 3 Man 10 Hour Sunday/Holiday Rate		$4,010/unit
Traffic Control, Time above 10 hours on site per traffic tech		$150/hour
Traffic Control, 3 Man 12 Hour Sunday/Holiday Rate		$4,910/unit
Traffic Control, Time above 12 hours on site per traffic tech		$150/hour
Traffic Control, 4 Man 4 Hour Weekday Rate (Time above 4 hours on site charge at 8 hour rate)		$2,040/unit
Traffic Control, 4 Man 8 Hour Weekday Rate		$3,180/unit
Traffic Control, Time above 8 hours on site per traffic tech		$130/hour
Traffic Control, 4 Man 10 Hour Weekday Rate		$4,040/unit
Traffic Control, Time above 10 hours on site per traffic tech		$130/hour
Traffic Control, 4 Man 12 Hour Weekday Rate		$5,080/unit
Traffic Control, Time above 12 hours on site per traffic tech		$130/hour
Traffic Control, 4 Man 4 Hour Saturday Rate (Time above 4 hours on site charge at 8 hour rate)		$2,380/unit
Traffic Control, 4 Man 8 Hour Saturday Rate		$3,860/unit
Traffic Control, Time above 8 hours on site per traffic tech		$140/hour
Traffic Control, 4 Man 10 Hour Saturday Rate		$4,880/unit
Traffic Control, Time above 10 hours on site per traffic tech		$140/hour

REVISED SCHEDULE OC
REVISED ATTACHMENT ONE
FEES AND PAYMENTS

CLASSIFICATION	Original Hourly/Unit Rates* Effective May 28, 2019	Annual Hourly/Unit Rates Effective October 1, 2020
Traffic Control, 4 Man 12 Hour Saturday Rate		$6,000/unit
Traffic Control, Time above 12 hours on site per traffic tech		$140/hour
Traffic Control, 4 Man 4 Hour Sunday/Holiday Rate (Time above 4 hours on site charge at 8 hour rate)		$2,720/unit
Traffic Control, 4 Man 8 Hour Sunday/Holiday Rate		$4,540/unit
Traffic Control, Time above 8 hours on site per traffic tech		$150/hour
Traffic Control, 4 Man 10 Hour Sunday/Holiday Rate		$5,560/unit
Traffic Control, Time above 10 hours on site per traffic tech		$150/hour
Traffic Control, 4 Man 12 Hour Sunday/Holiday Rate		$6,760/unit
Traffic Control, Time above 12 hours on site per traffic tech		$150/hour
Standard Traffic Control Plan (3-5 business day, PDF)		$300/sheet
Rush Traffic Control Plan (1-2 business day, PDF)		$400/sheet
Bulk Traffic Control Plans (lead time varies), 5 or more sheets		$200/sheet
Engineer stamped Traffic Control Plans (lead time varies), per sheet		$650/sheet
Arrow Board/FAS, rental per day		$70/each
Arrow Board/FAS, rental per week		$190/each
Arrow Board/FAS, rental per month		$475/each
PCMS/Message Board, rental per day		$190/each
PCMS/Message Board, rental per week		$550/each
PCMS/Message Board, rental per month		$1,100/each
Light Tower, rental per day		$170/each
Light Tower, rental per week		$475/each
Light Tower, rental per month		$1,185/each
Water Wall, 6' Segment Orange (water & install not incl), rental per day		$12/each
Water Wall, 6' Segment Orange (water & install not incl), rental per week		$30/each
Water Wall, 6' Segment Orange		$75/each

REVISED SCHEDULE OC
REVISED ATTACHMENT ONE
FEES AND PAYMENTS

CLASSIFICATION	Original Hourly/Unit Rates* Effective May 28, 2019	Annual Hourly/Unit Rates Effective October 1, 2020
(water & install not incl), rental per month		
Cone, 28" reflective w/ 10 lb base, rental per day		$0.50/each
Cone, 28" reflective w/ 10 lb base, rental per week		$3/each
Cone, 28" reflective w/ 10 lb base, rental per month		$10/each
Delineator tube with base - yellow or white, rental per day		$0.5/each
Delineator tube with base - yellow or white, rental per week		$3/each
Delineator tube with base - yellow or white, rental per month		$10/each
Urbanite temporary PED barricade 6' segment, rental per day		$4/each
Urbanite temporary PED barricade 6' segment, rental per week		$10/each
Urbanite temporary PED barricade 6' segment, rental per month		$25/each
SLED TL3 crash cushion (water & install not incl), rental per day		$60/each
SLED TL3 crash cushion (water & install not incl), rental per week		$250/each
SLED TL3 crash cushion (water & install not incl), rental per month		$1,000/each
Type I barricade, rental per day		$1.50/each
Type I barricade, rental per week		$3.75/each
Type I barricade, rental per month		$12/each
Type III barricade, rental per day		$2.50/each
Type III barricade, rental per week		$6.25/each
Type III barricade, rental per month		$17/each
Barricade Light, rental per day		$1/each
Barricade Light, rental per week		$5/each
Barricade Light, rental per month		$18/each
Standard 12"x18" 'No Parking sign', purchase item		$4.50/each
Type I barricade, rental per month		$12/each
Placement fee for No parking signs and barricades		$100
Attenuator truck w/ driver - 8		$1,615/unit

AMENDMENT NO. 1 TO AGREEMENT A4263A

REVISED SCHEDULE OC
REVISED ATTACHMENT ONE
FEES AND PAYMENTS

CLASSIFICATION	Original Hourly/Unit Rates* Effective May 28, 2019	Annual Hourly/Unit Rates Effective October 1, 2020
Hour Weekday		
Time above 8 hours on site per traffic tech		$130/hour
Attenuator truck w/ driver - 8 Hour Saturday		$1,785/unit
Time above 8 hours on site per traffic tech		$140/hour
Attenuator truck w/ driver - 8 Hour Sunday		$1,955/unit
Time above 8 hours on site per traffic tech		$150/hour
Subconsultant: Bennett Trenchless Engineers		
Principal		$260/hour
Senior Project Manager		$230/hour
Senior Scientist		$215/hour
Subconsultant: Britton Exploration, Inc.		
CME 55 Track Rig with 3 person crew		$250/hour
Continuous Sampling System (Dry Core)		$250/hour
Diamond Core drilling (HQ3 wire line)		$250/hour
Support truck 4 X 4		$175/day
Premium Time (after 8 hours, nights, Sat.)		$350/hour
Prevailing Wage Rate		$350/hour
Prevailing Wage overtime		$450/hour
Per Diem		$150/per person
Subcontractor/Additional Equipment		Actual+ 5%
Subconsultant: Cerco Analytical		
Principal		$230
Senior Corrosion Engineer		$215
Corrosion Design Specialist		$185
Corrosion Project Supervisor		$180
Project Engineer		$175
Corrosion Technician		$145
Laboratory Director		$180
Chemist		$140
Field Technician		$150
Secretarial/ Word Processing		$80

REVISED SCHEDULE OC
REVISED ATTACHMENT ONE
FEES AND PAYMENTS

CLASSIFICATION	Original Hourly/Unit Rates* Effective May 28, 2019	Annual Hourly/Unit Rates Effective October 1, 2020
Quality Assurance Reports		$10.00/report
Reproduction		$0.25/copy
General Chemical Analysis - Soil		
Sample Preparation		$25
Chloride EPA 300.0, ASTM D4327, CT 422(b)		$32
Conductivity ASTM D1125M		$22
Moisture (1) ASTM D2216,CT 226(c)		$35
Nitrate-Nitrogen EPA 300.0, ASTM D4327		$32
pH: EPA 150.1, ASTM D4972, CT 643(a)		$22
pH ASTM G51		$55
Redox Potential: ASTM D1498 ASTM G200-09		$38 $75
Resistivity (1), Minimum CT 643(a)		$145
100% Saturation ASTM G57		$70
As Received ASTM G57		$65
Sulfate EPA 300.0, ASTM D4327, CT 417(b)		$32
Sulfide ASTM D4658M		$38
Subconsultant: Conetec		
Weekday mobilization & demobilization, (weekend premium +30% on mobe and rig rates),30 ton Truck		$7.50/mi.
Weekday mobilization & demobilization, (weekend premium +30% on mobe and rig rates), 25 ton truck		$7.50/mi.
Weekday mobilization & demobilization, (weekend premium +30% on mobe and rig rates), 15 ton truck		$7.50/mi.
Full day, 9-hours on-site, 30 ton truck		$3,500
Full day, 9-hours on-site, 25 ton truck		$3,500
Full day, 9-hours on-site, 15 ton truck		$4,500
Half day minimum, up to 5 hours on-site, 30 ton truck		$2,500
Half day minimum, up to 5 hours		$2,500

REVISED SCHEDULE OC
REVISED ATTACHMENT ONE
FEES AND PAYMENTS

CLASSIFICATION	Original Hourly/Unit Rates* Effective May 28, 2019	Annual Hourly/Unit Rates Effective October 1, 2020
on-site, 25 ton truck		
Half day minimum, up to 5 hours on-site, 15 ton truck		NA
Hourly rate from 5- to 9-hours (1/4-hour increments), 30 ton truck		$250
Hourly rate from 5- to 9-hours (1/4-hour increments), 25 ton truck		$250
Hourly rate from 5- to 9-hours (1/4-hour increments), 15 ton truck		NA
Hourly rate over 9 hours, 30 ton truck		$475
Hourly rate over 9 hours, 25 ton truck		$475
Hourly rate over 9 hours, 15 ton truck		$525
Prevailing Wage labor adjustment, up to 8 hours, per 2-person crew		$135/hour
Prevailing Wage labor adjustment, overtime & Saturday, per 2-person crew		$185/hour
Per diem (per 2-person crew for overnight stays on multi-day jobs)		$375/day
Concrete Coring, 4-inch dia. (limited capabilities)		$200/day & $50/core
Support truck		$175/day
Hole completion (grouting), includes consumables		$50/sounding
Groundwater sampling, includes consumables		$1/foot
Seismic shear wave velocity profiling		$15 / meter
Consumable Materials 47-lb sack of Portland cement or 50-lb sack bentonite		$20 / each
60 pound sack of AC cold patch or quickset concrete		$20/each
4-foot clear sample liners with end caps		$15/each
6-inch stainless steel sample liners with end caps		$10/each
IDW drums (rinsate, soil, etc.)		$100/each
Subconsultant: Cooper Testing Lab		
Atterberg Limits	$171	$175
Moisture & Density	$25	$26

AMENDMENT NO. 1 TO AGREEMENT A4263A

REVISED SCHEDULE OC
REVISED ATTACHMENT ONE
FEES AND PAYMENTS

CLASSIFICATION	Original Hourly/Unit Rates* Effective May 28, 2019	Annual Hourly/Unit Rates Effective October 1, 2020
Sieve	$115	$118
Bulk Sieve	$186	$191
UU Triaxial (w/saturation)	$246	$252
CU Triaxial (3 points)	$1482	$1519
Direct Shear (1 point)	$219	$224
Falling-head Permeability	$334	$342
Consolidation	$395	$405
Compaction Modified Proctor 6-inch	$327	$335
Corrosivity (Caltrans Package)	$254	$260
Subconsultant: Cuesta Geo		
Yard prep/ project setup/ de-prep tooling.		$155
Mobilization to/ from site. 2 man crew.		$155
Drilling, coring, sawcut - straight time. 2 man crew/ hourly		$285
OT/ weekend hourly		$363
Per day - Transport-support vehicle and 10k trailer/ Generator/ on board inverter.		$175
Per day - Canycom track mounted transport		$65
Sacks cement		$17
Rapid set/ black dye		$26
Shelby Tubes		$48
55 gallon drum		$94
Visqueen roll 20' x 100'		$205
Type I Barricades, daily		$0.45
Type I Barricades, weekly		$2.50
Type I Barricades, monthly		$8.00
CMS Boards, daily		$160
CMS Boards, weekly		$500
CMS Boards, monthly		$1,200
Type I Barricades w/Light, daily		$0.65
Type I Barricades w/Light, weekly		$3.50
Type I Barricades w/Light, monthly		$10
Arrowboards, daily		$50
Arrowboards, weekly		$200
Arrowboards, monthly		$500
Type 3 Barricade, daily		$2.00

AMENDMENT NO. 1 TO AGREEMENT A4263A

REVISED SCHEDULE OC
REVISED ATTACHMENT ONE
FEES AND PAYMENTS

CLASSIFICATION	Original Hourly/Unit Rates* Effective May 28, 2019	Annual Hourly/Unit Rates Effective October 1, 2020
Type 3 Barricade, weekly		$8.00
Type 3 Barricade, monthly		$25
Type 3 Barricade w/Light, daily		$3.00
Type 3 Barricade w/Light, weekly		$10
Type 3 Barricade w/Light, monthly		$35
Beacons w/Stand, daily		$15
Beacons w/Stand, weekly		$65
Beacons w/Stand, monthly		$100
Low Profile Barricade w/2 Lights (Airport), daily		NA
Low Profile Barricade w/2 Lights (Airport) , weekly		$29
Low Profile Barricade w/2 Lights (Airport) , monthly		$45
Channelizer Barrel, daily		$3.00
Channelizer Barrel, weekly		$10
Channelizer Barrel, monthly		$30
Waterwall 6', daily		NA
Waterwall 6', weekly		$20
Waterwall 6', monthly		$50
Radar Trailer, daily		$100
Radar Trailer, weekly		$250
Radar Trailer, monthly		$600
Waterwall 6' With Fence, daily		NA
Waterwall 6' With Fence, weekly		$30
Waterwall 6' With Fence, monthly		$60
Crowd Control Barricades (price per 6ft section), daily		$3.00
Crowd Control Barricades (price per 6ft section), weekly		$10
Crowd Control Barricades (price per 6ft section) , monthly		$30
Flagger Joe (Flagging Station) Each, daily		$25
Flagger Joe (Flagging Station) Each, weekly		$75
Flagger Joe (Flagging Station) Each, monthly		$200
Traffic Cones 28", daily		$0.45
Traffic Cones 28", weekly		$2.50
Traffic Cones 28", monthly		$8.00
Flagger Joe (Flagging Station) Set, daily		$35
Flagger Joe (Flagging Station) Set, weekly		$100

REVISED SCHEDULE OC
REVISED ATTACHMENT ONE
FEES AND PAYMENTS

CLASSIFICATION	Original Hourly/Unit Rates* Effective May 28, 2019	Annual Hourly/Unit Rates Effective October 1, 2020
Flagger Joe (Flagging Station) Set, monthly		$350
Delineator w/Base, daily		$0.45
Delineator w/Base, weekly		$2.50
Delineator w/Base, monthly		$8.00
Rumble Strips (3 Piece Array), daily		$65
Rumble Strips (3 Piece Array), weekly		$250
Rumble Strips (3 Piece Array), monthly		$750
Delineator Base, daily		$0.25
Delineator Base, weekly		$1.00
Delineator Base, monthly		$3.00
Automated Flaggers/Traffic Signals, daily		Call for Price
Automated Flaggers/Traffic Signals, weekly		Call for Price
Automated Flaggers/Traffic Signals, monthly		Call for Price
Roll Up Sign w/Flags, daily		$3.50
Roll Up Sign w/Flags, weekly		$15
Roll Up Sign w/Flags, monthly		$45
SLED-TL2, daily		NA
SLED-TL2, weekly		$195
SLED-TL2, monthly		$450
Sign Stand, daily		$3.50
Sign Stand, weekly		$15
Sign Stand, monthly		$45
SLED-TL3, daily		NA
SLED-TL3, weekly		$250
SLED-TL3, monthly		$750
Aluminum Sign Small (35" and Under) (In Stock), daily		$2.00
Aluminum Sign Small (35" and Under) (In Stock), weekly		$6.00
Aluminum Sign Small (35" and Under) (In Stock), monthly		$18
Crash Cushion Barrels TS-41, daily		NA
Crash Cushion Barrels TS-41,		$125

REVISED SCHEDULE OC
REVISED ATTACHMENT ONE
FEES AND PAYMENTS

CLASSIFICATION	Original Hourly/Unit Rates* Effective May 28, 2019	Annual Hourly/Unit Rates Effective October 1, 2020
weekly		
Crash Cushion Barrels TS-41, monthly		$525
Aluminum Sign Large (36" and Up) (In Stock), daily		$4.00
Aluminum Sign Large (36" and Up) (In Stock), weekly		$12
Aluminum Sign Large (36" and Up) (In Stock), monthly		$36
Crash Cushion Barrels TS-11, daily		NA
Crash Cushion Barrels TS-11, weekly		$100
Crash Cushion Barrels TS-11, monthly		$475
*Crash Cushion Barrels, Waterwall, & Absorbs do not include setup and filling. *Delivery fee TBD based on job location, quantity, weekend and/or night deliveries *Delivery and Pick Up charges apply to all orders Delivered or Picked Up *There is $50 Minimum on all rental orders **(No Exceptions)**		
Subconsultant: Exploration Geoservices		
Drill Rig w/2-man Crew (On Site)	$215/hour	$225/hour
Drill Rig w/2-man Crew (Travel)	$215/hour	$322/hour
2-man Crew Only (Yard Prep/Deprep)		$240/hour
Premium-Time Surcharge (See Below)		$341/hour
Mud Rotary		$128/day
Support Truck (Daily Rental + Hourly Travel Surcharge)		$92/day
Low-Overhead Drill		$82/day
2-Ton Flatbed Truck		$72/day
Premium-time surcharge - OT		$82 (Hr>8 Day; Nite; Hr<8 Sat) $165 (Hr>12 Day; Hr>8 Sat/Nite; All Sun)
Per Diem		$385.00
Prevailing Wage Job		Base Surcharge = S135/Hr; Overtime Extra=$98/Hr
Certified payroll report and associated compliance documents		$385/JOB
ENVIRONMENTAL JOB (Requires Hazmat Certs, Level-C Safety Eqp, Steam-Cleaned Augers, Etc.)		$100/Day

AMENDMENT NO. 1 TO AGREEMENT A4263A

REVISED SCHEDULE OC
REVISED ATTACHMENT ONE
FEES AND PAYMENTS

CLASSIFICATION	Original Hourly/Unit Rates* Effective May 28, 2019	Annual Hourly/Unit Rates Effective October 1, 2020
Subconsultant: Geotech Utility Locating		
One Man Crew		
First Hour Onsite	$310	$310
Every Additional Hour	$155	$155
Prevailing Wage One Man Crew		
Prevailing Wage - First Hour onsite		$380
Prevailing Wage - Additional Hour		$190
Two Man Crew		
First hour on site		$400
Every additional hour		$200
Prevailing Wage Two Man Crew		
First hour on site		$450
Every additional hour		$225
CAD Drafting	$145	$145
Travel, per hour (Only applies outside of Bay Area Locations)	$125	$125
Subconsultant: Gregg Drilling LLC		
Mud Rotary Drill Rig (Fraste FS400/Gefco) - 3-person crew		$670/hour
Mud Rotary Drill Rig (Fraste Multidrill XL) - 2-person crew		$495/hour
Truck-Mounted Hollow Stem Augers - 2-person crew		$420/hour
Truck-Mounted Direct Push Rig - 1-person crew		$210/hour
SONIC Drill Rig - 3-person crew		$650/hour
Track-Mounted Auger/Direct Push Rig - 2-person crew		$300/hour
Truck-Mounted Development Rig - 1-person crew		$190/hour
Air Vacuum Rig - 2-person crew		$225/hour
Truck-mounted 30 Ton CPT Rig - 2-person crew, Cone Penetrometer Testing		$385/hour
Other Labor Costs		
Additional Technician (extra helper) ADD:		$75/man/hour
Premium Time >8 hours per day, nights, Saturday ADD:		$50/man/hour

AMENDMENT NO. 1 TO AGREEMENT A4263A

REVISED SCHEDULE OC
REVISED ATTACHMENT ONE
FEES AND PAYMENTS

CLASSIFICATION	Original Hourly/Unit Rates* Effective May 28, 2019	Annual Hourly/Unit Rates Effective October 1, 2020
Premium Time Sunday ADD:		$75/man/hour
Level C Protection (per day or portion) ADD:		$100/man/hour
Daily Crew Travel When Rig is Left on Site		$90/man/hour
Per Diem		$250/man/day
Project Management		$110/hour
Project Assistant		$70/hour
Admin Assistant		$55/hour
Equipment		
SPT Energy Calibration		$2,000/day
Steam cleaner		$150/day
Mud system (mud rotary as needed)		$225/day
Support truck (pick-up)		$150/day
Support truck (stake-bed)		$200/day
Support truck (water-truck)		$400/day
Air Compressor		$450/day
Portable water trailer		$150/day
Bobcat/Forklift		$300/day
Bobcat/Forklift Delivery		$75/hour
Grout Pump on Trailer		$200/day
Horiba Meter		$95/day
Submersible Pump		$175/day
Materials		
1/4" or 1/2" Poly Tubing		$1/ft.
Asphalt Patch		$25/bag
Bentonite Pellets		$60/bucket
Bentonite Pellets (TR30)		$95/bucket
Bentonite Chips		$20/bag
Bentonite Powder		$30/bag
Bollards		$95/each
Cement - Portland Type II (50 lb bag)		$15/bag
Concrete - Ready Mix		$12/bag
Concrete - Quickset		$25/bag
Core Box - Plastic/Cardboard		$30/each
Core Box - Wooden		$75/each
Disposable Bailers		$25/each
Disposable Tips		$30/each
Drums - 55 Gallon		$65/each
Drill mud		$30/bag
Easy Mud 5-gal		$250/bucket
Easy Mud Gold 10lb		$250/bucket

AMENDMENT NO. 1 TO AGREEMENT A4263A

REVISED SCHEDULE OC
REVISED ATTACHMENT ONE
FEES AND PAYMENTS

CLASSIFICATION	Original Hourly/Unit Rates* Effective May 28, 2019	Annual Hourly/Unit Rates Effective October 1, 2020
Filter Sand (50lb)		$18/bag
Sample Liners & Caps - Brass		$10/each
Sample Liners & Caps - Stainless		$10/each
Sample Liners & Caps Macro Core		$10/each
Shelby/Pitcher Tube & Caps		$75/each
Soda Ash 50lb		$25/bag
Standpipe		$250/each
Traffic Cones		$30/each
Vapor Probe Implant - PVC		$15/each
Vapor Probe Implant - Stainless		$60/each
Visqueen (large roll)		$150/roll
Well Box - 8-inch		$125/each
Well Box - 12-inch		$150/each
Wood Plug		$25/each
2" PVC Screen 0.010" or 0.020"		$10/ft.
2" PVC Blank casing		$5.00/ft.
2" PVC threaded end cap		$10/each
2" PVC slip cap or coupling		$5/each
2" Locking Cap		$35/each
4" PVC Screen 0.010" or 0.020"		$15/ft.
4" PVC Blank casing		$12/ft.
4" PVC threaded end cap		$15/each
4" PVC slip cap or coupling		$10/each
4" Locking Cap		$45/each
3/4" PVC Screen 0.010" or 0.020"		$6/ft.
3/4" PVC Blank casing		$4/ft.
3/4" PVC fittings		$5/each
Slope Indicator Pipe (2.75")		$18/ft.
Slope Indicator Pipe Bottom Cap		$25/each
Slope Indicator Pipe Top Cap		$10/each
Subconsultant: JDH Corrosion		
Principal Corrosion Engineer		$230
Senior Corrosion Engineer		$215
Corrosion Design Specialist		$185
Corrosion Project Supervisor		$180
Project Engineer		$175
Corrosion Technician		$145
Field Technician		$125
Drafting/AutoCad		$115.00
Word Processing/Computer		$800
Reproduction, Outside Testing & Consulting Services		Cost + 5%

AMENDMENT NO. 1 TO AGREEMENT A4263A

REVISED SCHEDULE OC
REVISED ATTACHMENT ONE
FEES AND PAYMENTS

CLASSIFICATION	Original Hourly/Unit Rates* Effective May 28, 2019	Annual Hourly/Unit Rates Effective October 1, 2020
Subconsultant: Lettis Consultants International, Inc.		
Sr. Principal I	$246	$252
Principal	$192	$197
Senior	$154	$158
Sr. Project	$132	$135
Project	$108	$111
Sr. Staff	$89	$91
Staff	$71	$73
Project Support	$94	$96
Subconsultant: McCampbell Analytical, Inc.		
8015B/ m		$100
8015D		$84
8015Bm		$67
8015B / 8021B		$50
Subconsultant: Pitcher Services, LLC		
Mud Rotary Truck Drill- 2 person crew		**$/9hr/Day**
Drilling time - Mud Rotary		$3,600
Drilling time- Mud Rotary w/mud conditioning system		$4,000
Standby Time & Development Time		$3,600
Mob/Demob		$400/hr
Overtime (2 man crew)		$540/hr
Transportation (when rig can be left on-site)		$420
Mud Rotary Track Drill - 2 person crew		$/9hr/Day
Drilling time - Mud Rotary		$4,000
Standby Time & Development Time		$4,000
Mob/Demob		$475/hr
Overtime any hrs over 9 (2man crew)		$580/hr
Transportation (when rig can be left on-site)		$420/hr
Overtime Surcharge Rates (2 person crew)		
Night Shift (Premium Time Surcharge)		$140/hr

AMENDMENT NO. 1 TO AGREEMENT A4263A

REVISED SCHEDULE OC
REVISED ATTACHMENT ONE
FEES AND PAYMENTS

CLASSIFICATION	Original Hourly/Unit Rates* Effective May 28, 2019	Annual Hourly/Unit Rates Effective October 1, 2020
Saturday Shift		$140/hr
Sunday Shift		$280/hr
Air Vacuum Rig - 2 person crew		
Rig Time		$350hr
Standby Time		$350/hr
Mob/Demob		$350hr
Footage Rates		
Drilling Additives (Normal Conditions 5" boring)		$2.50/ft
Portland Cement Grout (5" boring)		$3.50/ft
HQ3 Coring Surcharge		$12.00/ft
101 GeoBarrel Surcharge		$12.00/ft
PQ Coring Surcharge		$28.00/ft
Other Labor Costs		
Additional Technician (extra helper)		ADD: $80/hr.
Premium time for after 8 hours per day, week-end work, night work & holidays		ADD: $70/man/hr.
Level C Protection (per day or portion)		ADD: $150/man/day
Per Diem Caltrans Rate:		TBD
Prevailing Wage or Certified Payroll Surcharge		$100/man day
Transportation per additional tech		$200/man day
Repair costs		
Waste barrel repair		$100/each
Equipment		
Decon Station		$400/day
Mud system (mud rotary as needed)		$500/day
Support truck (pick-up)		$250/day
Support truck (stake bed)		$400/day
Support truck (Lift Gate)		$400/day
Support Track (Morooka)		$500/day
Support truck (water-truck)		$400/day
Materials		
Quik-Gel drilling mud 50lb		$30/bag
Soda Ash 50lb		$25/bag
Easy Mud 5-gal		$250/bucket
Easy Mud Gold 10lb		$250/bucket
N-Seal 30lb		$150/bag
Filter Sand		$13/bag
Coated Bentonite Pellets		$120/bucket
Bentonite Chips		$22/bag

REVISED SCHEDULE OC
REVISED ATTACHMENT ONE
FEES AND PAYMENTS

CLASSIFICATION	Original Hourly/Unit Rates* Effective May 28, 2019	Annual Hourly/Unit Rates Effective October 1, 2020
Bentonite Powder		$30/bag
Ready Mix Concrete 60lb		$15/bag
Portland Cement Type II 47lb		$15/bag
Asphalt Patch		$30/bag
Quickset Concrete		$18/bag
Wood Plug		$25/each
7" Traffic Rated Monitoring Well Boxes		$100/each
8" Traffic Rated Monitoring Well Boxes		$120/each
12" Traffic Rated Monitoring Well Boxes		$140/each
Anodized Standpipe		$200/each
Plastic Liners in 2.5' sections		$12/ft
Cardboard core Boxes		$22/box
Wooden Core Boxes		$55.00/box
PVC core trays		$5/tray
DOT 17-H 55 Gal. Drums		$65/each
5-gallon bucket		$15/each
Brass Sleeves & Caps (6" long)		$8/each
Stainless Steel Sleeves & Caps (6" long)		$8/each
Acetate Liners for Macro Core		$15/each
Visqueen (large roll)		$150/roll
Disposable Tips		$25/each
1/4" or 1/2" Tubing		$0.50/ft
3" Pitcher or Shelby Tube 36" long		$45/each
Teflon Squares (pack of 100)		$100/pack
PVC Schedule 40		
2" PVC Screen 0.010" or 0.020"		$8.00/ft
2" PVC Blank casing		$6.00/ft
2" PVC threaded end cap		$12/each
2" PVC slip cap or coupling		$6/each
2" Locking Cap		$35/each
4" PVC Screen 0.010" or 0.020"		$16.00/ft
4" PVC Blank casing		$12/ft
4" PVC threaded end cap		$200/each
4" PVC slip cap or coupling		$12/each
4" Locking Cap		$50/each
3/4" PVC Screen 0.010" or 0.020"		$5/ft
3/4" PVC Blank casing		$4/ft
3/4" PVC fittings		$3/each

AMENDMENT NO. 1 TO AGREEMENT A4263A

REVISED SCHEDULE OC
REVISED ATTACHMENT ONE
FEES AND PAYMENTS

CLASSIFICATION	Original Hourly/Unit Rates* Effective May 28, 2019	Annual Hourly/Unit Rates Effective October 1, 2020
Subconsultant: Taber Drilling, CPT		
Truck-Mounted Drill (2-Man Crew+Typical Support Equipment)	$260/Hr	$260/Hr
Premium Truck-Mounted Drill (Over 8 Hours Daily)	$310/Hr	$310/ Hr
Track-Mounted Drill (2-Man Crew + Typical Support Equipment)	$300/Hr	$300/Hr
Premium Track-Mounted Drill (Over 8 hours Daily)	$350/Hr	$350/Hr
Additional Drill Helper (Any Drill)	$60/Hr	$60/Hr
Premium Additional Drill Helper (Any Drill)		$70/Hr
Drill Crew and Equipment Standby or Daily Travel (Any Drill)	$225/Hr	$225/ Hr
CPT Testing, Grouted, 20-Ton (Includes Data Report)	$16/LF	$16/LF
CPT Testing, Seismic Cone, Grouted, 20-Ton (Includes Data Report)	$19/LF	$19/LF
CPT On Site Move / Set-Up and Standby		$275/Hr
Over-Water Exploration (Barge; 3-Man Crew + Support Equipment)		$600/Hr
PQ Triple Tube Diamond Bit Charge (Supplemental to Hourly Drill Rates)		$15/LF
HQ, NQ, Nx, BQ Triple Tube Diamond Bit Charge (Supplemental Rate)		$12/LF
Cuttings Disposal (By 55-Gallon DOT Drum; Non-Hazardous Only)		$150/Bbl
Cuttings Disposal (Cuttings in Tank or Bin; Non-Hazardous Only)		$2.50/Gal
Polaris 6X6 All-Terrain Support Vehicle (Billed Only as Used)		$125/Dy
Per Diem Expense for Drill or CPT Crew Members (Minimum Rate)		$165/Dy
SPT Energy Analysis (Site Specific, Includes Report but Not Travel)		$2,500/LS
Job Materials (Cement, Bentonite, Liners, Plastic Sheeting, etc.)		Cost + 5%

AMENDMENT NO. 1 TO AGREEMENT A4263A

REVISED SCHEDULE OC
REVISED ATTACHMENT ONE
FEES AND PAYMENTS

CLASSIFICATION	Original Hourly/Unit Rates* Effective May 28, 2019	Annual Hourly/Unit Rates Effective October 1, 2020
Outside Support Services (Equipment Rental, Fencing, Traffic Control, etc.)		Cost + 5%

*Additional subconsultants were added through a Valley Water internal administrative process after original Agreement was executed.

(REMAINDER OF PAGE INTENTIONALLY LEFT BLANK)

AMENDMENT NO. 1 TO AGREEMENT A4263A

REVISED SCHEDULE OC
REVISED ATTACHMENT THREE
CONSULTANTS KEY STAFF AND SUBCONSULTANTS

1. Consultant's key staff assigned to the Project are as follows:

Team Member	Classification	Project Role	Contact Information
Glen Gorski	Project Manager	Project Delivery Manager/Construction Management/Plans and Specifications	380 N 1st, Suite A San Jose, CA 95112 Phone: 510-459-6297 GGorski@kleinfelder.com
Mark Fuhriman	Senior Principal Professional	Peer Review/ Geotechnical Engineering/ Foundations	1330 Broadway, Suite 1200 Oakland, CA 94612 Phone: 510-628-9000 MFuhriman@kleinfelder.com
Ken Sorensen	Senior Principal Professional	Peer Review / Underground Utilities	2882 Prospect Park Dr. Rancho Cordova, CA 95670 Phone: 916-366-1700 KSorensen@kleinfelder.com
Joseph Zilles	Senior Principal Professional	Hydrology / Floodplain Engineering	2882 Prospect Park Dr. Rancho Cordova, CA 95670 Phone: 916-366-1700 JZilles@kleinfelder.com
Rebecca Money	Principal Professional	Task Manager / Floodwalls, Levees & Retaining Walls	2882 Prospect Park Dr. Rancho Cordova, CA 95670 Phone: 916-366-1700 BMoney@kleinfelder.com
William Godwin	Principal Professional	Engineering Geology	75 E. Santa Clara Street, 6th Fl. San Jose, CA 95113 Phone: 408-595-3275 BGodwin@kleinfelder.com
Renie Yuen	Senior Professional	Task Manager / Field Exploration	1330 Broadway, Suite 1200 Oakland, CA 94612 Phone: 510-628-9000 RYuen@kleinfelder.com
Sharon Gulliford	Staff Professional	Project Controls	2882 Prospect Park Dr. Rancho Cordova, CA 95670 Phone: 916-366-1700 SGulliford@kleinfelder.com

Zia Zafir	Principal Professional	Seismic Engineering	2882 Prospect Park Dr. Rancho Cordova, CA 95670 Phone: 916-366-1700 ZZafir@kleinfelder.com
Alex Wright	Professional	Seismic Engineering	2882 Prospect Park Dr. Rancho Cordova, CA 95670 Phone: 916-366-1700 AWright@kleinfelder.com
Aaron Kidd	Professional/ Senior Technician	KLF Laboratory	2601 Barrington Court Hayward, CA 94545 Phone: 925-225-4580 AKidd@kleinfelder.com

2. The following Subconsultants are authorized to perform services pursuant to this Agreement:

Firm	Project Role	Contact Information
1st Call Utility Locating	Utility Locating	Sedar Tas 4420 Nevin Avenue Richmond, CA 94805 (415) 235-8410 info@1stcallutilitylocating.com
A3GEO, Inc.	Geotechnical Engineering, Engineering Geology	Dona Mann 1331 Seventh Street, Unit E Berkeley, CA 94710 Office: (510) 705-1664 Cell: (415) 425-0247 dona@a3geo.com
Bay Area Traffic Solutions, Inc.	Traffic Control	Justin Bottoms 44800 Industrial Drive Fremont, CA 94538 (916) 257-9561 jbottoms@gobats.net
Bennett Trenchless Engineers	Geotechnical Engineering, Engineering Geology	1082 Sunrise Avenue, Suite 100 Roseville, CA 95661 (916) 783-4100 mail@ben-en.com

Britton Exploration	Drilling	Paul Britton 23051 Evergreen Lane Los Gatos, CA 95033 (408) 355-5781 paul@brittonexploration.com
CERCO Analytical, Inc.	Lab	Darlene Langford 1100 Willow Pass Court, Suite A Concord, CA 94520-1006 (925) 462-2771 darlene@cercoanalytical.com
Conetec	Geotechnical, Environmental, and Marine Site Investigation	John Rogie 820 Aladdin Avenue San Leandro, CA 94577 (510) 357-3677 jrogie@conetec.com
Cooper Testing Lab	Lab	Philip Jackey 937 Commercial Street Palo Alto, CA 94303 (650) 213-8436 philip@coopertestinglabs.com
Cuesta Geo, Inc.	Drilling	Chris Krieg 2709 Kapalua Court Fairfield, CA 94535 (925) 872-1248 kriegchris@sbcglobal.net
D & M Traffic Services	Rentals for Traffic Control	Gabe Magdaleno 845 Reed Street Santa Clara, CA 95050 (408) 436-1127 gabem@dmtraffic.com
Exploration Geoservices, Inc.	Drilling	John Collins 1535 Industrial Avenue San Jose, CA 95112 (408) 280-6822 john@explorationgeo.com
Geotech Utility Locating LLC	Utility Locating	Jennifer Yolosan P.O. Box 6873 Morage, CA 94570 (510) 235-4144 Jyolosan@geotechlocating.com

Gregg Drilling, LLC	CPT, Drilling	Tim Boyd or Chris Christensen 2726 Walnut Avenue Signal Hill, CA 90755 (562) 427-6899 tboyd@greggdrilling.com
JDH Corrosion Consultants, Inc.	Corrosion Engineering	Brendon Hurley 1100 Willow Pass Court Concord, CA 94520 (925) 927-6630 bhurley@jdhcorrosion.com
Lettis Consultants International, Inc.	Engineering Geology	John Baldwin 1000 Burnett Avenue, Suite 350 Concord, CA 94520 Office: (925) 482-0360 (ext. 202) Cell: (925) 818-4651 baldwin@lettisci.com
McCampbell Analytical	Lab/Testing	Beverlyn Madrigal 1534 Willow Pass Road Pittsburg, CA 94565 (925) 252-9262 Beverlyn.Madrigal@mccampbell.com
Pitcher Services, LLC	CPT, Drilling	Terry Shewchuk 218 Demeter Street East Palo Alto, CA 94303 (650) 328-8910 tshewchuk@pitcherservicesllc.com
Taber Drilling	CPT, Driller	Brian Young 536 Galveston Street West Sacramento, CA 95691 (530) 304-3191 byoung@taberdrilling.com

(REMAINDER OF PAGE INTENTIONALLY LEFT BLANK)

AMENDMENT NO. 1 TO AGREEMENT A4264A
BETWEEN THE SANTA CLARA VALLEY WATER DISTRICT
AND CAL ENGINEERING & GEOLOGY, INC.

This Amendment No. 1 (Amendment), effective as of the date it is fully executed by the Parties, amends the terms and conditions of the Standard On-Call Consultant Agreement A4264A (Agreement) dated May 28, 2019, between SANTA CLARA VALLEY WATER DISTRICT (Valley Water) hereinafter called Valley Water and CAL ENGINEERING & GEOLOGY, INC., (Consultant), collectively, the Parties.

RECITALS

WHEREAS, the Consultant is currently providing professional on-call geotechnical engineering services for Valley Water in support of the Capital Improvement Program projects in all phases of development including planning, design, and construction, and in support of ongoing operations and maintenance work; and

WHEREAS, the Parties desire to increase the not-to-exceed fee to provide funds for Consultant to continue performing on-call geotechnical engineering services at the consistently higher than originally anticipated current volume and level of necessity experienced to date; to update the Standard On-Call Consultant Agreement language; increase the task order limit; and incorporate administrative changes.

NOW, THEREFORE, in consideration of the mutual promises and agreements stated herein and notwithstanding anything to the contrary stated in the Agreement, District and Consultant hereby agree to amend the Agreement as follows:

1. The Standard Consultant Agreement, Section Twelve, Miscellaneous Provisions, is amended to state as follows:

   "19. Choice of Law and Venue

   The Parties agree that this Agreement is to be governed, construed, and enforced in accordance with the laws of the State of California. The Parties also agree that the venue of any litigation arising out of or connected with this Agreement will lie exclusively in the state trial court or Federal District Court located in Santa Clara County in the State of California, and the Parties consent to jurisdiction over their persons and over the subject matter of any such litigation in such courts, and consent to service of process issued by such courts.

   20. No Third-Party Beneficiaries

   Nothing in this Agreement, whether express or implied, shall be construed to give any person or entity, other than the Parties hereto, any legal or equitable right, remedy, or claim under or in respect of this Agreement or any covenants, conditions, or provisions contained herein.

   21. Severability

   If a court of competent jurisdiction holds any provision of this Agreement to be illegal, unenforceable, or invalid in whole or in part for any reason, the validity and enforceability of the remaining provisions, or portions of them, will not be

affected, unless an essential purpose of this Agreement would be defeated by the loss of the illegal, unenforceable, or invalid provision.

22. Debt Limitation

This Agreement is contingent on the appropriation of sufficient funding by Valley Water for the services described in this Agreement. Valley Water is subject to laws or policies which limit its ability to incur debt in future years. Nothing in this Agreement shall constitute an obligation of future legislative bodies of Valley Water to appropriate funds for purposes of this Agreement.

23. Appendices

The following listed Appendices are incorporated herein by this reference as though set forth in full:

Revised Appendix One to the Revised Standard On-Call Consultant Agreement - Additional Legal Terms (REVISED)
Appendix Two to the Revised Standard On-Call Consultant Agreement - Dispute Resolution (UNCHANGED)
Appendix Three to the Revised Standard On-Call Consultant Agreement - Task Order Template (UNCHANGED)
Revised Appendix Four to the Revised Standard On-Call Consultant Agreement - Insurance Requirements (REVISED)

24. Schedules and Attachments. Schedule OC, Scope of Services, and the following listed Attachments are incorporated herein by this reference as though set forth in full:

Revised Attachment One to Schedule OC - Fees and Payments (REVISED)
Attachment Two to Schedule OC - Schedule of Completion (UNCHANGED)
Revised Attachment Three to Schedule OC - Consultant's Key Staff and Subconsultants (REVISED)
Attachment Four to Schedule OC - Reference Materials (UNCHANGED)"

2. Appendix One to the Standard On-Call Consultant Agreement, Additional Legal Terms is amended as set forth in the Revised Appendix One to the Revised Standard On-Call Consultant Agreement, Additional Legal Terms, attached hereto and incorporated herein by this reference.

3. Appendix Four to the Standard On-Call Consultant Agreement, Insurance Requirements, is amended as set forth in the Revised Appendix Four to the Standard On-Call Consultant Agreement, Insurance Requirements, attached hereto and incorporated herein by this reference.

4. Schedule OC - Scope of Services, Section 1. is amended to state as follows:

"**1. REPRESENTATIVES**

A. Valley Water Valley Water's representatives are as listed below. Unless otherwise provided in this Agreement, all correspondence to Valley Water shall be addressed to the Valley Water's Project Manager.

Madhu Thummaluru (Valley Water Project Manager)
Senior Engineer
Dam Safety Program and Project Delivery Unit
Santa Clara Valley Water District
5750 Almaden Expressway
San Jose, CA 95118-3638

Phone: 408-630-2256
Email: mthummaluru@valleywater.org

Hemang Desai (Valley Water Unit Manager)
Dam Safety Program Manager
Dam Safety Program and Project Delivery Unit
Santa Clara Valley Water District
5750 Almaden Expressway
San Jose, CA 95118-3638

Phone: 408-630-3017
Email: hdesai@valleywater.org

Rechelle Blank (Division Deputy Operating Officer)
Watersheds Design and Construction Division
Santa Clara Valley Water District
5750 Almaden Expressway
San Jose, CA 95118-3638

Phone: 408-630-2615
Email: rblank@valleywater.org

B. The Consultant's Project Manager is as listed below. All Valley Water questions and correspondence pertaining to this Agreement shall be referred to the Consultant's Project Manager.

Dan Peluso (Consultant Project Manager or CPM)
Cal Engineering & Geology, Inc.
Senior Principal Engineer
6455 Almaden Expwy., #100, San José, CA 95120

Phone: (925) 433-5018
Email: dpeluso@caleng.com

C. The Consultant's Principal Officer for this Agreement is as listed below. As per the Agreement, Section Twelve, subsection 18. Notices, all notices pertaining to this Agreement must be submitted to the Consultant's Principal Officer.

Daniel J. Peluso (Consultant Principal Officer)
Cal Engineering & Geology, Inc.
Senior Principal Engineer
6455 Almaden Expwy., Suite 100,
San José, CA 95120

Phone: (925) 433-5018
Email: dpeluso@caleng.com"

5. Attachment One to Schedule OC, Fees and Payments is amended as set forth in the Revised Attachment One to Revised Schedule OC, Fees and Payments, attached hereto and incorporated herein by this reference.

6. Attachment Three to Schedule OC, Consultants Key Staff and Subconsultants is amended as set forth in the Revised Attachment Three to Revised Schedule OC, Consultants Key Staff and Subconsultants, attached hereto and incorporated herein by this reference.

7. All other terms and conditions of the Agreement not otherwise amended as stated herein remain in full force and effect.

IN WITNESS WHEREOF, THE PARTIES HAVE SET FORTH BELOW THEIR CONSENT TO THE TERMS AND CONDITIONS OF THIS AMENDMENT NO. 1 TO AGREEMENT A4264A THROUGH THE SIGNATURES OF THEIR DULY AUTHORIZED REPRESENTATIVES.

SANTA CLARA VALLEY WATER DISTRICT
Valley Water

By: _____

Chair, Board of Directors

Date: _____

ATTEST:

_____
Michele L. King, CMC
Clerk, Board of Directors

CAL ENGINEERING & GEOLOGY, INC.
Consultant

By: _____
Daniel J. Peluso
Senior Principal Engineer

Date: _____

Consultant's Address:

6455 Almaden Expressway, #100
San José, CA 95120

(REMAINDER OF PAGE INTENTIONALLY LEFT BLANK)

AMENDMENT NO. 1 TO AGREEMENT A4264A

REVISED APPENDIX ONE
ADDITIONAL LEGAL TERMS

1. Conflict of Interest for Future Services

Consultant, Consultant's parent company, Consultant's subsidiaries, or any affiliated entity sharing substantially similar ownership of or control with Consultant shall not submit a proposal:

A. For any agreement to be awarded for planning, design, construction management or construction of any project that is related to the Services provided pursuant to this Agreement;

B. In response to any request for proposal or District solicitation developed or prepared by or with the assistance of Consultant, Consultant's parent company, Consultant's subsidiaries, or any affiliated entity sharing substantially similar ownership of or control with Consultant; or

C. For any single or sole source products/services related to the Services pursuant to this Agreement, or have a financial stake in any single or sole source products/services resulting from this Agreement.

2. Dispute Resolution

If a dispute occurs between the Parties as a result of this Agreement, then the Parties agree to use the Dispute Resolution process outlined in the Revised Standard On-Call Consultant Agreement, Appendix Two Dispute Resolution.

3. Small Business Enterprise (SBE) Participation

This Agreement provides for the Consultant to include California Department of General Services certified Small/Micro Businesses in the performance of the Services, estimated to be **60%** or more of the Total Not-to-Exceed Fees stated in the Revised Standard On-Call Consultant Agreement, Revised Schedule OC, Revised Attachment One Fees and Payments, and Consultant agrees to use its best efforts to meet this goal.

4. Task Order Approvals

A. Services to be performed pursuant to a Task Order may only commence once a specific Notice to Proceed for that Task Order has been issued by the District.

B. Task Orders are subject to approval by the District's Deputy Operating Officer unless delegated to the Unit Manager.

C. District Unit Manager(s) is authorized to approve individual Task Orders in an amount not-to-exceed $ [Authorization Amount]. [NOT USED]

D. The total not-to-exceed amount for any one Task Order shall not exceed $250,000.

AMENDMENT NO. 1 TO AGREEMENT A4264A

REVISED SCHEDULE OC
REVISED ATTACHMENT ONE
FEES AND PAYMENTS

Please Note: Failure to comply with the instructions below could result in a delay in receiving the Notice to Proceed. The District will not be responsible for time lost or costs incurred due to failure to comply with these requirements. Please note the checklist of documents needed at the end of this Revised Appendix Four Insurance Requirements.

Without limiting the Consultant's indemnification of, or liability to, the Santa Clara Valley Water District ("Valley Water"), the Consultant must provide and maintain at its own expense, during the term of this Agreement, or as may be further required herein, the following insurance coverages and provisions as listed below.

Consultant must provide its insurance broker(s)/agent(s) with a copy of these requirements and warrants that these requirements have been reviewed by Consultant's insurance agent(s) and/or broker(s), who have been instructed by Consultant to procure the insurance coverage required herein.

In addition to certificates, Consultant must furnish Valley Water with copies of all original endorsements affecting coverage required by this Revised Appendix. The certificates and endorsements are to be signed by a person authorized by that insurer to bind coverage on its behalf. **All endorsements and certificates are to be received and approved by Valley Water before the Agreement is executed**. In the event of a claim or dispute, Valley Water has the right to require Consultant's insurer to provide complete, certified copies of all required pertinent insurance policies, including endorsements affecting the coverage required by this Revised Appendix Four Insurance Requirements.

If your insurance broker has any questions about the above requirements, please advise him/her to call Mr. David Cahen, District Risk Manager at (408) 630-2213.

Certificates of Insurance

Consultant shall furnish the Valley Water with a Certificate of Insurance. The certificates will be issued on a standard ACORD Form.

Consultant shall instruct their insurance broker/agent to submit all insurance certificates and required notices electronically in PDF format to the designated Valley Water Contract Administrator and email a copy to **valleywater@ebix.com**.

The certificates will:

1. Identify the underwriters, the types of insurance, the insurance limits, the deductibles and the policy term;
2. Include copies of all the actual policy endorsements required herein; and
3. In the "Certificate Holder" box include:

   Santa Clara Valley Water District
   5750 Almaden Expressway
   San Jose, CA 95118
   Agreement A4264A / CAS No. 4940

IMPORTANT: The agreement or CAS number must be included.
In the Description of Operations/Locations/Vehicles/Special Items Box:

1. Certificate Holder shall be named as Additional Insured;
2. Valley Water agreement or project number shall appear;
3. The list of policies scheduled as underlying on the Umbrella policy shall be listed; and
4. Waiver of Subrogation must be indicated as endorsed to all policies.

If Consultant receives any notice that any of the insurance policies required by this Revised Appendix Four Insurance Requirements may be cancelled or coverage reduced for any reason whatsoever, Consultant or insurer shall immediately provide written notice to the designated Valley Water Contract Administrator that such insurance policy required by this Revised Appendix Four Insurance Requirements is canceled or coverage is reduced.

Maintenance of Insurance

If Consultant fails to maintain such insurance as is called for herein, Valley Water, at its option, may suspend payment for work performed and/or may order Consultant to suspend all Consultant's work at Consultant's expense until a new policy of insurance is in effect.

Renewal of Insurance

Consultant will provide the Valley Water with a current Certificate of Insurance and endorsements within thirty (30) business days from the expiration of insurance.

Consultant shall instruct its insurance broker/agent to:

1. Submit all renewals of insurance certificates and required notices electronically in PDF format to: **valleywater@ebix.com**

2. Provide the following information in the "Certificate Holder" box:

   Santa Clara Valley Water District
   5750 Almaden Expressway
   San Jose, CA 95118
   Agreement A4264A / CAS No. 4940

IMPORTANT: The agreement or CAS number must be included.

Consultant must, at its sole cost and expense, procure and maintain during the entire period of this Agreement the following insurance coverage(s).

(REMAINDER OF PAGE INTENTIONALLY LEFT BLANK)

REVISED SCHEDULE OC
REVISED ATTACHMENT ONE
FEES AND PAYMENTS

Required Coverages

1. Commercial General/Business Liability Insurance with coverage as indicated:

$2,000,000 per occurrence / **$2,000,000** aggregate limits for bodily injury and property damage

General Liability insurance must include:

a. Coverage at least as broad as found in standard ISO form CG 00 01.
b. Contractual Liability expressly including liability assumed under this contract.
c. If Consultant must be working within fifty (50) feet of a railroad or light rail operation, any exclusion as to performance of operations within the vicinity of any railroad bridge, trestle, track, roadbed, tunnel, overpass, underpass, or crossway must be deleted, or a railroad protective policy in the above amounts provided.
d. Severability of Interest.
e. Broad Form Property Damage liability.

2. Business Auto Liability Insurance with coverage as indicated:

$2,000,000 combined single limit for bodily injury and property damage per occurrence, covering all owned, non-owned and hired vehicles.

3. Professional/Errors and Omissions Liability with coverage as indicated:

$5,000,000 per claim/ **$5,000,000** aggregate

Professional/Errors and Omission Liability appropriate to the Consultant's profession, and must include:

a. If coverage contains a deductible, or self-insured retention, it shall not be greater than one hundred thousand dollars ($100,000) per occurrence/event.
b. Coverage shall include contractual liability
c. If coverage is claims-made:

    i. Certificate of Insurance shall clearly state that the coverage is claims-made.
    ii. Policy retroactive date must coincide with or precede the Consultant's start of work (including subsequent policies purchased as renewals or replacements).
    iii. Policy must allow for reporting of circumstances or incidents that might give rise to future claims.
    iv. Insurance must be maintained and evidence of insurance must be provided for at least three (3) years after completion of the contract of work.

4. Workers' Compensation and Employer's Liability Insurance

Statutory California Workers' Compensation coverage covering all work to be performed for the Valley Water.

Employer Liability coverage for not less than $1,000,000 per occurrence.

General Requirements

With respect to all coverages noted above, the following additional requirements apply:

1. **Additional Insured Endorsement(s):** Consultant must provide an additional insured endorsement for Commercial General/Business Liability (for both on-going and completed operations) and Business Automobile liability coverage naming the **Santa Clara Valley Water District, its Directors, officers, employees, and agents, individually and collectively,** as additional insureds, and must provide coverage for acts, omissions, etc. arising out of the named insureds' activities and work. Other public entities may also be added to the additional insured endorsement as applicable and the Consultant will be notified of such requirement(s) by the Valley Water. **NOTE:** This section does not apply to the Workers' Compensation and Professional Liability policies.

   (**NOTE:** Additional insured language on the Certificate of Insurance is **NOT** acceptable without a separate endorsement such as Form CG 20 10, CG 2033, CG 2037, or CG 2038. Editions dated 07/04 are not acceptable.)

2. **Primacy Clause:** Consultant will provide evidence (either through the Certificate of Insurance, endorsement or language in the insurance contract) that consultant's insurance is primary with respect to any other insurance which may be carried by the Valley Water, its Directors, its officers, agents and employees, and the Valley Water's coverage must not be called upon to contribute or share in the loss. **NOTE:** This section does not apply to the Workers' Compensation policies.

3. **Cancellation Clause**: Consultant will provide endorsements for all policies stating that the policy will not be cancelled without 30 days prior notification to the Valley Water**.**

4. **Acceptability of Insurers:** All coverages must be issued by companies admitted to conduct business in the State of California, which hold a current policy holder's alphabetic and financial size category rating of not less than A- V, according to the current Best's Key Rating Guide or a company of equal financial stability that is approved by the Valley Water's Risk Manager. Non-Admitted companies may be substituted on a very limited basis at the Risk Manager's sole discretion.

5. **Self-Insured Retentions or Deductibles:** Any deductibles or self-insured retentions must be declared to and approved by the Valley Water. At the option of the Valley Water, either: the insurer shall reduce or eliminate such deductibles or self-insured retentions as respects the Valley Water, its officers, officials, employees and volunteers; or the Consultant shall
   provide a financial guarantee satisfactory to the Entity guaranteeing payment of losses and related investigations, claim administration, and defense expenses. Consultant agrees that in the event of a claim they will pay down any agreed upon SIR in a prompt manner as soon as bills are incurred in order to trigger the insurance related to the SIR.

6. **Subconsultants:** The Consultant shall secure and maintain or shall be responsible for

ensuring that all subconsultants performing the Contract Services secure and maintain all insurance coverages appropriate to their tier and scope of work in a form and from insurance companies reasonably acceptable to the Valley Water.

7. **Amount of Liability not Limited to Amount of Insurance:** The insurance procured by Consultant for the benefit of the Valley Water must not be deemed to release or limit any liability of Consultant. Damages recoverable by the Valley Water for any liability of Consultant must, in any event, not be limited by the amount of the required insurance coverage.

8. **Coverage to be Occurrence Based:** Except for Professional Liability, all coverage must be occurrence-based coverage. Claims-made coverage is not allowed.

9. **Waiver of Subrogation:** Consultant agrees to waive subrogation against the Valley Water to the extent any loss suffered by Consultant is covered by any Commercial General Liability policy, Automobile policy, Workers' Compensation policy described in **Required Coverages** above. Consultant agrees to advise its broker/agent/insurer and agrees to provide evidence (either through the Certificate of Insurance, endorsement or language in the insurance contract) that subrogation has been waived by its insurer.

10. Required Coverages: The required Per-Occurrence and Aggregate limits can be met using a combination of primary and excess (umbrella) coverages.

11. **Non-compliance:** The Valley Water reserves the right to withhold payments to the Consultant in the event of material noncompliance with the insurance requirements outlined above.

(REMAINDER OF PAGE INTENTIONALLY LEFT BLANK)

CHECK LIST OF DOCUMENTS NEEDED

General Liability:	A.	Limits **($2,000,000)**	
	B.	Additional Insured (Endorsement)	
	C.	Waiver of Subrogation (COI, Endorsement or policy language)	
	D.	Primacy (COI, Endorsement or policy language)	
	E.	Cancellation Endorsement	

Auto Liability:	A.	Limits **($2,000,000)**	
	B.	Additional Insured (Endorsement)	
	C.	Waiver of Subrogation (COI, Endorsement or policy language)	
	D.	Primacy (COI, Endorsement or policy language)	
	E.	Cancellation Endorsement	

Umbrella:	A.	Limits ($)	
	B.	Primacy (Endorsement or policy language)	

Workers Comp:	A.	Limits **($1,000,000)**	
	B.	Waiver of Subrogation (Endorsement or policy language)	
	C.	Cancellation Endorsement	

Professional Liability:	A.	Limits **($5,000,000)**	
	B.	Cancellation Endorsement	

Appendix IV ConsultantGL2AL2PL2_rev. 7.20.20/CAS rev. 12.22.20

(REMAINDER OF PAGE INTENTIONALLY LEFT BLANK)

AMENDMENT NO. 1 TO AGREEMENT A4264A

REVISED SCHEDULE OC
REVISED ATTACHMENT ONE
FEES AND PAYMENTS

1. Total Authorized Funding.

Total payment for Services performed, to the satisfaction of Valley Water, as described in the Schedule and in all approved Task Orders will not exceed a total amount of **$1,750,000 (Not-to-Exceed Fees or NTE)**. Under no conditions will the total compensation to the Consultant exceed this NTE payment amount without prior written approval in the form of an amendment to this Agreement executed by the Valley Water's Board of Directors (Board), or Chief Executive Officer, or designee, as authorized by the Board. It is understood and agreed that this total is an estimate, and the total amount of Services to be requested by the Valley Water may be less. **There is no guarantee, either expressed or implied, as to the actual dollar amount that will be authorized pursuant to this Agreement.**

2. Terms and Conditions.

Payments for Services performed, as described in each Task Order, which applies to the specific Services, will be based on the following terms:

A. The Valley Water will pay for Services provided by the Consultant according to the rates for professional, technical, and administrative personnel as well as materials and supplies as listed below in the Hourly Rate and Unit Rate Schedule(s).

B. The stated hourly rates are effective for the term of this Agreement unless otherwise revised as indicated. After 12 months from the date this Agreement is entered into by parties ("anniversary date"), and each 12 months thereafter, these hourly rates may be negotiated by the Consultant and the Valley Water, provided Consultant submits written notice to Valley Water of Consultant's request to revise the hourly rates 90 calendar days prior to the anniversary date of this Agreement. Both parties will use as a benchmark for negotiations the percent change for the previous 12 months of the "Employment Cost Index (ECI), for total compensation for private industry workers, for the San Francisco-Oakland-San Jose, CA CSA Census region and metropolitan area (not seasonally adjusted)" as published by the U.S. Department of Labor, Bureau of Labor Statistics, or **2.5%** whichever is less. A negative index will result in rates remaining the same. Such rate revisions are subject to written approval by the Valley Water's Deputy Operating Officer.

C. Reimbursable Expenses.

1. All reimbursable expenses not already covered in overhead may include, but are not limited to, mapping, rendering, printouts, leased equipment, mailing and delivery services, printing services, film and processing, plotting, and supplies. These other direct expenses as approved by the Valley Water Project Manager will be billed on a monthly basis at actual cost plus 5% linked to each Agreement Task, provided that the Task total NTE amount is not exceeded. Consultant shall provide receipts for each other direct expense item(s) with monthly invoices submitted. The 5% markup will be applied only

once, either by the Consultant or by its subconsultants, subcontractors, or vendors.

2. Equipment purchased on behalf of the Valley Water that costs $50 or more must receive the prior written approval of the Valley Water Project Manager. All equipment purchased on behalf of the Valley Water and paid for by the Valley Water shall become the property of the Valley Water and be delivered to Valley Water prior to expiration of this Agreement.
3. Travel expenses are reimbursed at actual costs. Travel and overnight accommodations, including per diem, required for performance of this Agreement will be paid at reasonable cost not to exceed the U.S. General Services Agency Per Diem Rates for Sunnyvale/Palo Alto/San Jose, California area, provided prior approval has been obtained from Valley Water Project Manager. For air travel, Valley Water will pay the cost of a coach class or equivalent ticket. Where air travel is required, Valley Water will pay the total cost of taxi, rideshare, public transportation, or a rental car, which may include insurance, gas, car fee, and taxes and will be paid at the actual costs incurred. Vehicle rental is limited to a compact or economy model, unless prior approval has been obtained from Valley Water Project Manager for a different type of vehicle.

4. Expenses incurred by the Consultant for Subconsultants, subcontractors and vendors, including lab services, will be reimbursed at actual cost plus 5%. Consultant shall provide invoices for all such services regardless of cost. The 5% markup will be applied only once, either by the Consultant or by its subconsultants, subcontractors, or vendors.

D. For staff with rates exceeding the rate of $[RATE LIMIT]/hr, the Consultant must obtain written approval from the Valley Water Project Manager as to the numbers of hours per task prior to that individual working on the Project. [NOT USED]

E. **Prevailing Wage Requirements**

1. The Scope of Services described in Tasks 1- 6 is considered by the Valley Water to be “Public Works” requiring the payment of prevailing wages. See the Revised Standard Consultant Agreement Section Four, Fees and Payments, subsection 3., Prevailing Wages.

2. In accordance with prevailing wage laws, the Director of the California Department of Industrial Relations (Director) has ascertained the general prevailing rate of wages and employer payments for health and welfare, pension, vacation, and similar purposes available to the particular craft, classification, or type of workers employed on the Project. These rates are set forth in the latest determination obtained from the Director, which is on file in the Valley Water’s Office of the Clerk of the Board of Directors and incorporated herein by reference the same as though set forth in full. The rates are also available on the State of California Department of Industrial Relations website at http://www.dir.ca.gov.

AMENDMENT NO. 1 TO AGREEMENT A4264A

REVISED SCHEDULE OC
REVISED ATTACHMENT ONE
FEES AND PAYMENTS

HOURLY/UNIT RATE SCHEDULE

CLASSIFICATION	Original Hourly/Unit Rates Effective May 28, 2019	Annual Hourly/Unit Rates Effective May 28, 2020
Consultant: Cal Engineering & Geology, Inc.		
Senior Principal Geotechnical Engineer or Geologist	$260	$267
Principal Geotechnical Engineer or Geologist	$196	$201
Consulting Geotechnical Engineer or Geologist	$207	$212
Associate Geotechnical Engineer or Geologist	$157	$161
Senior Geotechnical Engineer or Geologist	$154	$158
Project Engineer or Geologist	$102	$105
Staff Engineer or Geologist	$95	$97
Project Assistant / Administrative	$75	$77
Senior GIS/CADD Specialist	-	$91
GIS/CADD Specialist	-	$90
UAS Manager	-	$120
Field Technician - straight time (prevailing wage)	$149	$153
Field Technician - overtime (after 8 hrs., 1st 8 hrs Sat)	$189	$194
Field Technician - 2x (after 8 hrs. Sat; Sun, holidays)	$231	$237
Subconsultant: GEI Consultants, Inc.		
Senior Consultant - Grade 8	$288	$295
Senior Professional - Grade 7	$237	$243
Senior Professional - Grade 6	$195	$200
Senior Professional - Grade 5	$153	$157
Project Professional - Grade 4	$139	$142
Project Professional - Grade 3	$123	$126
Staff Professional - Grade 2	$106	$109
Senior CADD Drafter and Designer	$128	$131
Word Processor, Administrative Staff	$99	$101
Subconsultant: InfraTerra, Inc.		
Senior Principal Geologist	$231	$237
Principal Geologist	$216	$221
Senior Geologist	$183	$188
Project Geologist	$122	$125

AMENDMENT NO. 1 TO AGREEMENT A4264A

REVISED SCHEDULE OC
REVISED ATTACHMENT ONE
FEES AND PAYMENTS

CLASSIFICATION	Original Hourly/Unit Rates Effective May 28, 2019	Annual Hourly/Unit Rates Effective May 28, 2020
Subconsultant: Exploration GeoServices, Inc. (Soil Borings)		
Drill Rig / 2-man Crew, hollow stem	$314	$322
Drill Rig / 2-man Crew, mud rotary	$333	$341
Overtime Surcharge	$61	$63
Subconsultant: Pitcher Services, LLC (Soil Borings)		
Mud Rotary Drill Rig / 2-man Crew	$422	$433
CME 850 Track mounted HAS/Rotary / 2-man Crew	$467	$479
California Push Technologies, Inc. (Cone Penetration Test Soundings)		
Truck or Track-Mounted CPT Rig (straight time, PW)	$380	$390
Subconsultant: Britton Exploration, Inc. (Limited Access Soil Borings)		
Track-Mounted Drilling Rig	$335	$343
Subconsultant: Ruggeri Jensen Azar (Surveyors)*		
Field Survey Manager		$197
1-Person Survey Crew		$180
2-Person Survey Crew		$283
3-Person Survey Crew		$340
Consultant: Cal Engineering & Geology, Inc.		
Moisture Content (ASTM D 2216)	$22	$23
Moisture & Density (ASTM D 4318)	$30	$31
Atterberg Limits (ASTM D 4318)	$196	$201
Compaction Curve, 4" mold (ASTM D 1557)	$249	$255
Compaction Curve, 6" mold (ASTM D 1557)	$308	$316
Wash over #200 Sieve (ASTM D 1140)	$69	$71
Sieve Analysis with #200 Wash (ASTM D 422)	$143	$147
Sieve & Hydrometer (ASTM D 422)	$223	$229

AMENDMENT NO. 1 TO AGREEMENT A4264A

REVISED SCHEDULE OC
REVISED ATTACHMENT ONE
FEES AND PAYMENTS

SUBCONTRACTOR LAB TESTING

Subconsultant: Cooper Testing Labs	**Original Hourly/Unit Rates Effective May 28, 2019**	**Annual Hourly/Unit Rates Effective May 28, 2020**
Moisture (MC)	$21	$22
MD, 2-2.5" diameter	$25	$26
MD 3" diameter	$36	$37
PI Dry (CTL default)	$171	$175
PI Wet Prep	$245	$251
Sieve (SA)-3/4" / +3/4"	$115/$186	$118/$191
Sieve + Hydrometer	$192	$197
-#200Wash	$83	$85
Specific Gravity(-#4)	$93/$116	$95/$119
Specific Gravity(+#4)	$165	$169
% Organics	$93	$95
Total Porosity	$115	$118
Effective Porosity	$247	$253
UC-Soil	$77	$79
Direct Shear - CU	$98/point	$100/point
Direct Shear - CD	$219/point	$224/point
TX-UU	$142	$146
TX-ICU	$242/point	$248/point
TX-ICU- Staged	$484/2-3 pts.	$496/2-3 pts.
TX-ICU-PP	$494/point	$506/point
TX-ICU-PP- Staged	$988/2-3 pts.	$1,013/2-3pts.
Torsional peak / res	$343/$322 per pt	$352/$330 per pt
Torsional peak and res	$665/pt	$682/pt
Incremental - Consol	$395	$405
SS/+Expansion-Pressure	$300	$308
Shrink Swell (SS)	$165	$169
Expansion Pressure	$165	$169
Expansion Index, ASTM	$412	$422
Permeability 2-3" dia.	$334	$342
Modified Proctor 4"/ 6"	$274/$327	$281/$335
Max Index Density .1 / .5ft3	$252/$380	$258/$390
Min. Index Density .1 / .5ft3	$125/$252	$128/$258
R-Value	$262	$269
R-value-batch/admix	$296/$321	$303/$329
CBR	$867	$889
Sand Equivalent (SE)	$115	$118
Class II AB Spec	$788	$808
Durability Index, Fine / Coarse	$136/$164	$139/$168
LA Abrasion (ASTM C131)	$252	$258
Sulfate Soundness	$164/frac.	$168/frac.

AMENDMENT NO. 1 TO AGREEMENT A4264A

REVISED SCHEDULE OC
REVISED ATTACHMENT ONE
FEES AND PAYMENTS

Subconsultant: Cooper Testing Labs	**Original Hourly/Unit Rates Effective May 28, 2019**	**Annual Hourly/Unit Rates Effective May 28, 2020**
Remolding, per point	$65	$67
Junior Technician/hr	$115	$118
Senior Technician/hr	$142	$146
Principal/hr	$175	$179
Sample Pick-up	$87	$89
Subconsultant: Signet Testing Labs		
Moisture (MC)	$65	$67
MD, 2-2.5” diameter	$135	$138
PI (ASTM 4318), Dry prep / Wet prep	$295 / $320	$302/$328
Sieve (SA)-1/4” to -200	$195	$200
-#200Wash	$195	$200
Specific Gravity	$225	$231
% Organics	$225	$231
UC-Soil	$125	$128
Direct Shear, UU	$225/point	$231/point
Direct Shear, CU	$265/point	$272/point
Direct Shear, CD, Sandy soil	$295/point	$302/point
Direct Shear, CD, Clayey soil	$325/point	$333/point
TX-UU	$195	$200
TX-ICU-PP	$495/point	$507/point
Incremental - Consolidation	$385	$395
Shrink Swell (SS)	$225	$231
Expansion pressure	$185	$190
Permeability, Sandy soil	$395	$405
Permeability, Clayey soil	$465	$477
Modified Proctor 4”/ 6”	$375/$425	$384/$436
R-Value	$395	$405
R-value-batch/admix, lab mixed	$475	$487
CBR	$825	$846
Sand Equivalent (SE)	$265	$272
Durability Index, Fine / Coarse	$265/$265	$272/$272
LA Abrasion (ASTM C131) 500 rev	$295	$302
Soundness	$195/frac.	$199/frac
Mohs Hardness	$295	$302
Subconsultant: ISI Geotechnical Lab		
Moisture (MC)	$36	$37
MD, 2-2.5" diameter	$46	$47
PI (ASTM 4318)	$200	$200
Sieve (SA)-1/2” to -200	$129	$132
Sieve + Hydrometer	$227	$233
-#200Wash	$83	$85

AMENDMENT NO. 1 TO AGREEMENT A4264A

REVISED SCHEDULE OC
REVISED ATTACHMENT ONE
FEES AND PAYMENTS

Subconsultant: Cooper Testing Labs	**Original Hourly/Unit Rates Effective May 28, 2019**	**Annual Hourly/Unit Rates Effective May 28, 2020**
Specific Gravity	$180	$185
% Organics	$103	$105
UC-Soil	$113	$115
Direct Shear	$175/point	$179/point
TX-UU	$144	$148
TX-ICU-PP	$530/point	$543/point
Incremental - Consolidation	$402	$412
Swell or Collapse	$340	$349
Permeability	$376	$385
Modified Proctor 4"/ 6"	$268/$324	$270/$325
R-Value	$479	$491
R-value-batch/admix	$592	$607
CBR	$767	$786

* Additional subconsultants were added through a Valley Water internal administrative process after original Agreement was executed.

(REMAINDER OF PAGE INTENTIONALLY LEFT BLANK)

AMENDMENT NO. 1 TO AGREEMENT A4264A
REVISED SCHEDULE OC
REVISED ATTACHMENT THREE
CONSULTANTS KEY STAFF AND SUBCONSULTANTS

1. Consultant's key staff assigned to the Project are as follows:

Team Member	Classification	Project Role	Contact Information
Dan Peluso	Senior Principal Geotechnical Engineer	Principal Engineer	6455 Almaden Expwy., #100 San José, CA 95120 (925) 433-5018 dpeluso@caleng.com
Phil Gregory	Senior Principal Geotechnical Engineer	Senior Principal Engineer	785 Ygnacio Valley Road Walnut Creek, CA 94596 (925) 433-5016 pgregory@caleng.com
G. Reid Fisher	Senior Principal Geologist	Principal Geologist	6455 Almaden Expwy., #100 San José, CA 95120 (925) 433-5017 rfisher@caleng.com
Paul Sorci	Associate Geotechnical Engineer	Associate Engineer	6455 Almaden Expwy., #100 San José, CA 95120 (925) 433-5001 psorci@caleng.com
Mark Myers	Principal Geotechnical Engineer	Principal Engineer	785 Ygnacio Valley Road Walnut Creek, CA 94596 (925) 433-5014 mmyers@caleng.com
Kevin Loeb	Project Geologist	Project Geologist	6455 Almaden Expwy., #100 San José, CA 95120 (925) 433-2302 kloeb@caleng.com
Dave Burger	Associate Geologist	Associate Geologist	785 Ygnacio Valley Road Walnut Creek, CA 94596 (925) 433-5012 dburger@caleng.com
Eli Zane	Associate Geotechnical Engineer	Associate Engineer	785 Ygnacio Valley Road Walnut Creek, CA 94596 (925) 433-5013 ezane@caleng.com

AMENDMENT NO. 1 TO AGREEMENT A4264A
REVISED SCHEDULE OC
REVISED ATTACHMENT THREE
CONSULTANTS KEY STAFF AND SUBCONSULTANTS

Team Member	Classification	Project Role	Contact Information
Mehal Vitthal	Senior Engineer	Senior Engineer	6455 Almaden Expwy., #100 San José, CA 95120 (925) 433-2303 mvitthal@caleng.com
Rocio Briseno	Project Geologist	Project Geologist	785 Ygnacio Valley Road Walnut Creek, CA 94596 (925) 433-5011 rbriseno@caleng.com
Jim Nelson	Consulting Geologist	Engineering Geologist Consultant	785 Ygnacio Valley Road Walnut Creek, CA 94596 (831) 801-9866 pacrimgeo@gmail.com

2. The following Subconsultants are authorized to perform services pursuant to this Agreement:

Firm	Project Role	Contact Information
GEI Consultants, Inc.	Geotechnical Engineering and Engineering Geology Subconsultant	Leonard Sansone 180 Grand Avenue, Suite 1410 Oakland, CA 94612 (510) 350-2903 lsansone@geiconsultants.com
InfraTerra, Inc.	Geoscience and Engineering Subconsultant	Christopher Hitchcock 5 Third St., Suite 420 San Francisco, CA 94103 (925) 818-3690 chitchcock@infraterra.com
Exploration GeoServices, Inc.	Drilling Company	John Collins 1535 Industrial Avenue San José, CA 95112 (408) 280-6822 john@explorationgeo.com
California Push Technologies, Inc.	Cone Penetration Test (CPT) Provider	John Rogie 820 Aladdin Avenue San Leandro, CA 94577 (510) 357-3677 john@cptinc.com

AMENDMENT NO. 1 TO AGREEMENT A4264A
REVISED SCHEDULE OC
REVISED ATTACHMENT THREE
CONSULTANTS KEY STAFF AND SUBCONSULTANTS

Firm	Project Role	Contact Information
Britton Exploration, Inc.	Drilling Company	Paul Britton 23051 Evergreen Ln Los Gatos, CA 95033-9219 (408) 355-5781 paul@brittonexploration.com
Pitcher Services, LLC	Drilling Company	Terry Shewchuk 218 Demeter Street East Palo Alto, CA 94303 (650) 328-8910 tshewchuk@pitcherdrilling.com
Ruggeri Jensen Azar	Surveyors	Jeffrey Vest, LST 4909 Field Survey Manager 8055 Camino Arroyo Gilroy, CA 95020 G: (408) 848-0300 ext. 342 O: (408) 848-0313 C: (408) 422-3900 JVest@RJA-GPS.COM
ISI Inspection Services DBA Inspection Services, Inc.	Soil Testing Lab	John Hunt 1798 University Avenue Berkeley, CA 94703 (510) 900-2100 jhunt@inspectionservices.net
Signet Testing Labs, Inc.	Soil Testing Lab	Carla Collins 3526 Breakwater Ct. Hayward, CA 94545 (510) 887-8484 ccollins@signettesting.com
Cooper Testing Labs, Inc.	Soil Testing Lab	Mike Davis 937 Commercial Street Palo Alto, CA 94303-4908 (650) 213-8436 mike@coopertestinglabs.com

THIS PAGE INTENTIONALLY LEFT BLANK

Santa Clara Valley Water District

File No.: 21-0121

Agenda Date: 1/26/2021
Item No.: *6.2.

BOARD AGENDA MEMORANDUM

SUBJECT:
Authorize the Chief Executive Officer to Execute the Master Agreement With the City of Milpitas for the Removal and Construction of City Improvements, Modifications to City Facilities, and Work Within City's Right of Way Included in the Lower Berryessa Creek Flood Protection, Lower Calera Creek Flood Protection, and Lower Penitencia Creek Improvements Projects (Project Nos. 40174005 and 40334005) for a Fee of $1,665,505 (Milpitas) (District 3).

RECOMMENDATION:
Authorize the Chief Executive Officer to Execute the Master Agreement With the City of Milpitas for the Removal and Construction of City Improvements, Modifications to City Facilities, and Work Within City's Right of Way Included in the Lower Berryessa Creek Flood Protection, Lower Calera Creek Flood Protection, and Lower Penitencia Creek Improvements Projects for a Fee of $1,665,505 (Milpitas) (District 3).

SUMMARY:
Valley Water has completed civil construction of the Lower Berryessa Creek Flood Protection Project (from the confluence of Lower Penitencia Creek to Calaveras Boulevard) (LBC Project) and is proceeding with the design and construction of the Lower Calera Creek Flood Protection Project (an element of the Lower Berryessa Creek Flood Protection Project, Phase 2, from the Union Pacific Railroad up to about 880 feet upstream of Arizona Avenue) (LCC Project) and the Lower Penitencia Creek Improvements Project (Coyote Creek confluence to just downstream of San Andreas Drive) (LPC Project). The LCC and LPC Projects are scheduled to begin construction in June 2021. All three projects are in City of Milpitas, and the City requested Valley Water construct additional improvements to City's facilities and rights of way within the limits of the LBC, LCC, and LPC Projects at City's cost. The improvements requested by the City include, but are not limited, to: upsizing of storm drain outfalls; asphalt pavement replacement along the City's public trail beyond limits required for Valley Water to complete its work, and installation of duckbill check valves at City's storm drain outfalls.

The estimated cost to construct City's requested improvements is summarized below:

1. LBC Project: $1,046,575

2. LCC Project: $283,130

3. LPC Project: $335,800

The subject Master Agreement describes the obligations for the removal, replacement, reconstruction or alteration of existing City Improvements within the LBC, LCC and LPC Projects and reimbursement of any funds from the City to Valley Water for costs incurred by Valley Water for undertaking construction of improvements as requested by the City.

The Master Agreement also includes two additional items that are related to implementation of capital improvement projects of Valley Water and City: (1) consideration of transferring rights of way for implementation of capital improvements projects by Valley Water and City; and (2) payment for cost to replace damaged City landscape from construction of the Upper Berryessa Creek Flood Protection Project (UBC Project).

(1) Consideration of Transferring Rights of Way:

Valley Water requires acquisition of City right of way in fee for construction of the LPC Project and City requires acquisition of an easement from Valley Water for City's installation of a vehicular crossing over the East Penitencia Channel. City and Valley Water staff will present the proposed transfers of right of way to their respective elected body, City Council or Valley Water Board, for consideration and approval within 6 months of execution of the agreement. The agreement allows for the City to issue an encroachment permit for construction prior to the completion of the transfer of land rights.

(2) Payment for Cost to Replace Damaged City Landscape from Construction of the UBC Project

The UBC Project is a joint project between the U.S. Army Corps of Engineers (USACE) and Valley Water. As the Local Project Sponsor, in May 2016, Valley Water entered into a Project Partnership Agreement with the USACE for the construction of the UBC Project. Valley Water also entered into an agreement with the City in September 2016 for construction of USACE/Valley Water UBC Project. In April 2017, while constructing the project, the USACE construction contractor accidentally cut off an irrigation water line. The contractor requested City to shutoff water in order to repair the water line. However, upon completion of the repair, it was not conclusive if the contractor requested City to perform inspection and turn the water back on. As a result, City landscaping was damaged because of lack of water. City submitted a claim to USACE for the cost to replace the damaged landscaping. The USACE denied the claim twice citing that they did not find any negligence on their contractor. City then submitted the claim to Valley Water and Valley Water tendered the claim directly to the construction contractor's insurance company since the insurance policy named Valley Water and City as additional insured parties. The insurance company had initially denied the claim and Valley Water

resubmitted the claim. After further negotiation with Valley Water and the City, the insurance company agreed to pay the City $45,000 of the City's claim of $86,125 to replace the damaged landscaping. Valley Water is paying City the remaining $41,125 of their claim by reducing the amount that City owes Valley Water from the LBC Project. Paying the balance of the claim is consistent with the District's obligation in Section 10.B. that states, "During construction and until acceptance of the City Project Improvements as evidenced by City's issuance of the Notice of Acceptance, the District assumes and shall bear all risk of and from (a) loss, injury, damage or destruction to the City Project Improvements…."

FINANCIAL IMPACT:
There are sufficient funds available in the FY 2021 budget for the Lower Berryessa Creek Flood Protection Project (Project No. 40174005) and the Lower Penitencia Creek Improvements Project (Project No. 40334005).

CEQA:
The District is the lead agency under the California Environmental Quality Act for the implementation of these Projects.

On December 13, 2011, the Board adopted and certified the FEIR for the Lower Berryessa Creek and Lower Calera Creek improvements. On November 28, 2017, the Board adopted and certified the FEIR for the Lower Penitencia Creek improvements. Impacts and mitigation due to improvements proposed are addressed in the approved FEIR. On December 2, 2020, Valley Water completed a Categorical Exemption document for the proposed trail pavement improvements along Lower Berryessa Creek that are a part of the work in the Agreement.

The recommended action does not alter any of our CEQA documents or permits.

ATTACHMENTS:
Attachment 1: Agreement
*Supplemental Agenda Memorandum
*Supplemental Attachment 1: Agreement

UNCLASSIFIED MANAGER:
Rechelle Blank, 408-630-2615

THIS PAGE INTENTIONALLY LEFT BLANK

City Agreement No.: Valley Water Agreement No.:

Encroachment Permit No(s):

SANTA CLARA VALLEY WATER DISTRICT

MASTER AGREEMENT FOR THE REMOVAL & CONSTRUCTION OF CITY IMPROVEMENTS, MODIFICATION TO CITY FACILITIES AND WORK WITHIN CITY'S RIGHT OF WAY INCLUDED IN THE VALLEY WATER LOWER BERRYESSA CREEK FLOOD PROTECTION PROJECT, LOWER CALERA CREEK FLOOD PROTECTION PROJECT AND LOWER PENITENCIA CREEK IMPROVEMENTS PROJECT

This Agreement for the Removal & Construction of City Improvements, Modification to City Facilities and Work within the City's Right of Way ("Agreement") is entered into by the City of Milpitas, a municipal corporation ("City"), and Santa Clara Valley Water District, a special district created by the California Legislature ("Valley Water"), on 2021, ("Agreement Effective Date"), and the parties agree to the terms and conditions as set forth herein.

RECITALS

A. WHEREAS, Valley Water as owner of certain waterways within the City desires to construct significant flood protection improvements along Lower Berryessa Creek ("LBC"), Lower Calera Creek ("LCC") and Lower Penitencia Creek ("LPC") within the City of Milpitas. Such work shall include approximately 8,700 feet of channel from LBC's confluence with LPC upstream to Calaveras Boulevard, and approximately 2,830 feet of channel from the Union Pacific Railroad up to about 880 feet upstream of Arizona Avenue on LCC. Work will also extend approximately 1-mile from Coyote Creek confluence to just downstream of San Andreas Drive on LPC. Such works are collectively referred to herein as the "Lower Berryessa Creek Flood Protection Project" ("LBC Project"), the "Lower Calera Creek Flood Protection Project" ("LCC Project") and the "Lower Penitencia Creek Improvements Project ("LPC Project"). The LBC Project, LCC Project and LPC Project are separate projects and each will have their own contractor and project schedules. Valley Water will manage the projects during the design and construction phases including hiring contractors and construction administration;

B. WHEREAS, the LBC Project and LCC Project will provide 100-year flood protection for homes, schools, and businesses in Milpitas and LPC Project will maintain the existing Federal Emergency Management Agency (FEMA) accreditation along the east levee located between California Circle and Berryessa Creek;

C. WHEREAS the City currently owns and maintains the California Circle storm pump station, Abbott Avenue storm pump station, and Jurgens storm pump station;

D. WHEREAS the City owns and maintains their public storm drain outfalls located on Valley Water-owned lands and subject to Valley Water encroachment permits along all three creeks;

E. WHEREAS, City is the owner of the public street right-of-way and vehicular bridges, and is the owner of certain pedestrian bridges and pedestrian trails on Valley Water-owned lands within the LBC, LCC, and LPC Project limits;

F. WHEREAS, the City currently owns and maintains certain recreational improvements on Valley Water-owned lands along Berryessa Creek;

G. WHEREAS, Valley Water and City agreed to the maintenance, repair, replacement, and use obligations of City-owned recreational improvements along LBC located on Valley Water property within the City of Milpitas ("Valley Water Property") as described in a Joint Use Agreement entered into by the parties on September 4, 2002, attached hereto as Exhibit A ("LBC Trail Agreement");

H. WHEREAS, more specifically, City has a contractual obligation under Section 4(a) of the LBC Trail Agreement to compensate Valley Water for costs to remove or replace its City-owned recreational improvements located on Valley Water Property in the event Valley Water requires such removal or replacement in order to improve, maintain, or repair Berryessa Creek in any manner for Valley Water purposes;

I. WHEREAS, to facilitate the LBC Project, Valley Water has undertaken the planning, design, construction, and construction management necessary to remove and replace the City-owned recreational improvements affected by the LBC Project;

J. WHEREAS, as described in Section 4(b) of the LBC Trail Agreement, the removal and replacement of the City owned pedestrian bridge and trail is required to complete the LBC Project;

K. WHEREAS, an existing City trail, landscaping, and other recreational improvements were permitted and constructed in January 7th, 1997 on Valley Water-owned land along Lower Penitencia Creek (Lease Agreement Joint Use, SCVWD Agreement No. A2001 ("LPC Trail Agreement"), attached hereto as Exhibit B;

L. WHEREAS, City agreed to the maintenance, repair, replacement, and use obligations of the aforementioned City-owned recreational improvements located on Valley Water property ("Valley Water Property") as described in the LPC Trail Agreement;

M. WHEREAS, City has a contractual obligation under Section 6(b) of the LPC Trail Agreement to compensate Valley Water for costs to remove or replace its City-owned recreational improvements located on Valley Water Property in the event Valley Water requires such removal or replacement in order to improve, maintain, or repair Lower Penitencia Creek in any manner for Valley Water purposes;

N. WHEREAS, the City has an interest in, maintaining a portion of the City's recreational trail between California Circle and Cascadita Terrace on the east levee and from Milmont Drive to downstream of San Andreas Drive on the west levee, where it does not unreasonably interfere with the primary use of the property to carry out Valley Water's mission of flood protection, water resource management, and stream stewardship;

O. WHEREAS, the City has desire in, constructing duckbill check valves at all of their public storm drain and pump station outfalls located within the LCC and LPC Project limits, where it does not unreasonably interfere with the primary use of the property to carry out

Valley Water's mission of flood protection, water resource management, and stream stewardship;

P. WHEREAS the City currently owns and maintains vehicular bridges crossing Valley Water easements along North Milpitas Boulevard, Arizona Avenue, California Circle, and Milmont Drive;

Q. WHEREAS, the City has an interest in removing blight and in enhancing the appearance of Valley Water infrastructure along City right of way;

R. WHEREAS, the City has requested that Valley Water undertake certain "betterments", which are project elements that Valley Water determines exceeds the application of standards that would otherwise apply to the construction of that element. The project elements that Valley Water has determined are a betterment, include, but are not limited to: upsize of storm drain outfalls; replacement of concrete curb, gutter and sidewalk beyond the limits required for Valley Water to complete its work in accordance with City standards; asphalt pavement replacement along the City's public trail beyond limits required for Valley Water to complete its work, and installation of duckbill check valves at City's storm drain outfalls; and

S. WHEREAS, Valley Water and City wish to enter into this Agreement to outline respective party obligations for the removal, replacement, reconstruction or alteration of existing City Improvements within the LBC, LCC and LPC Projects (collectively, the "City Improvement Work" and reimbursement of any funds from the City to Valley Water for any and all costs incurred by Valley Water for undertaking such construction on behalf of the City.

T. NOW, THEREFORE the parties hereto agree as follows:

1. Incorporation of Recitals

The recitals set forth above are incorporated herein by this reference.

2. California Environmental Quality Act (CEQA)

a. Valley Water is the project owner for the LBC, LCC and LPC Projects and Lead Agency as described by the California Environmental Quality Act (CEQA). An Environmental Impact Report (EIR) was prepared and adopted by the District for the LBC Project on December 13, 2011. An EIR for the LCC Project was certified by the Valley Water Board of Directors in December 2011, and an addendum to the EIR was approved by the Valley Water CEO on November 19, 2018. The LPC Project EIR was certified by the Valley Water Board of Directors on November 28, 2017.

b. City has acted as the Lead Agency and project proponent for the City Improvement Work as described by CEQA.

(REMAINDER OF PAGE INTENTIONALLY LEFT BLANK)

3. Scope of Work

a. For the LBC Project, Valley Water will perform three different elements (described under paragraphs 3.a.(1– 3) during construction of the LBC Project as part of this Agreement.

(1) City Improvement Work: (i) storm drain outfall modifications; (ii) Berryessa Pump Station discharge pipe modification; (iii) asphalt concrete pedestrian trail improvement of Valley Water maintenance road; (iv) raised City owned pedestrian bridge; (v) retaining walls at pedestrian ramps; (vi) asphalt concrete pedestrian ramps; and (vii) concrete pedestrian ramp structure. Work shall be completed at City cost.

(2) City Storm Drain Outfall Replacement & Flap Gate Installation: Valley Water has designed and installed replacements of City storm drain outfalls and flap gates along the LBC Project. For the purposes of this Agreement, the replacement of outfalls shall be defined as the functional replacement with flap gates necessary to conform to the proposed channel geometry. Work shall be completed at City cost.

(3) Additional Levee Repair Work in 2019: City understands Valley Water contractors removed and replaced levees along Lower Berryessa Creek in 2019 to correct deficiencies from this project. The additional levee repairs occurred on Lower Berryessa Creek from May to December 2019 and included removal of City recreational trail facilities including asphalt surfaces recently installed by Valley Water from North Milpitas Boulevard east to the City's pedestrian bridge structure. Valley Water agrees to replace these asphalt trail surfaces in-kind at the conclusion of the levee work at City cost.

(4) Valley Water agrees to complete asphalt trail surfaces from Abel Street to North Milpitas Boulevard, and from the City's pedestrian bridge structure to Calaveras Boulevard. City and Valley Water agree that the asphalt trail work will be completed during construction of the LCC project at City cost.

(5) Valley Water will replace existing fencing and gates along City streets and trails with black vinyl fencing. City performed a final walk at the completion of construction and issued a punch list to replace the existing fencing and gates to Valley Water in January 2020. Valley Water shall make the punch list corrections agreed to by Valley Water and City. Replacement fence work shall be completed at Valley Water cost.

b. For the LCC Project, Valley Water will:

(1) Construct standalone headwalls adjacent to North Milpitas Boulevard and Arizona Avenue in accordance with Section 3.f, including the removal and replacement of City curb, gutter,

sidewalk, and driveway aprons to the limits required for Valley Water to complete its work and in compliance with City Standards.

(2) Valley Water will modify two (2) existing 15-inch and 18-inch storm drain outfalls and install two (2) new 18-inch and 36-inch outfall pipe extensions equipped with duckbill or flapgate check valves at City's cost.

(3) Valley Water shall perform work in accord with the set of plans that are approved by the City prior to advertisement, bid, and award of a construction contract by Valley Water. Valley Water shall perform work in accord with city encroachment permit conditions and requirements, and applicable local and state regulations and statutes for Valley Water work within the City right of way. Valley Water shall provide the City with a reasonable schedule of the intended work. City shall complete permit review and approval within 6 weeks of receipt of permit application to further the timely completion of the construction schedule.

c. For the LPC Project, Valley Water will:

(1) Construct City Improvement Work, at City's cost, including:

(a) remove and replace three (3) existing 28-inch outfalls at California Circle Pump Station with new 36-inch outfalls equipped with duckbill check valves;

(b) remove and replace two (2) existing 18-inch outfalls at Abbot Avenue Pump Station with 24-inch outfalls equipped with duckbill check valves;

(c) Modify the existing 24-inch storm drain outfall, located between Interstate 880 and California Circle, equipped with duckbill check valve;

(d) remove and replace the existing City trail and existing irrigation adjacent to the trail with in-kind surface material and irrigation, as shown in Exhibit B.

(2) Valley Water shall construct a new access road for California Circle Pump Station, within City right of way at Valley Water cost.

(3) Valley Water shall perform work in accordance with City approved plans, Encroachment Permit conditions and requirements, and all applicable local and state regulations and statutes for Valley Water work within City right of way. Valley Water shall provide the City with a reasonable schedule of the intended work.

(4) If a water shut down is required, Valley Water agrees to complete this work at night or on weekends if requested by the City to minimize outages and impacts to City residents and businesses.

(5) LPC City Recreational Improvements Subject to The LPC Trail Agreement. All recreational improvements resulting from the LPC City Improvement Work are deemed “improvements” as that term is defined in Section 1(c) of the LPC Trail Agreement. Hence, the terms and conditions contained in the LPC Trail Agreement shall dictate the parties’ obligations with respect to the recreational improvements resulting from the LPC Projects.

(6) The City and Valley Water each desire to purchase real property and right of way from each other for the completion of their respective Capital Projects. City right of way includes Assessor’s Parcel Number (APN) 022-30-042, 022-30-041, 022-37-000, and 022-37-002 that Valley Water desires for the LPC Project. Valley Water right of way includes APN 086-37-018 that the City desires to acquire an easement from Valley Water for installation of a vehicular crossing over Penitencia East Channel. Both agencies agree to consider the transfers of right of way and will work cooperatively in the completion of the purchase agreements that will include both transactions. The City and Valley Water will present the proposed transfers of right of way to their respective elected body, council, or Board of Directors for consideration and approval within 6 months of execution of this Agreement. Neither agency’s proposed transfer of right of way shall be conditioned on the other agency’s proposed transfer of right of way.

It is understood Valley Water and City may require possession of owned parcels prior to agency approvals of the purchase agreement. The City and Valley Water agree to issue Permits for their projects within each agency respective right of way. The City’s Encroachment Permit for the LPC project will include the City’s conditional approval to construct Valley Water improvements upon City owned land pending completion of the land transfer purchase agreement.

d. Per Valley Water’s Coyote Watershed Aesthetic guidelines, the LCC and LPC Projects design shall incorporate black vinyl coated fencing and gates along the City’s street frontage at all intersections, and portions of trails within Valley Water maintenance access roads and Lower Calera Creek and Lower Penitencia Creek facilities where shown in Exhibit D. The black vinyl fencing will be provided at no cost to City and upon issuance of a Notice of Completion by Valley Water shall own and be maintained in kind by Valley Water. At the conclusion of construction, Valley Water staff shall coordinate to meet with City staff for the installation of City pad locks to be daisy chained with Valley Water locks at maintenance road gates.

e. City standard concrete or asphalt pavement driveway aprons shall be installed as part of the LCC and LPC Projects at all intersections of Valley Water maintenance access roads and City streets. Aprons will extend from City street to Valley Water maintenance gates.

f. As part of the LCC Project, it is necessary for Valley Water to construct, operate and maintain two (2) new standalone headwall structures ("Structure" - see Exhibit E), adjacent to but not attached or bearing against the City's North Milpitas Boulevard and Arizona Avenue Bridges (herein referred to as "Bridges") for the purpose of flood protection during a 100-year event. Valley Water shall not attach new headwall structures to City bridge structures. Damage to Valley Water's structure arising from future major repairs or improvements of the City's bridge shall not be the responsibility of the City except to the extent such damage is caused by the City's or its contractor's active negligence or willful misconduct. All improvements constructed adjacent to City roadways shall comply with City standard vehicle sight distance requirements as determined by the City Engineer in accordance with Section 3.b.(3) above. Work shall be completed at Valley Water cost.

g. Community Outreach. Valley Water shall provide project outreach to the City of Milpitas community along the length of the LCC and LPC Projects prior to the start of construction. Methods of outreach acceptable to the City include notices with social media platforms, Construction Notices mailed to residents and business along the LCC and LPC Projects, and community meetings. Community outreach methods shall be provided, and proof of such outreach shall be provided to the City. Valley Water shall provide Community Outreach through dissemination of Notices of Construction to residents adjacent to the project at least 30 calendar days prior to the start of work. Valley Water shall disseminate a second construction notice approximately two-weeks prior to the start of construction. Valley Water's Deputy Operating Officer shall coordinate with the City and provide a presentation to the City Council at least one month prior to the start of construction.

h. Valley Water shall maintain all newly installed floodwalls and retaining walls in a clean maintained appearance including graffiti removal.

4. City Design Review, Approval, and Construction Inspection

a. City's Review and Approval of Valley Water's Design Plans and Encroachment Permit Application

(1) Waiver of Permit, Land Use, Staff Review, and Construction Inspection Fees. In accordance with the "First Amendment to the Memorandum of Understanding (MOU) between Valley Water and the City of Milpitas for Waiver of Permit, Land Use, Staff Review, and Construction Inspection Fees," any fees by Valley Water and City for design review, permits, and construction inspection shall be waived for Designated Projects. Both the LCC and LPC Projects are designated projects listed in Exhibit B of the MOU, Items 2 and 3.

(2) City Improvement Design Review: City shall review each set of project plans and specifications presented by Valley Water within the time specified by this agreement for City review. City's design review is limited to City Improvements to be installed and will

include conformance with City Standards and public safety. The City will provide written approval of the City Improvement Design as shown on the project plans and specifications. The City shall complete its design review prior to Valley Water's Board adoption of plans and specifications.

(3) Encroachment Permit. Prior to starting LCC and LPC Project construction, or any work within City right of way, Valley Water shall obtain a City Encroachment Permit that shall be signed by Valley Water and its Contractor. City agrees that the permit term shall be effective until the Project is complete and accepted by Valley Water. Valley Water's contractor(s) shall provide copies of their Liability Insurance documents naming the City and its officers as additional insured and shall provide a Faithful Performance Bond naming the City of Milpitas as a co-obligee or dual obligee for the full value of the project.

(4) City Inspection. Valley Water shall ensure that all work completed by its Contractor(s) within City right of way or upon City owned infrastructure shall be inspected by the City's Public Works Construction Inspector to ensure the Contractor(s) performance according to the approved plans. Valley Water and the City agree to coordinate inspections such that both Valley Water and City inspection staff are present for all permit required inspections. City agrees to provide and conduct all requested inspections promptly and shall not unreasonably delay determinations and conclusions from said inspections.

(5) Valley Water shall provide quality control testing that shall be completed by a third-party testing lab for City Improvement Work. Both laboratory and field testing shall be provided for concrete, asphalt, and class II aggregate base to ensure the work is in compliance with Valley Water's Construction Documents and City Standards. Improvements not passing testing requirements shall be reworked by the Contractor until compliance with the project requirements.

5. Cost Sharing: Review, Approval and Payment for City Improvement Work

a. In consideration of the Valley Water's work described in Section 3.a through 3.g, City agrees to remit payment for the City Improvement Work identified in Exhibit F. Exhibit F is a Cost Estimate of City Improvement Work and Payment to Valley Water for the LBC, LCC and LPC Projects. City will reimburse Valley Water for the total cost of Valley Water's construction cost of the City Improvement Work as provided in an updated Exhibit F that will be based on actual bid pricing from the construction contract awarded for each respective creek project.

b. Valley Water has constructed the LBC Project and included each component of the LBC City Improvement Work as separate "bid items" in order to ascertain the bidders' proposed price for this work. Valley Water awarded the contract in July 2016 and completed the civil work in

July 2020. The attached Exhibit F reflects the actual bid pricing from the construction contract awarded for the LBC Project and requires no further update with respect to the LBC Project.

c. Valley Water will publicly bid the LPC and LCC Projects and include each component of the LPC and LCC City Improvement Work as separate bid items in order to ascertain the bidder's proposed price for this work.

d. Valley Water agrees to provide City with notice, documentation, and plans regarding any modifications, revisions, change orders, and/or extra work required for City Improvement Work within seven (7) calendar days of Valley Water becoming aware of or initiating such matter, so City can provide direction to Valley Water, if necessary and appropriate.

e. City will respond to Valley Water regarding such matters within seven (7) calendar days of receipt of such modification information and provide written direction to Valley Water, if necessary and appropriate.

f. Final Accounting & Payment for LPC Project. City agrees to remit payment of 10% of the costs outlined in the updated Exhibit F, as describe above in this subsection 5.a., within 30 business days of receiving a notice from Valley Water that Valley Water has awarded a construction contract for the LPC Project. Following Valley Water's satisfactory completion of City punchlist items for the LPC project as described in Sections 6.a to 6.e, City agrees to initially accept the constructed City improvements and remit payment of 80% of the costs outlined in the updated Exhibit F for the LPC within 30 business days of acceptance after the Upper Berryessa Creek condition in 5.h is met. At the completion of the 1-year warranty period and City's issuance of the Notice of Final Acceptance of the work, City will remit the remaining final 10% owed of the costs outlined in the updated Exhibit F for the LPC.

g. Final Accounting & Payment for LCC Project. City agrees to remit payment of 10% of the costs outlined in the updated Exhibit F for the LCC within thirty (30) business days of receiving a notice from Valley Water that Valley Water has awarded a construction contract for the LCC Project. Following Valley Water's satisfactory completion of punchlist items for the LCC project as described in Sections 6.a to 6.e, City agrees to initially accept the constructed City improvements and remit payment of 80% of the costs outlined in Exhibit F for the LCC within 30 business days of acceptance after the Upper Berryessa Creek condition in section 5.h is met. At the completion of the 1-year warranty period and City's issuance of the Notice of Final Acceptance of the work, City will remit the remaining final 10% owed of the costs outlined in Exhibit F for the LCC.

h. Final Accounting & Payment for LBC Project. City agrees to remit final payment to Valley Water for City Improvement Work constructed as part of LBC project after City acceptance of the resolution of the outstanding claim and punchlist work associated with the Upper Berryessa Creek (UBC) Project. An amount of $41,125 shall be deducted from the payment to Valley Water to reimburse City for its cost to replace the landscape damage from the UBC Project. Final payment shall be made

within thirty (30) business days after City's initial acceptance of City Improvement Work constructed as part of LCC project.

6. Completion and Acceptance

a. Valley Water shall provide a "Preliminary Notice of Completion" to City within seven (7) business days after completion of the Project improvements that will be owned by the City. The LCC, and LPC Projects will have different schedules so notification will be after each Project is completed.

b. City shall conduct, and Valley Water shall permit, within ten (10) business days thereafter (the "Inspection Period"), a final inspection of the Project improvements owned by the City.

c. If City determines that the City improvements have met the requirements in the plans and specifications for the LBC, LCC or LPC Projects approved by the City, the City will, no later than thirty (30 business days after receipt of the Preliminary Notice of Completion, provide Valley Water with written notice of its acceptance of the City Improvement Work for the subject project ("Notice of Acceptance").

d. If City reasonably determines that the City Improvement Work does not meet the requirements of the plans and specifications for the subject LBC, LCC or LPC Projects approved by the City, the City shall, no later than ten (10) business days after the close of the Inspection Period, provide Valley Water with a written enumeration of the reasons why the City Improvement Work does not comply with said plans and specifications. Any inspection items or concern identified by the City that are not a part of the approved plans or specifications or an approved change order will constitute a new request and shall not be treated as an identified City Improvement Work included in the Scope of Work of this Agreement. New requests from the City may be negotiated by the parties at Valley Water's discretion. Any new request, unless identified to address a valid public safety concern not resulting from prior direction by the City, shall be at the City's cost. The parties will thereafter confer within ten (10) business days to determine what additional matters should be addressed to bring the City Improvement into compliance with the plans and specifications (i.e., punchlist) for the subject LBC, LCC or LPC Projects approved by the City. Valley Water shall work with their contractor to make any agreed upon corrections as are necessary within a reasonable time that is allowed under regulatory permit conditions, as required by City Encroachment Permit to meet the terms of the plans and specifications.

e. Upon completion of the punchlist corrections, Valley Water shall again submit to City a Preliminary Notice of Completion. The process of inspection and acceptance set forth in the preceding paragraphs of this Section 6 will then apply to this subsequent Preliminary Notice of Completion and issuance of a Notice of Acceptance.

f. Following the City's acceptance of the City Improvement Work, a 1-year warranty period will commence for the City Improvement Work listed in Exhibit G. The 1-year warranty period will cover defects, as mutually agreed to by City and Valley Water, for City Improvement Work.

7. Record Drawings

Valley Water agrees to provide the City with electronic as-built record drawings for the projects including City Improvement Work in CAD format and PDF format within thirty (30) business days after Valley Water completes the as-built record drawings. The as-built documents may take up to 4 to 6 months to finalize after construction has completed. Upon completion of construction, Valley Water shall provide the City with two full-size sets of the contractors red-lined as-built drawings documenting all changes made during construction. Valley Water shall provide the City with two complete full-sized sets of final project record drawings including CAD files within 4-6 months after completion of construction activities.

8. Ownership of Improvements

Upon completion of the LBC, LCC and LPC Projects, the project improvements appurtenant thereto shall be the responsibility of Valley Water. The LBC, LCC and LPC Projects improves and modifies existing outfall structures as they tie-in to creek banks. Upon completion of the LBC, LCC and LPC Projects and acceptance of the outfall improvements by the City, the City shall own and maintain the newly constructed outfall structures and flap gates/check valves in perpetuity. Any utility, bridge, and other facilities which were owned by the City prior to the LBC, LCC and LPC Projects shall remain the property of the City. The City shall own and maintain the newly constructed City Improvement Work and trail improvements along the LBC and LPC (see Exhibit G) in perpetuity. The rights, duties, and obligations of the Parties as set forth above in Section 4.a.(1). will survive termination, expiration, and suspension of this Agreement.

9. Indemnification

In lieu of and notwithstanding the pro rata risk allocation, which might otherwise be imposed between the parties pursuant to Government Code Section 895.6, the parties agree that all losses or liabilities incurred by a party shall not be shared pro rata but, instead, Valley Water and City agree that, pursuant to Government Code Section 895.4, each of the parties hereto shall fully indemnify, defend, and hold each of the other parties, their officers, board members, employees, and agents, harmless from any claim, expense or cost, damage or liability imposed for injury (as defined in Government Code Section 810.8) occurring by reason of the negligent acts or omissions or willful misconduct of the indemnifying party, its officers, employees, contractors, or agents, under or in connection with or arising out of any work, authority, or jurisdiction delegated to such party under this Agreement. No party, nor any officer, board member, or agent thereof shall be responsible for any damage or liability occurring by reason of the negligent acts or omissions or willful misconduct of the other party hereto, its officers, board members, employees, contractors, or agents, under or in connection with or arising out of any work, authority or jurisdiction delegated to such other party under this Agreement. Further, Valley Water shall require its

contractor(s) to indemnify, defend and save City harmless to the same extent that Valley Water is indemnified under the contract between Valley Water and its contractor(s). The obligations set forth in this paragraph will survive termination, suspension, completion and expiration of this Agreement.

10. Term and Termination

a. The term of this Agreement will commence on the Agreement Effective Date and shall terminate when the LBC, LCC and LPC Projects are completed, upon City acceptance of City Improvement Work, and receipt by Valley Water of full payment from the City for Valley Water's reasonable costs for design, construction, and construction management on the City Improvement Work. Full payment to Valley Water from the City for Valley Water's reasonable costs for design, construction, and construction management on the City' Improvement Work shall be as outlined in Sections 5.f, 5.g, and 5.h. Valley Water and City may mutually agree to extend the term of this Agreement.

b. The Agreement can be terminated only upon mutual written consent upon terms acceptable to both parties. Except for breach by District of this Agreement, City shall reimburse District for its reasonable costs in performing the City Improvement Work up to the termination date of this Agreement.

11. Insurance, Bonds, Risk of Loss, Damage to City Property, and Warranty

a. During construction and until acceptance of either the LBC, LPC, or LCC Project by Valley Water's Board of Directors, Valley Water assumes and shall bear all risk of loss, injury, damage or destruction to the City property (including, without limitation, City Improvement Work and any construction work in progress, materials, improvements, machinery and equipment). Notwithstanding the foregoing, should Valley Water encounter pre-existing material reasonably believed to be toxic waste and hazardous materials which have not been rendered harmless on City-owned property, Valley Water shall immediately stop work at the affected site and shall report the condition to the City in writing. The City shall have the option of separately contracting for any services required to directly remove and/or abate the toxic wastes and hazardous materials, if required, or may request Valley Water to perform the same with its contractor at City's cost. The work in the affected area shall not thereafter be resumed except by agreement of the City. Valley Water shall not be responsible for the cost of removal or abatement of any such pre-existing toxic wastes and hazardous materials except where the presence or further spread of such pre-existing toxic wastes or hazardous materials is attributable to Valley Water or its contractor's acts or omissions.

b. Valley Water shall be responsible for all damages to persons or property that occurs as a result of its work and the work of its contractors covered by this Agreement, except damage or injury caused by City of Milpitas' negligence or willful misconduct. Without limiting the foregoing, Valley Water shall remedy at its expense any damage to persons or property, including City-owned or controlled real or personal property, caused by or

resulting from the negligent acts or omissions of Valley Water, its officials, officers, contractors, consultants or agents, except damage or injury caused by City of Milpitas' negligence or willful misconduct. The City shall notify Valley Water, in writing, within a reasonable time after the discovery of any failure, defect, or damage caused by or resulting from the acts or omissions of Valley Water, its officials, officers, contractors, consultants or agents. After being notified, Valley Water shall perform with due diligence all necessary remediation work if Valley Water determines the failure, defect, or damage was caused by Valley Water's negligence. If Valley Water is not at fault as determined by a mutually agreed upon dispute resolution process in accordance with paragraph 12 below, Valley Water may decide to proceed with the remediation work. Upon completion of remediation work, City shall reimburse Valley Water for that portion, if any, of the remediation work caused by City's negligence or willful misconduct. If Valley Water is deemed to be partially at fault, and fails to promptly remedy any defect or damage; the City shall have the right to replace, repair or otherwise remedy the defect or damage, and then withhold any payment due Valley Water, but only in the amount of the cost to remedy the defect, or seek reimbursement from Valley Water to the extent that Valley Water is at fault.. In the event of any emergency constituting an immediate hazard to health, safety or property, the City may undertake at Valley Water's expense, and without prior notice, all work necessary to correct such condition.

c. Valley Water shall require its contractor(s) to procure prior to commencement of construction of the LCC and LPC Projects and maintain for the duration of the LCC and LPC Projects the following types and limits of insurance in connection with the performance of the LCC and LPC Projects by Valley Water's contractor(s):

Coverage Type and Scope	Minimum Coverage Limits
Commercial general liability coverage (Insurance Services Office occurrence form CG 0001), including liability coverage for premises and operations, explosion and collapse hazard, underground hazard, products/completed operations hazard, contractual liability, use of independent contractors, and broad form property damage with completed operations	$5,000,000 per occurrence and in the aggregate for general liability, bodily injury, personal injury, and property damage
Automobile liability (Insurance Services Office form CA 0001, code 1, any auto)	$5,000,000 per accident for bodily injury, including death, and property damage
Workers' compensation	Statutory limits required by State of California
Employers' liability	$1,000,000 per accident for bodily injury or disease

(1) Valley Water shall require its contractor(s): (1) to add the City and its officers, officials, employees, agents and authorized volunteers as additional insureds on the contractor's commercial general

liability (using ISO CG 20 38 for ongoing operations, as well as ISO CG 20 37 for completed operations or endorsements at least as broad) and business automobile liability policies; (2) to provide a waiver of subrogation in favor of City and its officers, officials, and employees on the contractor's commercial general liability, business automobile liability and workers' compensation/ employer's liability policies; and (3) to provide all coverage under the commercial general liability and business automobile liability policies on a primary and non-contributory basis. The coverage provided by the Valley Water's contractor shall contain no special limitations on the scope of protection afforded the City. After execution of this agreement, Valley Water shall forward a copy of its contractor's proof of insurance on ACORD Form 25-S and all necessary endorsements required herein. Any greater levels of coverage or endorsement requested by the City shall be paid for by the City.

(2) For the LBC project that has completed construction, Valley Water's contractor has provided coverage: (1) to add the City and its officers, employees, agents and authorized volunteers as additional insureds on the contractor's commercial general liability and business automobile liability policies; (2) to provide a waiver of subrogation in favor of City and its officers, and employees on the contractor's commercial general liability, business automobile liability and workers' compensation/ employer's liability policies; and (3) to provide all coverage under the commercial general liability and business automobile liability policies on a primary and non-contributory basis. The coverage provided by the Valley Water's contractor shall contain no special limitations on the scope of protection afforded the City.

(3) Valley Water will require its contractor(s) to post a performance bond, letter of credit or other financial security (the "Performance Bond") in a sum equal to a minimum 100% of the estimated cost of the applicable LCC and LPC Projects. The Performance Bond will be for the purpose of insuring the proper completion of the subject Project(s). If Valley Water's contractor fails to complete the subject Project(s) covered by the Performance Bond in accordance with the construction contract, Valley Water agrees to diligently pursue and enforce its and the City's remedies under the Performance Bond. For the LPC and LCC Project construction agreement, Valley Water also agrees to require its contractor and contractor's surety to name the City as co-obligee on the Performance Bond or to add City as an obligee through a co-obligee or dual obligee rider.

d. Valley Water will require its contractor(s) to warranty all materials and workmanship furnished in the construction of the City Improvement Work for one year from the date of Valley Water's issuance of the Notice of Completion. Valley Water shall manage and oversee the City's warranty rights related to the City Improvement Work and pursue and enforce the

warranty for defects in workmanship or materials and require the construction contractor to repair or replace the defective work so that it complies with the City Improvement Work plans and specifications reviewed and approved by the City. Valley Water shall not be obligated to pursue any warranty rights for defects in workmanship or materials that Valley Water reasonably determines are beyond or outside the provisions of the approved plans and specifications provided that any dispute regarding the same shall be submitted to the dispute resolution process under Section 12 below.

12. Disputes

a. This Agreement requires that City and Valley Water work together in good faith to achieve the intent of this Agreement. In the event a dispute arises as to the proper interpretation of the respective obligations and responsibilities of the Parties under this Agreement, or as to any other aspect of this Agreement, City and Valley Water agree that they each will assign the appropriate individuals to meet and make good faith efforts to negotiate a resolution of the dispute.

b. If after employing this informal resolution process either City or Valley Water may request an independent, mutually agreed upon mediator to facilitate further negotiation with the costs shared equally between each Party. However, nothing herein will prevent either City or Valley Water from exercising any rights it may have to enforce the terms of this Agreement at law or in equity.

13. Assignability

Both City and Valley Water agree that each party's responsibilities as detailed herein have been determined in their mutual best interest toward accomplishing LBC, LCC and LPC Projects completion. Without the written consent of the other, neither City nor Valley Water will assign or transfer any interest in this Agreement or any of the obligations hereunder except to contractors or consultants working directly for them. Any unauthorized attempt by City or Valley Water to assign or transfer will be void and of no effect.

14. Written Notices

Except as otherwise specifically described herein, all communications with respect to this Agreement shall be given by first class mail to the parties as follows:

Valley Water	City
Rechelle Blank, P.E. Deputy Operating Officer Valley Water 5750 Almaden Expressway San Jose, CA 95118	Steven Erickson, P.E. Engineering Director/City Engineer City of Milpitas 455 E. Calaveras Blvd. Milpitas, CA 95035-5411
Or to such other person, addresses, or telephone numbers as the parties may designate in writing from time to time.	

15. Severance of Invalid Terms

If any term, condition or covenant of this Agreement is held by a court of competent jurisdiction to be illegal, invalid, void or unenforceable, the remaining provisions of this Agreement shall be valid and binding on Valley Water and City, unless an essential purpose of this Agreement would be defeated by the loss of the illegal, invalid, void or unenforceable provision.

16. No Implied Waiver

The waiver by either City or Valley Water of any breach of any term, covenant, or condition contained in this Agreement, or any default in the performance of any obligations under this Agreement, shall not be deemed to be a waiver of any other term, covenant, condition, or obligation. Nor shall any waiver of any incident of breach or default constitute a continuing waiver of the same.

17. Governing Law and Compliance with Laws

This Agreement shall be constructed in accordance with the laws of the State of California. In the performance of this Agreement, City and Valley Water will comply with all applicable laws, ordinances, codes and regulations of the federal, state, and local governments.

18. Venue

In the event that suit is brought by either City or Valley Water, each agrees that venue will be exclusively vested in the state courts of either the County of Santa Clara, or in the United States Court, Northern Valley Water of California, in San Jose, California.

19. Nondiscrimination

a. In the performance of the Agreement, the parties will comply with all applicable federal, state, local laws and regulations, and will not discriminate against any contractor, subcontractor, employee, or applicant for employment, in the recruitment, hiring, employment, utilization, promotion, classification or reclassification, transfer, recruitment advertising, evaluation, treatment, demotion, layoff, termination, rates of pay or other forms of compensation, and selection for professional development training (including apprenticeship), or against any other person, on the basis of sex (which includes pregnancy, childbirth, breastfeeding and medical conditions related to pregnancy, childbirth or breastfeeding), race, religion, color, national origin (including language use restrictions), ancestry, religious creed (including religious dress and grooming practices), political affiliation, disability (mental and physical, including HIV or AIDS), medical condition (cancer and genetic characteristics), genetic information, marital status, parental status, gender, age (40 and over), pregnancy, military and veteran status, sexual orientation, gender identity and gender expression, the exercise of family and medical care leave, the exercise of pregnancy disability leave, or the request, exercise, or need for reasonable accommodation.

b. Compliance with Applicable Equal Opportunity Laws. The City's policy must conform with applicable state and federal guidelines including the Federal Equal Opportunity Clause, "Section 60-1.4 of Title 41, Part 60 of the Code of Federal Regulations," Title VII of the Civil Rights Act of 1964 as amended; the American's with Disabilities Act of 1990; the Rehabilitation Act of 1973 (Sections 503 and 504); the Age Discrimination Act of 1975 (42 U.S.C. sec. 6101 et seq.); California Fair Employment and Housing Act (Government Code Section 12900 et. Seq.); California Labor Code Sections 1101 and 1102.

c. Investigation of Claims. City must designate a specific position within its organization to be responsible for assuring nondiscrimination and non-harassment as provided in this Agreement. City must investigate all complaints directed to it by District. District will refer complaints in writing and City will advise District in writing when such investigations are concluded. The scope of such investigations must include all appropriate officers, employees, and agents of the City, as well as all contractors, subcontractors, consultants, subconsultants, and material suppliers of the City. In cases where such investigation results in a finding of discrimination, harassment, or hostile work environment, City must take prompt, effective disciplinary action against the offender.

20. Ownership of Materials

Except as otherwise set forth herein, all design and construction documents related to the LBC, LPC, and LCC Project improvements developed or discovered by Valley Water or any other person engaged directly or indirectly by Valley Water to perform the services required hereunder will be and remain the property of the Valley Water. City and Valley Water will make available to the other party such other records under its control as may be reasonably required for the parties to perform under this Agreement. City and Valley Water will maintain all documents and records produced under this Agreement for a minimum period of three years, or any longer period required by law, from the date of termination or completion of this Agreement.

21. Execution in Counterparts

This Agreement may be executed in counterparts, each of which, when executed and delivered, will be deemed to be an original, and which taken together will be deemed to be one and the same instrument, and will be binding as executed.

22. No Third Party Beneficiaries

This Agreement is entered into only for the benefit of the parties executing this Agreement and not for the benefit of any other individual, entity, or person.

23. Compliance with Other Conditions

Valley Water acknowledges that the authorization contained herein is in addition to and not in lieu of any other easements, inspections, or approvals which Valley Water may need to obtain from City, from other utility providers, or from property owners with respect to its construction of the LBC, LCC and LPC Projects. In

consideration of the numerous benefits to be gained by the City from Valley Water's construction of City Improvement Work and LBC, LPC, and LCC Project improvements, any land use along City right of way, inspections, or approvals to be granted or conducted by the City shall be at no cost to Valley Water in accordance with the MOU as set forth in Section 4.a.(1). of this Agreement.

24. Successors and Assigns

This authorization will bind and inure to the benefit of the parties, the respective heirs, successors and assigns.

25. Exhibits

The following Exhibits are attached hereto and incorporated herein by this reference:

- Exhibit A: LBC Trail Agreement
- Exhibit B: LPC Trail Agreement
- Exhibit C: LCC and LPC City Approved Drawings for Improvement Removal and Replacement
- Exhibit D: LCC and LPC Extent of the Black Vinyl Fences
- Exhibit E: LCC Headwall Structure at North Milpitas Boulevard and Arizona Avenue
- Exhibit F: Estimated Cost of City Improvement Work and Payment to Valley Water
- Exhibit G: LCC and LPC List of City Improvement Work

26. Construction of Agreement

The parties hereto acknowledge and agree that, although this Agreement has been drafted by Valley Water's legal counsel, City has had an opportunity to review and negotiate the terms of this Agreement as well as consult with City's own legal counsel regarding the meaning of its terms. Consequently, the doctrine that ambiguities in an agreement should be resolved against the drafting party shall not be employed in connection with this Agreement, and this Agreement shall be interpreted in accordance with its fair meaning.

27. Amendments

All modifications to this Agreement must be in writing in the form of an amendment approved by both parties.

(REMAINDER OF PAGE INTENTIONALLY LEFT BLANK)

28. Entire Agreement

This Agreement constitutes the entire agreement between the parties pertaining to the subject matter contained therein and supersedes all prior or contemporaneous agreements, representations and understandings of the parties relative thereto, except for the LBC Trail Agreement, attached hereto as Exhibit A, and the LPC Lease Agreement Joint Use, SCVWD Agreement No. A2001, attached hereto as Exhibit B.

(SIGNATURES FOLLOW ON NEXT PAGE)

(REMAINDER OF PAGE INTENTIONALLY LEFT BLANK)

IN WITNESS WHEREOF, the above parties have executed this Agreement the day and year last written below.

VALLEY WATER, A SPECIAL DISTRICT CREATED BY THE CALIFORNIA LEGISLATURE:

APPROVED AS TO FORM:

By: _____
Joseph D. Aranda
Assistant District Counsel

By: _____
Nai Hsueh
Chair, Board of Directors

By: _____
Michele L. King, CMC
Clerk, Board of Directors

Date: _____

CITY OF MILPITAS, A MUNICIPAL CORPORATION:

Recommended by:

_____
Steven Erickson
Engineering Director/City Engineer

Attest:

_____
Mary Lavelle
City Clerk

APPROVED AS TO FORM:

By: _____
Christopher J. Diaz
City Attorney

By: _____
Steven McHarris
City Manager

By: _____
Walter C. Rossman
Director of Financial Services

Date: _____

EXHIBIT A
LBC Trail Agreement

File: City of Milpitas
Berryessa Creek
X-File: 4017-42, 44, 48, 52

JOINT USE AGREEMENT
Berryessa Creek Trail

SANTA CLARA VALLEY WATER DISTRICT, a public corporation, hereinafter referred to as "District", and the CITY OF MILPITAS, hereinafter referred to as "City", agree this 4th day of September, 2002 as follows:

RECITALS

A. District is the owner of certain real property (hereinafter "the premises"), along Berryessa Creek between North Abel Street and North Hillview Drive, described on EXHIBIT A attached hereto, so marked and by this reference made a part hereof.

B. City and District recognize that the premises are regulated by a variety of federal, state and local agencies.

C. City and District, in cooperation with the U.S. Army Corps of Engineers, the California Department of Water Resources and the California Department of Fish and Game, agree to use the premises for non-vehicular (except for maintenance, emergency and enforcement vehicles) and recreational purposes as well as for flood control and water conservation purposes.

D. The parties find it to be in the public interest to provide for joint use of the premises through the terms and conditions of an Agreement.

AGREEMENT

1. District shall and does hereby grant permission to City to use the premises for the following purpose or purposes and subject to the following special restrictions:

   a. Enter the premises for purposes set forth in the Agreement.
   b. Operate and oversee the premises for public use for non-vehicular recreational purposes, subject to the terms and conditions set forth in this Agreement.
   c. Install as needed, and as approved by District permit, and maintain at City's own expense, paving, pedestrian bridge, ramps, stairs, gates, signs, fencing, trash receptacles and related amenities (hereinafter "improvements").
   d. Entry of motor vehicles, dogs or other domestic animals (except on leash), swimming, boating, rafting and fires are not permitted hereunder and such uses shall be effectively controlled by City.

2. City shall provide and maintain garbage receptacles for public use, and provide for adequate waste removal service. City shall also provide graffiti removal within the premises in compliance with City's graffiti abatement program, including graffiti removal from signs installed in conjunction with and/or accessory to the establishment of a public park and pathway consistent with its implementation of the same program at comparable City facilities.

3. The public pathway and corridor, the subject of this Agreement, may be patrolled by City personnel, ranger services under contract with City and/or volunteers supervised by City. District shall have no obligation whatsoever to provide or pay for such services.

4(a). City must remove and, if it so chooses, replace recreational improvements installed by the City in the event District requires such removal to improve, maintain, or repair Berryessa Creek in any manner for District purposes. If removal is not required by District, the City shall compensate the District for costs to remove, redesign, replace, or modify District facilities to accommodate continued use or presence of City's improvements. District shall inform City of pre-construction planning, as described in Section 6, in the event a District project is needed, to minimize District's project impact on City's public pathway and financial investments.

4(b). District is planning to implement a major flood protection improvement project within the premises. District and City intend to include in the plans a bicycle-pedestrian trail that will also support District operations and maintenance functions. City will collaborate with District in such flood protection and trail planning for Berryessa Creek. City has prepared "Berryessa Creek Trail and Coyote Creek Trail Feasibility Report" describing a proposed trail alignment, a trail underpass at North Milpitas Boulevard and other desired features for consideration. City and District propose to develop an appropriate cost-sharing arrangement to address the interests of both agencies in providing public trail access to the premises.

5. Damage occurring to City's structures or paving by reason of District's maintenance or other activity or by reason of natural forces will not be the responsibility of District to repair or restore; all such costs for such repair or restoration are to be borne by City.

6. City and District shall meet whenever necessary for the purposes of scheduling routine maintenance, including but not limited to:

   a. Maintenance issues related to improvements.
   b. Method and timing of issues related to affected wildlife.
   c. Non-emergency work requiring the use of heavy equipment, barricading, and/or restricting access to the premises. District and City further agree to notify one another's designated representative as required prior to commencement of such work, in order to minimize public impacts and damage to City's and District's improvements.
   d. In an emergency situation, District shall have rights provided in Paragraph 13 without consulting City.

7. City and District recognize the unique nature of the resources and recreational uses covered by this Agreement and the beneficial effects to both parties of providing these resources to the public. City and District resolve to utilize their respective offices to mutually support the efforts of each other to deliver such services to the public. City and District further agree to cooperate in order to resolve disputes and assist each other in responding to public inquiries arising from the activities of the parties of either team.

   City will encourage volunteer groups to participate in District's "Adopt-A-Creek" program.

8. Native plants selected by a licensed landscape architect with native habitat experience or other qualified professional should be used for revegetation purposes.

9. Construction work during spring nesting season will be avoided whenever possible. The parties acknowledge that spring nesting season occurs between February 1 and July 1. If construction must be done during the nesting season, a survey by a qualified biologist will be undertaken to determine the presence of nesting activity. If no nesting activity is reported, then the work may proceed. If nesting activity is reported, the biologist is expected to recommend the implementation of adequate mitigation measures. Environmental impact shall be considered prior to all work. Any and all work related to this clause shall be completed in accordance with applicable federal, state, and local environmental health and safety regulations including the federal Migratory Bird Act of 1918 and any amendments thereto.

10. The parties shall cooperate to create and install signage which benefits the programs of each party such as warning signs, entrance signs, interpretative signs, and joint uses when applicable. The Chief Executive Officer of the District and the City Manager of the City or their designees shall meet and confer on a periodic basis to plan and install appropriate signage which serves the needs of both parties.

    All signs excepting existing ones or publications that identify the facility (e.g., park, trail) by name should include the District's logo in equal size and symmetric relationship to any other logos. All signs or publications that are intended to interpret the water resources should be developed in cooperation with the District's Public Information Office and should also include the District's logo in equal size and symmetric relationship to any other logos. Maintenance responsibility for signage and benches shall be the responsibility of either the District or the City, according to which entity has installed the improvements.

11. This Agreement shall be for a period of twenty-five (25) years beginning on the date it is approved by the District Board of Directors. City may, upon written notice to District of intent to do so, given not less than ninety (90) days prior to the termination date, renew this Agreement for a like period upon the same terms and conditions. Notice of intent to renew may be given by the City's Public Works Director or City Manager for City. It is understood and agreed that this Agreement may be superseded and incorporated into any future joint use agreement or lease arrangement with the City along Berryessa Creek.

12. City shall have the full control and authority, for purposes of this Agreement, over the use of the premises, and City may restrict, or control, regulate and supervise the public use thereof. City may, in its discretion but consistent with the right of District hereinafter described, and without diminution of the environment, flood control or conservation function or hazard thereto of the premises as now existing or as may hereinafter be altered, take any measures of every kind as may in the opinion of City be necessary for the safety of the users of the premises for any joint use agreement purpose. Further, City shall have the sole responsibility for the maintenance in usable and safe condition of every facility provided upon the premises for purposes of this Agreement.

13. District shall have the sole responsibility to maintain Berryessa Creek for flood control, water conservation and stream stewardship purposes, to repair and reconstruct the same where necessary for such purposes and to perform such periodic maintenance as may be appropriate to such purposes, including removal of silt, debris, and obstructive growth. It is expressly understood that District is engaged in flood control and the conservation of water and that the terms and conditions of this Agreement shall not in any way interfere with the absolute, free and unrestricted right of District to operate and maintain for its purposes the stream bed and banks or any appurtenant works thereto, or to repair or construct any of its works, or to raise or lower the height of the water present upon the premises; and it is further understood that nothing herein contained shall be construed as conferring a right upon City to have or a duty upon District to provide water upon the premises at any time. Damage to District's facilities arising from use of the premises by the public or by City representatives under this Agreement shall be the responsibility of the City.

14. It is also expressly understood by City that the level of water upon the premises may fluctuate from day to day due to controlled or uncontrolled flows upon and across the same, and that such fluctuations may require greater control over the use of the premises by City, and the public; provided, however, that City shall be responsible for informing itself thereof and of all other conditions of the premises whether open or covered which may in anywise affect the health and safety of the users of the premises hereunder.

15(a). City shall have the right to build any improvements on the premises necessary or convenient to the enjoyment of this Agreement, provided the location of any such improvement is, in each case during the term of this Agreement, first approved by District. It is fully understood and agreed that District's basis of approval or disapproval of improvements is its responsibility to insure that the same shall not constitute an obstruction to flood flows and shall not interfere with the use of the premises for flood control or water conservation purposes, and does not in anywise extend to

consideration of the health and safety of users of the premises, which latter consideration is the responsibility of the City.

(b). Improvements built by City on the promises shall remain the property of City and upon the termination of this Agreement shall be removed by City, leaving the premises in a condition as near as reasonably possible to its condition prior to such improvements. If District, in the interest of health and safety and in the exercise of lawful powers, requires that such an improvement must be removed or relocated, the same shall be done at City's expense.

16(a). City shall assume the defense of, indemnify and hold harmless, District, its officers, agents, and employees from all claims, liability, loss, damage, and injury of any kind, nature, or description directly or indirectly arising during the initial term of this Agreement, or any renewal thereof, and resulting from the public use of the premises pursuant hereto or from public use of adjacent premises of District occurring in consequence of City's or the public's use of the premises or from acts, omissions, or activities of City's officers, agents, employees, or independent contractors employed by City, excepting claims, liability, loss, damage, or injury which arise from the willful or negligent acts, omissions, or activities of an officer, agent, or employee of District. This Agreement to defend, indemnify, and hold harmless the District shall operate irrespective of whether negligence is the basis or the claim, liability, loss, damage, or injury and irrespective of whether the act, omission, or activity is merely a condition rather than a cause.

(b). District shall assume the defense of, indemnify, and hold harmless, City, its officers, agents, and employees from all claims, liability, loss, damage, and injury of any kind, nature or description directly or indirectly arising from District's exercise of its flood control or water conservation purposes on the premises pursuant hereto or from acts, omissions, or activities of District's officers, agents, employees, or independent contractors employed by District excepting claims, liability, loss, damage, or injury which arises from the willful or negligent acts, omissions or activities of an officer, agent, or employee of City. This Agreement to defend, indemnify, and hold harmless shall operate irrespective of whether the act, omission, or activity is merely a condition rather than a cause.

17. Any and all notices required to be given hereunder shall be deemed to have been delivered upon deposit in the United States mail, postage prepaid, addressed to either of the parties at the address hereinafter specified or as later amended by either party in writing:

EXHIBIT A
LBC Trail Agreement (continued)

City	District
City Manager	Chief Executive Officer
City of Milpitas	Santa Clara Valley Water District
455 East Calaveras Blvd.	5750 Almaden Expressway
Milpitas, California 95035	San Jose, California 95118

18. This Agreement, and all the terms, covenants, and conditions thereof, shall apply to and bind the successors and assigns of the respective parties hereto; provided that City shall neither assign nor sublet this Agreement without prior written consent of District.

19. This Agreement includes any and all exhibits, covenants, agreements, conditions, and understandings between City and District concerning the premises. There are no covenants, agreements, conditions, or understandings, either oral or written, between the parties hereto other than herein set forth.

WITNESS THE EXECUTION HEREOF the day and year first hereinabove set forth.

CITY OF MILPITAS

By: Thomas J. Wilson
City Manager
"City"

SANTA CLARA VALLEY WATER DISTRICT,
a public corporation

By: Rosemary C. Kamei
Chair/Board of Directors
"District"

ATTEST:

Gail Blalock
City Clerk

ATTEST:

Lauren L Kelly
Clerk/Board of Directors

APPROVED AS TO FORM:

Peter E. Whitnell
Asst. City Attorney

A C Kennette
General Counsel

EXHIBIT A
LBC Trail Agreement (continued)

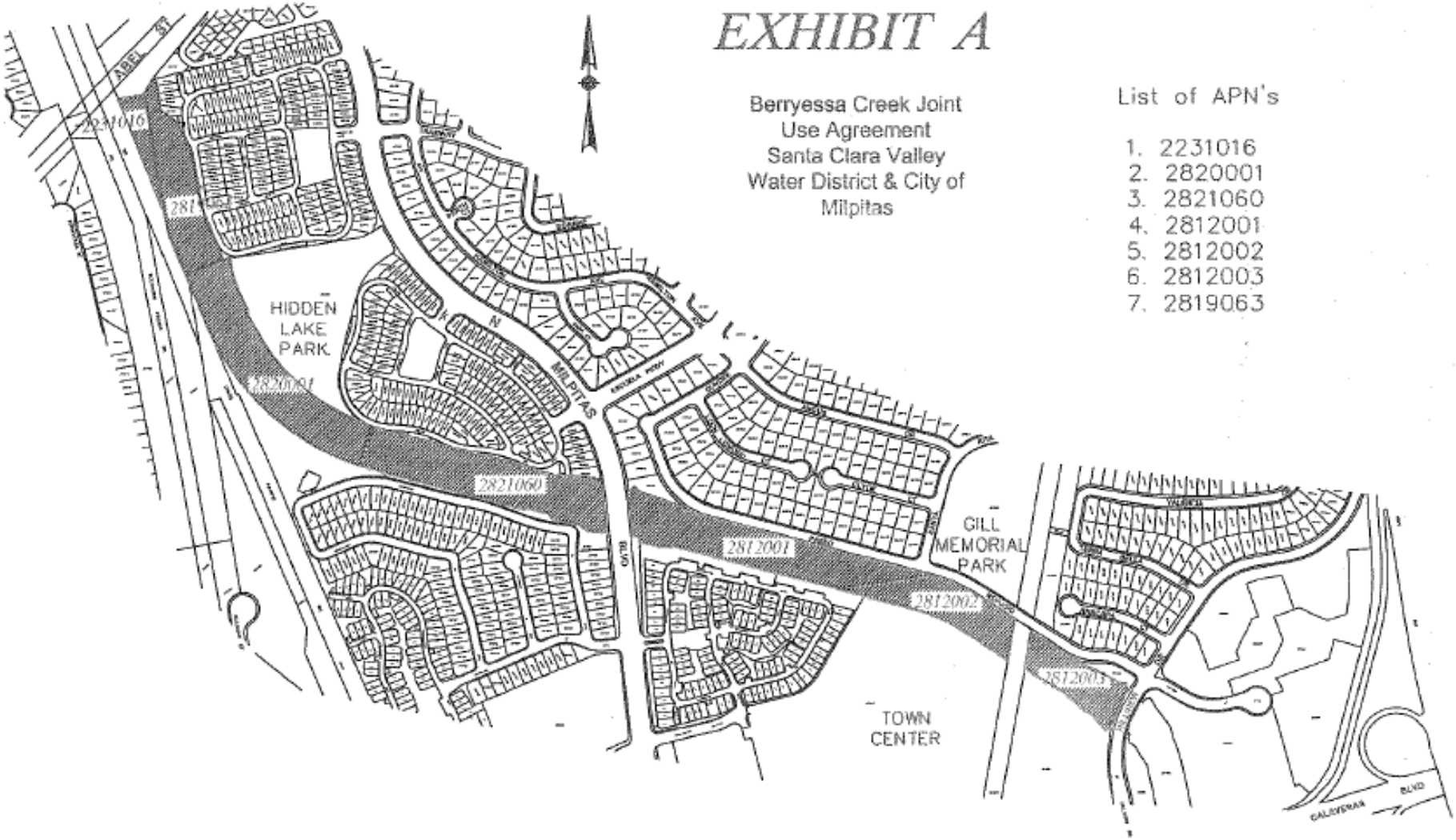

EXHIBIT B
LPC Trail Agreement

File: A/C Leases
City of Milpitas
X-File: 4033-49

LEASE AGREEMENT
(Joint Use)

SCVWD AGMNT. NO. A2001

SANTA CLARA VALLEY WATER DISTRICT, a public corporation, hereinafter referred to as "District," and the CITY OF MILPITAS, hereinafter referred to as "Lessee;"
AGREE this 7th day of JANUARY, 1997, as follows:

RECITALS:

A. District is the owner of certain real property identified as "SCVWD Penitencia Creek" shown on "Exhibit A" attached hereto and incorporated herein by reference. The cross-hatched areas within said real property as shown on Exhibit A constitute the leased premises (hereinafter "the premises") for the purpose of this agreement.

B. The parties find it to be in the public interest to provide for joint use of the premises by means of a lease thereof under the following terms and conditions.

C. Lessee has constructed certain improvements on premises by permit from District.

AGREEMENT:

1. District shall and does hereby lease the premises to Lessee for the following purpose or purposes and subject to the following special restrictions:

1(a). Pedestrian and emergency vehicle access on the west levee of Lower Penitencia Creek connecting North Abbott Avenue (at San Andreas Drive) to the new Milmont Drive/California Circle Bridge over the creek channel. Improvement to the top of levee shall be in accordance with District's requirements. Surfacing for the emergency vehicle access shall be all-weather with asphalt concrete or portland cement concrete. Any fencing shall be in accordance with District's permit requirements and with approval of Pacific Gas and Electric Company (PG&E).

1(b). Lessee has installed landscaping, drainage, and a pedestrian way on the east slope of the east levee of Penitencia Creek. Any landscaping or other improvements placed by Lessee pursuant hereto shall be maintained by Lessee.

1(c). Any improvement installed by Lessee shall be at Lessee's expense and shall be installed in accordance with District permit and with approval of PG&E or its successor.

1(d). Lessee shall comply with any and all requirements of PG&E, or its successor, to protect PG&E's facilities located within the premises. Lessee shall be responsible to take measures to protect the

RE1734p (01/01/93)

1 of 4

ORIGINAL

District, third parties and the public including, but not limited to installation or modification of safety devices, guardrails, etc., as determined necessary by PG&E to protect such persons. District shall assume no liability or responsibility for cost of same.

2. This Lease shall be for a period of 25 years, beginning on 7th of January, 1997. Lessee may, upon written notice to District of intent to do so, given not less than ninety (90) days prior to the termination date, renew this Lease for a like period upon the same terms and conditions. This Lease may be terminated without cause by either party upon ninety (90) days prior written notice to the other. Notice of intent to renew or to terminate may be given by Public Works Director for Lessee.

   Notice of intent to terminate may be given by the General Manager of District for the District.

3. Lessee hereby has full control and authority, for purposes of this Lease, over the use of the premises, and Lessee may restrict, or control, regulate and supervise the public use thereof. Lessee may, in its uncontrolled discretion (but consistent with the right of District hereinafter described, and without substantial or hazardous diminution of the flood control or conservation function of the premises as now existing or as may hereafter be altered), take any measures of every kind as may in the opinion of Lessee be necessary for the safety of the users of the premises for any lease purpose. Further, Lessee shall have the sole responsibility for the maintenance in usable and safe condition of every facility provided upon the premises for purposes of this Lease.

4. District shall have the sole responsibility to maintain Lower Penitencia Creek for flood control and water conservation purposes, and for such purposes only, to repair and reconstruct the same where necessary for such purposes and to perform such periodic maintenance as may be appropriate to such purposes, including removal of silt, debris, and obstructive growth. It is expressly understood that District is engaged in flood control and the conservation of water and that the terms and conditions of this agreement shall not in any way interfere with the absolute, free and unrestricted right of District to operate and maintain for flood control and water conservation purposes the stream bed and banks or any appurtenant works thereto, or to repair or construct any of its works, or to raise or lower the height of the water present upon the premises; and it is further understood that nothing herein contained shall be construed as conferring a right upon Lessee to have or a duty upon District to provide water upon the premises at any time. Damage to District's facilities arising from use of the premises under this Lease shall be the responsibility of Lessee.

5. It is also expressly understood by Lessee that the level of water upon the premises may fluctuate from day to day due to controlled or uncontrolled flows upon and across the same, and that such fluctuations may require greater control over the use of the premises by Lessee and the public; provided, however, that Lessee shall be responsible for informing itself thereof and of all other conditions of the premises whether open or covered which may in anywise affect the health and safety of the users of the premises hereunder; and provided, further, that Lessee shall not be responsible for mosquito control on the premises. District shall give reasonable notice to Lessee whenever District, in the exercise of its flood control or water conservation activities performs or intends to perform any major work of maintenance, repair or reconstruction (other than routine removal of silt, debris, and obstructive growth) on the premises or on any District works appurtenant thereto.

6(a). Lessee shall have the right to build or modify any improvements on the premises necessary, or convenient to the enjoyment of this Lease; provided, the location of any such improvement is, in each case during the term of this agreement is first approved by District. It is fully understood and agreed that District's basis of approval or disapproval of improvements is its responsibility to insure that the same shall not constitute an obstruction to flood flows and shall not interfere with the use of the premises for flood control or water conservation purposes, and does not in anywise extend to consideration of the health and safety of users of the premises, which latter consideration is the responsibility of Lessee. Lessee assumes responsibility for obtaining approval for proposed improvements from PG&E or any other entity having an easement or other right of way on the premises.

6(b). Improvements built by Lessee on the premises shall remain the property of Lessee and upon the termination of this Lease shall be removed by Lessee, leaving the premises in a condition as near as reasonably possible to their condition prior to such improvements. If District, in the interest of health and safety and in the exercise of lawful powers, requires that such an improvement must be removed or relocated, the same shall be done at Lessee's expense.

7. Lessee shall assume the defense of, indemnify, and hold harmless, District, its officers, agents, and employees from all claims, liability, loss, damage, and injury of any kind, nature, or description which directly or indirectly arises from Lessee's or the public's use of the leased premises or for public use of adjacent District lands occurring as a result of this agreement, excepting claims, liability, loss, damage, or injury which arises from the willful or sole negligent acts, omissions, or activities of an officer, agent, or employee of the District. This agreement to defend, indemnify, and hold harmless shall operate irrespective of whether the cause of the claim, liability, loss, damage, or injury is an act, omission or activity, or a condition of the property.

8. Any and all notices required to be given hereunder shall be deemed to have been delivered upon deposit in the United States mail, postage prepaid, addressed to either of the parties at the address hereinafter specified or as later amended by either party in writing:

Lessee	**District**
City of Milpitas 455 East Calaveras Boulevard Milpitas, California 95035	Santa Clara Valley Water District 5750 Almaden Expressway San Jose, California 95118

9. This agreement, and all the terms, covenants, and conditions hereof, shall apply to and bind the successors and assigns of the respective parties hereto; **provided**, that Lessee shall neither assign nor sublet this agreement without prior written consent of District.

EXHIBIT B
LPC Trail Agreement (continued)

WITNESS THE EXECUTION HEREOF the day and year first hereinabove set forth.

SANTA CLARA VALLEY WATER DISTRICT,
a public corporation

By: _____
"Lessee"
Lawrence Moore
City Manager

By: _____
Chair/Board of Directors
"District"

ATTEST:

_____
Gail Blalock
City Clerk

ATTEST: LAUREN L. KELLER

_____
Clerk/Board of Directors

APPROVED AS TO FORM:

_____
Attorney

APPROVED AS TO FORM:

_____
General Counsel

RE1734p (01/01/93)

4 of 4

EXHIBIT B
LPC Trail Agreement (continued)

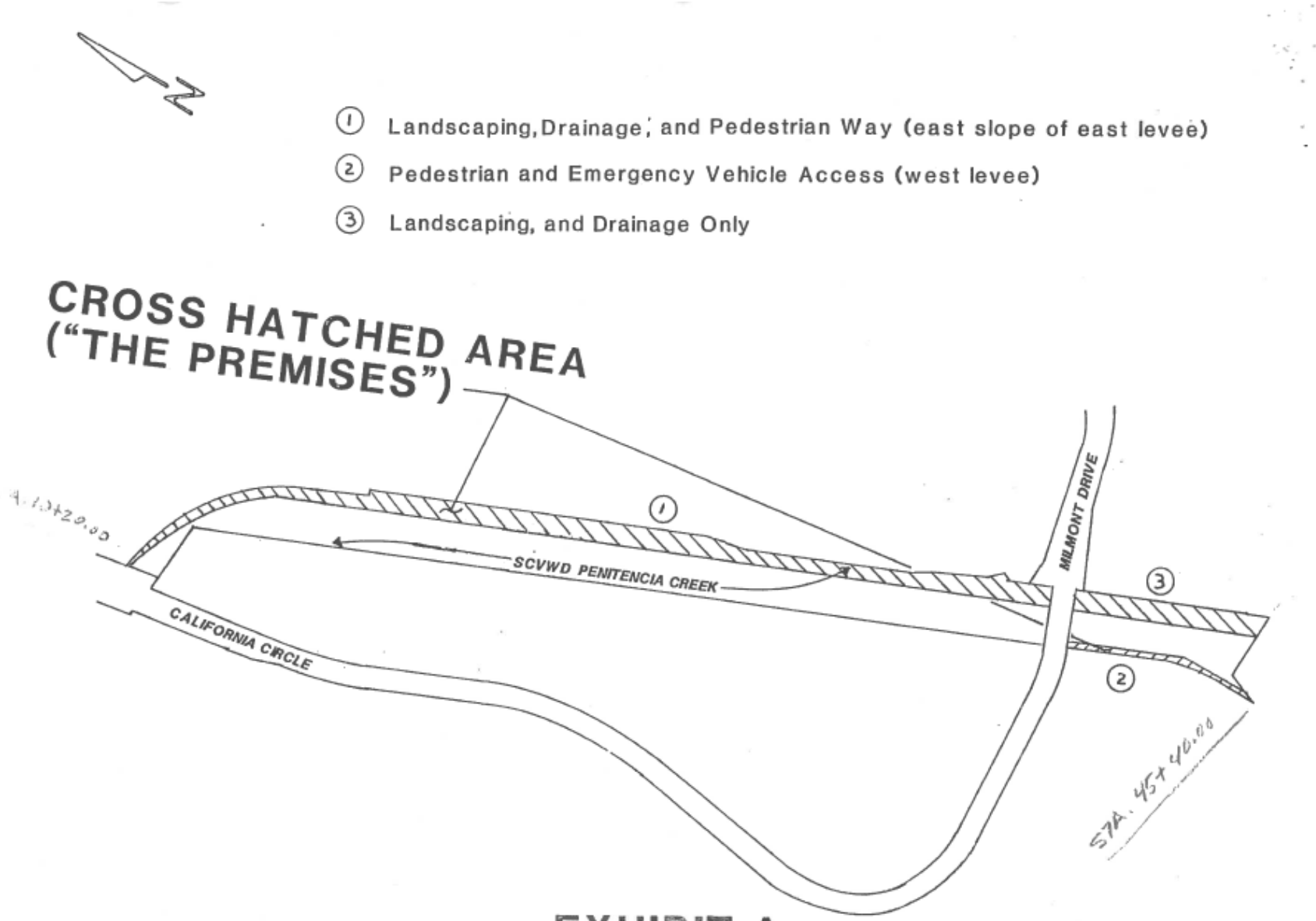

EXHIBIT A

File: A/C Leases
City of Milpitas
X-File: 4033-49

ADDENDUM TO LEASE AGREEMENT (JOINT USE) **SCVWD AGMNT. NO. A2001a**
Approved: 7th Jan, 1997

The following language shall be added to the Lease Agreement (Joint Use) dated July 19, 1996 between the Santa Clara Valley Water District, a public corporation, hereinafter referred to as "District," and the City of Milpitas, hereinafter referred to as "Lessee." The effective date of this addendum shall be the date of execution by the District's Chair/Board of Directors.

10. Lessee will encourage volunteer groups to participate in District's "Adopt-A-Creek" program as to the leased premises.

11. Native plants, selected by a qualified landscape architect and approved by District, shall be used for revegetation purposes by Lessee.

12. District and Lessee shall cooperate to create and install signage such as warnings, entrance signage, interpretive signs, and joint uses when applicable which benefits the programs of each party by identifying the respective interests in the particular facility. The General Manager of the District and the City Engineer of the City of Milpitas or their designees shall meet and confer on a periodic basis to approve appropriate signs which serve the needs of both parties.

13. The following language shall be added to clause 3 of said Lease Agreement (Joint Use): "For purposes of this agreement, the term 'maintenance' shall include immediate graffiti removal and/or abatement on any facility upon the premises for purposes of this Lease."

CITY OF MILPITAS

By: _____
"Lessee"
Lawrence Moore
City Manager

ATTEST: Gail Blalock

_____
City Clerk

APPROVED AS TO FORM:

_____
Dave Larsen, City Attorney

SANTA CLARA VALLEY WATER DISTRICT,
a public corporation

By: _____
Chair/Board of Directors
"District"

ATTEST: Lauren L. Keller

_____
Clerk/Board of Directors

APPROVED AS TO FORM:

_____
General Counsel

(Page 1 of 1)

5488agre.djf

EXHIBIT B
LPC Trail Agreement (continued)

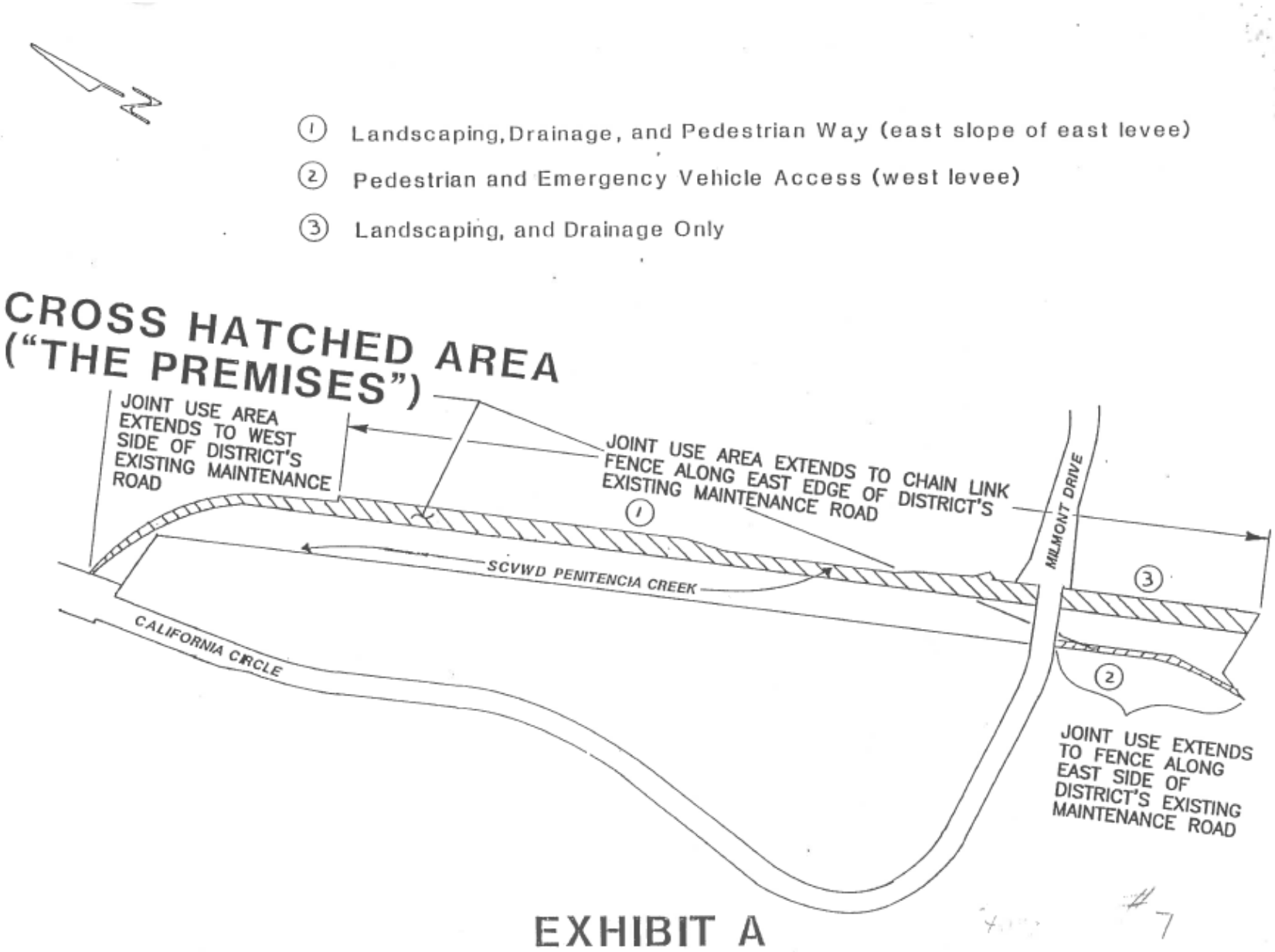

EXHIBIT B
LPC Trail Agreement (continued)

EXHIBIT C
LCC and LPC City Approved Drawings for Improvement Removal and Replacement

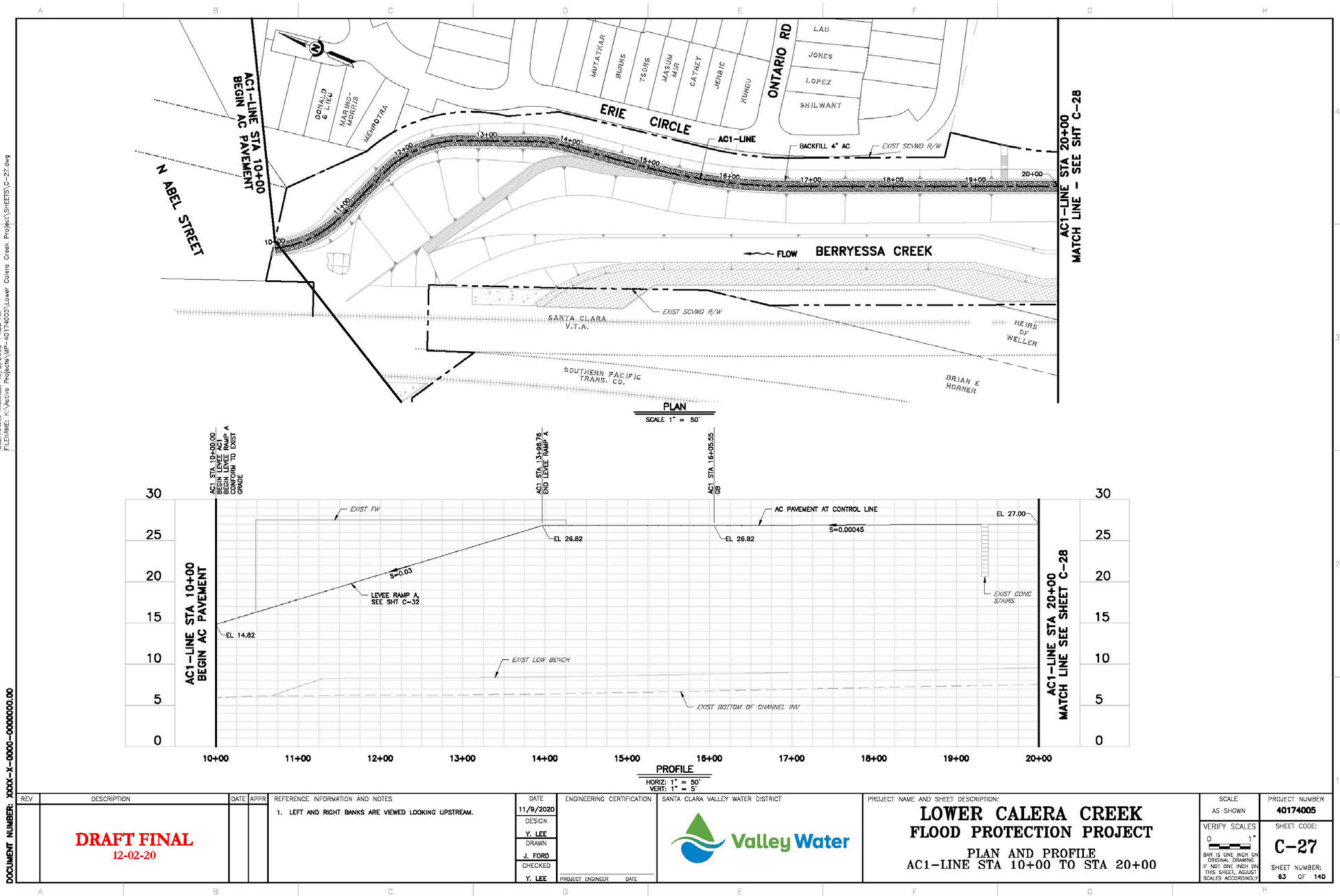

EXHIBIT C
LCC and LPC City Approved Drawings for Improvement Removal and Replacement (continued)

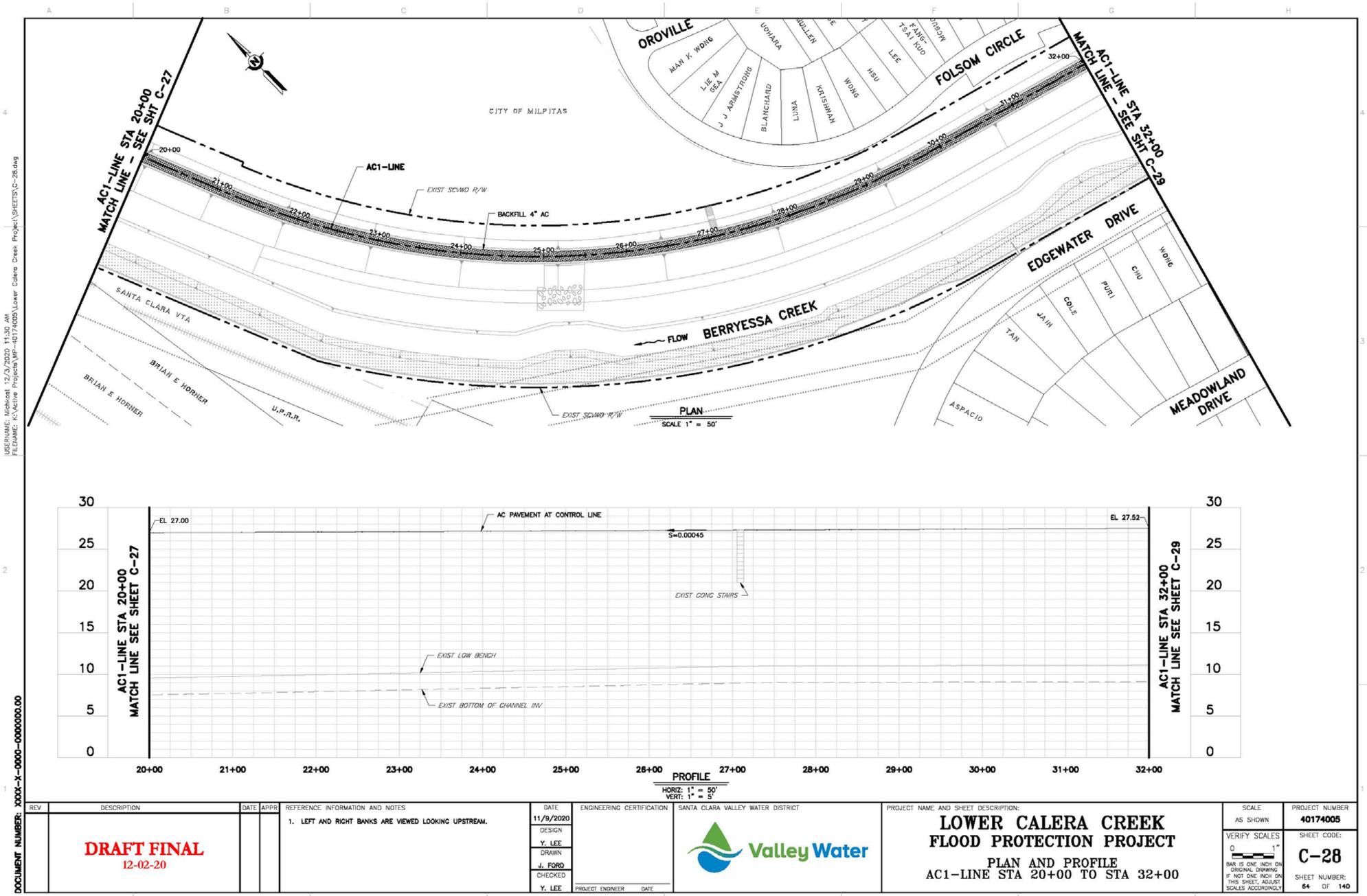

EXHIBIT C
LCC and LPC City Approved Drawings for Improvement Removal and Replacement (continued)

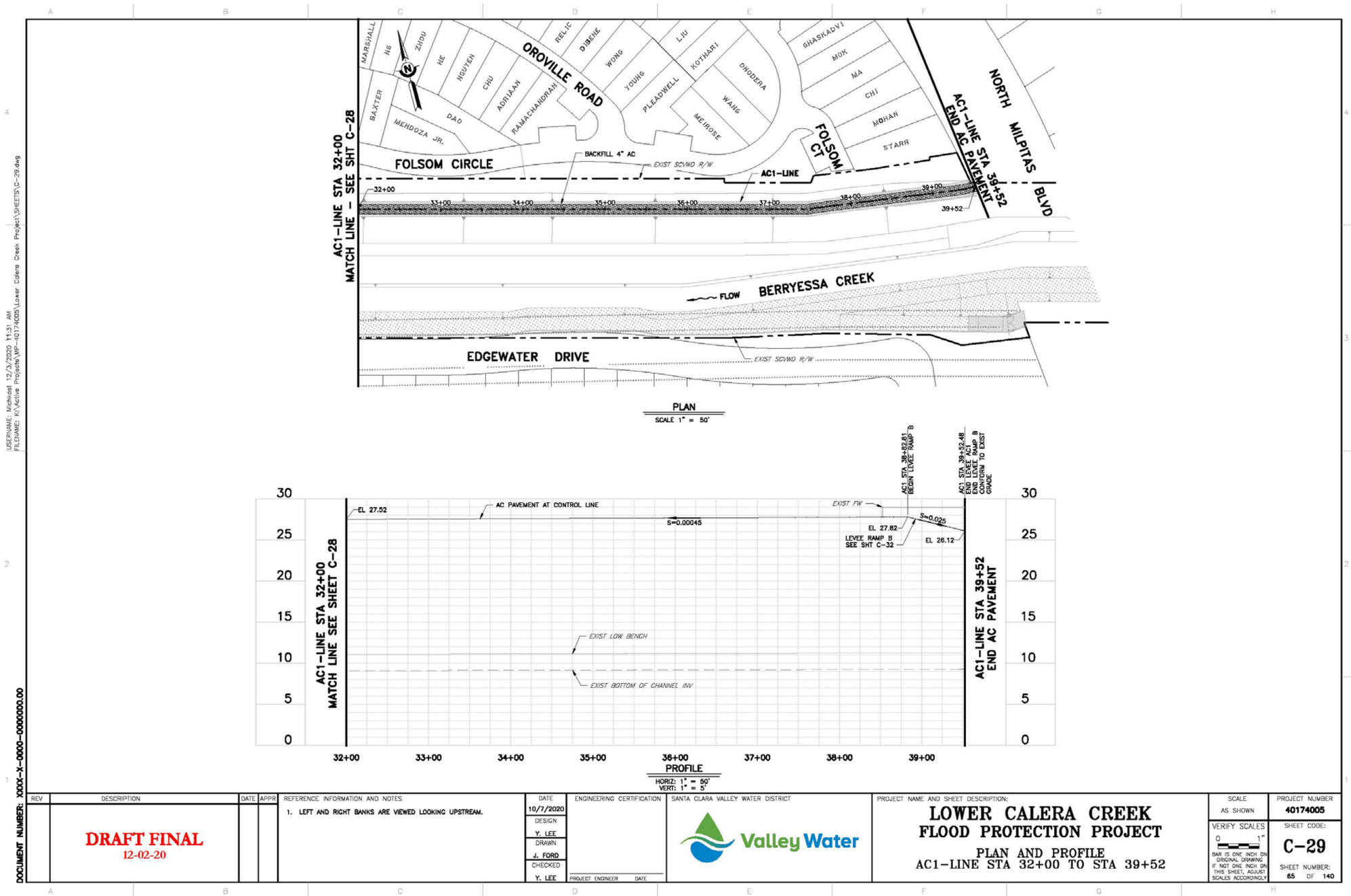

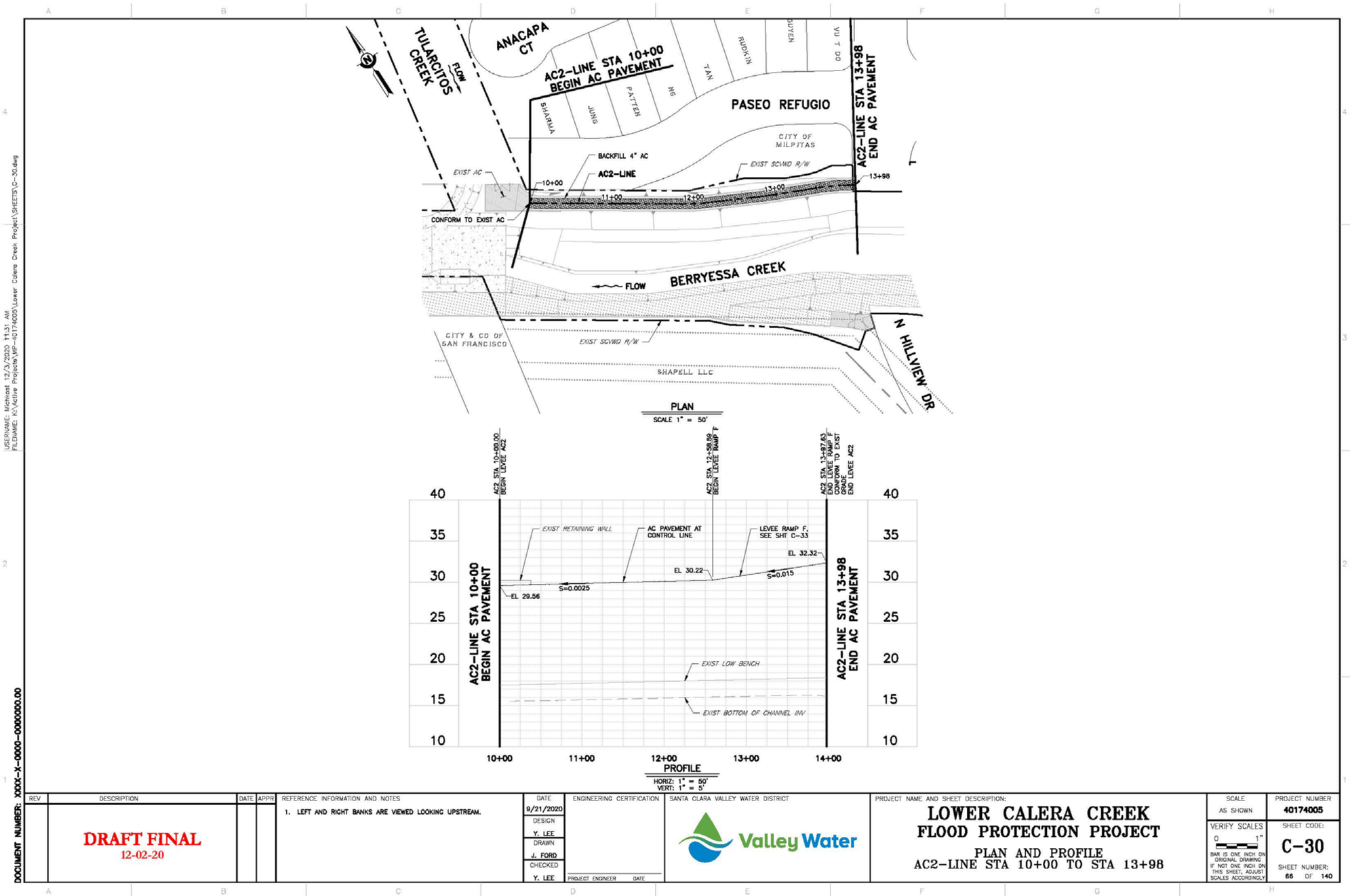
TULARCITOS CREEK
FLOW
ANACAPA CT
AC2-LINE STA 10+00 BEGIN AC PAVEMENT
SHARMA
JUNG
PATTEN
NG
TAN
RUDKIN
DUYEN
VU T DO
PASEO REFUGIO
CITY OF MILPITAS
AC2-LINE STA 13+98 END AC PAVEMENT
BACKFILL 4" AC
AC2-LINE
EXIST AC
EXIST SCVWD R/W
10+00
11+00
12+00
13+00
13+98
CONFORM TO EXIST AC
FLOW
BERRYESSA CREEK
CITY & CO OF SAN FRANCISCO
EXIST SCVWD R/W
SHAPELL LLC
N HILLVIEW DR.
PLAN
SCALE 1" = 50'
AC2 STA 10+00.00 BEGIN LEVEE AC2
AC2 STA 12+58.99 BEGIN LEVEE RAMP F
AC2 STA 13+97.63 END LEVEE RAMP F CONFORM TO EXIST GROUD END LEVEE AC2
EXIST RETAINING WALL
AC PAVEMENT AT CONTROL LINE
LEVEE RAMP F, SEE SHT C-33
EL 32.32
EL 30.22
S=0.015
S=0.0025
EL 29.56
EXIST LOW BENCH
EXIST BOTTOM OF CHANNEL INV
AC2-LINE STA 10+00 BEGIN AC PAVEMENT
AC2-LINE STA 13+98 END AC PAVEMENT
40
35
30
25
20
15
10
10+00
11+00
12+00
13+00
14+00
PROFILE
HORIZ: 1" = 50'
VERT: 1" = 5'
USERNAME: Mchicoat 12/3/2020 11:31 AM
FILENAME: K:\Active Projects\MP-40174005\Lower Calera Creek Project\SHEETS\C-30.dwg
DOCUMENT NUMBER: XXXX-X-0000-0000000.00
REV
DESCRIPTION
DATE
APPR
DRAFT FINAL
12-02-20
REFERENCE INFORMATION AND NOTES
1. LEFT AND RIGHT BANKS ARE VIEWED LOOKING UPSTREAM.
DATE
9/21/2020
DESIGN
Y. LEE
DRAWN
J. FORD
CHECKED
Y. LEE
ENGINEERING CERTIFICATION
PROJECT ENGINEER
DATE
SANTA CLARA VALLEY WATER DISTRICT
Valley Water
PROJECT NAME AND SHEET DESCRIPTION:
LOWER CALERA CREEK
FLOOD PROTECTION PROJECT
PLAN AND PROFILE
AC2-LINE STA 10+00 TO STA 13+98
SCALE
AS SHOWN
VERIFY SCALES
0
1"
BAR IS ONE INCH ON ORIGINAL DRAWING IF NOT ONE INCH ON THIS SHEET, ADJUST SCALES ACCORDINGLY
PROJECT NUMBER
40174005
SHEET CODE:
C-30
SHEET NUMBER:
66 OF 140

EXHIBIT C
LCC and LPC City Approved Drawings for Improvement Removal and Replacement (continued)

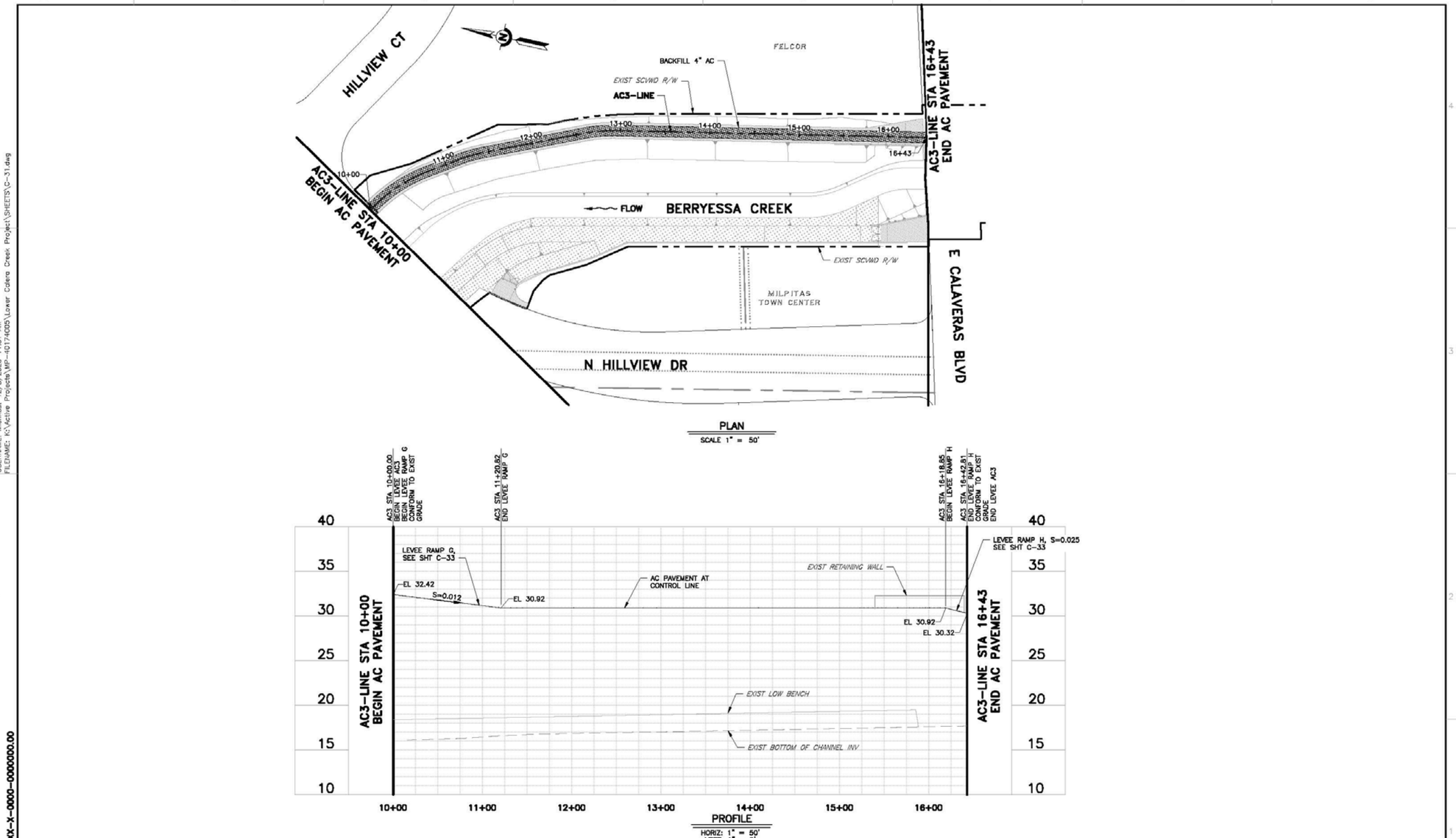

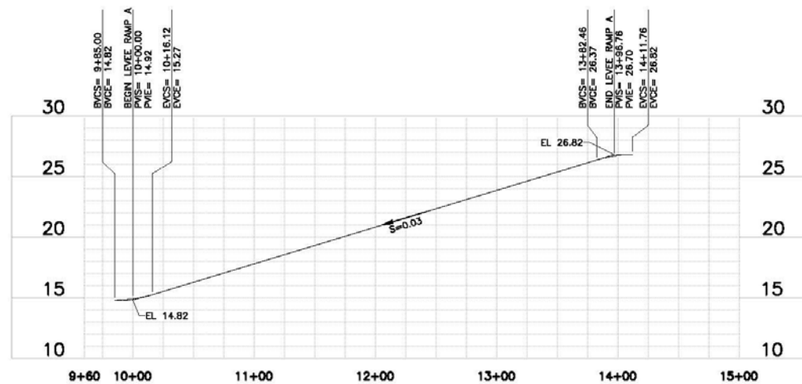

PROFILE – LEVEE RAMP A
HORIZ: 1" = 50'
VERT: 1" = 5'

LEVEE RAMP A PROFILE (LT BANK, ACCESS ROAD)		
STATION (AC1)	EL	NOTE
9+85	14.82	BVC
9+90	14.83	VERTICAL CURVE L=31.12'
9+95	14.87	
10+00	14.92	
10+05.37	15.01	
10+10.75	15.13	
10+16.12	15.27	EVC
10+16.12 TO 13+82.46		S=0.03
13+82.46	26.37	BVC
13+87.23	26.50	VERTICAL CURVE L=29.3'
13+91.99	26.61	
13+96.76	26.70	
14+01.76	26.77	
14+06.76	26.81	
14+11.76	26.82	EVC

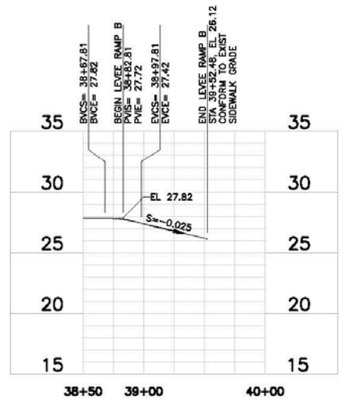

PROFILE – LEVEE RAMP B
HORIZ: 1" = 50'
VERT: 1" = 5'

LEVEE RAMP B PROFILE (LT BANK, N. MILPITAS BLVD, D/S)		
STATION (AC1)	EL	NOTE
38+67.81	27.82	BVC
38+72.81	27.81	VERTICAL CURVE L=30'
38+77.81	27.78	
38+82.81	27.72	
38+87.81	27.64	
38+92.81	27.54	
38+97.81	27.42	EVC
38+97.81 TO 39+52.48		S=-0.025
39+52.48	26.12	END RAMP

USERNAME: Jennford 12/3/2020 11:31 AM
FILENAME: K:\Active Projects\MP-40174005\Lower Calera Creek Project\SHEETS\C-32.dwg

DOCUMENT NUMBER: XXXX-X-0000-0000000.00

REV	DESCRIPTION	DATE	APPR	REFERENCE INFORMATION AND NOTES	DATE 11/9/2020	ENGINEERING CERTIFICATION	SANTA CLARA VALLEY WATER DISTRICT	PROJECT NAME AND SHEET DESCRIPTION:	SCALE AS SHOWN	PROJECT NUMBER 40174005
	DRAFT FINAL 12-02-20				DESIGN Y. LEE		Valley Water	LOWER CALERA CREEK FLOOD PROTECTION PROJECT	VERIFY SCALES 0 1" BAR IS ONE INCH ON ORIGINAL DRAWING IF NOT ONE INCH ON THIS SHEET, ADJUST SCALES ACCORDINGLY	SHEET CODE: C-32
					DRAWN J. FORD			LEVEE RAMP PROFILES AND TABLES		SHEET NUMBER: 68 OF 140
					CHECKED Y. LEE	PROJECT ENGINEER DATE				

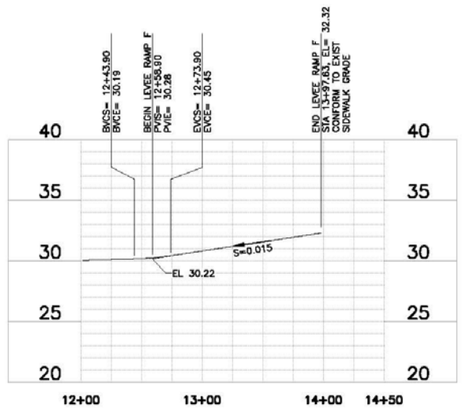

PROFILE – LEVEE RAMP F

HORIZ: 1" = 50'
VERT: 1" = 5'

LEVEE RAMP F PROFILE (LT BANK, N. HILLVIEW DR, D/S)		
STATION (AC2)	EL	NOTE
12+43.90	30.19	BVC
12+48.90	30.21	VERTICAL CURVE L=30'
12+53.90	30.24	
12+58.90	30.28	
12+63.90	30.33	
12+68.90	30.39	
12+73.90	30.45	EVC
12+73.90 TO 13+97.63		S=0.015
13+97.63	32.32	END RAMP

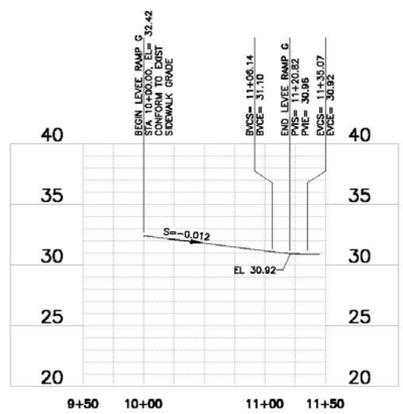

PROFILE – LEVEE RAMP G

HORIZ: 1" = 50'
VERT: 1" = 5'

LEVEE RAMP G PROFILE (LT BANK, N. HILLVIEW DR, U/S)		
STATION (AC3)	EL	NOTE
10+00	32.42	BEGIN RAMP
10+00 TO 11+06.14		S=-0.012
11+06.14	31.10	BVC
11+11.03	31.04	VERTICAL CURVE L=28.93'
11+15.93	31.00	
11+20.82	30.96	
11+25.57	30.94	
11+30.32	30.92	
11+35.07	30.92	EVC

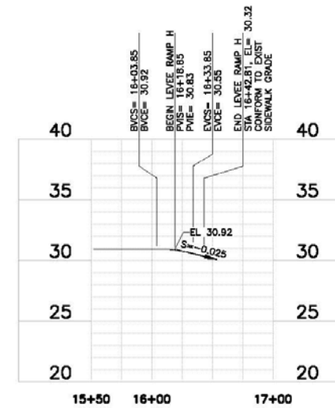

PROFILE – LEVEE RAMP H

HORIZ: 1" = 50'
VERT: 1" = 5'

LEVEE RAMP H PROFILE (LT BANK, E. CALAVERAS BLVD, D/S)		
STATION (AC3)	EL	NOTE
16+03.85	30.92	BVC
16+08.85	30.91	VERTICAL CURVE L=30'
16+13.85	30.88	
16+18.85	30.83	
16+23.85	30.75	
16+28.85	30.66	
16+33.85	30.55	EVC
16+33.85 TO 16+42.81		S=-0.025
16+42.81	30.32	END RAMP

USERNAME: Jennford 12/3/2020 11:32 AM
FILENAME: K:\Active Projects\MP-40174005\Lower Calera Creek Project\SHEETS\C-33.dwg

DOCUMENT NUMBER: XXXX-X-0000-0000000.00

REV	DESCRIPTION	DATE	APPR	REFERENCE INFORMATION AND NOTES
	DRAFT FINAL 12-02-20			

DATE 9/21/2020
DESIGN Y. LEE
DRAWN J. FORD
CHECKED Y. LEE

ENGINEERING CERTIFICATION
PROJECT ENGINEER DATE

SANTA CLARA VALLEY WATER DISTRICT
Valley Water

PROJECT NAME AND SHEET DESCRIPTION:
LOWER CALERA CREEK
FLOOD PROTECTION PROJECT
LEVEE RAMP
PROFILES AND TABLES

SCALE AS SHOWN
VERIFY SCALES 0 1"
BAR IS ONE INCH ON ORIGINAL DRAWING IF NOT ONE INCH ON THIS SHEET, ADJUST SCALES ACCORDINGLY

PROJECT NUMBER 40174005
SHEET CODE: C-33
SHEET NUMBER: 69 OF 140

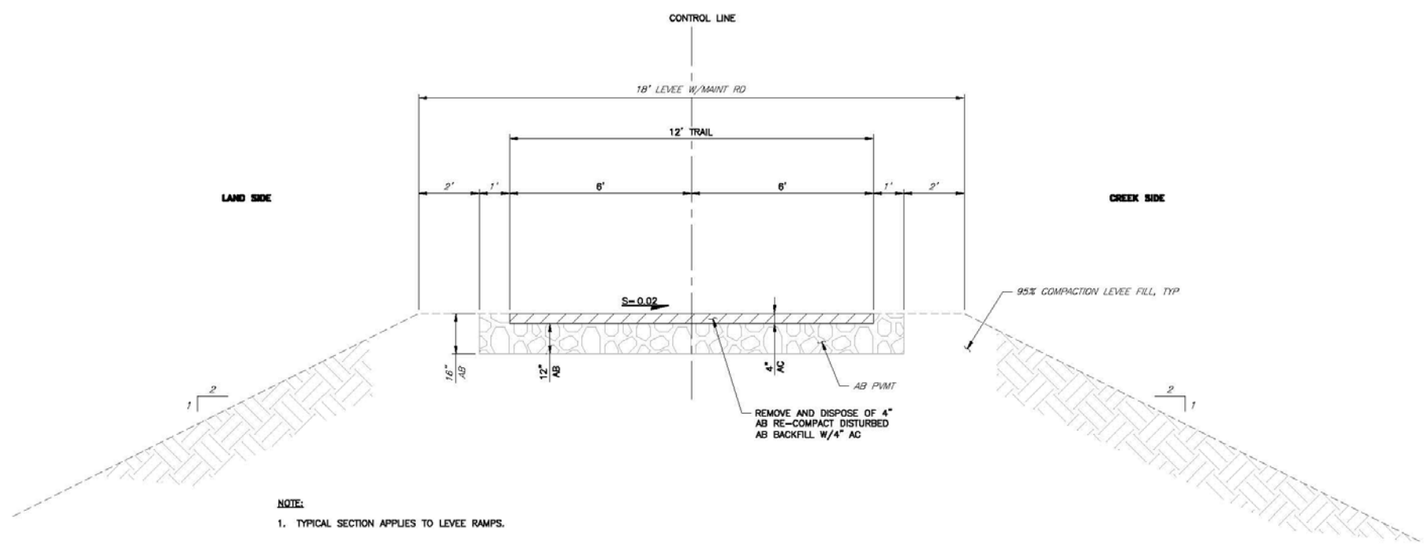

NOTE:

1. TYPICAL SECTION APPLIES TO LEVEE RAMPS.

DETAIL 1 – LT BANK TYPICAL AC REPLACEMENT
(AC1 STA 10+00 TO STA 39+52)
(AC2 STA 10+00 TO STA 13+98)
(AC3 STA 10+00 TO STA 16+43)
SCALE: 1/2" = 1'-0"

DOCUMENT NUMBER: XXXX-X-0000-0000000.00

USERNAME: Jennifer 12/3/2020 11:32 AM
FILENAME: K:\Active Projects\MP-40174005\Lower Calera Creek Project\SHEETS\C-34.dwg

REV	DESCRIPTION	DATE	APPR	REFERENCE INFORMATION AND NOTES	DATE	ENGINEERING CERTIFICATION	SANTA CLARA VALLEY WATER DISTRICT	PROJECT NAME AND SHEET DESCRIPTION:	SCALE	PROJECT NUMBER
	DRAFT FINAL 12-02-20				9/21/2020 DESIGN Y. LEE DRAWN J. FORD CHECKED Y. LEE	PROJECT ENGINEER DATE	Valley Water	LOWER CALERA CREEK FLOOD PROTECTION PROJECT MAINTENANCE ROAD AC PAVING DETAIL	AS SHOWN VERIFY SCALES 0 1" BAR IS ONE INCH ON ORIGINAL DRAWING IF NOT ONE INCH ON THIS SHEET, ADJUST SCALES ACCORDINGLY	40174005 SHEET CODE: C-34 SHEET NUMBER: 70 OF 140

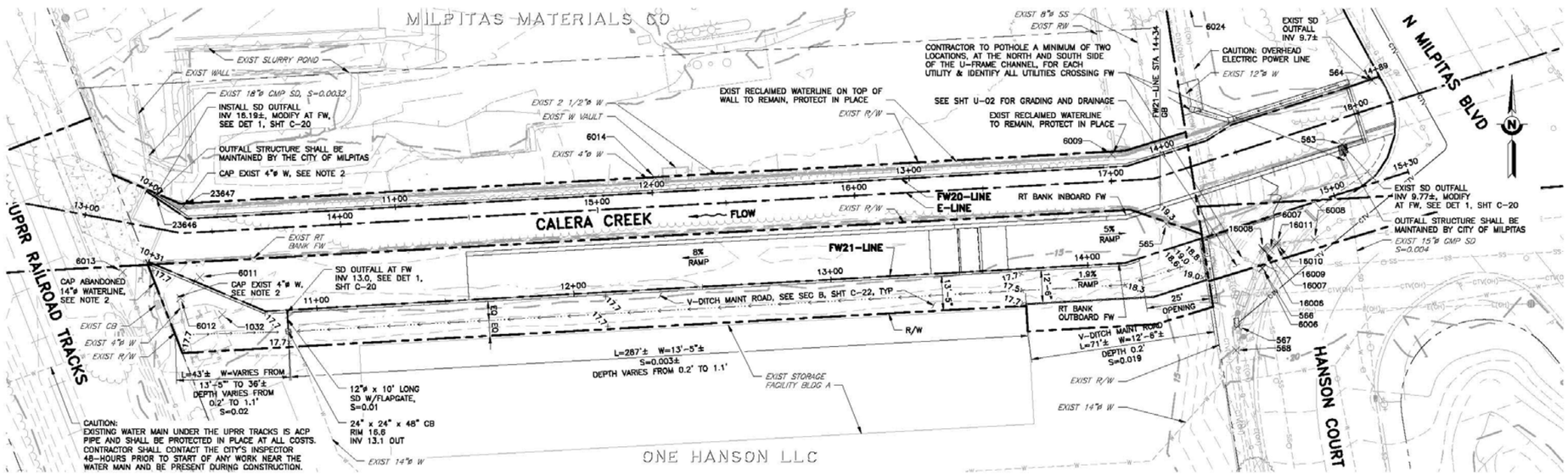

DETAIL (1 / C-01) **UTILITY RELOCATION**
SCALE: 1" = 20'

POINT TABLE

POINT	NORTHING	EASTING	ELEVATION	DESCRIPTION
563	1988007.1390	6152664.0010	INV 9.8	SD CMP
564	1988031.8890	6152675.7950	INV 9.7	SD RCP
565	1987976.2940	6152595.6220	8.2	8" SS
566	1987958.9530	6152633.0690	6.6	8" SS
567	1987936.4970	6152623.6480	6.8	12" W
568	1987927.0970	6152622.9210	7.3	12" W
1032	1987940.9260	6152228.9200	13.8	REBAR & PLUG SET BY EXARO
6006	1987959.0620	6152633.1140	21.1	SSMH
6007	1987965.9320	6152636.2360	16.2	E
6008	1987970.1640	6152653.4100	18.5	4" PG&E GAS
6009	1988003.2550	6152574.5320	12.0	4" W
6011	1987955.4990	6152220.3280	7.2	4" W
6012	1987947.3400	6152212.7310	10.0	4" W
6013	1987957.3930	6152190.2670	7.8	8" G (CHEVRON)
6014	1987993.9780	6152397.2950	13.0	4" W
6024	1988164.8620	6152572.6810	16.5	12" WV
16006	1987965.6570	6152633.8260	16.6	4" E
16007	1987966.1560	6152633.4700	16.8	4" FO
16008	1987966.6950	6152633.1750	17.0	2" G
16009	1987967.9070	6152638.2060	17.5	4" E
16010	1987968.5520	6152638.6190	17.5	4" FO
16011	1987968.9760	6152638.8900	17.6	2" G
23646	1987987.2250	6152203.0550	16.2	SD CMP
23647	1987983.1509	6152213.8212		4" W TIE IN

NOTE:
EXCEPT WHERE SHOWN AS INV, ALL ELEVATIONS ARE TO TOP OF PIPE.

NOTES:
1. CITY OF MILPITAS AND MILPITAS MATERIALS COMPANY SHALL BE NOTIFIED 72 HOURS IN ADVANCE OF WATERLINE WORK.
2. CONTRACTOR SHALL POTHOLE TO CONFIRM TIE-IN LOCATIONS, SIZE OF EXISTING PIPE, AND EXISTING PIPE MATERIAL IN ADVANCE OF UTILITY LINE WORK.

CAUTION:
CAUTION SHOULD BE TAKEN WHILE WORKING ON U-FRAME CHANNEL. UTILITY LINE CROSSINGS UNDER U-FRAME CHANNEL.

USERNAME: Jennford 12/3/2020 12:45 PM
FILENAME: K:\Active Projects\MP-40174005\Lower Calera Creek Project\SHEETS\U-01.dwg

DOCUMENT NUMBER: XXXX-X-0000-0000000.00

REV	DESCRIPTION	DATE	APPR	REFERENCE INFORMATION AND NOTES
	DRAFT FINAL 12-02-20			

DATE 11/18/2020
DESIGN Y. LEE
DRAWN R. STILL
CHECKED Y. LEE

ENGINEERING CERTIFICATION
PROJECT ENGINEER DATE

SANTA CLARA VALLEY WATER DISTRICT
Valley Water

PROJECT NAME AND SHEET DESCRIPTION:
LOWER CALERA CREEK FLOOD PROTECTION PROJECT
UPRR TO NORTH MILPITAS BOULEVARD GRADING AND DRAINAGE

SCALE: AS SHOWN
VERIFY SCALES: 0 — 1"
BAR IS ONE INCH ON ORIGINAL DRAWING IF NOT ONE INCH ON THIS SHEET, ADJUST SCALES ACCORDINGLY

PROJECT NUMBER: 40174005
SHEET CODE: U-01
SHEET NUMBER: 71 OF 140

EXHIBIT C
LCC and LPC City Approved Drawings for Improvement Removal and Replacement (continued)

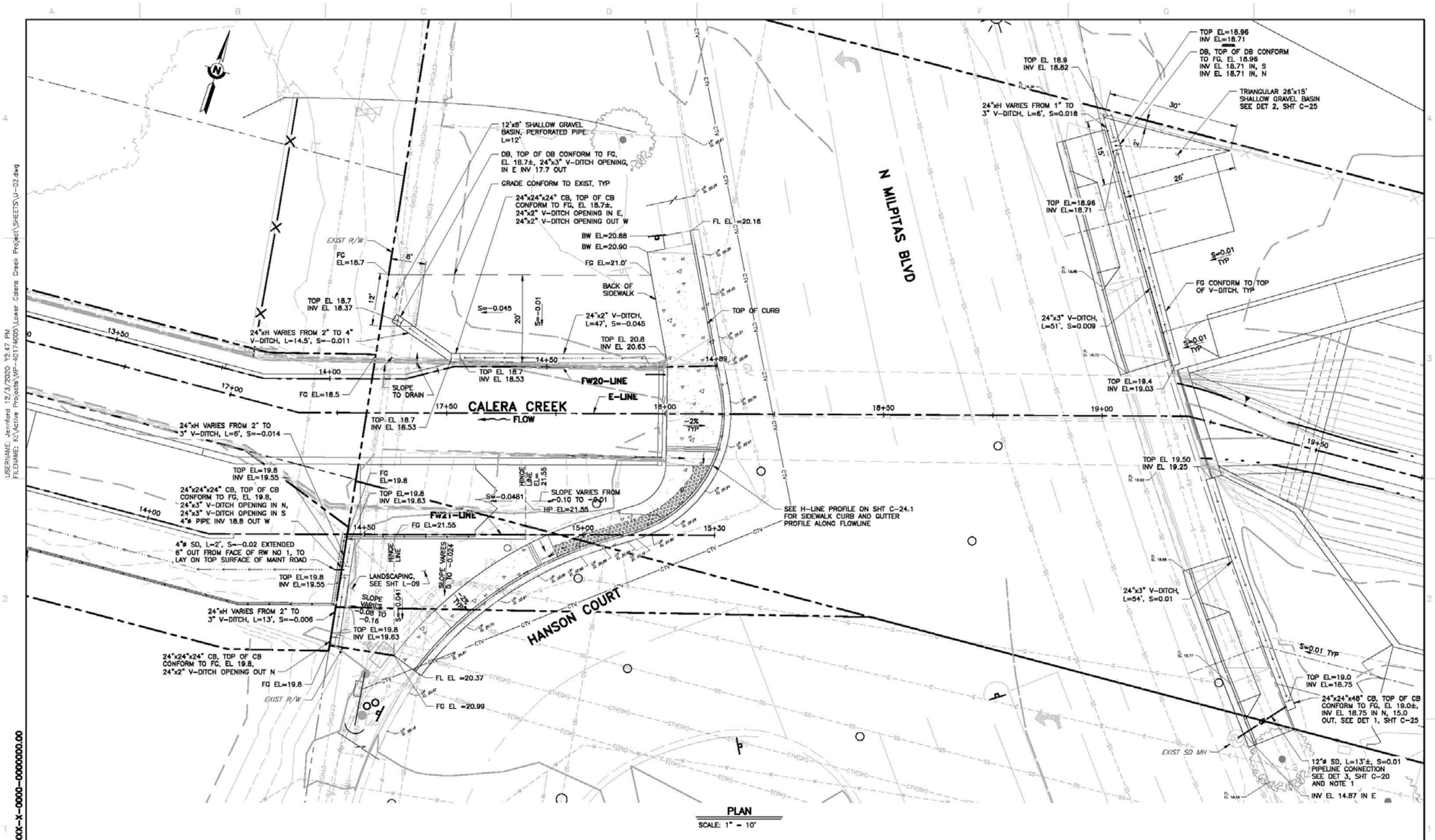

REV	DESCRIPTION	DATE	APPR
	DRAFT FINAL 12-02-20		

REFERENCE INFORMATION AND NOTES
1. CONTRACTOR SHALL COORDINATE WITH CITY OF MILPITAS TO MAKE FIELD ADJUSTMENTS AS NEEDED BASED ON THE PIPE MATERIAL AND THE ALIGNMENT OF MANHOLE.

DATE 11/12/2020 | DESIGN Y. LEE | DRAWN P. KEY | CHECKED Y. LEE

ENGINEERING CERTIFICATION — PROJECT ENGINEER — DATE

SANTA CLARA VALLEY WATER DISTRICT — Valley Water

PROJECT NAME AND SHEET DESCRIPTION:
LOWER CALERA CREEK
FLOOD PROTECTION PROJECT
NORTH MILPITAS BOULEVARD
GRADING AND DRAINAGE

SCALE: AS SHOWN — VERIFY SCALES: 0 1" BAR IS ONE INCH ON ORIGINAL DRAWING IF NOT ONE INCH ON THIS SHEET, ADJUST SCALES ACCORDINGLY

PROJECT NUMBER 40174005 — SHEET CODE: U-02 — SHEET NUMBER: 72 OF 140

DOCUMENT NUMBER: XXXX-X-0000-0000000.00

USERNAME: Jennford 12/3/2020 12:47 PM
FILENAME: K:\Active Projects\WP-40174005\Lower Calera Creek Project\SHEETS\U-02.dwg

EXHIBIT C
LCC and LPC City Approved Drawings for Improvement Removal and Replacement (continued)

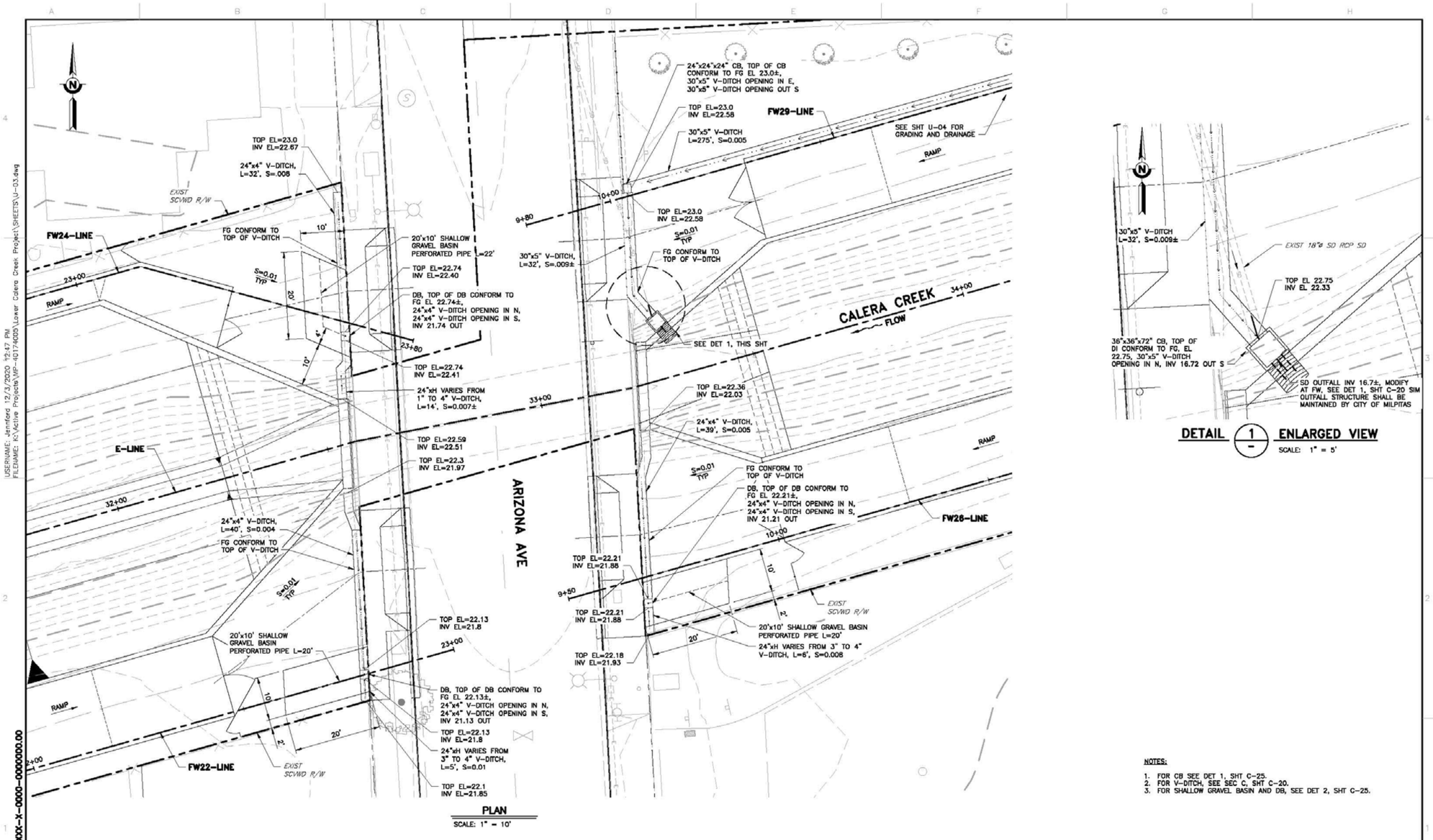

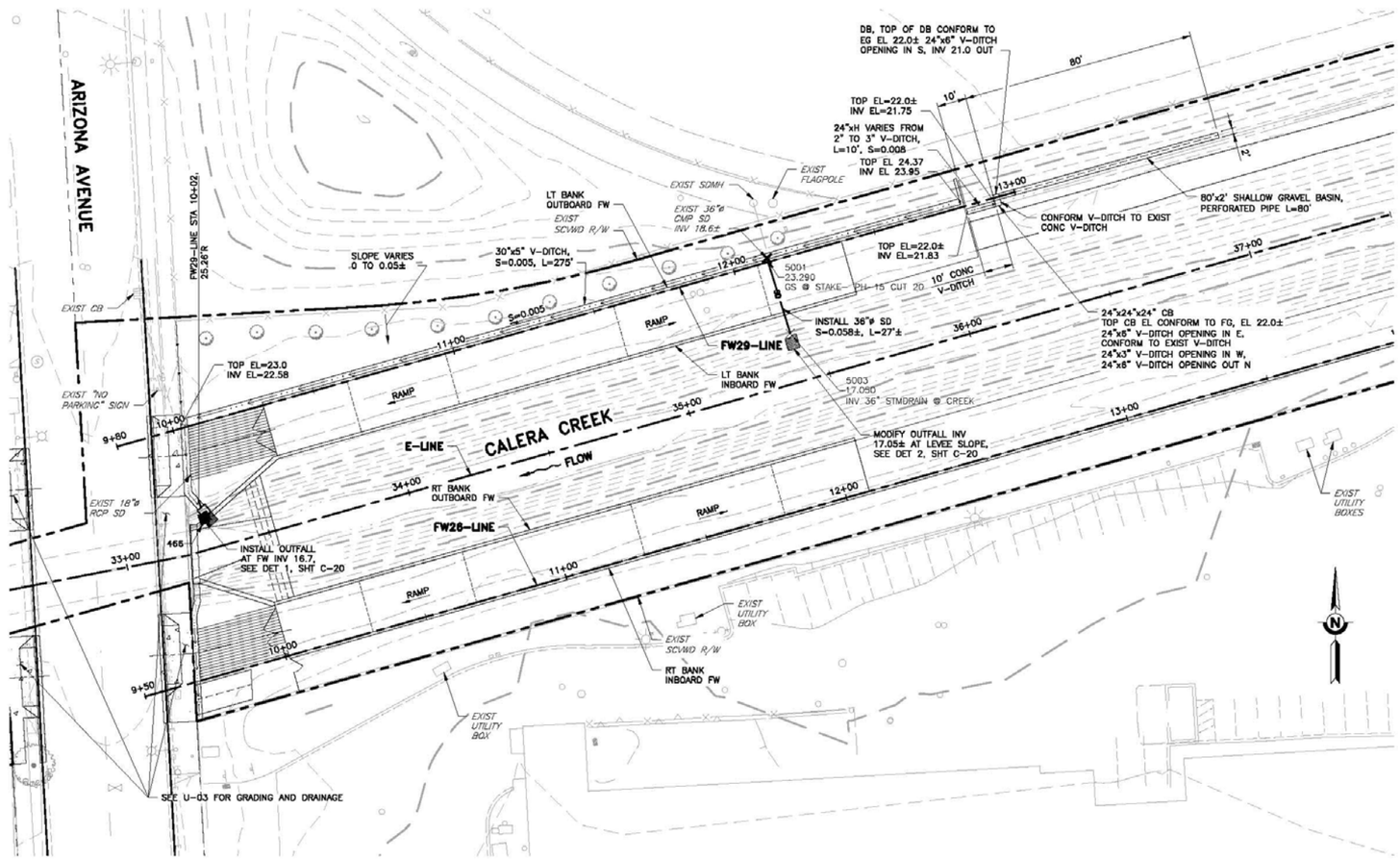

NOTES:

1. FOR V-DITCH, SEE SEC C, SHT C-20.
2. FOR SHALLOW GRAVEL BASIN AND DB, SEE DET 2, SHT C-25.

DETAIL 1 C-08 C-17 UTILITY RELOCATION
SCALE: 1" = 20'

POINT TABLE

POINT	NORTHING	EASTING	DESCRIPTION
466	1988634.9070	6153992.1240	CMP
5001	1988724.7500	6154184.9600	GS @ STAKE-- PH-15 CUT 20
5003	1988699.0000	6154193.0000	INV 36" STMDRAIN @ CREEK

REV	DESCRIPTION	DATE	APPR	REFERENCE INFORMATION AND NOTES
	DRAFT FINAL 12-02-20			

DATE 11/12/2020
DESIGN Y. LEE
DRAWN R. STILL
CHECKED Y. LEE

ENGINEERING CERTIFICATION
PROJECT ENGINEER DATE

SANTA CLARA VALLEY WATER DISTRICT
Valley Water

PROJECT NAME AND SHEET DESCRIPTION:
LOWER CALERA CREEK
FLOOD PROTECTION PROJECT
ARIZONA AVENUE UPSTREAM
GRADING AND DRAINAGE

SCALE AS SHOWN
VERIFY SCALES 0 1"
BAR IS ONE INCH ON ORIGINAL DRAWING IF NOT ONE INCH ON THIS SHEET, ADJUST SCALES ACCORDINGLY

PROJECT NUMBER 40174005
SHEET CODE: U-04
SHEET NUMBER: 74 OF 140

USERNAME: Jennford 12/3/2020 12:47 PM
FILENAME: K:\Active Projects\MP-40174005\Lower Calera Creek Project\SHEETS\U-04.dwg
DOCUMENT NUMBER: XXXX-X-0000-0000000.00

TREE TABLE						
TREE #	STA	TRUNK CIRCUMFERENCE (INCHES)	DBH (INCHES)	SPECIES	COMMON NAME	NOTE
1078	04+90	21,19,19 16,14,12,11	32	ULMUS SP.	ELM	REMOVE
1079	07+80	13	4	ACER SP.	MAPLE	REMOVE
1080	10+40	21,10,10	13	--	UNIDENTIFIED	REMOVE
1081	10+40	21,16,16	17	MYOPORUM LAETUM	MYOPORUM	REMOVE

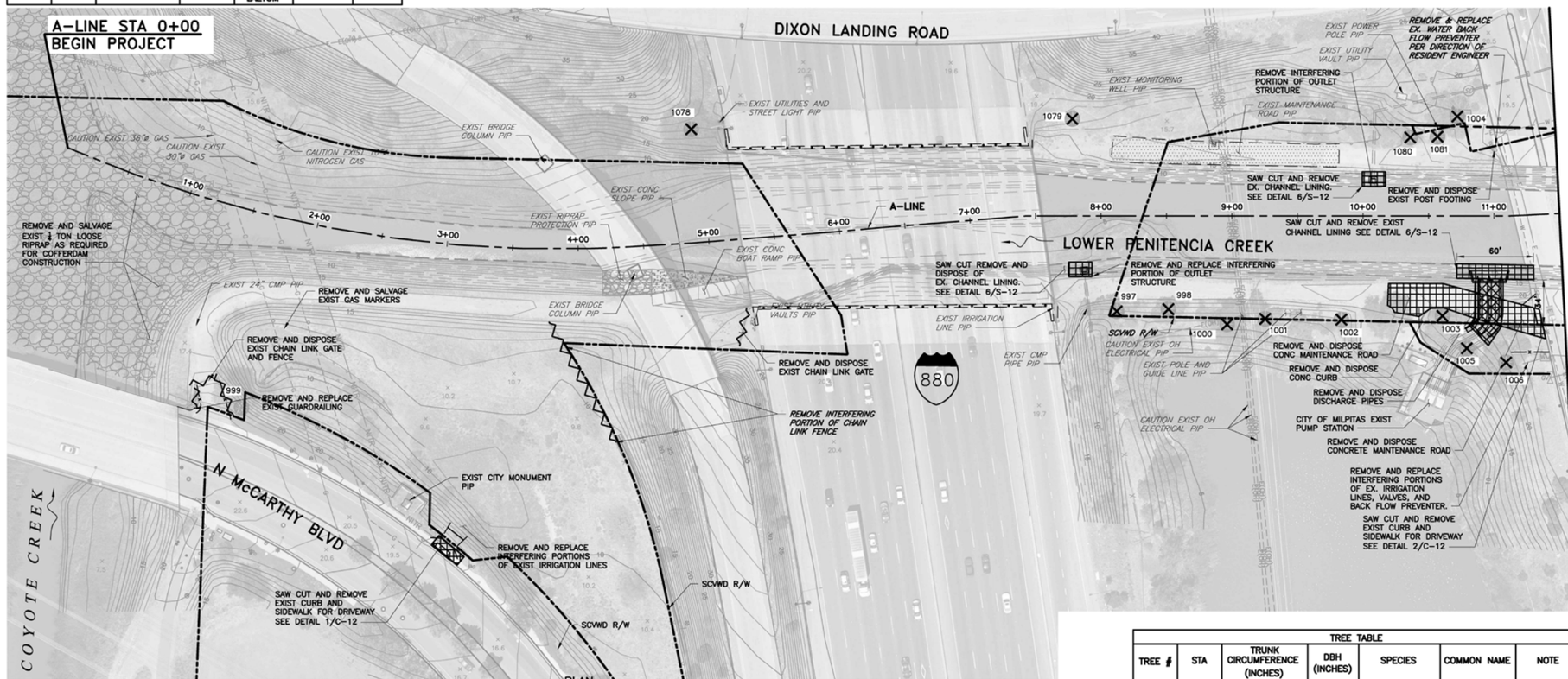

PLAN
SCALE 1" = 40'

TREE TABLE						
TREE #	STA	TRUNK CIRCUMFERENCE (INCHES)	DBH (INCHES)	SPECIES	COMMON NAME	NOTE
997	8+10	–	–	UNKNOWN	UNKNOWN	REMOVE
998	8+50	–	–	UNKNOWN	UNKNOWN	REMOVE
999	1+50	–	–	UNKNOWN	UNKNOWN	PROTECT
1000	08+90	40	13	EUCALYPTUS SP.	EUCALYPTUS	REMOVE
1001	09+40	39	12	EUCALYPTUS SP.	EUCALYPTUS	REMOVE
1002	09+90	45	14	EUCALYPTUS SP.	EUCALYPTUS	REMOVE
1003	10+60	40	13	SCHINUS MOLLE	CALIFORNIA PEPPER TREE	REMOVE
1004	10+70	85	27	FRAXINUS SP.	ASH	REMOVE
1005	10+80	30	10	EUCALYPTUS SP.	EUCALYPTUS	REMOVE – DEAD
1006	11+10	60	19	EUCALYPTUS SP.	EUCALYPTUS	REMOVE

DEMOLITION NOTES

1. ALL UTILITIES NOT NOTED TO BE REMOVED, RELOCATED OR ABANDONED SHALL BE PROTECTED IN PLACE.
2. ALL UTILITY RELOCATIONS ARE THE RESPONSIBILITY OF THE CONTRACTOR.
3. ALL TREES NOT CALLED OUT FOR REMOVAL SHALL BE PROTECTED IN PLACE.
4. SOME TREES NOT SHOWN FOR REMOVAL WILL REQUIRE TRIMMING TO ACCOMMODATE SHEET PILE WALL CONSTRUCTION.
5. TREE REMOVAL PERMIT IS REQUIRED FROM THE CITY FOR ANY TREE REMOVAL WITHIN CITY RIGHT-OF-WAY. THIS PERMIT MUST BE OBTAINED PRIOR TO ISSUANCE OF CITY ENCROACHMENT PERMIT.
6. REFER TO CITY STD DWG 734 WHEN REPLACING BACKFLOW PREVENTERS.

LEGEND

- EXIST MAINTENANCE ROAD (PIP)
- TREE/BRUSH REMOVAL
- REMOVE EXIST FENCE
- TREE/BUSH PROTECTION IN PLACE
- REMOVE AND DISPOSE OF EXIST AC ROADWAY
- REMOVE AND DISPOSE OF EXIST CONCRETE
- REMOVE AND DISPOSE OF EXIST ARTICULATED BLOCKS
- REMOVE AND DISPOSE OF EXIST DISCHARGE PIPES

DOCUMENT NUMBER: XXXX-X-0000-0000000.00

USERNAME: ERIC.OLEA 11/20/2020 12:31 PM
FILENAME: P:\Wat\T35945 Lower Penitencia Creek\04 Design\Sheets\D-01.dwg

REV	DESCRIPTION	DATE	APPR.
	FINAL 11/20/2020		

REFERENCE INFORMATION AND NOTES
1. AERIAL PHOTOGRAPHY WAS TAKEN SEPTEMBER 15, 2019

TETRA TECH
17885 VON KARMAN AVE., SUITE 500
IRVINE, CA 92614

DATE 5/23/2019
DESIGN AWG
DRAWN AWG
CHECKED YHC

ENGINEERING CERTIFICATION
REGISTERED PROFESSIONAL ENGINEER ERIC TORRESON NO. 66068 EXP. 6-30-20 CIVIL STATE OF CALIFORNIA
PROJECT ENGINEER DATE

SANTA CLARA VALLEY WATER DISTRICT
Valley Water
PROJECT ENGINEER ACCEPTED BY DISTRICT DATE

PROJECT NAME AND SHEET DESCRIPTION:
LOWER PENITENCIA CREEK IMPROVEMENTS PROJECT
DEMOLITION PLAN
A-LINE STA 0+00 TO STA 11+50

SCALE: AS SHOWN
VERIFY SCALES: 0 1" BAR IS ONE INCH ON ORIGINAL DRAWING IF NOT ONE INCH ON THIS SHEET, ADJUST SCALES ACCORDINGLY
PROJECT NUMBER: 40334005
SHEET CODE: D-01
SHEET NUMBER: 17 OF 90

EXHIBIT C
LCC and LPC City Approved Drawings for Improvement Removal and Replacement (continued)

TREE TABLE						
TREE #	STA	TRUNK CIRCUMFERENCE (INCHES)	DBH (INCHES)	SPECIES	COMMON NAME	NOTE
1007	11+90	40	13	ACACIA MELANOXYLON	BLACKWOOD ACACIA	REMOVE
1010	13+00	38.5	12	SEQUIOA SEMPERVIRENS	REDWOOD	PROTECT
1011	13+40	46	15	SEQUIOA SEMPERVIRENS	REDWOOD	PROTECT
1012	13+40	12	4	MYOPORUM LAETUM	MYOPORUM	REMOVE
1013	13+60	40	13	EUCALYPTUS SP.	EUCALYPTUS	PROTECT
1014	13+80	62	20	SEQUIOA SEMPERVIRENS	REDWOOD	REMOVE
1015	13+75	24	8	MYOPORUM LAETUM	MYOPORUM	REMOVE
1016	14+00	20	6	MYOPORUM LAETUM	MYOPORUM	REMOVE
1017	18+20	13	4	--	UNIDENTIFIED SHRUB	REMOVE
1018	18+40	13	4	--	UNIDENTIFIED SHRUB	REMOVE
2000–2005	--	--	--	--	--	PROTECT
2006	21+20	36	--	POPULUS FREMONTII	FREMONT COTTONWOOD	PROTECT

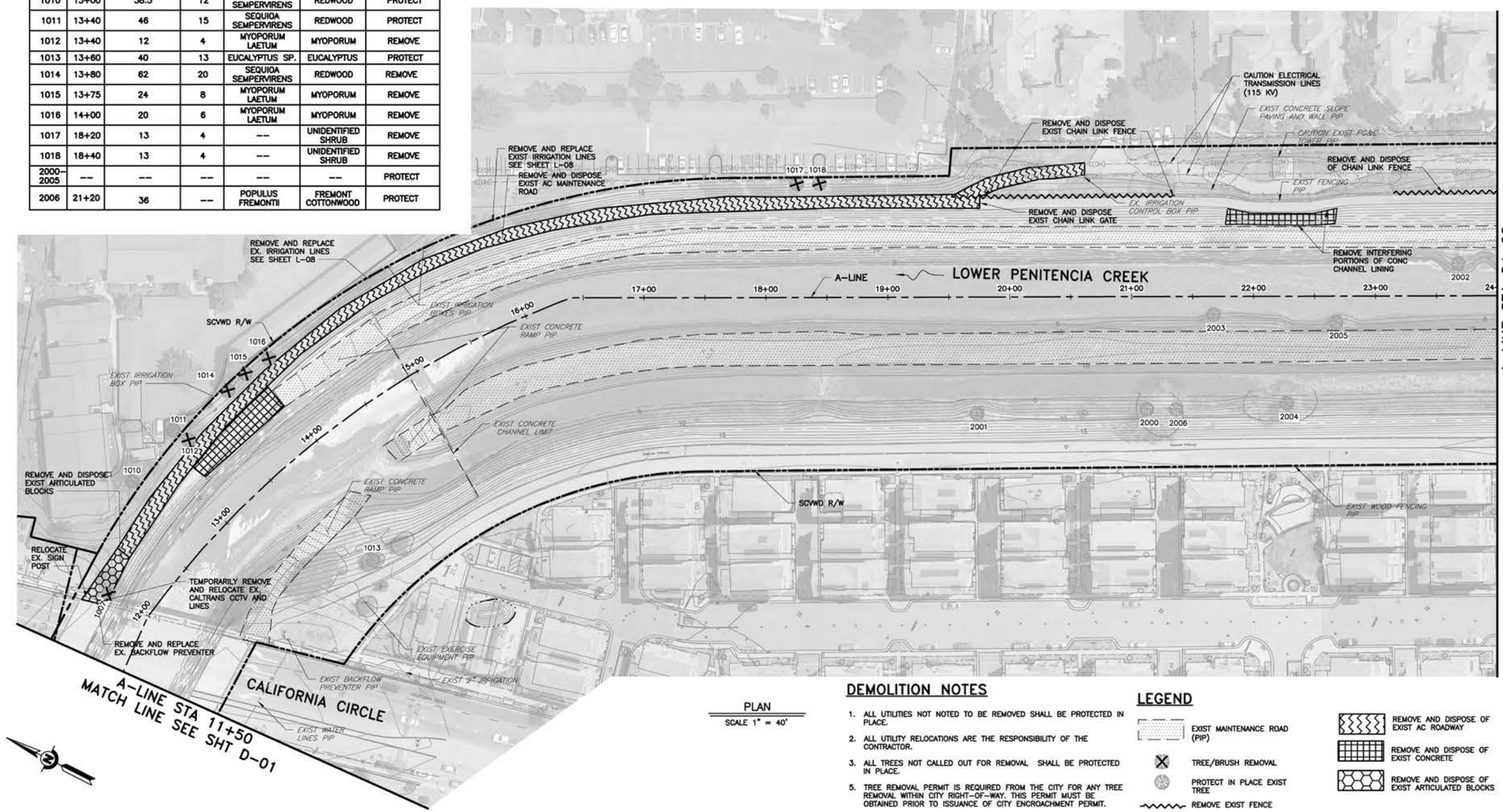

PLAN
SCALE 1" = 40'

DEMOLITION NOTES

1. ALL UTILITIES NOT NOTED TO BE REMOVED SHALL BE PROTECTED IN PLACE.
2. ALL UTILITY RELOCATIONS ARE THE RESPONSIBILITY OF THE CONTRACTOR.
3. ALL TREES NOT CALLED OUT FOR REMOVAL SHALL BE PROTECTED IN PLACE.
5. TREE REMOVAL PERMIT IS REQUIRED FROM THE CITY FOR ANY TREE REMOVAL WITHIN CITY RIGHT-OF-WAY. THIS PERMIT MUST BE OBTAINED PRIOR TO ISSUANCE OF CITY ENCROACHMENT PERMIT.
6. REFER TO CITY STD DWG 734 WHEN REPLACING BACKFLOW PREVENTERS.

LEGEND

- EXIST MAINTENANCE ROAD (PIP)
- TREE/BRUSH REMOVAL
- PROTECT IN PLACE EXIST TREE
- REMOVE EXIST FENCE
- REMOVE AND DISPOSE OF EXIST AC ROADWAY
- REMOVE AND DISPOSE OF EXIST CONCRETE
- REMOVE AND DISPOSE OF EXIST ARTICULATED BLOCKS

USERNAME: Andy.gong 11/20/2020 12:33 PM
FILENAME: P:\Wot\T35945 Lower Penitencia Creek\04 Design\Sheets\D-02.dwg

DOCUMENT NUMBER: XXXX-X-0000-0000000.00

REV	DESCRIPTION	DATE	APPR.
	FINAL 11/20/2020		

REFERENCE INFORMATION AND NOTES
1. AERIAL PHOTOGRAPHY WAS TAKEN AUGUST 15, 2019

TETRA TECH
17885 VON KARMAN AVE., SUITE 500
IRVINE, CA 92614

DATE 5/23/2019
DESIGN AWG
DRAWN AWG
CHECKED YHC

ENGINEERING CERTIFICATION
REGISTERED PROFESSIONAL ENGINEER ERIC TORRESON NO. 66068 EXP. 6-30-20 CIVIL STATE OF CALIFORNIA
PROJECT ENGINEER DATE

SANTA CLARA VALLEY WATER DISTRICT
Valley Water
PROJECT ENGINEER ACCEPTED BY DISTRICT DATE

PROJECT NAME AND SHEET DESCRIPTION:
LOWER PENITENCIA CREEK IMPROVEMENTS PROJECT
DEMOLITION PLAN
A-LINE STA 11+50 TO STA 24+00

SCALE: AS SHOWN
VERIFY SCALES: 0 1" BAR IS ONE INCH ON ORIGINAL DRAWING IF NOT ONE INCH ON THIS SHEET, ADJUST SCALES ACCORDINGLY
PROJECT NUMBER: 40334005
SHEET CODE: D-02
SHEET NUMBER: 18 OF 90

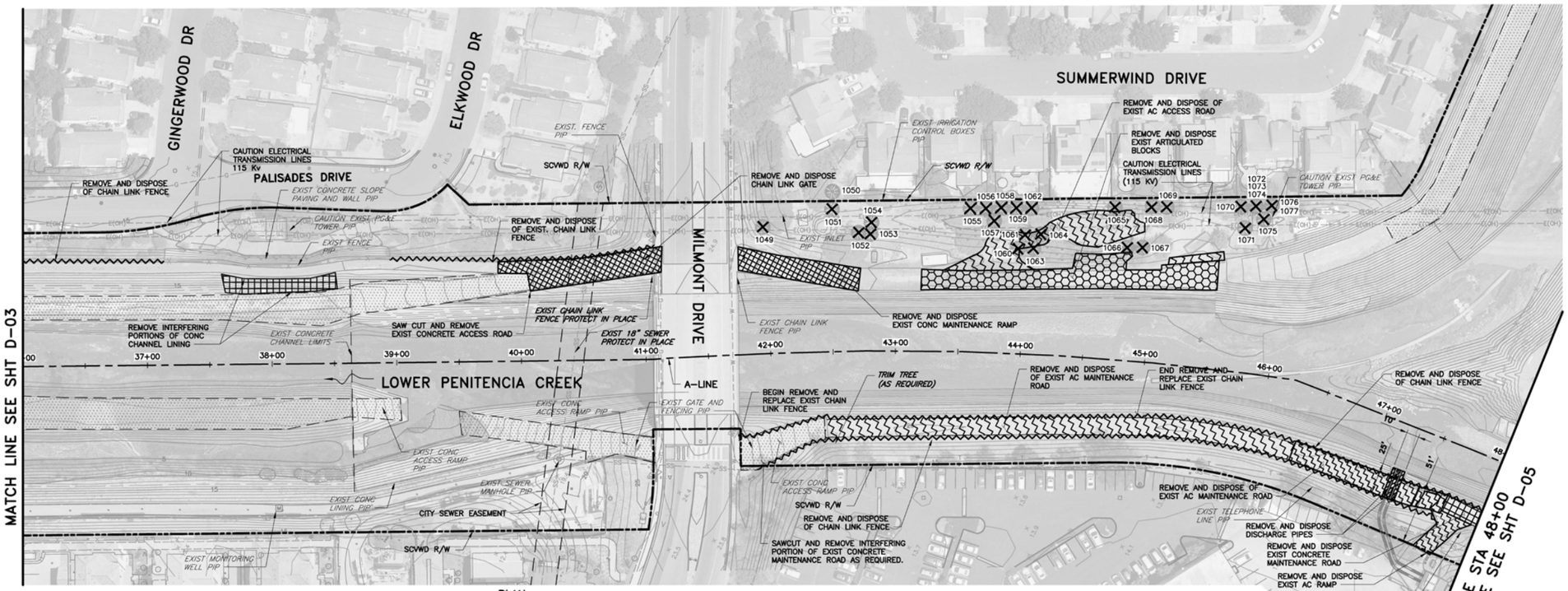

PLAN
SCALE 1" = 40'

USERNAME: Andy.gong 11/20/2020 12:38 PM
FILENAME: P:\Wat\T35945 Lower Penitencia Creek\04 Design\Sheets\D-04.dwg

TREE TABLE						
TREE #	STA	TRUNK CIRCUMFERENCE (INCHES)	DBH (INCHES)	SPECIES	COMMON NAME	NOTE
1049	41+85	24	8	MYOPORUM LAETUM	MYOPORUM	REMOVE
1050	42+30	50	16	SEQUOIA SEMPERVIRENS	COAST REDWOOD	PROTECT
1051	42+30	6	2	RHUS LANCEA	AFRICAN SUMAC	REMOVE
1052	42+50	15	5	MYOPORUM LAETUM	MYOPORUM	REMOVE
1053	42+60	19	6	MYOPORUM LAETUM	MYOPORUM	REMOVE
1054	42+62	14	4	CUPRESSUS SP.	CYPRESS	REMOVE
1055	43+45	21	7	MYOPORUM LAETUM	MYOPORUM	REMOVE
1056	43+55	21	7	MYOPORUM LAETUM	MYOPORUM	REMOVE
1057	43+65	15	5	MYOPORUM LAETUM	MYOPORUM	REMOVE
1058	43+70	15	5	MYOPORUM LAETUM	MYOPORUM	REMOVE
1059	43+87	15	5	MYOPORUM LAETUM	MYOPORUM	REMOVE
1060	43+90	16	5	JUNIPERUS SP.	JUNIPER	REMOVE – STUMP
1061	43+97	13	4	MYOPORUM LAETUM	MYOPORUM	REMOVE
1062	44+03	21	7	MYOPORUM LAETUM	MYOPORUM	REMOVE

TREE TABLE						
TREE #	STA	TRUNK CIRCUMFERENCE (INCHES)	DBH (INCHES)	SPECIES	COMMON NAME	NOTE
1063	44+05	13	4	MYOPORUM LAETUM	MYOPORUM	REMOVE
1064	44+07	13	4	MYOPORUM LAETUM	MYOPORUM	REMOVE
1065	44+60	16	5	MYOPORUM LAETUM	MYOPORUM	REMOVE
1066	44+80	5	2	--	UNIDENTIFIED SHRUB	REMOVE
1067	44+85	5	2	--	UNIDENTIFIED SHRUB	REMOVE
1068	44+90	20	6	MYOPORUM LAETUM	MYOPORUM	REMOVE
1069	45+00	10	3	PRUNUS SP.	PRUNUS SHRUB	REMOVE
1070	45+40	6	2	SALIX SP.	WILLOW	REMOVE
1071	45+46	20	6	JUNIPERUS SP.	JUNIPER	REMOVE
1072	45+50	29	9	WASHINGTONIA ROBUSTA	MEXICAN FAN PALM	REMOVE
1073	45+51	29	9	WASHINGTONIA ROBUSTA	MEXICAN FAN PALM	REMOVE
1074	45+53	29	9	WASHINGTONIA ROBUSTA	MEXICAN FAN PALM	REMOVE
1075	45+55	10	3	RHUS SP.	SUMAC	REMOVE
1076	45+65	10	3	--	UNIDENTIFIED SHRUB	REMOVE
1077	45+70	10	3	--	UNIDENTIFIED SHRUB	REMOVE

DEMOLITION NOTES

1. ALL UTILITIES NOT NOTED TO BE REMOVED SHALL BE PROTECTED IN PLACE.
2. ALL UTILITY RELOCATIONS ARE THE RESPONSIBILITY OF THE CONTRACTOR.
3. ALL TREES NOT CALLED OUT FOR REMOVAL SHALL BE PROTECTED IN PLACE.
5. TREE REMOVAL PERMIT IS REQUIRED FROM THE CITY FOR ANY TREE REMOVAL WITHIN CITY RIGHT-OF-WAY. THIS PERMIT MUST BE OBTAINED PRIOR TO ISSUANCE OF CITY ENCROACHMENT PERMIT.
6. REFER TO CITY STD DWG 734 WHEN REPLACING BACKFLOW PREVENTERS.

LEGEND

- EXIST MAINTENANCE ROAD (PIP)
- TREE/BRUSH REMOVAL
- REMOVE EXIST FENCE
- TREE/BUSH PROTECT IN PLACE
- REMOVE AND DISPOSE OF EXIST AC ROADWAY
- REMOVE AND DISPOSE OF EXIST CONCRETE
- REMOVE AND DISPOSE OF EXIST ARTICULATED BLOCKS
- REMOVE AND DISPOSE OF EXIST DISCHARGE PIPES

DOCUMENT NUMBER: XXXX-X-0000-0000000.00

REV	DESCRIPTION	DATE	APPR.
	FINAL 11/20/2020		

REFERENCE INFORMATION AND NOTES
1. AERIAL PHOTOGRAPHY WAS TAKEN AUGUST 15, 2019

TETRA TECH
17885 VON KARMAN AVE., SUITE 500
IRVINE, CA 92614

DATE 5/23/2019
DESIGN AWG
DRAWN AWG
CHECKED YHC

ENGINEERING CERTIFICATION
REGISTERED PROFESSIONAL ENGINEER ERIC TORRESON NO. 66068 EXP. 6-30-20 CIVIL STATE OF CALIFORNIA
PROJECT ENGINEER DATE

SANTA CLARA VALLEY WATER DISTRICT
Valley Water
PROJECT ENGINEER ACCEPTED BY DISTRICT DATE

PROJECT NAME AND SHEET DESCRIPTION:
LOWER PENITENCIA CREEK IMPROVEMENTS PROJECT
DEMOLITION PLAN
A-LINE STA 36+00 TO STA 48+00

SCALE: AS SHOWN
VERIFY SCALES: 0 1" BAR IS ONE INCH ON ORIGINAL DRAWING IF NOT ONE INCH ON THIS SHEET, ADJUST SCALES ACCORDINGLY
PROJECT NUMBER: 40334005
SHEET CODE: D-04
SHEET NUMBER: 20 OF 90

EXHIBIT C
LCC and LPC City Approved Drawings for Improvement Removal and Replacement (continued)

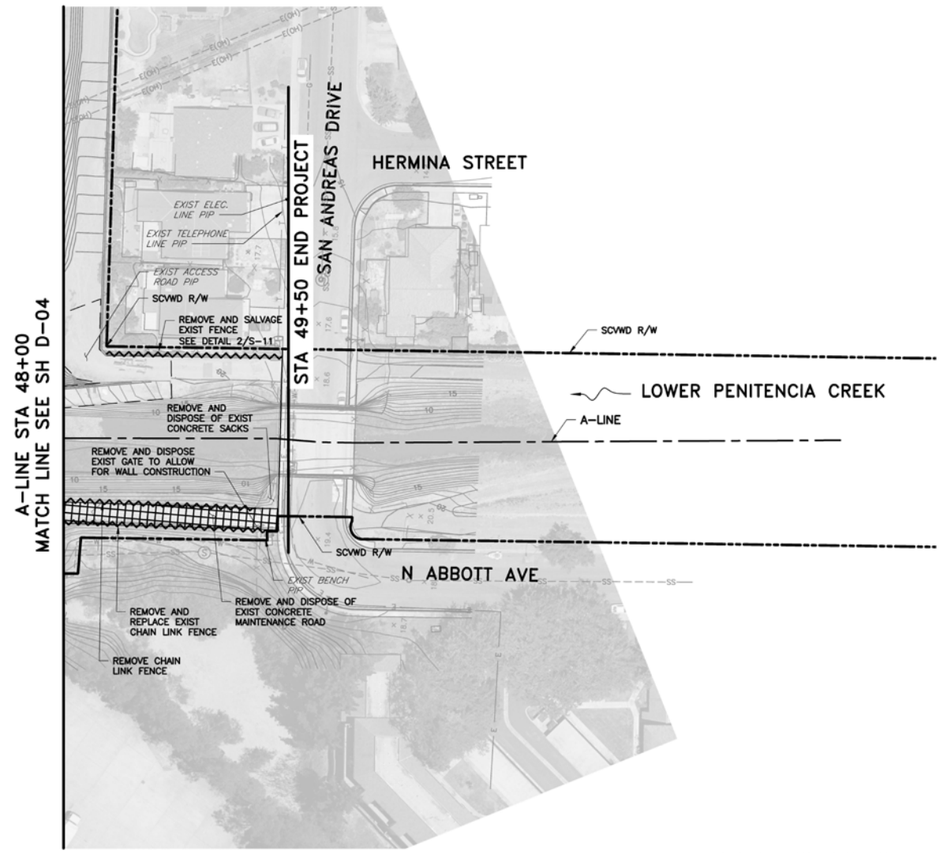

PLAN
SCALE 1" = 40'

DEMOLITION NOTES

1. ALL UTILITIES NOT NOTED TO BE REMOVED SHALL BE PROTECTED IN PLACE.
2. ALL UTILITY RELOCATIONS ARE THE RESPONSIBILITY OF THE CONTRACTOR.
3. ALL TREES NOT CALLED OUT FOR REMOVAL SHALL BE PROTECTED IN PLACE.
5. TREE REMOVAL PERMIT IS REQUIRED FROM THE CITY FOR ANY TREE REMOVAL WITHIN CITY RIGHT-OF-WAY. THIS PERMIT MUST BE OBTAINED PRIOR TO ISSUANCE OF CITY ENCROACHMENT PERMIT.
6. REFER TO CITY STD DWG 734 WHEN REPLACING BACKFLOW PREVENTERS.

LEGEND

- EXIST MAINTENANCE ROAD (PIP)
- TREE/BRUSH REMOVAL
- TREE/BUSH PROTECT IN PLACE
- REMOVE EXIST FENCE
- REMOVE AND DISPOSE OF EXIST AC ROADWAY
- REMOVE AND DISPOSE OF EXIST CONCRETE
- REMOVE AND DISPOSE OF EXIST ARTICULATED BLOCKS

REV	DESCRIPTION	DATE	APPR.	REFERENCE INFORMATION AND NOTES		DATE	ENGINEERING CERTIFICATION	SANTA CLARA VALLEY WATER DISTRICT	PROJECT NAME AND SHEET DESCRIPTION:	SCALE	PROJECT NUMBER
	FINAL 11/20/2020			1. AERIAL PHOTOGRAPHY WAS TAKEN AUGUST 15, 2019	TETRA TECH 17885 VON KARMAN AVE., SUITE 500 IRVINE, CA 92614	5/23/2019 DESIGN AWG DRAWN AWG CHECKED YHC	REGISTERED PROFESSIONAL ENGINEER ARIC TORRESON NO. 66068 EXP. 6-30-20 CIVIL STATE OF CALIFORNIA PROJECT ENGINEER DATE	Valley Water PROJECT ENGINEER ACCEPTED BY DISTRICT DATE	LOWER PENITENCIA CREEK IMPROVEMENTS PROJECT DEMOLITION PLAN A-LINE STA 48+00 TO STA 49+50	AS SHOWN VERIFY SCALES 0 1" BAR IS ONE INCH ON ORIGINAL DRAWING IF NOT ONE INCH ON THIS SHEET, ADJUST SCALES ACCORDINGLY	40334005 SHEET CODE: D-05 SHEET NUMBER: 21 OF 90

DOCUMENT NUMBER: XXXX-X-0000-0000000.00

USERNAME: Andy.gong 11/20/2020 12:28 PM
FILENAME: P:\Wat\T35945 Lower Penitencia Creek\04 Design\Sheets\D-05.dwg

EXHIBIT C
LCC and LPC City Approved Drawings for Improvement Removal and Replacement (continued)

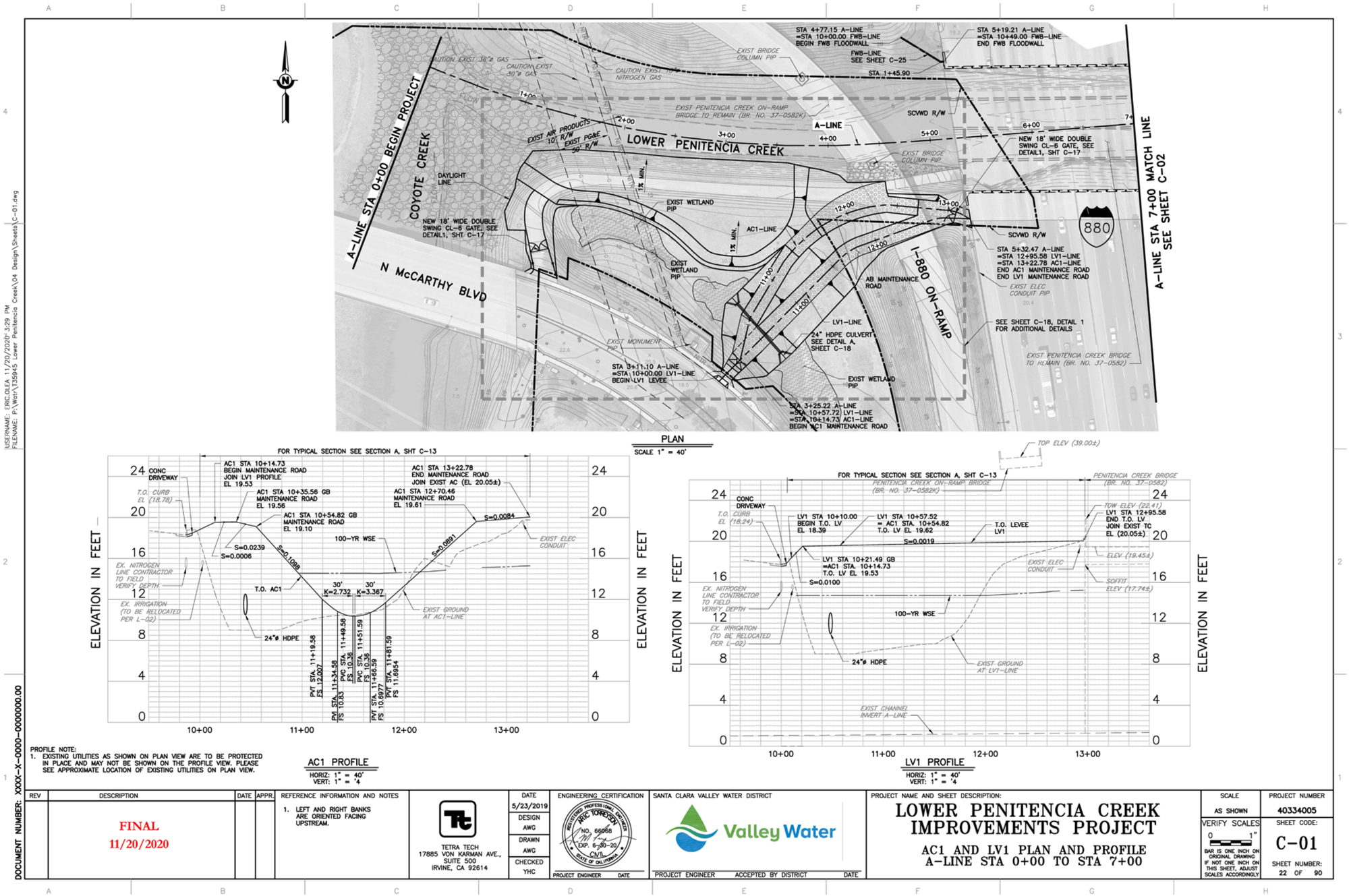

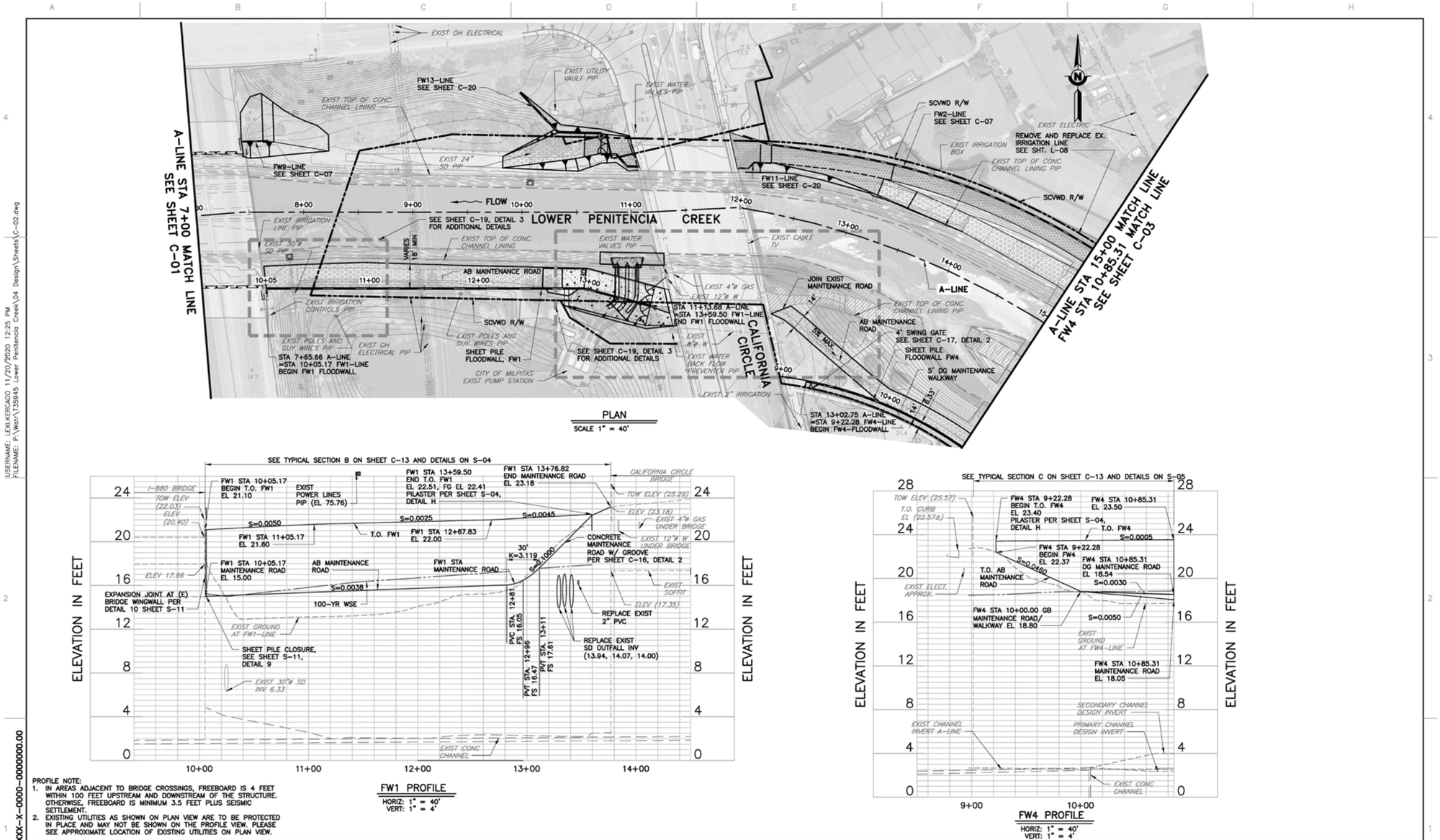

PROFILE NOTE:
1. IN AREAS ADJACENT TO BRIDGE CROSSINGS, FREEBOARD IS 4 FEET WITHIN 100 FEET UPSTREAM AND DOWNSTREAM OF THE STRUCTURE. OTHERWISE, FREEBOARD IS MINIMUM 3.5 FEET PLUS SEISMIC SETTLEMENT.
2. EXISTING UTILITIES AS SHOWN ON PLAN VIEW ARE TO BE PROTECTED IN PLACE AND MAY NOT BE SHOWN ON THE PROFILE VIEW. PLEASE SEE APPROXIMATE LOCATION OF EXISTING UTILITIES ON PLAN VIEW.

REV	DESCRIPTION	DATE	APPR.
	FINAL 11/20/2020		

REFERENCE INFORMATION AND NOTES
1. LEFT AND RIGHT BANKS ARE ORIENTED FACING UPSTREAM.

TETRA TECH
17885 VON KARMAN AVE., SUITE 500
IRVINE, CA 92614

DATE 5/23/2019
DESIGN AWG
DRAWN AWG
CHECKED YHC

ENGINEERING CERTIFICATION
REGISTERED PROFESSIONAL ENGINEER ARIC TORRESCH NO. 66068 EXP. 6-30-20 CIVIL STATE OF CALIFORNIA
PROJECT ENGINEER DATE

SANTA CLARA VALLEY WATER DISTRICT
Valley Water
PROJECT ENGINEER ACCEPTED BY DISTRICT DATE

PROJECT NAME AND SHEET DESCRIPTION:
LOWER PENITENCIA CREEK IMPROVEMENTS PROJECT
FW1 AND FW4 PLAN AND PROFILE
A-LINE STA 7+00 TO STA 15+00

SCALE: AS SHOWN
VERIFY SCALES: 0 — 1" BAR IS ONE INCH ON ORIGINAL DRAWING IF NOT ONE INCH ON THIS SHEET, ADJUST SCALES ACCORDINGLY
PROJECT NUMBER: 40334005
SHEET CODE: C-02
SHEET NUMBER: 23 OF 90

DOCUMENT NUMBER: XXXX-X-0000-0000000.00
USERNAME: LEXI.KERCADO 11/20/2020 12:25 PM
FILENAME: P:\Wat\T35945 Lower Penitencia Creek\04 Design\Sheets\C-02.dwg

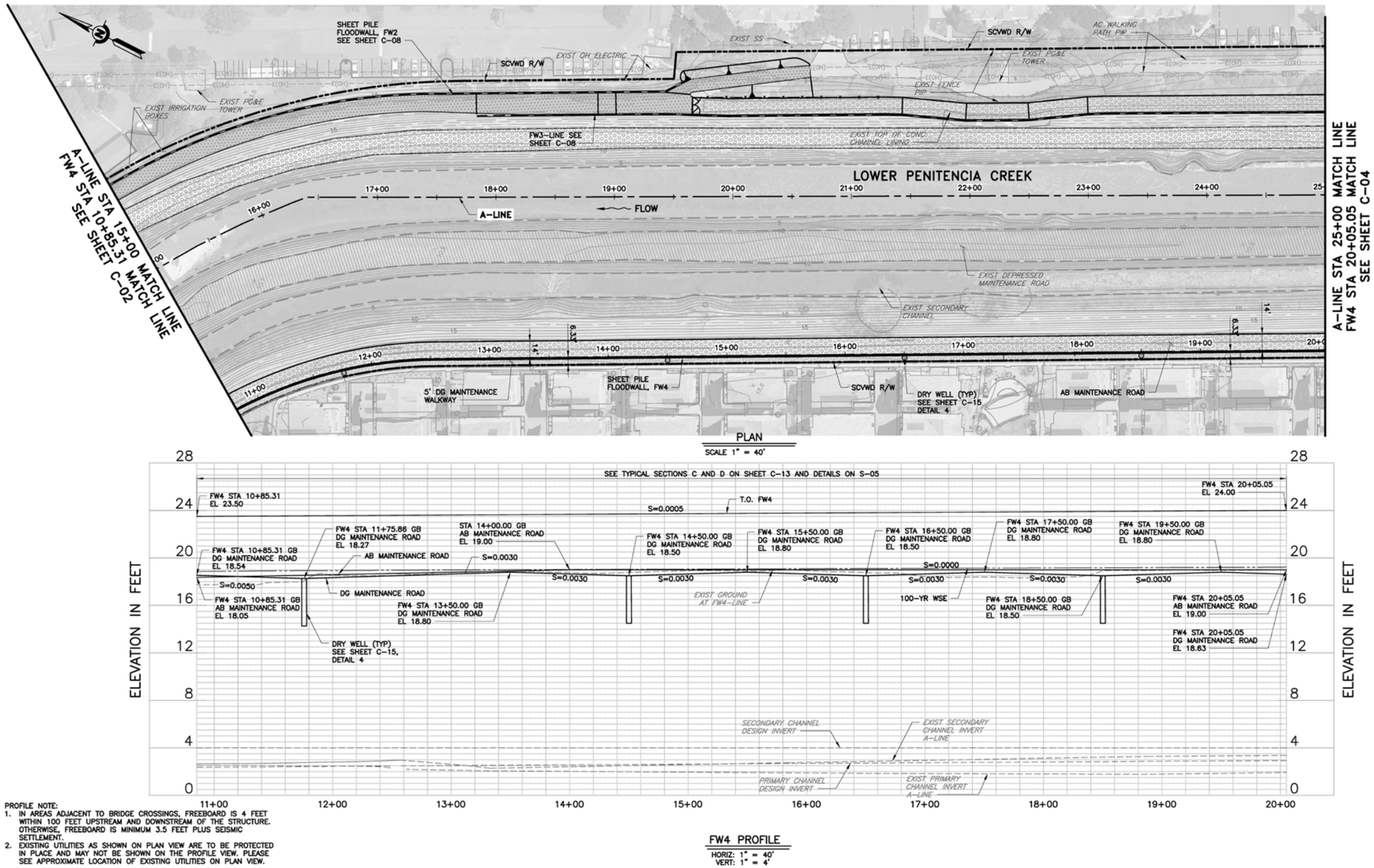

PROFILE NOTE:
1. IN AREAS ADJACENT TO BRIDGE CROSSINGS, FREEBOARD IS 4 FEET WITHIN 100 FEET UPSTREAM AND DOWNSTREAM OF THE STRUCTURE. OTHERWISE, FREEBOARD IS MINIMUM 3.5 FEET PLUS SEISMIC SETTLEMENT.
2. EXISTING UTILITIES AS SHOWN ON PLAN VIEW ARE TO BE PROTECTED IN PLACE AND MAY NOT BE SHOWN ON THE PROFILE VIEW. PLEASE SEE APPROXIMATE LOCATION OF EXISTING UTILITIES ON PLAN VIEW.

REV	DESCRIPTION	DATE	APPR.
	FINAL 11/20/2020		

REFERENCE INFORMATION AND NOTES
1. RIGHT OF WAY AND CONTROL LINE ARE GIS BASED AND ARE FOR PLANNING LEVEL ONLY.
2. LEFT AND RIGHT BANKS ARE ORIENTED FACING UPSTREAM.

TETRA TECH
17885 VON KARMAN AVE., SUITE 500
IRVINE, CA 92614

DATE 5/23/2019
DESIGN AWG
DRAWN AWG
CHECKED YHC

ENGINEERING CERTIFICATION
REGISTERED PROFESSIONAL ENGINEER ARIC TORRESON NO. 66968 EXP. 6-30-20 CIVIL STATE OF CALIFORNIA
PROJECT ENGINEER DATE

SANTA CLARA VALLEY WATER DISTRICT
Valley Water
PROJECT ENGINEER ACCEPTED BY DISTRICT DATE

PROJECT NAME AND SHEET DESCRIPTION:
LOWER PENITENCIA CREEK IMPROVEMENTS PROJECT
FW4 PLAN AND PROFILE
A-LINE STA 15+00 TO STA 25+00

SCALE: AS SHOWN
VERIFY SCALES: 0 — 1" BAR IS ONE INCH ON ORIGINAL DRAWING IF NOT ONE INCH ON THIS SHEET, ADJUST SCALES ACCORDINGLY
PROJECT NUMBER: 40334005
SHEET CODE: C-03
SHEET NUMBER: 24 OF 90

DOCUMENT NUMBER: XXXX-X-0000-0000000.00
USERNAME: Jake.corner 11/20/2020 12:30 PM
FILENAME: P:\Wat\T35945 Lower Penitencia Creek\04 Design\Sheets\C-03.dwg

EXHIBIT C
LCC and LPC City Approved Drawings for Improvement Removal and Replacement (continued)

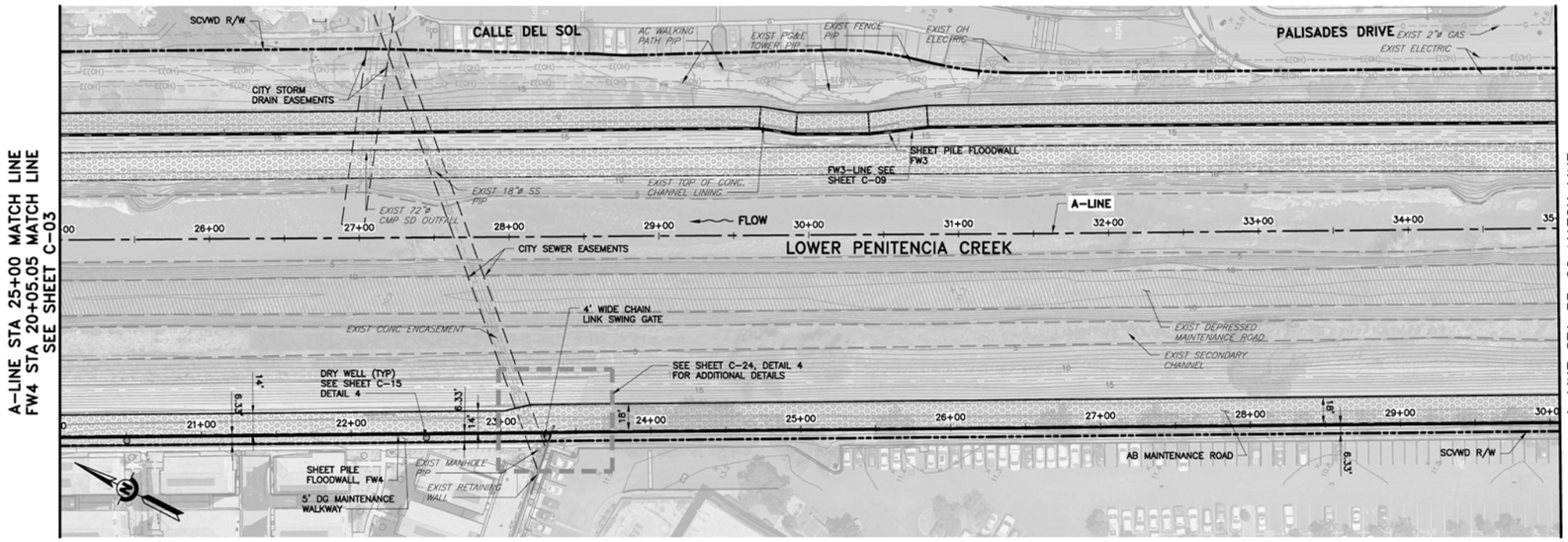

PLAN
SCALE 1" = 40'

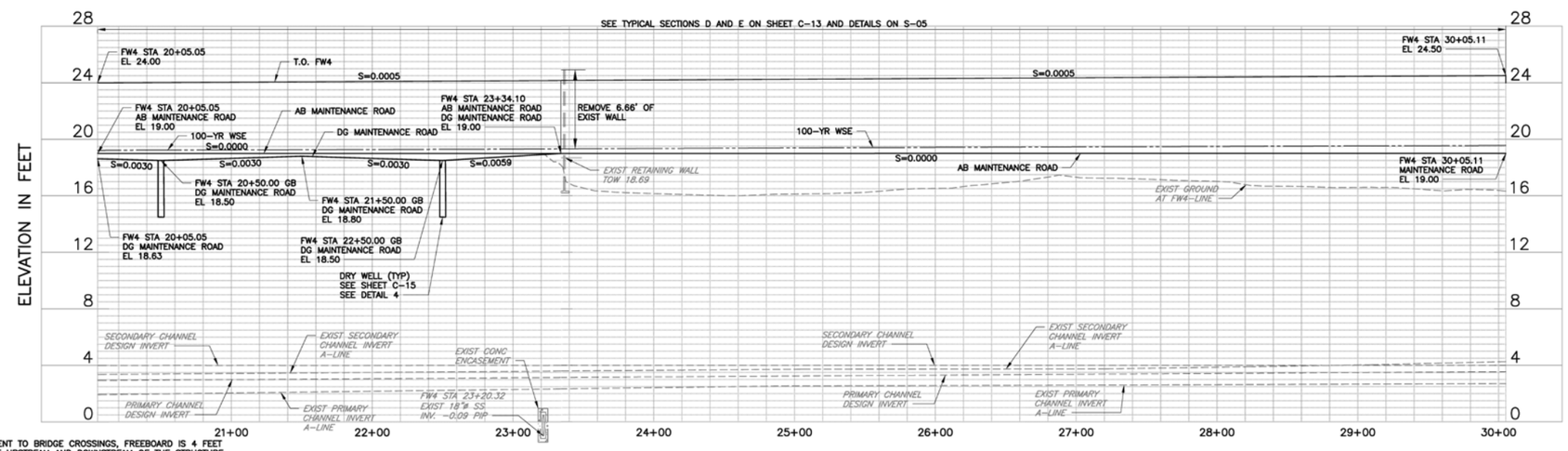

PROFILE NOTE:
1. IN AREAS ADJACENT TO BRIDGE CROSSINGS, FREEBOARD IS 4 FEET WITHIN 100 FEET UPSTREAM AND DOWNSTREAM OF THE STRUCTURE. OTHERWISE, FREEBOARD IS MINIMUM 3.5 FEET PLUS SEISMIC SETTLEMENT.
2. EXISTING UTILITIES AS SHOWN ON PLAN VIEW ARE TO BE PROTECTED IN PLACE AND MAY NOT BE SHOWN ON THE PROFILE VIEW. PLEASE SEE APPROXIMATE LOCATION OF EXISTING UTILITIES ON PLAN VIEW.

FW4 PROFILE
HORIZ: 1" = 40'
VERT: 1" = 4'

REV	DESCRIPTION	DATE	APPR.
	FINAL 11/20/2020		

REFERENCE INFORMATION AND NOTES
1. LEFT AND RIGHT BANKS ARE ORIENTED FACING UPSTREAM.

TETRA TECH
17885 VON KARMAN AVE., SUITE 500
IRVINE, CA 92614

DATE 5/23/2019
DESIGN AWG
DRAWN AWG
CHECKED YHC

ENGINEERING CERTIFICATION
REGISTERED PROFESSIONAL ENGINEER ARIC TORRESDEY NO. 66068 EXP. 6-30-20 CIVIL STATE OF CALIFORNIA
PROJECT ENGINEER DATE

SANTA CLARA VALLEY WATER DISTRICT
Valley Water
PROJECT ENGINEER ACCEPTED BY DISTRICT DATE

PROJECT NAME AND SHEET DESCRIPTION:
LOWER PENITENCIA CREEK IMPROVEMENTS PROJECT
FW4 PLAN AND PROFILE
A-LINE STA 25+00 TO STA 35+00

SCALE: AS SHOWN
VERIFY SCALES: 0 1" BAR IS ONE INCH ON ORIGINAL DRAWING IF NOT ONE INCH ON THIS SHEET, ADJUST SCALES ACCORDINGLY
PROJECT NUMBER: 40334005
SHEET CODE: C-04
SHEET NUMBER: 25 OF 90

DOCUMENT NUMBER: XXXX-X-0000-0000000.00
USERNAME: Andy.gong 11/20/2020 12:34 PM
FILENAME: P:\Wat\T35945 Lower Penitencia Creek\04 Design\Sheets\C-04.dwg

EXHIBIT C
LCC and LPC City Approved Drawings for Improvement Removal and Replacement (continued)

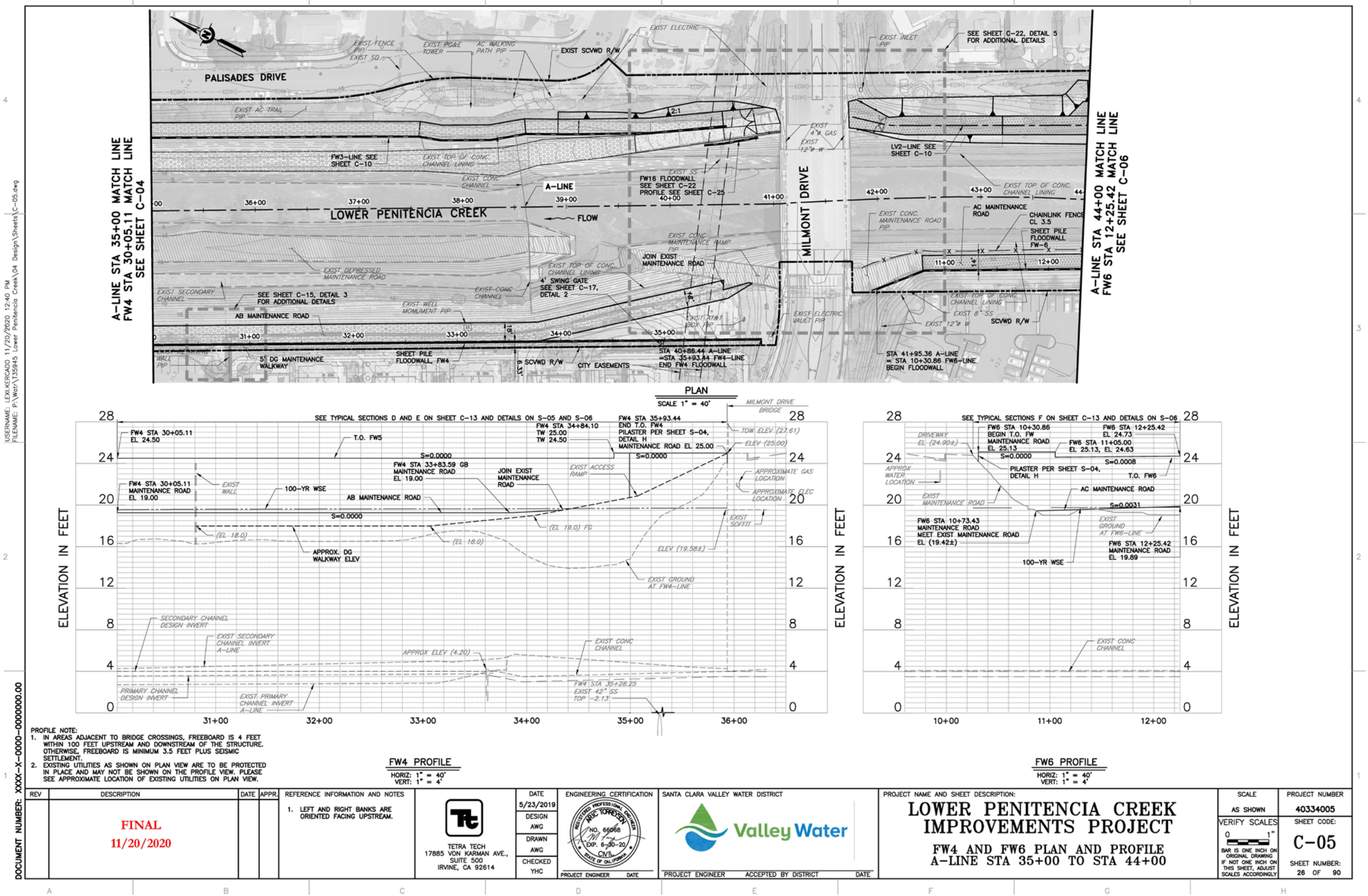

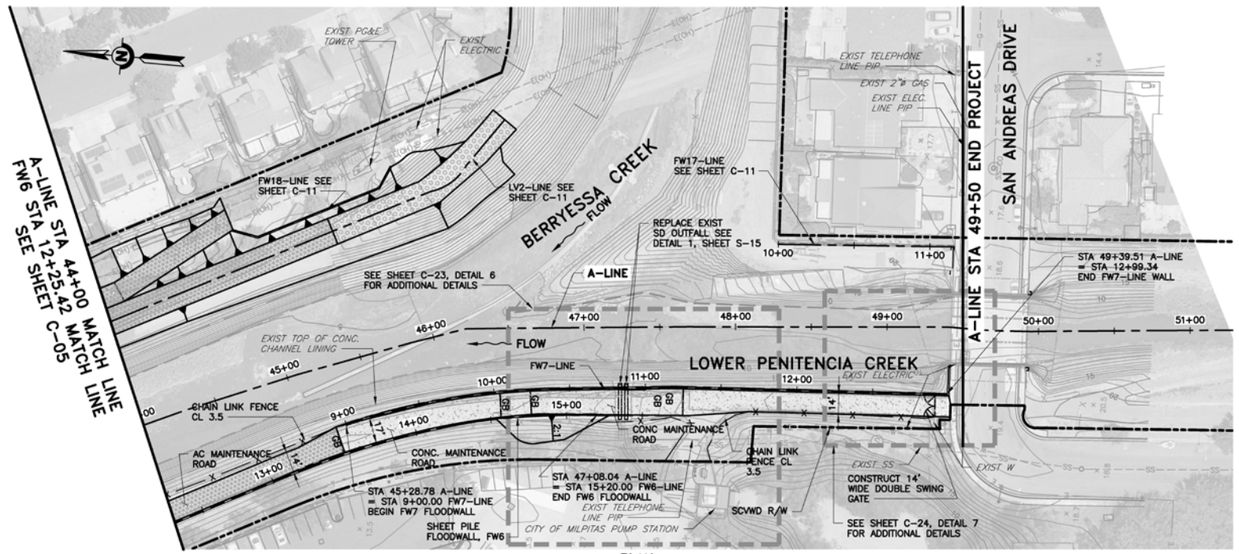

PLAN
SCALE 1" = 40'

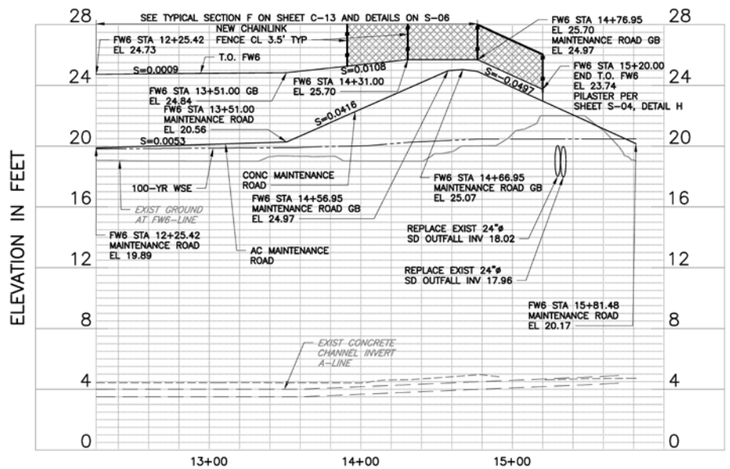

FW6 PROFILE
HORIZ: 1" = 40'
VERT: 1" = 4'

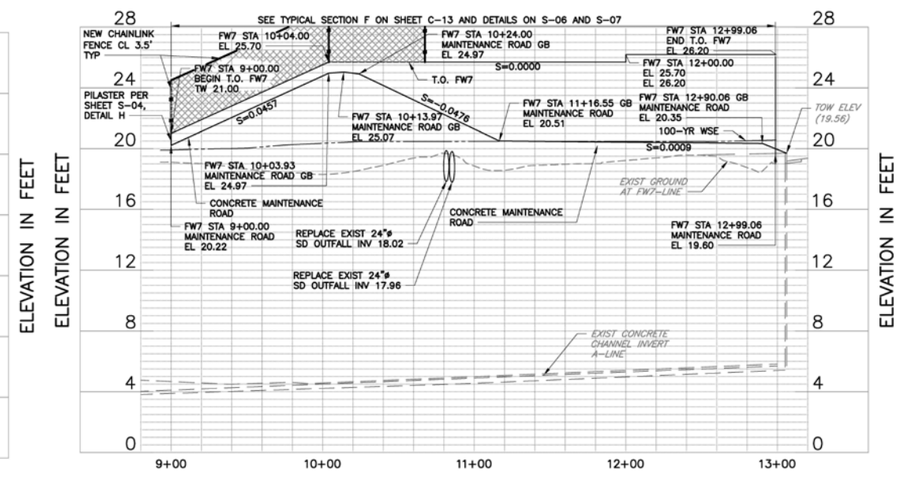

FW7 PROFILE
HORIZ: 1" = 40'
VERT: 1" = 4'

PROFILE NOTE:
1. IN AREAS ADJACENT TO BRIDGE CROSSINGS, FREEBOARD IS 4 FEET WITHIN 100 FEET UPSTREAM AND DOWNSTREAM OF THE STRUCTURE. OTHERWISE, FREEBOARD IS MINIMUM 3.5 FEET PLUS SEISMIC SETTLEMENT.
2. EXISTING UTILITIES AS SHOWN ON PLAN VIEW ARE TO BE PROTECTED IN PLACE AND MAY NOT BE SHOWN ON THE PROFILE VIEW. PLEASE SEE APPROXIMATE LOCATION OF EXISTING UTILITIES ON PLAN VIEW.

REV	DESCRIPTION	DATE	APPR.
	FINAL 11/20/2020		

REFERENCE INFORMATION AND NOTES
1. LEFT AND RIGHT BANKS ARE ORIENTED FACING UPSTREAM.

TETRA TECH
17885 VON KARMAN AVE., SUITE 500
IRVINE, CA 92614

DATE 5/23/2019
DESIGN AWG
DRAWN AWG
CHECKED YHC

ENGINEERING CERTIFICATION
REGISTERED PROFESSIONAL ENGINEER ARIC TORRESDEY NO. 66068 EXP. 6-30-20 CIVIL STATE OF CALIFORNIA
PROJECT ENGINEER DATE

SANTA CLARA VALLEY WATER DISTRICT
Valley Water
PROJECT ENGINEER ACCEPTED BY DISTRICT DATE

PROJECT NAME AND SHEET DESCRIPTION:
LOWER PENITENCIA CREEK IMPROVEMENTS PROJECT
FW6, FW7, AND FW15 PLAN AND PROFILE
A-LINE STA 44+00 TO STA 49+50

SCALE: AS SHOWN
VERIFY SCALES: 0 1" BAR IS ONE INCH ON ORIGINAL DRAWING IF NOT ONE INCH ON THIS SHEET, ADJUST SCALES ACCORDINGLY
PROJECT NUMBER: 40334005
SHEET CODE: C-06
SHEET NUMBER: 27 OF 90

DOCUMENT NUMBER: XXXX-X-0000-0000000.00
USERNAME: Andy.gong 11/20/2020 12:44 PM
FILENAME: P:\Wat\T35945 Lower Penitencia Creek\04 Design\Sheets\C-06.dwg

EXHIBIT C
LCC and LPC City Approved Drawings for Improvement Removal and Replacement (continued)

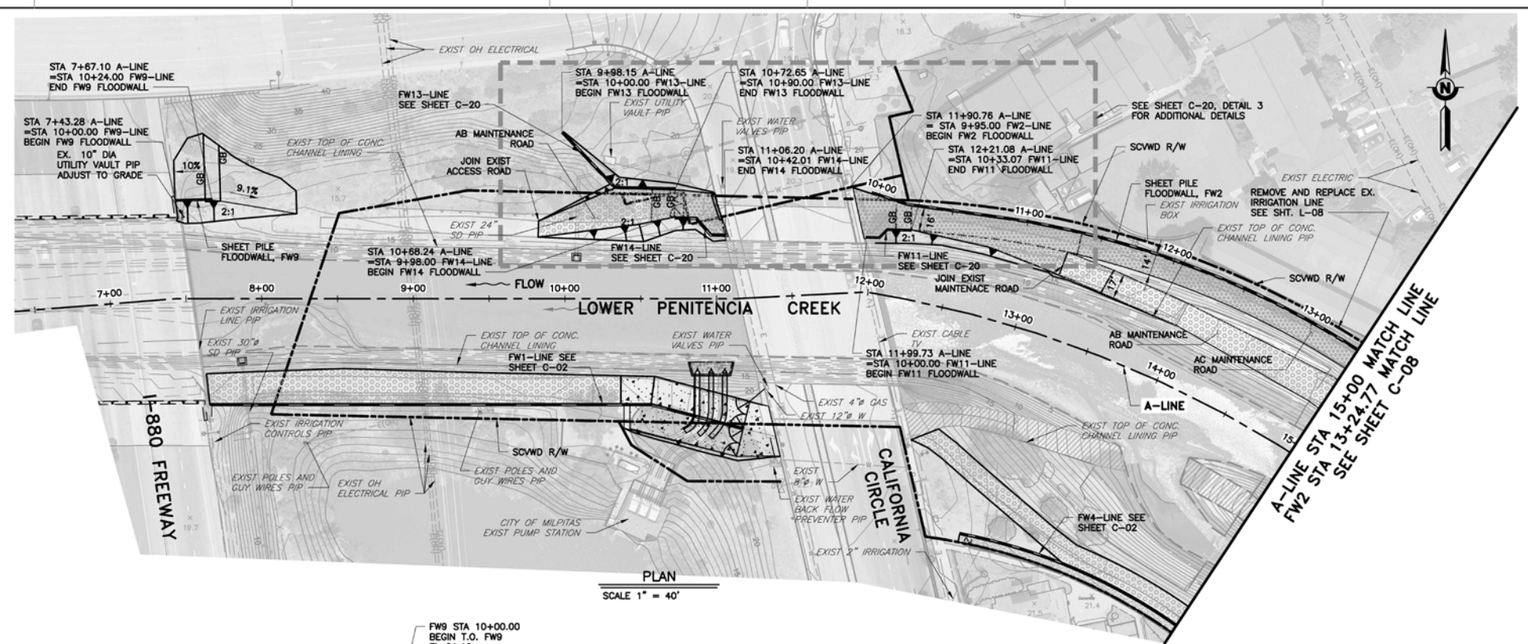

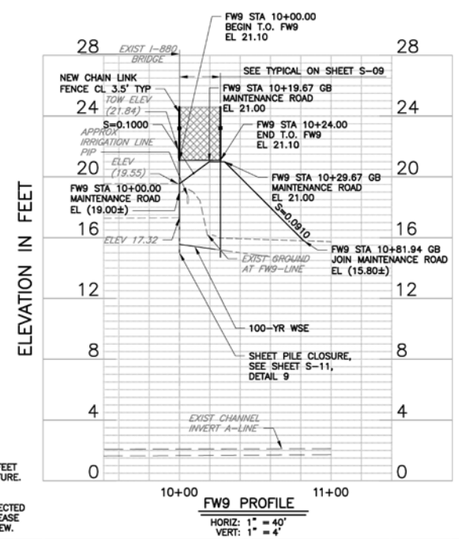

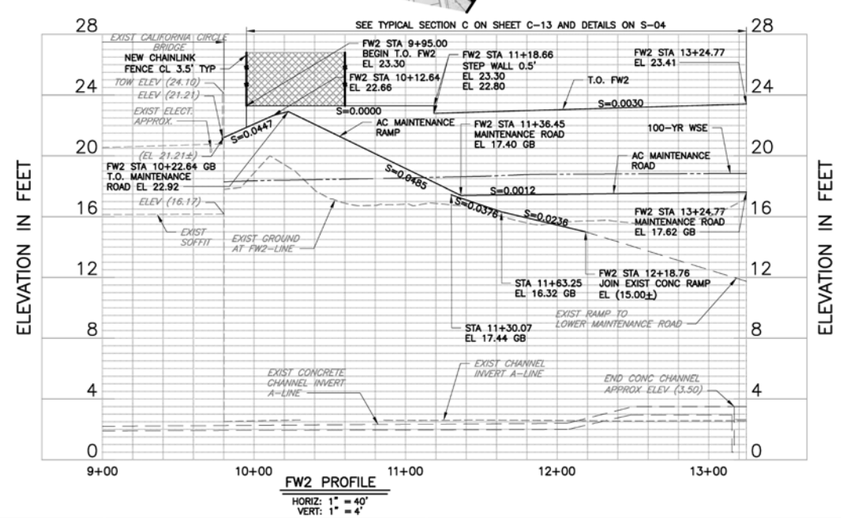

PROFILE NOTE:
1. IN AREAS ADJACENT TO BRIDGE CROSSINGS, FREEBOARD IS 4 FEET WITHIN 100 FEET UPSTREAM AND DOWNSTREAM OF THE STRUCTURE. OTHERWISE, FREEBOARD IS MINIMUM 3.5 FEET PLUS SEISMIC SETTLEMENT.
2. EXISTING UTILITIES AS SHOWN ON PLAN VIEW ARE TO BE PROTECTED IN PLACE AND MAY NOT BE SHOWN ON THE PROFILE VIEW. PLEASE SEE APPROXIMATE LOCATION OF EXISTING UTILITIES ON PLAN VIEW.

REV	DESCRIPTION	DATE	APPR.
	FINAL 11/20/2020		

REFERENCE INFORMATION AND NOTES
1. LEFT AND RIGHT BANKS ARE ORIENTED FACING UPSTREAM.

TETRA TECH
17885 VON KARMAN AVE., SUITE 500
IRVINE, CA 92614

DATE 5/23/2019
DESIGN AWG
DRAWN AWG
CHECKED YHC

ENGINEERING CERTIFICATION
REGISTERED PROFESSIONAL ENGINEER ARIC TORRESON NO. 66068 EXP. 6-30-20 CIVIL STATE OF CALIFORNIA
PROJECT ENGINEER DATE

SANTA CLARA VALLEY WATER DISTRICT
Valley Water
PROJECT ENGINEER ACCEPTED BY DISTRICT DATE

PROJECT NAME AND SHEET DESCRIPTION:
LOWER PENITENCIA CREEK IMPROVEMENTS PROJECT
FW2 AND FW9 PLAN AND PROFILE
A-LINE STA 7+00 TO STA 15+00

SCALE: AS SHOWN
VERIFY SCALES: 0 1" BAR IS ONE INCH ON ORIGINAL DRAWING IF NOT ONE INCH ON THIS SHEET, ADJUST SCALES ACCORDINGLY
PROJECT NUMBER: 40334005
SHEET CODE: C-07
SHEET NUMBER: 28 OF 90

USERNAME: Andy.gong 11/20/2020 12:49 PM
FILENAME: P:\Wat\T35945 Lower Penitencia Creek\04 Design\Sheets\C-07.dwg
DOCUMENT NUMBER: XXXX-X-0000-0000000.00

EXHIBIT C
LCC and LPC City Approved Drawings for Improvement Removal and Replacement (continued)

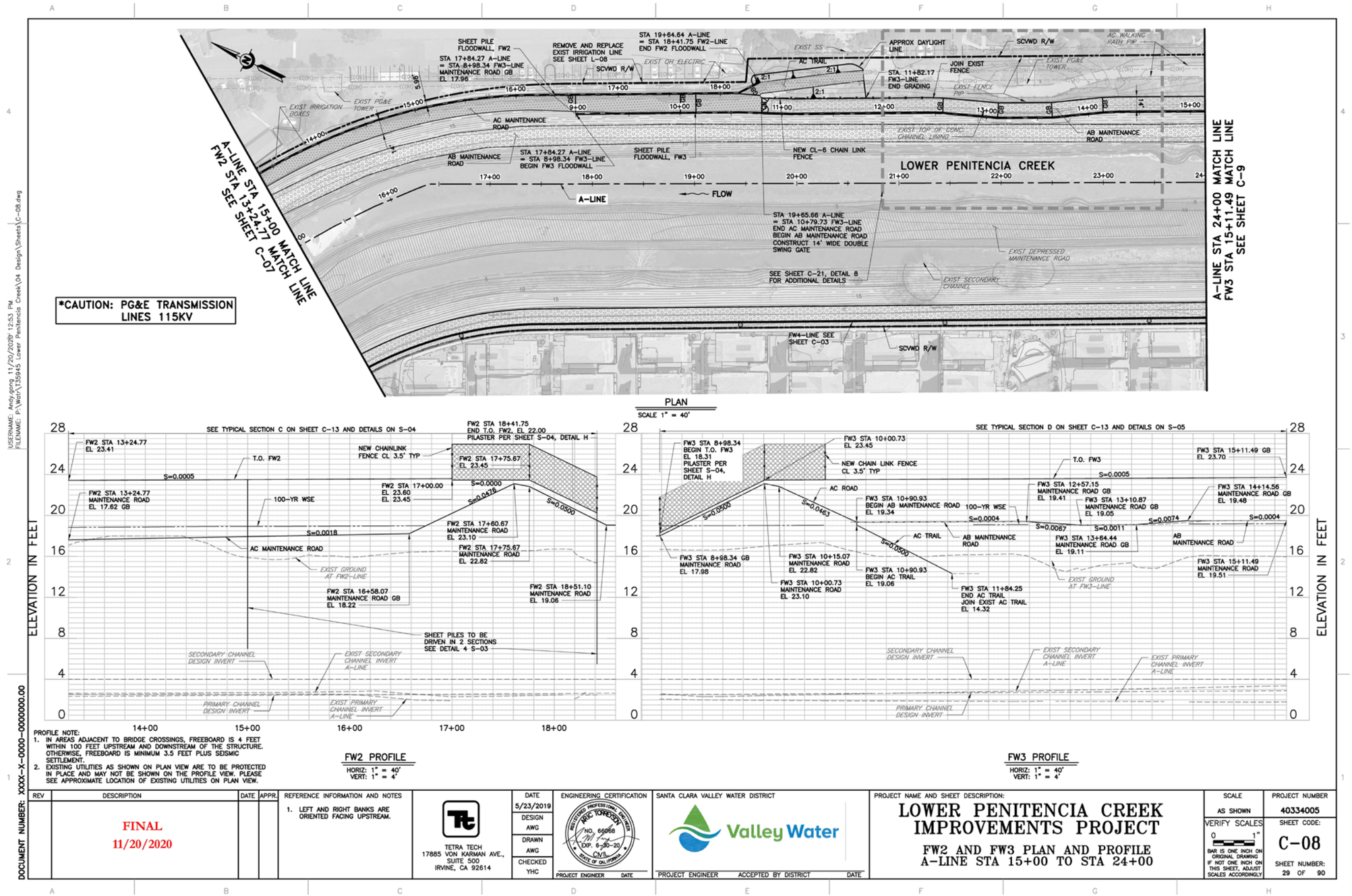

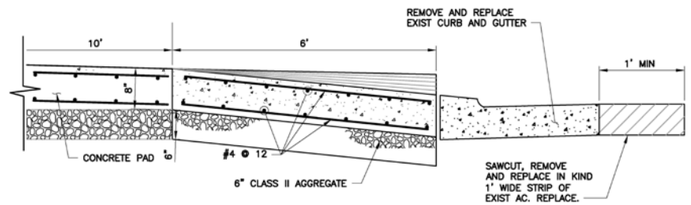

DETAIL A NTS

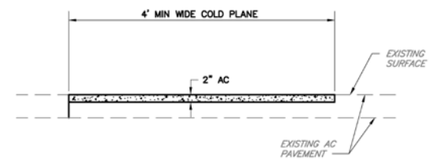

DETAIL 3 C-19 COLD PLANE DETAIL NTS

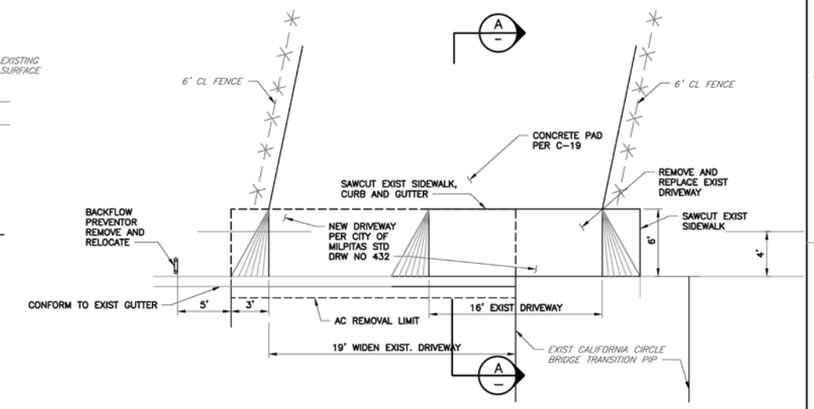

DETAIL 2 C-19 D-01 CONCRETE DRIVEWAY DETAIL NTS

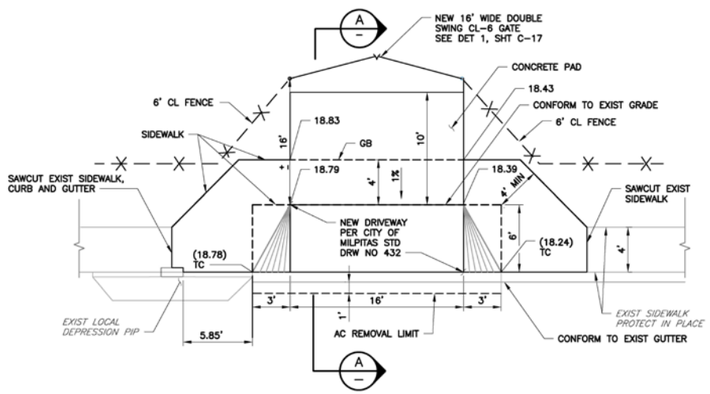

DETAIL 1 C-18 CONCRETE DRIVEWAY DETAIL NTS

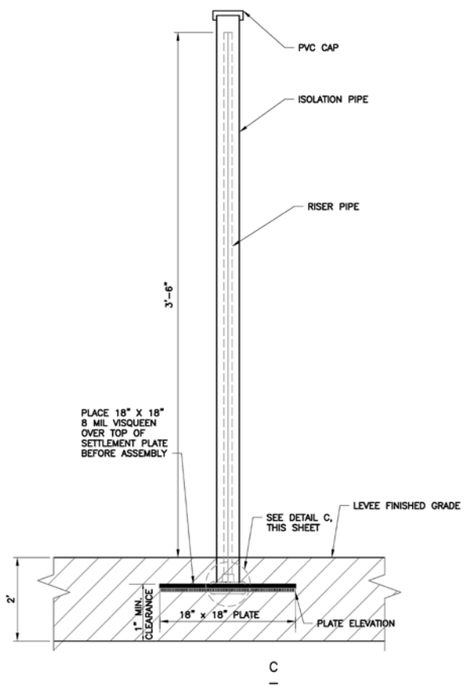

DETAIL 4 C-23 SETTLEMENT PLATE NTS

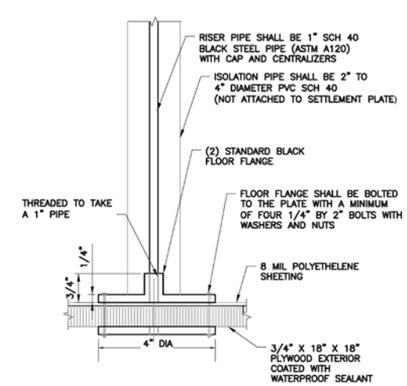

DETAIL C SCALE: NTS

USERNAME: Andy.gong 11/20/2020 12:48 PM
FILENAME: P:\Work\135945 Lower Penitencia Creek\04 Design\Sheets\C-12.dwg

DOCUMENT NUMBER: XXXX-X-0000-0000000.00

REV	DESCRIPTION	DATE	APPR.	REFERENCE INFORMATION AND NOTES
	FINAL 11/20/2020			

TETRA TECH
17885 VON KARMAN AVE., SUITE 500
IRVINE, CA 92614

DATE 5/23/2019
DESIGN AWG
DRAWN AWG
CHECKED YHC

ENGINEERING CERTIFICATION
REGISTERED PROFESSIONAL ENGINEER ERIC TORRESON NO. 66968 EXP. 6-30-20 CIVIL STATE OF CALIFORNIA
PROJECT ENGINEER DATE

SANTA CLARA VALLEY WATER DISTRICT
Valley Water
PROJECT ENGINEER ACCEPTED BY DISTRICT DATE

PROJECT NAME AND SHEET DESCRIPTION:
LOWER PENITENCIA CREEK IMPROVEMENTS PROJECT
MISCELLANEOUS DETAILS

SCALE: AS SHOWN
VERIFY SCALES: 0 1" BAR IS ONE INCH ON ORIGINAL DRAWING IF NOT ONE INCH ON THIS SHEET, ADJUST SCALES ACCORDINGLY

PROJECT NUMBER: 40334005
SHEET CODE: C-12
SHEET NUMBER: 33 OF 90

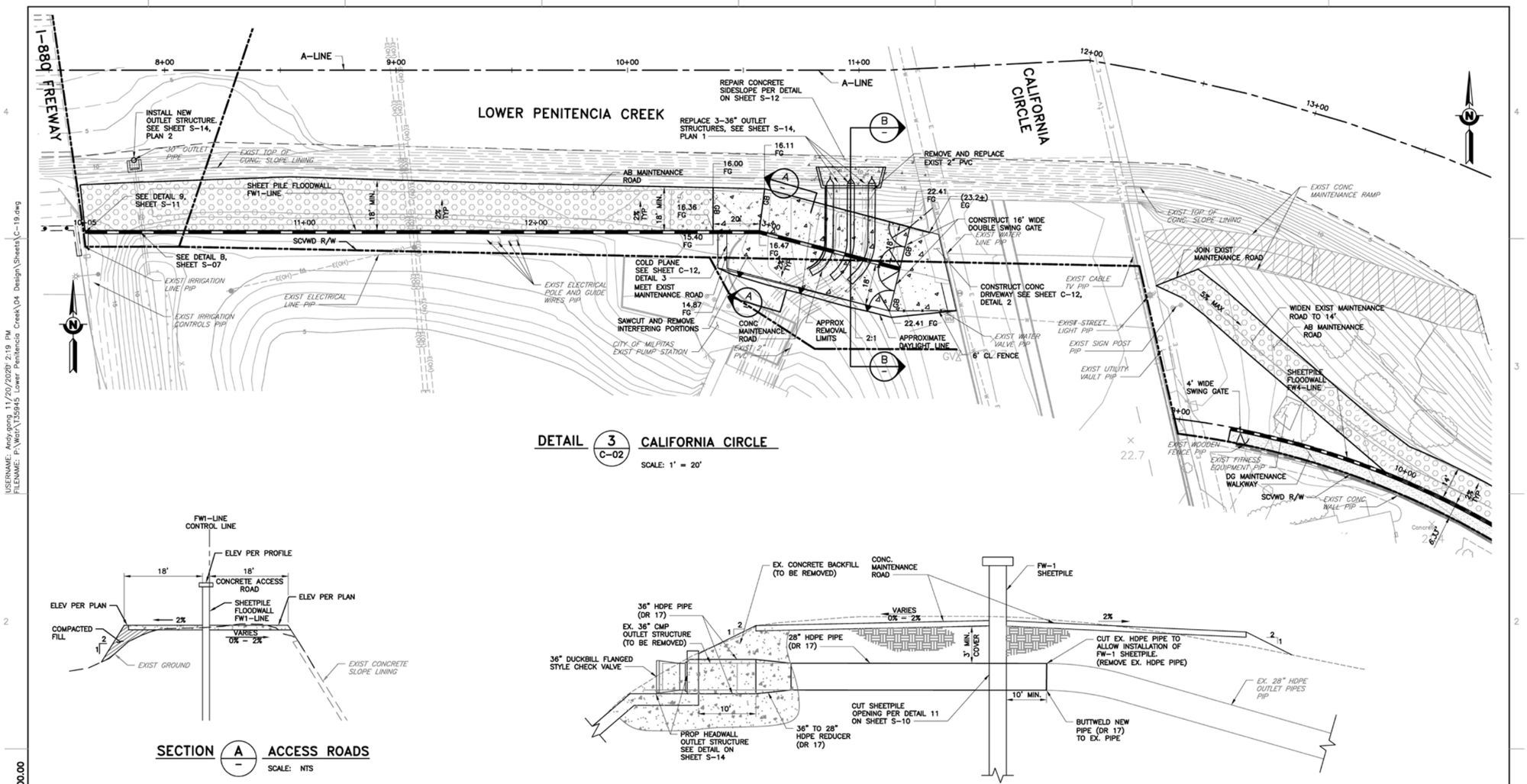

DETAIL 3 / C-02 CALIFORNIA CIRCLE

SCALE: 1' = 20'

SECTION A / - ACCESS ROADS

SCALE: NTS

SECTION B / - CALIFORNIA CIRCLE PUMP STATION – 36" OUTLET STRUCTURE

SCALE: NTS

NOTES:

1. THE CONTRACTOR SHALL COORDINATE WITH THE CITY'S PUBLIC WORKS INSPECTOR THE LOCATION OF THE CONNECTION IN THE FIELD PRIOR TO THE START OF ANY WORK ON THE STORM DRAIN OUTFALL PIPES AT THE PUMP STATION.

REV	DESCRIPTION	DATE	APPR.	REFERENCE INFORMATION AND NOTES
	FINAL 11/20/2020			

TETRA TECH
17885 VON KARMAN AVE., SUITE 500
IRVINE, CA 92614

DATE 5/23/2019
DESIGN AWG
DRAWN AWG
CHECKED YHC

ENGINEERING CERTIFICATION
REGISTERED PROFESSIONAL ENGINEER ERIC TORRESON NO. 66068 EXP. 6-30-21 CIVIL STATE OF CALIFORNIA
PROJECT ENGINEER DATE

SANTA CLARA VALLEY WATER DISTRICT
Valley Water
PROJECT ENGINEER ACCEPTED BY DISTRICT DATE

PROJECT NAME AND SHEET DESCRIPTION:
LOWER PENITENCIA CREEK IMPROVEMENTS PROJECT
I-880 AND CALIFORNIA CIRCLE DETAILS

SCALE: AS SHOWN
VERIFY SCALES: 0 1" BAR IS ONE INCH ON ORIGINAL DRAWING IF NOT ONE INCH ON THIS SHEET, ADJUST SCALES ACCORDINGLY
PROJECT NUMBER: 40334005
SHEET CODE: C-19
SHEET NUMBER: 40 OF 90

DOCUMENT NUMBER: XXXX-X-0000-0000000.00
USERNAME: Andy.gong 11/20/2020 2:19 PM
FILENAME: P:\Wat\T35945 Lower Penitencia Creek\04 Design\Sheets\C-19.dwg

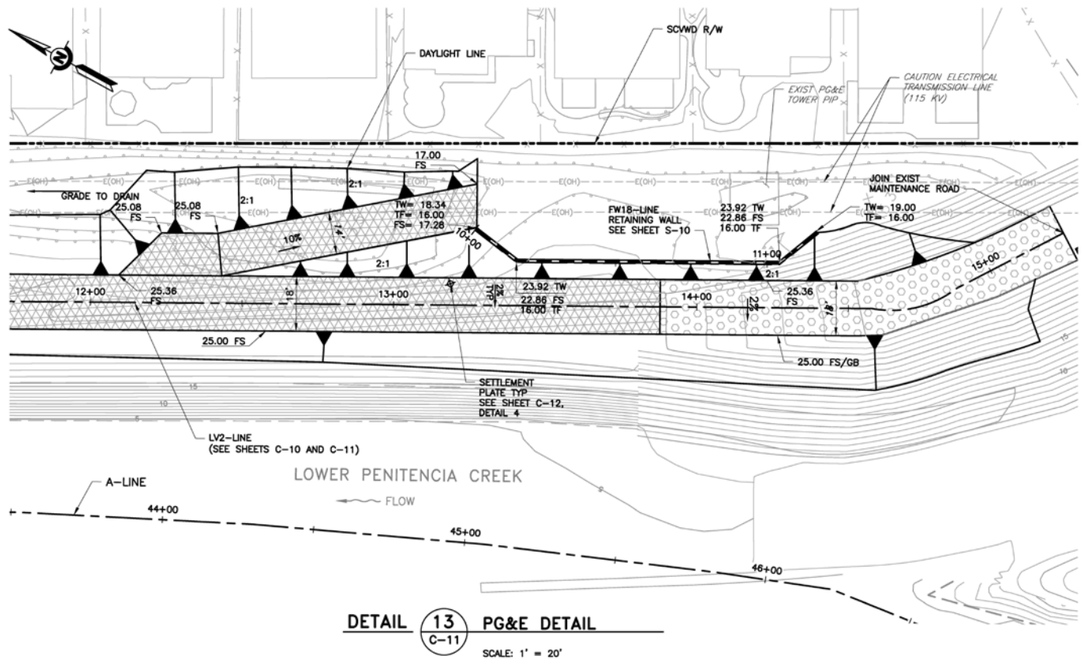

DETAIL 13 / C-11 PG&E DETAIL
SCALE: 1' = 20'

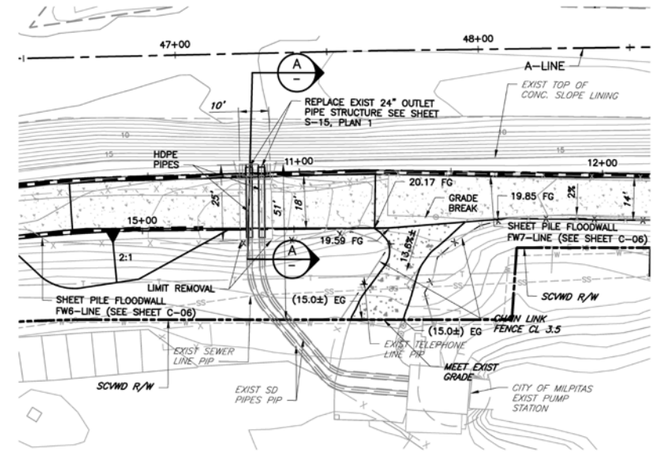

DETAIL 6 / C-06 ABBOT AVE PUMP STATION AT STATION 48+00
SCALE: 1' = 20'

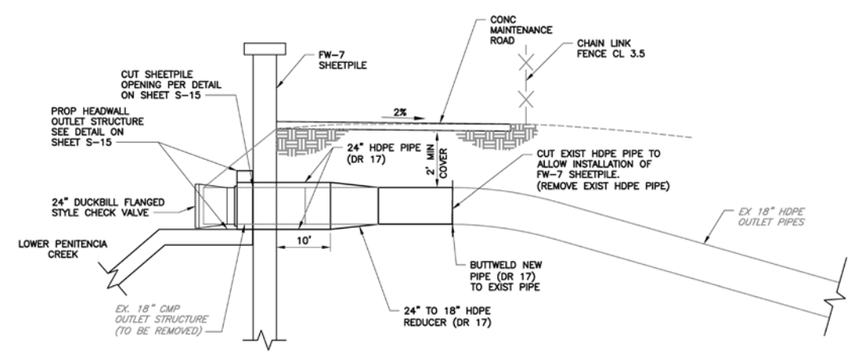

SECTION A ABBOT AVE PUMP STATION
SCALE: NTS

NOTES:

1. THE CONTRACTOR SHALL COORDINATE WITH THE CITY'S PUBLIC WORKS INSPECTOR THE LOCATION OF THE CONNECTION IN THE FIELD PRIOR TO THE START OF ANY WORK ON THE STORM DRAIN OUTFALL PIPES AT THE PUMP STATION.

USERNAME: Andy.gong 11/20/2020 2:34 PM
FILENAME: P:\Wat\T35945 Lower Penitencia Creek\04 Design\Sheets\C-23.dwg

DOCUMENT NUMBER: XXXX-X-0000-0000000.00

REV	DESCRIPTION	DATE	APPR.	REFERENCE INFORMATION AND NOTES
	FINAL 11/20/2020			

TETRA TECH
17885 VON KARMAN AVE., SUITE 500
IRVINE, CA 92614

DATE 5/23/2019
DESIGN AWG
DRAWN AWG
CHECKED YHC

ENGINEERING CERTIFICATION
REGISTERED PROFESSIONAL ENGINEER ERIC TORRESDAL NO. 66068 EXP. 6-30-20 CIVIL STATE OF CALIFORNIA
PROJECT ENGINEER DATE

SANTA CLARA VALLEY WATER DISTRICT
Valley Water
PROJECT ENGINEER ACCEPTED BY DISTRICT DATE

PROJECT NAME AND SHEET DESCRIPTION:
LOWER PENITENCIA CREEK IMPROVEMENTS PROJECT
BERRYESSA CREEK CONFLUENCE AND PUMP STATION DETAILS

SCALE: AS SHOWN
VERIFY SCALES: 0 1" BAR IS ONE INCH ON ORIGINAL DRAWING IF NOT ONE INCH ON THIS SHEET, ADJUST SCALES ACCORDINGLY
PROJECT NUMBER: 40334005
SHEET CODE: C-23
SHEET NUMBER: 44 OF 90

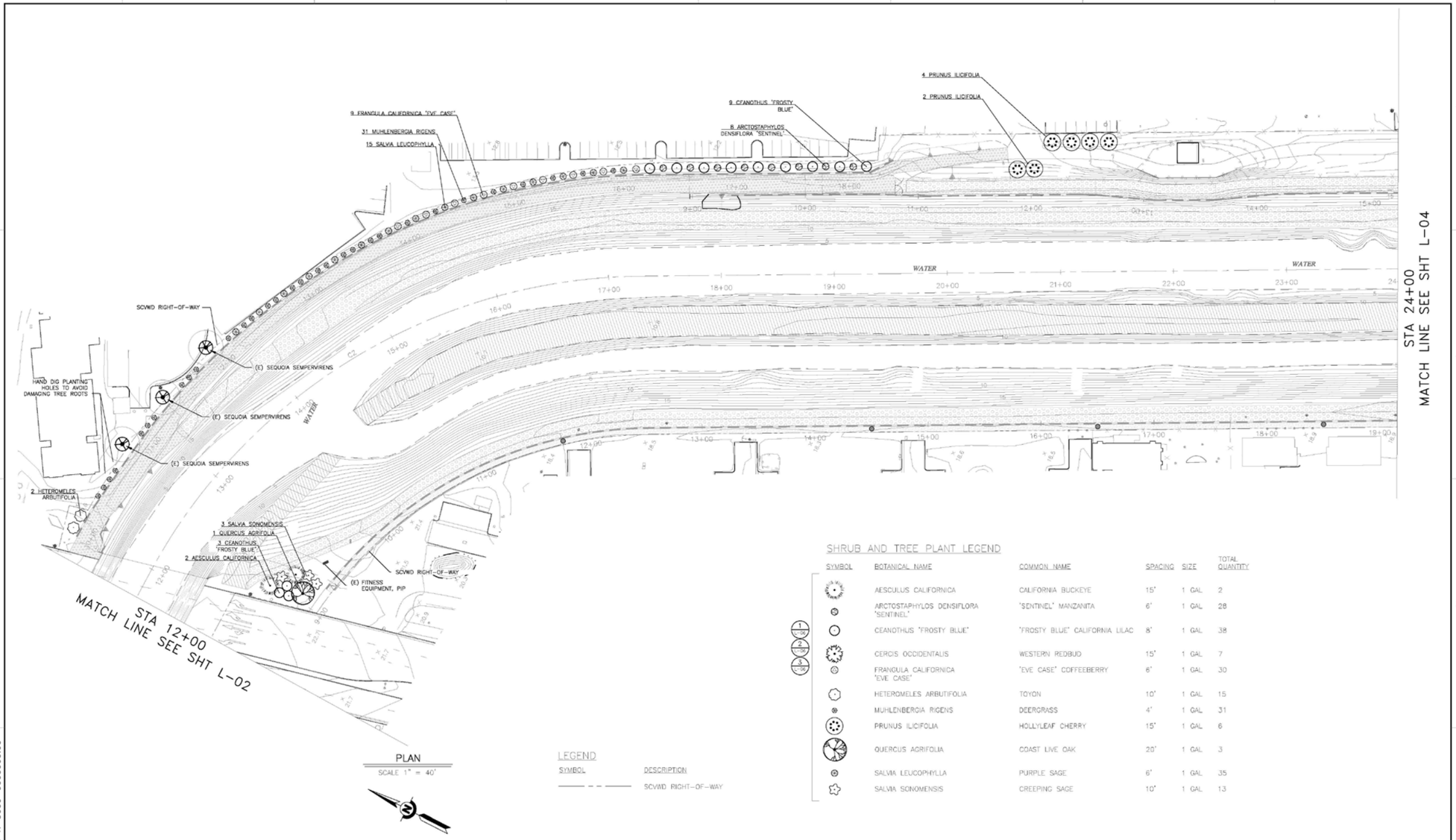
4 PRUNUS ILICIFOLIA
2 PRUNUS ILICIFOLIA
9 CEANOTHUS "FROSTY BLUE"
8 ARCTOSTAPHYLOS DENSIFLORA "SENTINEL"
9 FRANGULA CALIFORNICA "EVE CASE"
31 MUHLENBERGIA RIGENS
15 SALVIA LEUCOPHYLLA
WATER
WATER
SCVWD RIGHT-OF-WAY
(E) SEQUOIA SEMPERVIRENS
(E) SEQUOIA SEMPERVIRENS
(E) SEQUOIA SEMPERVIRENS
HAND DIG PLANTING HOLES TO AVOID DAMAGING TREE ROOTS
2 HETEROMELES ARBUTIFOLIA
3 SALVIA SONOMENSIS
1 QUERCUS AGRIFOLIA
3 CEANOTHUS "FROSTY BLUE"
2 AESCULUS CALIFORNICA
(E) FITNESS EQUIPMENT, PIP
SCVWD RIGHT-OF-WAY
STA 24+00
MATCH LINE SEE SHT L-04
STA 12+00
MATCH LINE SEE SHT L-02
PLAN
SCALE 1" = 40'
LEGEND
SYMBOL
DESCRIPTION
SCVWD RIGHT-OF-WAY
SHRUB AND TREE PLANT LEGEND
SYMBOL | BOTANICAL NAME | COMMON NAME | SPACING | SIZE | TOTAL QUANTITY
AESCULUS CALIFORNICA | CALIFORNIA BUCKEYE | 15' | 1 GAL | 2
ARCTOSTAPHYLOS DENSIFLORA "SENTINEL" | "SENTINEL" MANZANITA | 6' | 1 GAL | 28
CEANOTHUS "FROSTY BLUE" | "FROSTY BLUE" CALIFORNIA LILAC | 8' | 1 GAL | 38
CERCIS OCCIDENTALIS | WESTERN REDBUD | 15' | 1 GAL | 7
FRANGULA CALIFORNICA "EVE CASE" | "EVE CASE" COFFEEBERRY | 6' | 1 GAL | 30
HETEROMELES ARBUTIFOLIA | TOYON | 10' | 1 GAL | 15
MUHLENBERGIA RIGENS | DEERGRASS | 4' | 1 GAL | 31
PRUNUS ILICIFOLIA | HOLLYLEAF CHERRY | 15' | 1 GAL | 6
QUERCUS AGRIFOLIA | COAST LIVE OAK | 20' | 1 GAL | 3
SALVIA LEUCOPHYLLA | PURPLE SAGE | 6' | 1 GAL | 35
SALVIA SONOMENSIS | CREEPING SAGE | 10' | 1 GAL | 13
REV | DESCRIPTION | DATE | APPR. | REFERENCE INFORMATION AND NOTES
100% SUBMITTAL
11/02/2020
wra
ENVIRONMENTAL CONSULTANTS
2169-G East Francisco Blvd.
San Rafael, CA 94901
(415) 454-8868 Phone
(415) 454-0129 Fax
DATE 11/2/2020
DESIGN ICM
DRAWN ICM
CHECKED ICM
LANDSCAPE ARCHITECT STAMP
LANDSCAPE ARCHITECT DATE
SANTA CLARA VALLEY WATER DISTRICT
Valley Water
PROJECT ENGINEER ACCEPTED BY DISTRICT DATE
PROJECT NAME AND SHEET DESCRIPTION:
LOWER PENITENCIA CREEK IMPROVEMENTS PROJECT
PLANTING PLAN
A-LINE STA 12+00 TO STA 24+00
SCALE AS SHOWN
VERIFY SCALES
BAR IS ONE INCH ON ORIGINAL DRAWING IF NOT ONE INCH ON THIS SHEET, ADJUST SCALES ACCORDINGLY
PROJECT NUMBER
SHEET CODE: L-03
SHEET NUMBER: 60 OF 90
DOCUMENT NUMBER: XXXX-X-0000-0000000.00

EXHIBIT C
LCC and LPC City Approved Drawings for Improvement Removal and Replacement (continued)

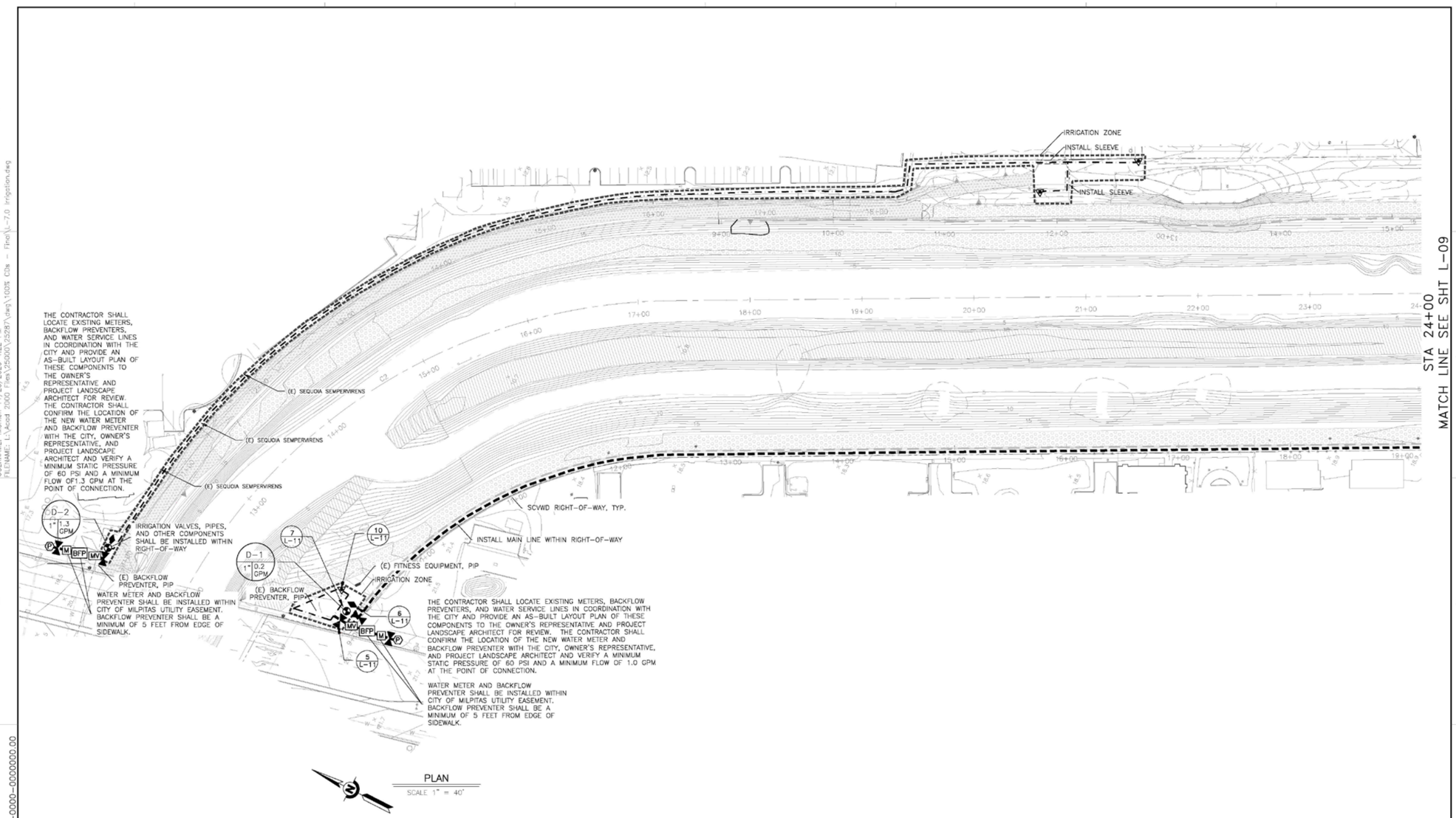

REV	DESCRIPTION	DATE	APPR.	REFERENCE INFORMATION AND NOTES
	100% SUBMITTAL 11/02/2020			

wra ENVIRONMENTAL CONSULTANTS
2169-G East Francisco Blvd.
San Rafael, CA 94901
(415) 454-8868 Phone
(415) 454-0129 Fax

DATE 11/2/2020
DESIGN ICM
DRAWN ICM
CHECKED ICM

LANDSCAPE ARCHITECT STAMP
LANDSCAPE ARCHITECT DATE

SANTA CLARA VALLEY WATER DISTRICT
Valley Water
PROJECT ENGINEER ACCEPTED BY DISTRICT DATE

PROJECT NAME AND SHEET DESCRIPTION:
LOWER PENITENCIA CREEK IMPROVEMENTS PROJECT
IRRIGATION PLAN
A-LINE STA 12+00 TO STA 24+00

SCALE AS SHOWN
VERIFY SCALES 0 1"
BAR IS ONE INCH ON ORIGINAL DRAWING IF NOT ONE INCH ON THIS SHEET, ADJUST SCALES ACCORDINGLY

PROJECT NUMBER
SHEET CODE: L-08
SHEET NUMBER: 65 OF 90

DOCUMENT NUMBER: XXXX-X-0000-0000000.00

EXHIBIT C
LCC and LPC City Approved Drawings for Improvement Removal and Replacement (continued)

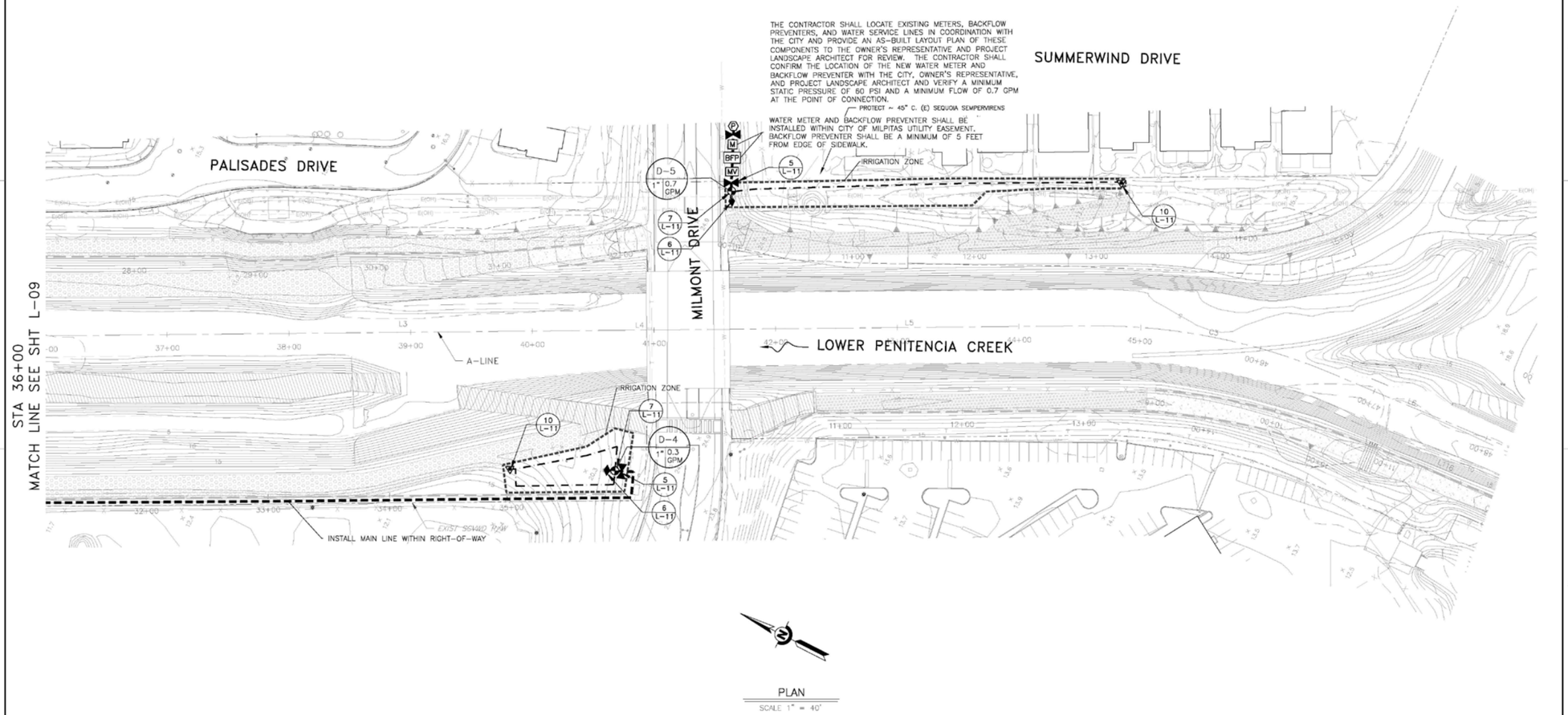

REV	DESCRIPTION	DATE	APPR.	REFERENCE INFORMATION AND NOTES
	100% SUBMITTAL 11/02/2020			

wra ENVIRONMENTAL CONSULTANTS
2169-G East Francisco Blvd.
San Rafael, CA 94901
(415) 454-8868 Phone
(415) 454-0129 Fax

DATE 11/2/2020
DESIGN ICM
DRAWN ICM
CHECKED ICM

LANDSCAPE ARCHITECT STAMP — LANDSCAPE ARCHITECT DATE

SANTA CLARA VALLEY WATER DISTRICT — Valley Water — PROJECT ENGINEER ACCEPTED BY DISTRICT DATE

PROJECT NAME AND SHEET DESCRIPTION:
LOWER PENITENCIA CREEK IMPROVEMENTS PROJECT
IRRIGATION PLAN
A-LINE STA 36+00 TO STA 48+00

SCALE: AS SHOWN
VERIFY SCALES: 0 — 1" BAR IS ONE INCH ON ORIGINAL DRAWING IF NOT ONE INCH ON THIS SHEET, ADJUST SCALES ACCORDINGLY
PROJECT NUMBER
SHEET CODE: L-10
SHEET NUMBER: 67 OF 90

DOCUMENT NUMBER: XXXX-X-0000-0000000.00

EXHIBIT D
LCC and LPC Extent of Black Vinyl Fences

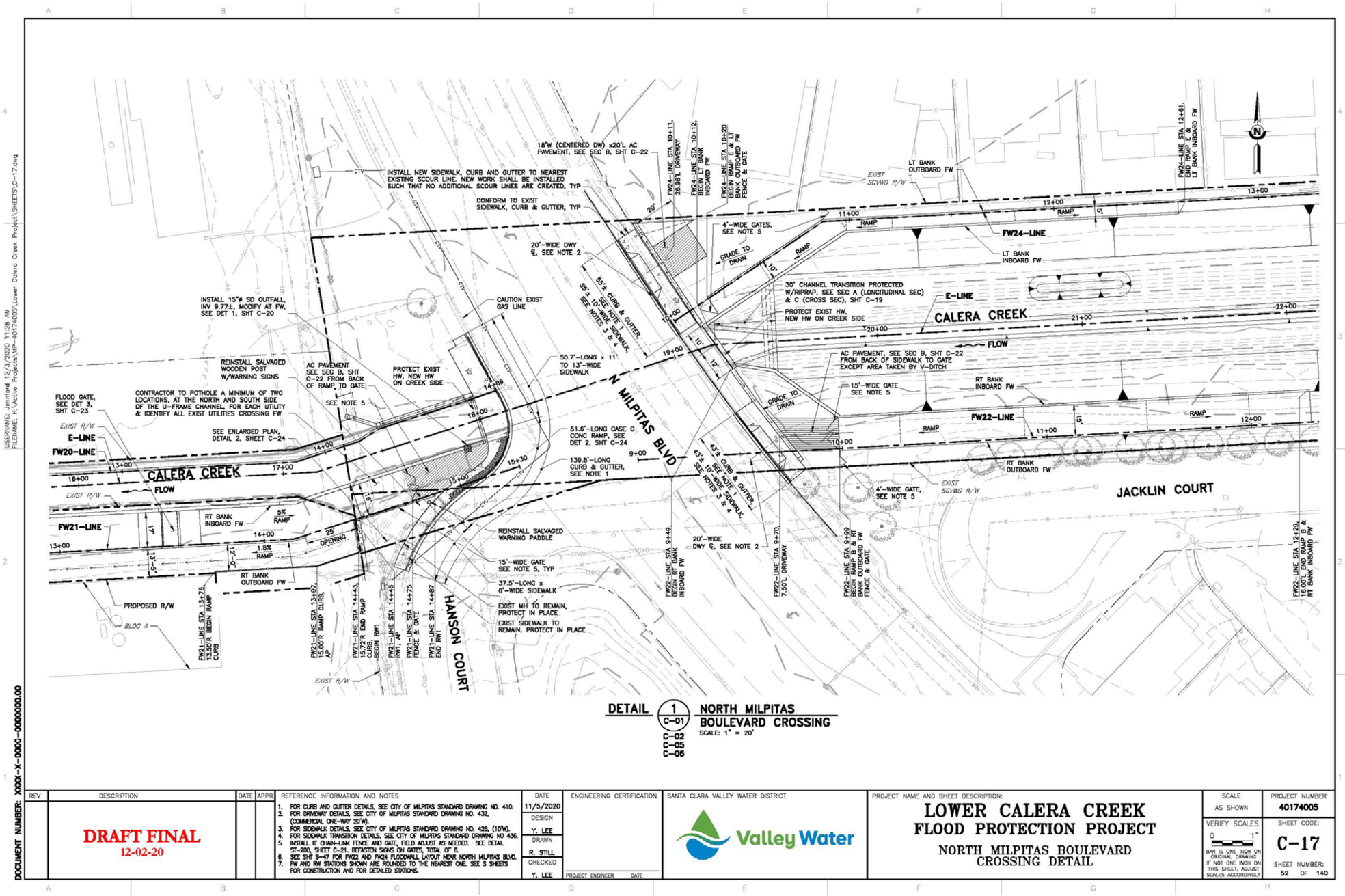

EXHIBIT D
LCC and LPC Extent of Black Vinyl Fences (continued)

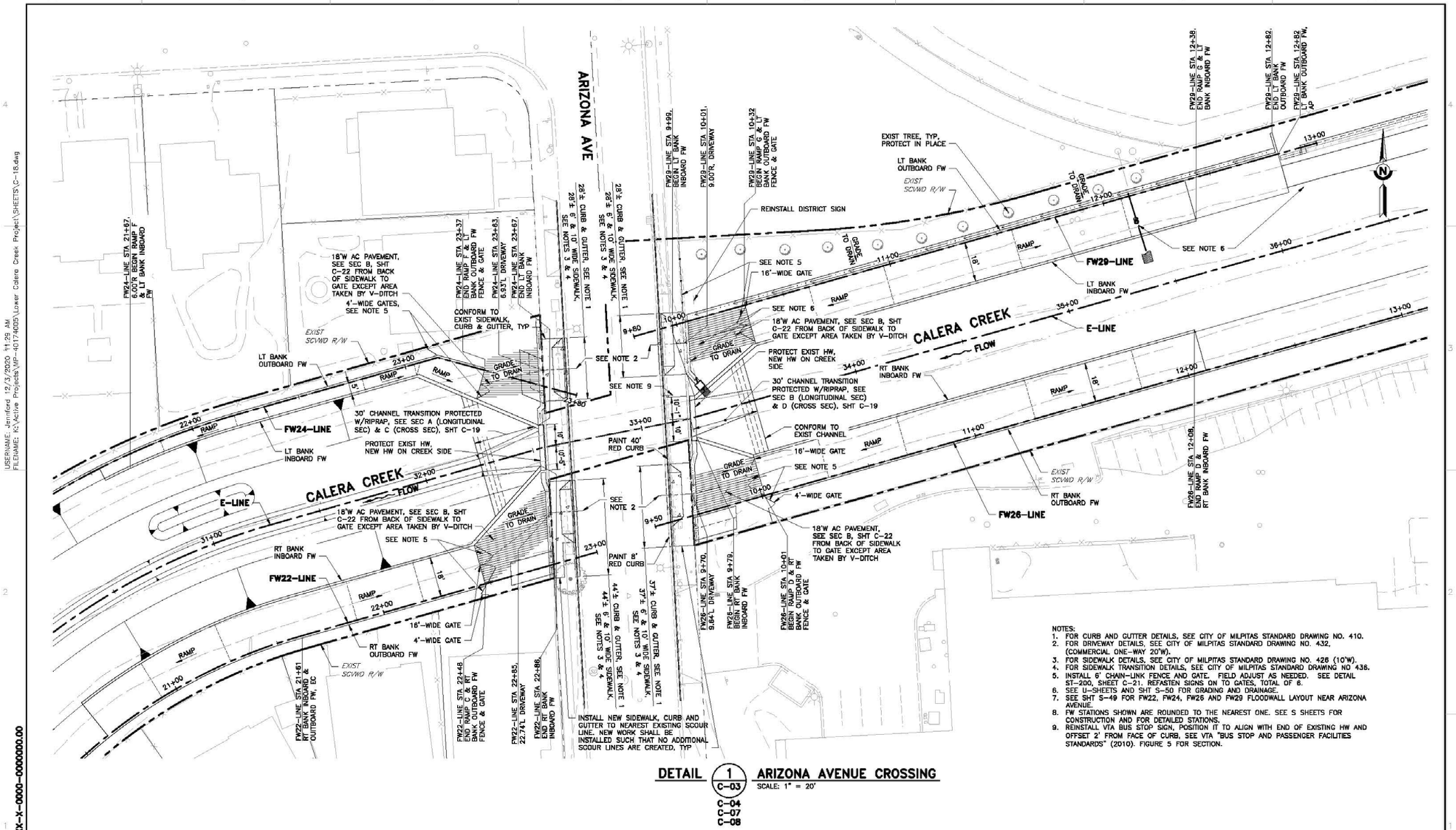

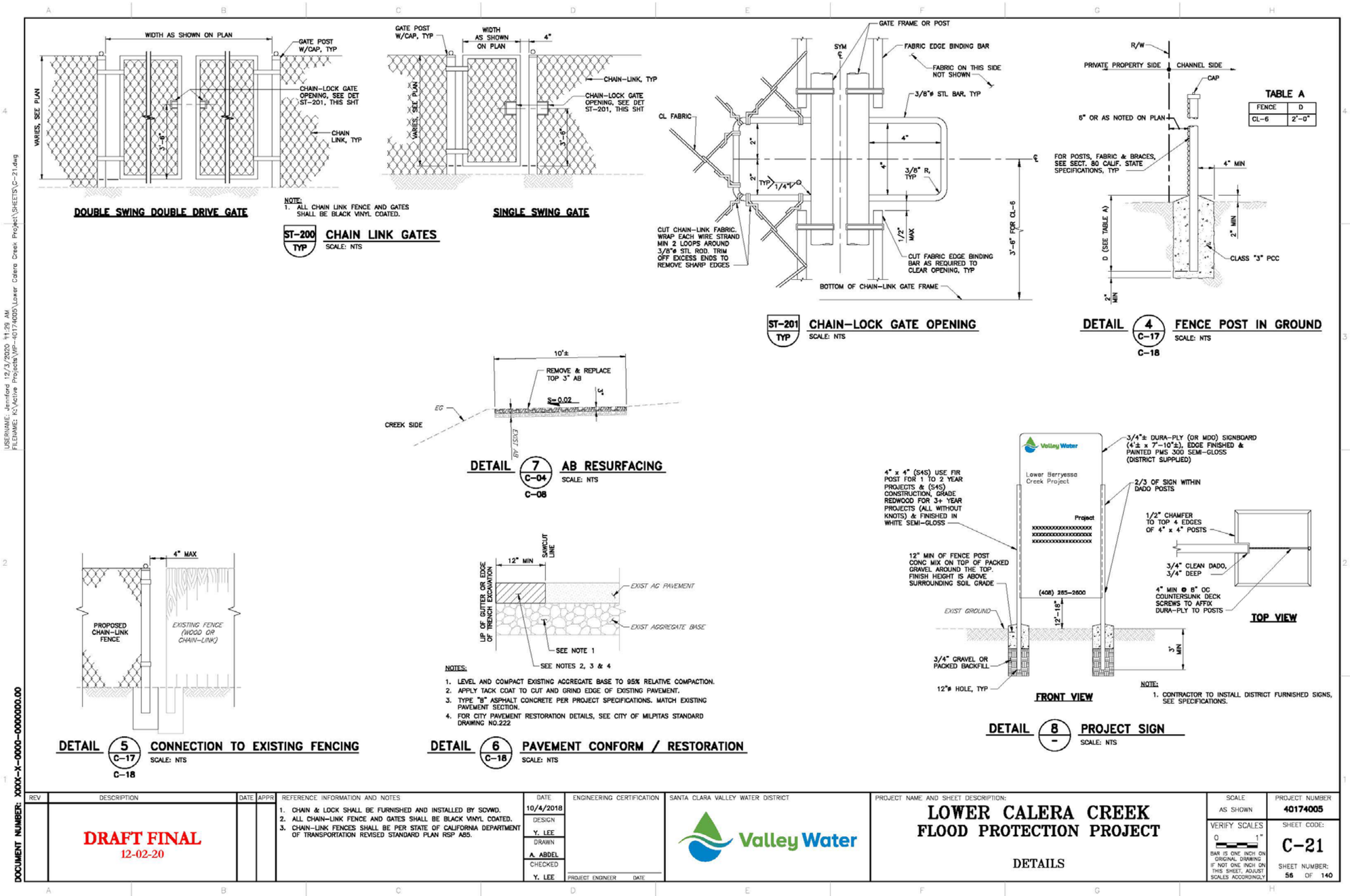
WIDTH AS SHOWN ON PLAN
GATE POST W/CAP, TYP
CHAIN-LOCK GATE OPENING, SEE DET ST-201, THIS SHT
CHAIN LINK, TYP
VARIES, SEE PLAN
DOUBLE SWING DOUBLE DRIVE GATE
NOTE:
1. ALL CHAIN LINK FENCE AND GATES SHALL BE BLACK VINYL COATED.
SINGLE SWING GATE
ST-200 TYP
CHAIN LINK GATES
SCALE: NTS
GATE FRAME OR POST
FABRIC EDGE BINDING BAR
FABRIC ON THIS SIDE NOT SHOWN
3/8"ø STL BAR, TYP
CL FABRIC
3/8" R, TYP
CUT CHAIN-LINK FABRIC. WRAP EACH WIRE STRAND MIN 2 LOOPS AROUND 3/8"ø STL ROD. TRIM OFF EXCESS ENDS TO REMOVE SHARP EDGES
CUT FABRIC EDGE BINDING BAR AS REQUIRED TO CLEAR OPENING, TYP
BOTTOM OF CHAIN-LINK GATE FRAME
3'-6" FOR CL-6
ST-201 TYP
CHAIN-LOCK GATE OPENING
SCALE: NTS
R/W
PRIVATE PROPERTY SIDE
CHANNEL SIDE
CAP
6" OR AS NOTED ON PLAN
FOR POSTS, FABRIC & BRACES, SEE SECT. 80 CALIF. STATE SPECIFICATIONS, TYP
4" MIN
2" MIN
D (SEE TABLE A)
CLASS "3" PCC
TABLE A
FENCE | D
CL-6 | 2'-0"
DETAIL 4 C-17 C-18
FENCE POST IN GROUND
SCALE: NTS
10'±
REMOVE & REPLACE TOP 3" AB
S=0.02
EG
CREEK SIDE
EXIST AB
DETAIL 7 C-04 C-08
AB RESURFACING
SCALE: NTS
4" MAX
PROPOSED CHAIN-LINK FENCE
EXISTING FENCE (WOOD OR CHAIN-LINK)
DETAIL 5 C-17 C-18
CONNECTION TO EXISTING FENCING
SCALE: NTS
12" MIN
SAWCUT LINE
LIP OF GUTTER OR EDGE OF TRENCH EXCAVATION
EXIST AC PAVEMENT
EXIST AGGREGATE BASE
SEE NOTE 1
SEE NOTES 2, 3 & 4
NOTES:
1. LEVEL AND COMPACT EXISTING AGGREGATE BASE TO 95% RELATIVE COMPACTION.
2. APPLY TACK COAT TO CUT AND GRIND EDGE OF EXISTING PAVEMENT.
3. TYPE "B" ASPHALT CONCRETE PER PROJECT SPECIFICATIONS. MATCH EXISTING PAVEMENT SECTION.
4. FOR CITY PAVEMENT RESTORATION DETAILS, SEE CITY OF MILPITAS STANDARD DRAWING NO.222
DETAIL 6 C-18
PAVEMENT CONFORM / RESTORATION
SCALE: NTS
Valley Water
Lower Berryessa Creek Project
Project
(408) 265-2600
3/4"± DURA-PLY (OR MDO) SIGNBOARD (4'± x 7'-10"±), EDGE FINISHED & PAINTED PMS 300 SEMI-GLOSS (DISTRICT SUPPLIED)
2/3 OF SIGN WITHIN DADO POSTS
4" x 4" (S4S) USE FIR POST FOR 1 TO 2 YEAR PROJECTS & (S4S) CONSTRUCTION, GRADE REDWOOD FOR 3+ YEAR PROJECTS (ALL WITHOUT KNOTS) & FINISHED IN WHITE SEMI-GLOSS
12" MIN OF FENCE POST CONC MIX ON TOP OF PACKED GRAVEL AROUND THE TOP. FINISH HEIGHT IS ABOVE SURROUNDING SOIL GRADE
EXIST GROUND
3/4" GRAVEL OR PACKED BACKFILL
12"ø HOLE, TYP
FRONT VIEW
1/2" CHAMFER TO TOP 4 EDGES OF 4" x 4" POSTS
3/4" CLEAN DADO, 3/4" DEEP
4" MIN @ 8" OC COUNTERSUNK DECK SCREWS TO AFFIX DURA-PLY TO POSTS
TOP VIEW
NOTE:
1. CONTRACTOR TO INSTALL DISTRICT FURNISHED SIGNS, SEE SPECIFICATIONS.
DETAIL 8 -
PROJECT SIGN
SCALE: NTS
USERNAME: Jennford 12/3/2020 11:29 AM
FILENAME: K:\Active Projects\MP-40174005\Lower Calera Creek Project\SHEETS\C-21.dwg
DOCUMENT NUMBER: XXXX-X-0000-0000000.00
REV | DESCRIPTION | DATE | APPR
DRAFT FINAL
12-02-20
REFERENCE INFORMATION AND NOTES
1. CHAIN & LOCK SHALL BE FURNISHED AND INSTALLED BY SCVWD.
2. ALL CHAIN-LINK FENCE AND GATES SHALL BE BLACK VINYL COATED.
3. CHAIN-LINK FENCES SHALL BE PER STATE OF CALIFORNIA DEPARTMENT OF TRANSPORTATION REVISED STANDARD PLAN RSP A85.
DATE 10/4/2018
DESIGN Y. LEE
DRAWN A. ABDEL
CHECKED Y. LEE
ENGINEERING CERTIFICATION
PROJECT ENGINEER DATE
SANTA CLARA VALLEY WATER DISTRICT
Valley Water
PROJECT NAME AND SHEET DESCRIPTION:
LOWER CALERA CREEK
FLOOD PROTECTION PROJECT
DETAILS
SCALE AS SHOWN
VERIFY SCALES
BAR IS ONE INCH ON ORIGINAL DRAWING IF NOT ONE INCH ON THIS SHEET, ADJUST SCALES ACCORDINGLY
PROJECT NUMBER 40174005
SHEET CODE: C-21
SHEET NUMBER: 56 OF 140

EXHIBIT D
LCC and LPC Extent of Black Vinyl Fences (continued)

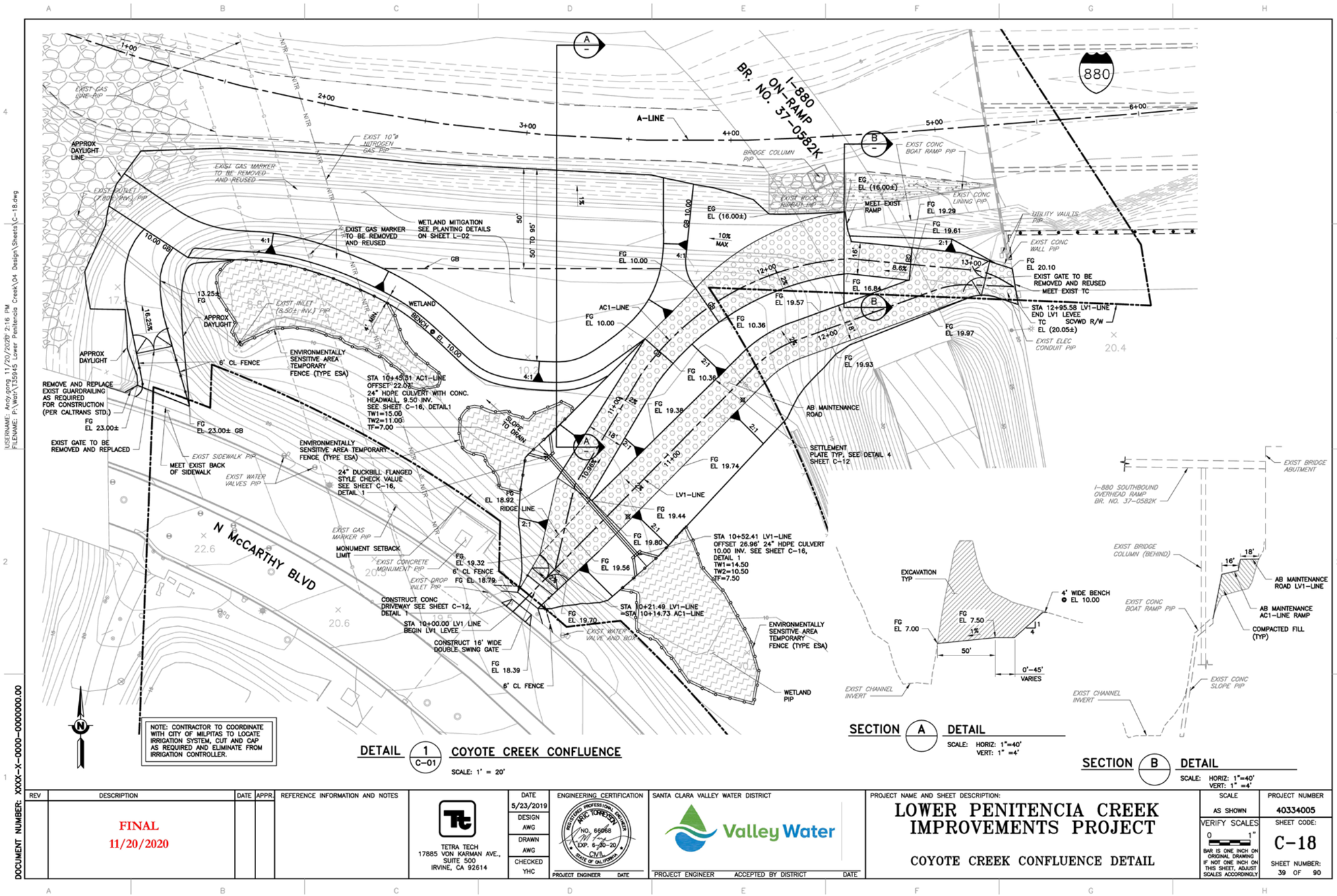

EXHIBIT E
LCC Headwall Structure at North Milpitas Boulevard and Arizona Avenue Bridges

HEADWALL GENERAL NOTES

DESIGN: AASHTO LRFD Bridge Design Specifications, 6th Edition, and Caltrans Amendments, Preface dated November 2014

US Army Corps of Engineers, "Retaining and Flood Walls" EM 1110-2-2502, September 1989

US Army Corps of Engineers, "Strength Design for Reinforced Concrete Hydraulic Structures" EM 1110-2-2104, November 2016

ACI 318-14, Building Code Requirements for Structural Concrete and Commentary, 2014.

HYDROSTATIC LOAD: 62.4 pcf

REINFORCED CONCRETE: f'c = 4,000 psi
fy = 60,000 psi

EXISTING CONCRETE: fy = 40,000 psi
f'c = 5,000 psi (assumed)

FLOODWALL GENERAL NOTES

DESIGN: US Army Corps of Engineers, "Retaining and Flood Walls" EM 1110-2-2502 September 1989
US Army Corps of Engineers, "Strength Design for Reinforced Concrete Hydraulic Structures" EM 1110-2-2104 November 2016

HYDROSTATIC LOAD: 62.4 pcf

SOIL PARAMETERS: γ = 125 pcf (typical)
Undrained condition: ϕ = 0 c = 800 psf
Drained condition: ϕ = 32 c = 0 psf
Soil Bearing Pressure 10,500 psf (ultimate)
Coefficient of friction 0.4 (ultimate)

EARTH LOAD: Active 85 pcf level backfill
Passive 235 pcf

REINFORCED CONCRETE: f'c = 4000 psi
fy = 60,000 psi
γ = 150 pcf (unit weight)

SEISMIC: pga = 0.43g
Load = 13 pcf

CONSTRUCTION LOADING: 2 ft level earth (surcharge)

INDEX TO PLANS

SHEET	TITLE
S-41	GENERAL NOTES
S-42	KEY PLAN
S-43	HEADWALL GENERAL PLAN
S-44	UPRR HEADWALL EXTENSIONS
S-45	HEADWALL DETAILS NO 1
S-46	HEADWALL DETAILS NO 2
S-47	FLOODWALL PLAN NO 1
S-48	FLOODWALL PLAN NO 2
S-49	FLOODWALL PLAN NO 3
S-50	FLOODWALL PLAN NO 4
S-51	FLOODWALL ELEVATION NO 1
S-52	FLOODWALL ELEVATION NO 2
S-53	FLOODWALL ELEVATION NO 3
S-54	FLOODWALL ELEVATION NO 4
S-55	FLOODWALL ELEVATION NO 5
S-56	FLOODWALL ELEVATION NO 6
S-57	FLOODWALL ELEVATION NO 7
S-58	FLOODWALL ELEVATION NO 8
S-59	FLOODWALL DETAILS NO 1
S-60	FLOODWALL DETAILS NO 2

INDEX TO CALTRANS STANDARD PLANS (2015)

A1A	ABBREVIATIONS (SHEET 1 OF 3)
A1B	ABBREVIATIONS (SHEET 2 OF 3)
A1C	ABBREVIATIONS (SHEET 3 OF 3)
A10A	LEGEND LINES AND SYMBOLS (SHEET 1 OF 5)
B0-1	BRIDGE DETAILS
B0-3	BRIDGE DETAILS
B0-13	BRIDGE DETAILS
B3-5	RETAINING WALL DETAILS No. 1

GENERAL NOTES

1. ALL EXISTING FACILITIES, STRUCTURES, TREES, FENCES, LANDSCAPING, ETC., DESIGNATED "EXIST." OR SHOWN EXISTING (DASHED LINES) ARE TO REMAIN. ONLY THOSE SPECIFICALLY DESIGNATED FOR REMOVAL OR DEMOLITION AS SHOWN ON THE CIVIL DRAWINGS, OR AS DIRECTED BY THE ENGINEER MUST BE REMOVED.
2. ALL REFERENCES MADE TO RIGHT OR LEFT AND ALL CROSS-SECTIONS SHOWN ON THE PLANS ARE VIEWED LOOKING UPSTREAM/UPSTATION.
3. LOCATIONS AND DEPTHS OF EXISTING UNDERGROUND UTILITIES AS SHOWN ON THE PLANS ARE BASED ON INFORMATION FROM THE UTILITY AND ARE TO BE CONSIDERED AS APPROXIMATE ONLY.
4. PRIOR TO PERFORMING ANY WORK IN THE VICINITY OF EXISTING UNDERGROUND UTILITIES, THE CONTRACTOR MUST VERIFY THEIR LOCATIONS AND DEPTHS AND TAKE PROPER PRECAUTIONS TO AVOID ANY DAMAGE TO THEM.
5. THE CONTRACTOR VEHICLES SHALL NOT PARK ALONG THE LEVEE ACCESS ROAD AT ANY TIME. AND CONSTRUCTION OPERATIONS MUST BE CONDUCTED IN SUCH A MANNER AS TO CAUSE AS LITTLE INCONVENIENCE AS POSSIBLE TO THE RESIDENTS.
6. THE CONTRACTOR MUST INSTALL TEMPORARY FENCES AND OTHER WARNING SIGNS OR DEVICES PER SPECIFICATIONS.
7. SEE SPECIFICATIONS FOR THE RELEVANT GEOTECHNICAL DATA AND SOILS OF BORINGS.
8. IN CURVED SEGMENTS, TRANSVERSE REINFORCEMENT MUST BE PLACED RADIAL TO THE WALL LAYOUT LINE WITH THE SPACING TO BE APPLIED AT THE OUTSIDE OF THE CURVE UNLESS NOTED OTHERWISE ON THE DRAWINGS.
9. CONTRACTOR MUST FIELD VERIFY ALL LAYOUTS, EXISTING CONSTRUCTION AND CONTROLLING FIELD DIMENSIONS PRIOR TO ORDERING OR FABRICATING ANY MATERIALS.
10. SEE CIVIL AND GENERAL SHEETS FOR ADDITIONAL INFORMATION NOT NOTED ON PLANS.

LEGEND:

B0-13 / 15-4 — INDICATES STATE OF CALIFORNIA STANDARD PLAN SHEET NUMBER

INDICATES EXISTING STRUCTURE

INDICATES STRUCTURE REMOVAL (PORTION)

USERNAME: SM4 FRI 18 Dec 2020 01:13pm
FILENAME: W:\2016\3016135\Task_01 & 02-Lower_Calera_CK\20181335541

DOCUMENT NUMBER: CAE_CY-S-4018-66001

REV	DESCRIPTION	DATE	APPR	REFERENCE INFORMATION AND NOTES

BIGGS CARDOSA ASSOCIATES INC
STRUCTURAL ENGINEERS
BCA
865 The Alameda
San Jose, California 95126
408-296-5515

DATE 11/1/19
DESIGN G. TOLAN
DRAWN D. MANCINI
CHECKED D. DEVLIN

ENGINEERING CERTIFICATION
PROJECT ENGINEER DATE 11/1/19

SANTA CLARA VALLEY WATER DISTRICT
Valley Water
PROJECT ENGINEER DATE 12/30/20

PROJECT NAME AND SHEET DESCRIPTION:
LOWER CALERA CREEK FLOOD PROTECTION PROJECT
GENERAL NOTES

SCALE AS SHOWN
VERIFY SCALES 0 1"
BAR IS ONE INCH ON ORIGINAL DRAWING. IF NOT ONE INCH ON THIS SHEET, ADJUST SCALES ACCORDINGLY

PROJECT NUMBER 40174005
SHEET CODE: S-41
PAGE NUMBER: 95 OF 140

EXHIBIT E
LCC Headwall Structure at North Milpitas Boulevard and Arizona Avenue Bridges (continued)

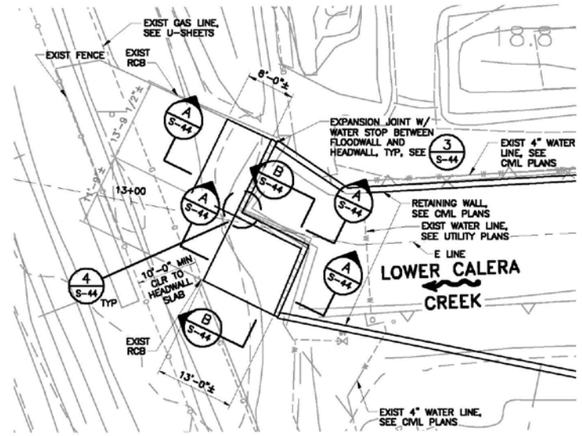

VTA/BART UPSTREAM HEADWALL

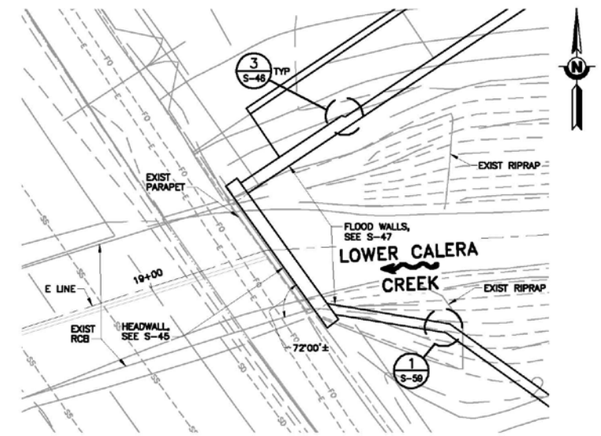

N MILPITAS UPSTREAM HEADWALL

PLAN
SCALE: 1" = 10'

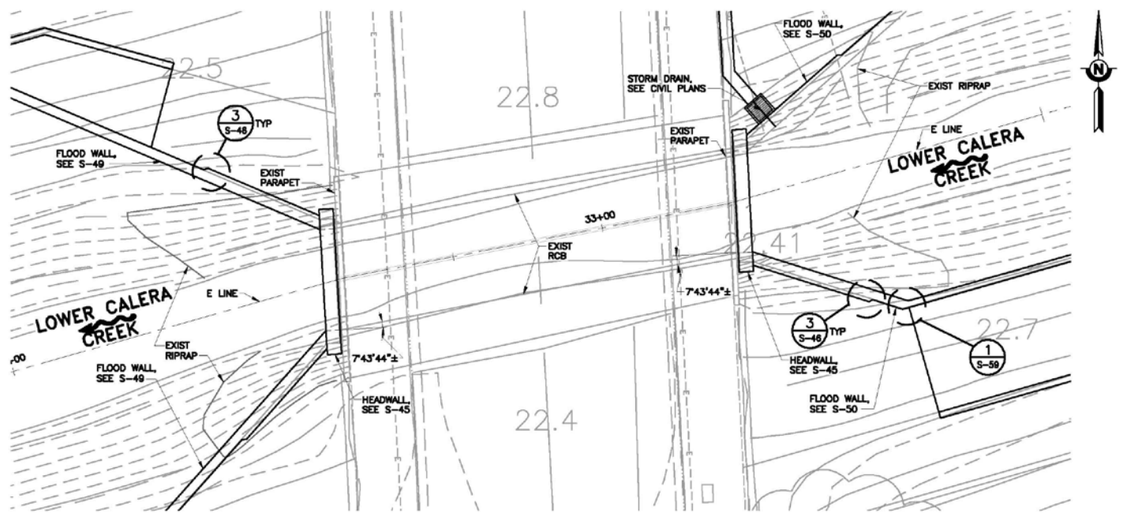

ARIZONA DOWNSTREAM HEADWALL

PLAN
SCALE: 1" = 10'

ARIZONA UPSTREAM HEADWALL

NOTE:
1. SEE CIVIL PLANS FOR ROCK SLOPE PROTECTION EXTENTS AND DETAILS.
2. WORK SHALL BE STAGED SO THAT ONLY ONE SIDEWALK ALONG ARIZONA AVE OR NORTH MILPITAS BLVD SHALL BE CLOSED AT ANY TIME.

REV	DESCRIPTION	DATE	APPR.	REFERENCE INFORMATION AND NOTES

BIGGS CARDOSA ASSOCIATES INC
STRUCTURAL ENGINEERS
BCA
565 The Alameda
San Jose, California 95126
408-286-8515

DATE 12/18/20
DESIGN G. TOLAN
DRAWN D. MANCINI
CHECKED D. DEVLIN

ENGINEERING CERTIFICATION
PROJECT ENGINEER DATE 12/18/20

SANTA CLARA VALLEY WATER DISTRICT
Valley Water
PROJECT ENGINEER DATE 12/30/20

PROJECT NAME AND SHEET DESCRIPTION:
LOWER CALERA CREEK
FLOOD PROTECTION PROJECT
HEADWALL GENERAL PLAN

SCALE: AS SHOWN
VERIFY SCALES 0 1"
BAR IS ONE INCH ON ORIGINAL DRAWING IF NOT ONE INCH ON THIS SHEET, ADJUST SCALES ACCORDINGLY

PROJECT NUMBER: 40174005
SHEET CODE: S-43
PAGE NUMBER: 98 OF 140

DOCUMENT NUMBER: CAE_CY-S-4018-66003
USERNAME: SMH FRI 18 Dec 2020 11:37am

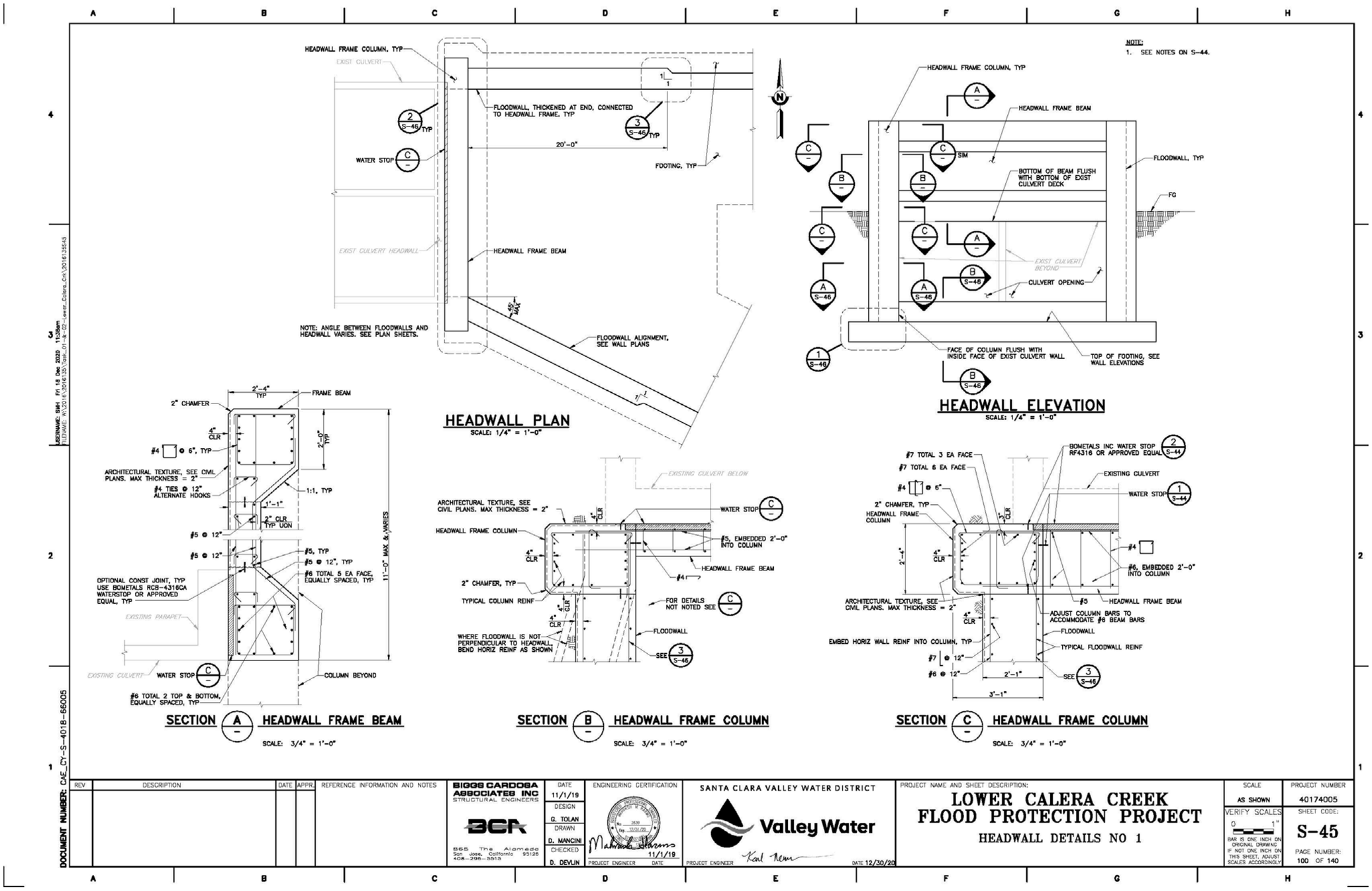
HEADWALL PLAN
SCALE: 1/4" = 1'-0"
HEADWALL ELEVATION
SCALE: 1/4" = 1'-0"
SECTION A HEADWALL FRAME BEAM
SCALE: 3/4" = 1'-0"
SECTION B HEADWALL FRAME COLUMN
SCALE: 3/4" = 1'-0"
SECTION C HEADWALL FRAME COLUMN
SCALE: 3/4" = 1'-0"
NOTE:
1. SEE NOTES ON S-44.
HEADWALL FRAME COLUMN, TYP
FLOODWALL, THICKENED AT END, CONNECTED TO HEADWALL FRAME, TYP
WATER STOP
FOOTING, TYP
HEADWALL FRAME BEAM
NOTE: ANGLE BETWEEN FLOODWALLS AND HEADWALL VARIES. SEE PLAN SHEETS.
FLOODWALL ALIGNMENT, SEE WALL PLANS
BOTTOM OF BEAM FLUSH WITH BOTTOM OF EXIST CULVERT DECK
FLOODWALL, TYP
FG
EXIST CULVERT BEYOND
CULVERT OPENING
FACE OF COLUMN FLUSH WITH INSIDE FACE OF EXIST CULVERT WALL
TOP OF FOOTING, SEE WALL ELEVATIONS
FRAME BEAM
2" CHAMFER
ARCHITECTURAL TEXTURE, SEE CIVIL PLANS. MAX THICKNESS = 2"
#4 TIES @ 12" ALTERNATE HOOKS
OPTIONAL CONST JOINT, TYP USE BOMETALS RCB-4316CA WATERSTOP OR APPROVED EQUAL, TYP
EXISTING PARAPET
EXISTING CULVERT
COLUMN BEYOND
#6 TOTAL 2 TOP & BOTTOM, EQUALLY SPACED, TYP
#6 TOTAL 5 EA FACE, EQUALLY SPACED, TYP
11'-0" MAX. & VARIES
EXISTING CULVERT BELOW
HEADWALL FRAME COLUMN
TYPICAL COLUMN REINF
WHERE FLOODWALL IS NOT PERPENDICULAR TO HEADWALL BEND HORIZ REINF AS SHOWN
FLOODWALL
#7 TOTAL 3 EA FACE
#7 TOTAL 6 EA FACE
BOMETALS INC WATER STOP RF4316 OR APPROVED EQUAL
EXISTING CULVERT
ADJUST COLUMN BARS TO ACCOMMODATE #6 BEAM BARS
EMBED HORIZ WALL REINF INTO COLUMN, TYP
TYPICAL FLOODWALL REINF
DOCUMENT NUMBER: CAE_CY-S-4018-66005
REV
DESCRIPTION
DATE
APPR.
REFERENCE INFORMATION AND NOTES
BIGGS CARDOSA ASSOCIATES INC
STRUCTURAL ENGINEERS
BCA
865 The Alameda
San Jose, California 95126
408-296-3513
DATE 11/1/19
DESIGN G. TOLAN
DRAWN D. MANCINI
CHECKED D. DEVLIN
ENGINEERING CERTIFICATION
PROJECT ENGINEER
DATE 11/1/19
SANTA CLARA VALLEY WATER DISTRICT
Valley Water
PROJECT ENGINEER
DATE 12/30/20
PROJECT NAME AND SHEET DESCRIPTION:
LOWER CALERA CREEK
FLOOD PROTECTION PROJECT
HEADWALL DETAILS NO 1
SCALE
AS SHOWN
VERIFY SCALES
BAR IS ONE INCH ON ORIGINAL DRAWING IF NOT ONE INCH ON THIS SHEET, ADJUST SCALES ACCORDINGLY
PROJECT NUMBER
40174005
SHEET CODE:
S-45
PAGE NUMBER:
100 OF 140

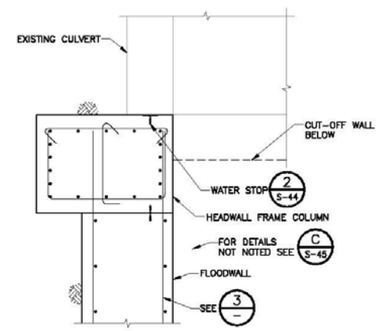

SECTION A S-45 HEADWALL FRAME COLUMN

SCALE: 3/4" = 1'-0"

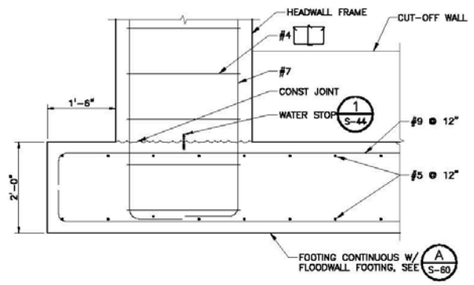

DETAIL 1 S-45 HEADWALL FRAME FOOTING

SCALE: 3/4" = 1'-0"

NOTES:
1. SEE NOTES ON S-44.

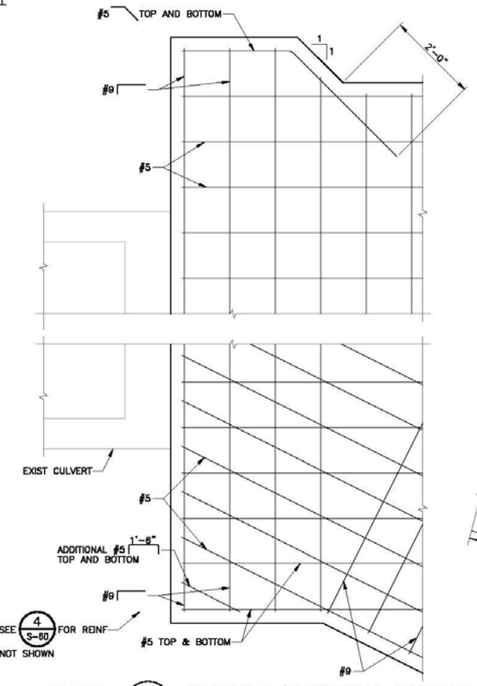

DETAIL 2 S-45 HEADWALL/FLOODWALL FOOTING

SCALE: 3/4" = 1'-0"

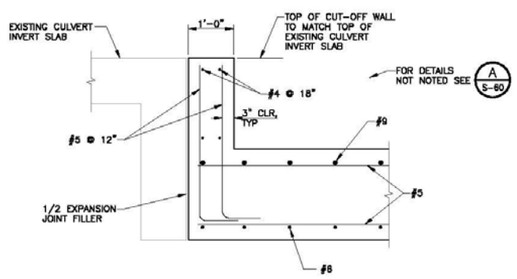

SECTION B S-45 CUTOFF WALL

SCALE: 3/4" = 1'-0"

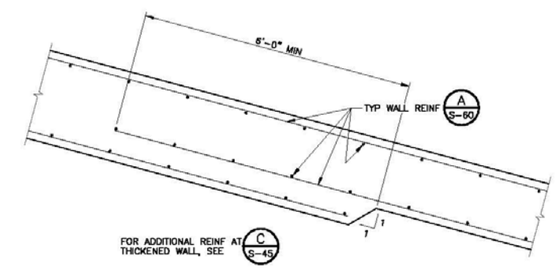

DETAIL 3 S-43 S-45 THICKENED WALL TRANSITION

SCALE: 3/4" = 1'-0"

DOCUMENT NUMBER: CAE_CY-S-4018-66006

REV	DESCRIPTION	DATE	APPR	REFERENCE INFORMATION AND NOTES

BIGGS CARDOSA ASSOCIATES INC
STRUCTURAL ENGINEERS
BCA
865 The Alameda
San Jose, California 95126
408-296-8515

DATE 11/1/19
DESIGN G. TOLAN
DRAWN D. MANCINI
CHECKED D. DEVLIN

ENGINEERING CERTIFICATION
PROJECT ENGINEER 11/1/19 DATE

SANTA CLARA VALLEY WATER DISTRICT
Valley Water
PROJECT ENGINEER DATE 12/30/20

PROJECT NAME AND SHEET DESCRIPTION:
LOWER CALERA CREEK FLOOD PROTECTION PROJECT
HEADWALL DETAILS NO 2

SCALE: AS SHOWN
VERIFY SCALES: 0 1"
BAR IS ONE INCH ON ORIGINAL DRAWING IF NOT ONE INCH ON THIS SHEET, ADJUST SCALES ACCORDINGLY

PROJECT NUMBER: 40174005
SHEET CODE: S-46
PAGE NUMBER: 101 OF 140

EXHIBIT F
Estimated Cost of City Improvement Work and Payment to Valley Water

Lower Berryessa Creek (LBC) Costs		
Item No.	Description of Item	Cost
1	Pedestrian Bridge Design	$73,500
2	Construction Management	$67,000
3	Storm Drain Outfall Modifications	$30,000
4	Berryessa Pump Station Outfall Pipe Modifications	$140,000
5	Aspahlt Concrete Pedestrian Path (N. Milpitas Blvd to Pedestrian Bridge)	$96,700
6	Raised Pedestrian Bridge	$120,000
7	Retaining Walls at Pedestrian Bridge	$180,000
8	Pedestrian Ramps (AC and PCC)	$105,000
9	Guardrailing/Handrailing Pedestrian Ramps	$275,500
	Total LBC Costs	$1,087,700
	Credit for UBC landscape damages	<$41,125>
	Final Payment per Section 5.h.	**$1,046,575**

Lower Penitencia Creek (LPC) Costs		
Item No.	Description of Item	Cost
1	Demolition/Disposal of City Trail	$70,000
2	New Asphalt Pavement City Pedestrian Trail	$70,000
3	Concrete Paved City Pedestrian Trial	$72,000
4	Installtion of duckbill check valves for storm drain outfalls at the California Circle and Abott Ave pump stations and storm drain outfalls located upstream of Interstate 880	$80,000
	Subtotal LPC Costs	**$292,000**
	15% Contingency Costs	**$43,800**
	Total LPC Costs	**$335,800**
	10% Initial Payment per Section 5.g.	$33,580
	80% Payment per Section 5.g.	$268,640
	10% Final Payment per Section 5.g.	$33,580

Lower Calera Creek (LCC) Costs		
Item No.	Description of Item	Cost
1	Modify four (4) existing storm drain outfalls and install check valves	$19,200
2	Additional Asphalt Concrete Trail at LBC	$227,000
	Subtotal LCC Costs	**$246,200**
	15% Contingency Costs	**$36,930**
	Total LCC Costs	**$283,130**
	10% Initial Payment per Section 5.h.	$28,315
	80% Payment per Section 5.h.	$226,500
	10% Final Payment per Section 5.h.	$28,315

EXHIBIT G
LCC and LPC List of City Improvement Work

Lower Calera Creek (LCC) Project

1. Modify two existing 15-inch and 18-inch storm drain outfalls, located between N. Milpitas Blvd and the railroad crossing, including either duckbill or flap gate check valves

2. Extend two existing 18-inch and 36-inch storm drain outfalls, located upstream of Arizona Ave, including either duckbill or flap gate check valves

3. Install approximately 4,050 feet of new asphalt pavement pedestrian trail overlain the existing levee maintenance road along Lower Berryessa Creek, Phase 2 between Calaveras Blvd and Abel St.

Lower Penitencia Creek (LPC) Project

1. Remove and replace three existing 28-inch storm drain outfalls at the California Circle Pump Station with new 36-inch outfalls equipped with duckbill check valves

2. Remove and replace two existing 18-inch storm drain outfalls at the Abbot Ave Pump Station with new 24-inch outfalls equipped with duckbill check valves

3. Modify existing 24-inch storm drain outfall, located between Interstate 880 and California Circle, including duckbill check valve

4. Remove and replace the existing City trail and existing irrigation adjacent to the trail within in-kind surface material and irrigation

Santa Clara Valley Water District

File No.: 21-0109

Agenda Date: 1/26/2021
Item No.: *6.2.

SUPPLEMENTAL BOARD AGENDA MEMORANDUM

SUBJECT:
Authorize the Chief Executive Officer to Execute the Master Agreement With the City of Milpitas for the Removal and Construction of City Improvements, Modifications to City Facilities, and Work Within City's Right of Way Included in the Lower Berryessa Creek Flood Protection, Lower Calera Creek Flood Protection, and Lower Penitencia Creek Improvements Projects (Project Nos. 40174005 and 40334005) for a Fee of $1,665,505 (Milpitas) (District 3).

REASON FOR SUPPLEMENTAL MEMORANDUM:
This supplemental memorandum provides the final Master Agreement for the Removal and Construction of City Improvements, Modifications to City Facilities, and Work Within City's Right of Way Included in the Valley Water Lower Berryessa Creek Flood Protection Project, Lower Calera Creek Flood Protection Project, and Lower Penitencia Creek Improvements Project (Master Agreement) with the City of Milpitas finalized after the initial Board Agenda Memorandum was published. This update conveys additional information received after the initial report was released, consistent with Executive Limitations Policy EL-7-10-5.

RECOMMENDATION:
Authorize the Chief Executive Officer to Execute the Master Agreement With the City of Milpitas for the Removal and Construction of City Improvements, Modifications to City Facilities, and Work Within City's Right of Way Included in the Lower Berryessa Creek Flood Protection, Lower Calera Creek Flood Protection, and Lower Penitencia Creek Improvements Projects for a Fee of $1,665,505 (Milpitas) (District 3).

SUMMARY:
The Lower Penitencia Creek Construction Plans, plan sheets C-02 and C-19 in Exhibit C of the Master Agreement, were revised after publication of the initial Board Agenda Memorandum. The final Master Agreement with revised Exhibit C is included with this Supplemental Memorandum as Attachment 1.

FINANCIAL IMPACT:
No Changes.

CEQA:
No Changes.

ATTACHMENTS:
*Supplemental Attachment 1: Master Agreement

UNCLASSIFIED MANAGER:
Rechelle Blank, 408-630-2615

City Agreement No.: Valley Water Agreement No.:

Encroachment Permit No(s):

SANTA CLARA VALLEY WATER DISTRICT

MASTER AGREEMENT FOR THE REMOVAL & CONSTRUCTION OF CITY IMPROVEMENTS, MODIFICATION TO CITY FACILITIES AND WORK WITHIN CITY'S RIGHT OF WAY INCLUDED IN THE VALLEY WATER LOWER BERRYESSA CREEK FLOOD PROTECTION PROJECT, LOWER CALERA CREEK FLOOD PROTECTION PROJECT AND LOWER PENITENCIA CREEK IMPROVEMENTS PROJECT

This Agreement for the Removal & Construction of City Improvements, Modification to City Facilities and Work within the City's Right of Way ("Agreement") is entered into by the City of Milpitas, a municipal corporation ("City"), and Santa Clara Valley Water District, a special district created by the California Legislature ("Valley Water"), on 2021, ("Agreement Effective Date"), and the parties agree to the terms and conditions as set forth herein.

RECITALS

A. WHEREAS, Valley Water as owner of certain waterways within the City desires to construct significant flood protection improvements along Lower Berryessa Creek ("LBC"), Lower Calera Creek ("LCC") and Lower Penitencia Creek ("LPC") within the City of Milpitas. Such work shall include approximately 8,700 feet of channel from LBC's confluence with LPC upstream to Calaveras Boulevard, and approximately 2,830 feet of channel from the Union Pacific Railroad up to about 880 feet upstream of Arizona Avenue on LCC. Work will also extend approximately 1-mile from Coyote Creek confluence to just downstream of San Andreas Drive on LPC. Such works are collectively referred to herein as the "Lower Berryessa Creek Flood Protection Project" ("LBC Project"), the "Lower Calera Creek Flood Protection Project" ("LCC Project") and the "Lower Penitencia Creek Improvements Project ("LPC Project"). The LBC Project, LCC Project and LPC Project are separate projects and each will have their own contractor and project schedules. Valley Water will manage the projects during the design and construction phases including hiring contractors and construction administration;

B. WHEREAS, the LBC Project and LCC Project will provide 100-year flood protection for homes, schools, and businesses in Milpitas and LPC Project will maintain the existing Federal Emergency Management Agency (FEMA) accreditation along the east levee located between California Circle and Berryessa Creek;

C. WHEREAS the City currently owns and maintains the California Circle storm pump station, Abbott Avenue storm pump station, and Jurgens storm pump station;

D. WHEREAS the City owns and maintains their public storm drain outfalls located on Valley Water-owned lands and subject to Valley Water encroachment permits along all three creeks;

E. WHEREAS, City is the owner of the public street right-of-way and vehicular bridges, and is the owner of certain pedestrian bridges and pedestrian trails on Valley Water-owned lands within the LBC, LCC, and LPC Project limits;

F. WHEREAS, the City currently owns and maintains certain recreational improvements on Valley Water-owned lands along Berryessa Creek;

G. WHEREAS, Valley Water and City agreed to the maintenance, repair, replacement, and use obligations of City-owned recreational improvements along LBC located on Valley Water property within the City of Milpitas ("Valley Water Property") as described in a Joint Use Agreement entered into by the parties on September 4, 2002, attached hereto as Exhibit A ("LBC Trail Agreement");

H. WHEREAS, more specifically, City has a contractual obligation under Section 4(a) of the LBC Trail Agreement to compensate Valley Water for costs to remove or replace its City-owned recreational improvements located on Valley Water Property in the event Valley Water requires such removal or replacement in order to improve, maintain, or repair Berryessa Creek in any manner for Valley Water purposes;

I. WHEREAS, to facilitate the LBC Project, Valley Water has undertaken the planning, design, construction, and construction management necessary to remove and replace the City-owned recreational improvements affected by the LBC Project;

J. WHEREAS, as described in Section 4(b) of the LBC Trail Agreement, the removal and replacement of the City owned pedestrian bridge and trail is required to complete the LBC Project;

K. WHEREAS, an existing City trail, landscaping, and other recreational improvements were permitted and constructed in January 7th, 1997 on Valley Water-owned land along Lower Penitencia Creek (Lease Agreement Joint Use, SCVWD Agreement No. A2001 ("LPC Trail Agreement"), attached hereto as Exhibit B;

L. WHEREAS, City agreed to the maintenance, repair, replacement, and use obligations of the aforementioned City-owned recreational improvements located on Valley Water property ("Valley Water Property") as described in the LPC Trail Agreement;

M. WHEREAS, City has a contractual obligation under Section 6(b) of the LPC Trail Agreement to compensate Valley Water for costs to remove or replace its City-owned recreational improvements located on Valley Water Property in the event Valley Water requires such removal or replacement in order to improve, maintain, or repair Lower Penitencia Creek in any manner for Valley Water purposes;

N. WHEREAS, the City has an interest in, maintaining a portion of the City's recreational trail between California Circle and Cascadita Terrace on the east levee and from Milmont Drive to downstream of San Andreas Drive on the west levee, where it does not unreasonably interfere with the primary use of the property to carry out Valley Water's mission of flood protection, water resource management, and stream stewardship;

O. WHEREAS, the City has desire in, constructing duckbill check valves at all of their public storm drain and pump station outfalls located within the LCC and LPC Project limits, where it does not unreasonably interfere with the primary use of the property to carry out

Valley Water's mission of flood protection, water resource management, and stream stewardship;

P. WHEREAS the City currently owns and maintains vehicular bridges crossing Valley Water easements along North Milpitas Boulevard, Arizona Avenue, California Circle, and Milmont Drive;

Q. WHEREAS, the City has an interest in removing blight and in enhancing the appearance of Valley Water infrastructure along City right of way;

R. WHEREAS, the City has requested that Valley Water undertake certain "betterments", which are project elements that Valley Water determines exceeds the application of standards that would otherwise apply to the construction of that element. The project elements that Valley Water has determined are a betterment, include, but are not limited to: upsize of storm drain outfalls; replacement of concrete curb, gutter and sidewalk beyond the limits required for Valley Water to complete its work in accordance with City standards; asphalt pavement replacement along the City's public trail beyond limits required for Valley Water to complete its work, and installation of duckbill check valves at City's storm drain outfalls; and

S. WHEREAS, Valley Water and City wish to enter into this Agreement to outline respective party obligations for the removal, replacement, reconstruction or alteration of existing City Improvements within the LBC, LCC and LPC Projects (collectively, the "City Improvement Work" and reimbursement of any funds from the City to Valley Water for any and all costs incurred by Valley Water for undertaking such construction on behalf of the City.

T. NOW, THEREFORE the parties hereto agree as follows:

1. Incorporation of Recitals

The recitals set forth above are incorporated herein by this reference.

2. California Environmental Quality Act (CEQA)

a. Valley Water is the project owner for the LBC, LCC and LPC Projects and Lead Agency as described by the California Environmental Quality Act (CEQA). An Environmental Impact Report (EIR) was prepared and adopted by the District for the LBC Project on December 13, 2011. An EIR for the LCC Project was certified by the Valley Water Board of Directors in December 2011, and an addendum to the EIR was approved by the Valley Water CEO on November 19, 2018. The LPC Project EIR was certified by the Valley Water Board of Directors on November 28, 2017.

b. City has acted as the Lead Agency and project proponent for the City Improvement Work as described by CEQA.

(REMAINDER OF PAGE INTENTIONALLY LEFT BLANK)

3. Scope of Work

a. For the LBC Project, Valley Water will perform three different elements (described under paragraphs 3.a.(1– 3) during construction of the LBC Project as part of this Agreement.

(1) City Improvement Work: (i) storm drain outfall modifications; (ii) Berryessa Pump Station discharge pipe modification; (iii) asphalt concrete pedestrian trail improvement of Valley Water maintenance road; (iv) raised City owned pedestrian bridge; (v) retaining walls at pedestrian ramps; (vi) asphalt concrete pedestrian ramps; and (vii) concrete pedestrian ramp structure. Work shall be completed at City cost.

(2) City Storm Drain Outfall Replacement & Flap Gate Installation: Valley Water has designed and installed replacements of City storm drain outfalls and flap gates along the LBC Project. For the purposes of this Agreement, the replacement of outfalls shall be defined as the functional replacement with flap gates necessary to conform to the proposed channel geometry. Work shall be completed at City cost.

(3) Additional Levee Repair Work in 2019: City understands Valley Water contractors removed and replaced levees along Lower Berryessa Creek in 2019 to correct deficiencies from this project. The additional levee repairs occurred on Lower Berryessa Creek from May to December 2019 and included removal of City recreational trail facilities including asphalt surfaces recently installed by Valley Water from North Milpitas Boulevard east to the City's pedestrian bridge structure. Valley Water agrees to replace these asphalt trail surfaces in-kind at the conclusion of the levee work at City cost.

(4) Valley Water agrees to complete asphalt trail surfaces from Abel Street to North Milpitas Boulevard, and from the City's pedestrian bridge structure to Calaveras Boulevard. City and Valley Water agree that the asphalt trail work will be completed during construction of the LCC project at City cost.

(5) Valley Water will replace existing fencing and gates along City streets and trails with black vinyl fencing. City performed a final walk at the completion of construction and issued a punch list to replace the existing fencing and gates to Valley Water in January 2020. Valley Water shall make the punch list corrections agreed to by Valley Water and City. Replacement fence work shall be completed at Valley Water cost.

b. For the LCC Project, Valley Water will:

(1) Construct standalone headwalls adjacent to North Milpitas Boulevard and Arizona Avenue in accordance with Section 3.f, including the removal and replacement of City curb, gutter,

sidewalk, and driveway aprons to the limits required for Valley Water to complete its work and in compliance with City Standards.

(2) Valley Water will modify two (2) existing 15-inch and 18-inch storm drain outfalls and install two (2) new 18-inch and 36-inch outfall pipe extensions equipped with duckbill or flapgate check valves at City's cost.

(3) Valley Water shall perform work in accord with the set of plans that are approved by the City prior to advertisement, bid, and award of a construction contract by Valley Water. Valley Water shall perform work in accord with city encroachment permit conditions and requirements, and applicable local and state regulations and statutes for Valley Water work within the City right of way. Valley Water shall provide the City with a reasonable schedule of the intended work. City shall complete permit review and approval within 6 weeks of receipt of permit application to further the timely completion of the construction schedule.

c. For the LPC Project, Valley Water will:

(1) Construct City Improvement Work, at City's cost, including:

(a) remove and replace three (3) existing 28-inch outfalls at California Circle Pump Station with new 36-inch outfalls equipped with duckbill check valves;

(b) remove and replace two (2) existing 18-inch outfalls at Abbot Avenue Pump Station with 24-inch outfalls equipped with duckbill check valves;

(c) Modify the existing 24-inch storm drain outfall, located between Interstate 880 and California Circle, equipped with duckbill check valve;

(d) remove and replace the existing City trail and existing irrigation adjacent to the trail with in-kind surface material and irrigation, as shown in Exhibit B.

(2) Valley Water shall construct a new access road for California Circle Pump Station, within City right of way at Valley Water cost.

(3) Valley Water shall perform work in accordance with City approved plans, Encroachment Permit conditions and requirements, and all applicable local and state regulations and statutes for Valley Water work within City right of way. Valley Water shall provide the City with a reasonable schedule of the intended work.

(4) If a water shut down is required, Valley Water agrees to complete this work at night or on weekends if requested by the City to minimize outages and impacts to City residents and businesses.

(5) LPC City Recreational Improvements Subject to The LPC Trail Agreement. All recreational improvements resulting from the LPC City Improvement Work are deemed “improvements” as that term is defined in Section 1(c) of the LPC Trail Agreement. Hence, the terms and conditions contained in the LPC Trail Agreement shall dictate the parties’ obligations with respect to the recreational improvements resulting from the LPC Projects.

(6) The City and Valley Water each desire to purchase real property and right of way from each other for the completion of their respective Capital Projects. City right of way includes Assessor’s Parcel Number (APN) 022-30-042, 022-30-041, 022-37-000, and 022-37-002 that Valley Water desires for the LPC Project. Valley Water right of way includes APN 086-37-018 that the City desires to acquire an easement from Valley Water for installation of a vehicular crossing over Penitencia East Channel. Both agencies agree to consider the transfers of right of way and will work cooperatively in the completion of the purchase agreements that will include both transactions. The City and Valley Water will present the proposed transfers of right of way to their respective elected body, council, or Board of Directors for consideration and approval within 6 months of execution of this Agreement. Neither agency’s proposed transfer of right of way shall be conditioned on the other agency’s proposed transfer of right of way.

It is understood Valley Water and City may require possession of owned parcels prior to agency approvals of the purchase agreement. The City and Valley Water agree to issue Permits for their projects within each agency respective right of way. The City’s Encroachment Permit for the LPC project will include the City’s conditional approval to construct Valley Water improvements upon City owned land pending completion of the land transfer purchase agreement.

d. Per Valley Water’s Coyote Watershed Aesthetic guidelines, the LCC and LPC Projects design shall incorporate black vinyl coated fencing and gates along the City’s street frontage at all intersections, and portions of trails within Valley Water maintenance access roads and Lower Calera Creek and Lower Penitencia Creek facilities where shown in Exhibit D. The black vinyl fencing will be provided at no cost to City and upon issuance of a Notice of Completion by Valley Water shall own and be maintained in kind by Valley Water. At the conclusion of construction, Valley Water staff shall coordinate to meet with City staff for the installation of City pad locks to be daisy chained with Valley Water locks at maintenance road gates.

e. City standard concrete or asphalt pavement driveway aprons shall be installed as part of the LCC and LPC Projects at all intersections of Valley Water maintenance access roads and City streets. Aprons will extend from City street to Valley Water maintenance gates.

f. As part of the LCC Project, it is necessary for Valley Water to construct, operate and maintain two (2) new standalone headwall structures ("Structure" - see Exhibit E), adjacent to but not attached or bearing against the City's North Milpitas Boulevard and Arizona Avenue Bridges (herein referred to as "Bridges") for the purpose of flood protection during a 100-year event. Valley Water shall not attach new headwall structures to City bridge structures. Damage to Valley Water's structure arising from future major repairs or improvements of the City's bridge shall not be the responsibility of the City except to the extent such damage is caused by the City's or its contractor's active negligence or willful misconduct. All improvements constructed adjacent to City roadways shall comply with City standard vehicle sight distance requirements as determined by the City Engineer in accordance with Section 3.b.(3) above. Work shall be completed at Valley Water cost.

g. Community Outreach. Valley Water shall provide project outreach to the City of Milpitas community along the length of the LCC and LPC Projects prior to the start of construction. Methods of outreach acceptable to the City include notices with social media platforms, Construction Notices mailed to residents and business along the LCC and LPC Projects, and community meetings. Community outreach methods shall be provided, and proof of such outreach shall be provided to the City. Valley Water shall provide Community Outreach through dissemination of Notices of Construction to residents adjacent to the project at least 30 calendar days prior to the start of work. Valley Water shall disseminate a second construction notice approximately two-weeks prior to the start of construction. Valley Water's Deputy Operating Officer shall coordinate with the City and provide a presentation to the City Council at least one month prior to the start of construction.

h. Valley Water shall maintain all newly installed floodwalls and retaining walls in a clean maintained appearance including graffiti removal.

4. City Design Review, Approval, and Construction Inspection

a. City's Review and Approval of Valley Water's Design Plans and Encroachment Permit Application

(1) Waiver of Permit, Land Use, Staff Review, and Construction Inspection Fees. In accordance with the "First Amendment to the Memorandum of Understanding (MOU) between Valley Water and the City of Milpitas for Waiver of Permit, Land Use, Staff Review, and Construction Inspection Fees," any fees by Valley Water and City for design review, permits, and construction inspection shall be waived for Designated Projects. Both the LCC and LPC Projects are designated projects listed in Exhibit B of the MOU, Items 2 and 3.

(2) City Improvement Design Review: City shall review each set of project plans and specifications presented by Valley Water within the time specified by this agreement for City review. City's design review is limited to City Improvements to be installed and will

include conformance with City Standards and public safety. The City will provide written approval of the City Improvement Design as shown on the project plans and specifications. The City shall complete its design review prior to Valley Water's Board adoption of plans and specifications.

(3) Encroachment Permit. Prior to starting LCC and LPC Project construction, or any work within City right of way, Valley Water shall obtain a City Encroachment Permit that shall be signed by Valley Water and its Contractor. City agrees that the permit term shall be effective until the Project is complete and accepted by Valley Water. Valley Water's contractor(s) shall provide copies of their Liability Insurance documents naming the City and its officers as additional insured and shall provide a Faithful Performance Bond naming the City of Milpitas as a co-obligee or dual obligee for the full value of the project.

(4) City Inspection. Valley Water shall ensure that all work completed by its Contractor(s) within City right of way or upon City owned infrastructure shall be inspected by the City's Public Works Construction Inspector to ensure the Contractor(s) performance according to the approved plans. Valley Water and the City agree to coordinate inspections such that both Valley Water and City inspection staff are present for all permit required inspections. City agrees to provide and conduct all requested inspections promptly and shall not unreasonably delay determinations and conclusions from said inspections.

(5) Valley Water shall provide quality control testing that shall be completed by a third-party testing lab for City Improvement Work. Both laboratory and field testing shall be provided for concrete, asphalt, and class II aggregate base to ensure the work is in compliance with Valley Water's Construction Documents and City Standards. Improvements not passing testing requirements shall be reworked by the Contractor until compliance with the project requirements.

5. Cost Sharing: Review, Approval and Payment for City Improvement Work

a. In consideration of the Valley Water's work described in Section 3.a through 3.g, City agrees to remit payment for the City Improvement Work identified in Exhibit F. Exhibit F is a Cost Estimate of City Improvement Work and Payment to Valley Water for the LBC, LCC and LPC Projects. City will reimburse Valley Water for the total cost of Valley Water's construction cost of the City Improvement Work as provided in an updated Exhibit F that will be based on actual bid pricing from the construction contract awarded for each respective creek project.

b. Valley Water has constructed the LBC Project and included each component of the LBC City Improvement Work as separate "bid items" in order to ascertain the bidders' proposed price for this work. Valley Water awarded the contract in July 2016 and completed the civil work in

July 2020. The attached Exhibit F reflects the actual bid pricing from the construction contract awarded for the LBC Project and requires no further update with respect to the LBC Project.

c. Valley Water will publicly bid the LPC and LCC Projects and include each component of the LPC and LCC City Improvement Work as separate bid items in order to ascertain the bidder's proposed price for this work.

d. Valley Water agrees to provide City with notice, documentation, and plans regarding any modifications, revisions, change orders, and/or extra work required for City Improvement Work within seven (7) calendar days of Valley Water becoming aware of or initiating such matter, so City can provide direction to Valley Water, if necessary and appropriate.

e. City will respond to Valley Water regarding such matters within seven (7) calendar days of receipt of such modification information and provide written direction to Valley Water, if necessary and appropriate.

f. Final Accounting & Payment for LPC Project. City agrees to remit payment of 10% of the costs outlined in the updated Exhibit F, as describe above in this subsection 5.a., within 30 business days of receiving a notice from Valley Water that Valley Water has awarded a construction contract for the LPC Project. Following Valley Water's satisfactory completion of City punchlist items for the LPC project as described in Sections 6.a to 6.e, City agrees to initially accept the constructed City improvements and remit payment of 80% of the costs outlined in the updated Exhibit F for the LPC within 30 business days of acceptance after the Upper Berryessa Creek condition in 5.h is met. At the completion of the 1-year warranty period and City's issuance of the Notice of Final Acceptance of the work, City will remit the remaining final 10% owed of the costs outlined in the updated Exhibit F for the LPC.

g. Final Accounting & Payment for LCC Project. City agrees to remit payment of 10% of the costs outlined in the updated Exhibit F for the LCC within thirty (30) business days of receiving a notice from Valley Water that Valley Water has awarded a construction contract for the LCC Project. Following Valley Water's satisfactory completion of punchlist items for the LCC project as described in Sections 6.a to 6.e, City agrees to initially accept the constructed City improvements and remit payment of 80% of the costs outlined in Exhibit F for the LCC within 30 business days of acceptance after the Upper Berryessa Creek condition in section 5.h is met. At the completion of the 1-year warranty period and City's issuance of the Notice of Final Acceptance of the work, City will remit the remaining final 10% owed of the costs outlined in Exhibit F for the LCC.

h. Final Accounting & Payment for LBC Project. City agrees to remit final payment to Valley Water for City Improvement Work constructed as part of LBC project after City acceptance of the resolution of the outstanding claim and punchlist work associated with the Upper Berryessa Creek (UBC) Project. An amount of $41,125 shall be deducted from the payment to Valley Water to reimburse City for its cost to replace the landscape damage from the UBC Project. Final payment shall be made

within thirty (30) business days after City's initial acceptance of City Improvement Work constructed as part of LCC project.

6. Completion and Acceptance

a. Valley Water shall provide a "Preliminary Notice of Completion" to City within seven (7) business days after completion of the Project improvements that will be owned by the City. The LCC, and LPC Projects will have different schedules so notification will be after each Project is completed.

b. City shall conduct, and Valley Water shall permit, within ten (10) business days thereafter (the "Inspection Period"), a final inspection of the Project improvements owned by the City.

c. If City determines that the City improvements have met the requirements in the plans and specifications for the LBC, LCC or LPC Projects approved by the City, the City will, no later than thirty (30 business days after receipt of the Preliminary Notice of Completion, provide Valley Water with written notice of its acceptance of the City Improvement Work for the subject project ("Notice of Acceptance").

d. If City reasonably determines that the City Improvement Work does not meet the requirements of the plans and specifications for the subject LBC, LCC or LPC Projects approved by the City, the City shall, no later than ten (10) business days after the close of the Inspection Period, provide Valley Water with a written enumeration of the reasons why the City Improvement Work does not comply with said plans and specifications. Any inspection items or concern identified by the City that are not a part of the approved plans or specifications or an approved change order will constitute a new request and shall not be treated as an identified City Improvement Work included in the Scope of Work of this Agreement. New requests from the City may be negotiated by the parties at Valley Water's discretion. Any new request, unless identified to address a valid public safety concern not resulting from prior direction by the City, shall be at the City's cost. The parties will thereafter confer within ten (10) business days to determine what additional matters should be addressed to bring the City Improvement into compliance with the plans and specifications (i.e., punchlist) for the subject LBC, LCC or LPC Projects approved by the City. Valley Water shall work with their contractor to make any agreed upon corrections as are necessary within a reasonable time that is allowed under regulatory permit conditions, as required by City Encroachment Permit to meet the terms of the plans and specifications.

e. Upon completion of the punchlist corrections, Valley Water shall again submit to City a Preliminary Notice of Completion. The process of inspection and acceptance set forth in the preceding paragraphs of this Section 6 will then apply to this subsequent Preliminary Notice of Completion and issuance of a Notice of Acceptance.

f. Following the City's acceptance of the City Improvement Work, a 1-year warranty period will commence for the City Improvement Work listed in Exhibit G. The 1-year warranty period will cover defects, as mutually agreed to by City and Valley Water, for City Improvement Work.

7. Record Drawings

Valley Water agrees to provide the City with electronic as-built record drawings for the projects including City Improvement Work in CAD format and PDF format within thirty (30) business days after Valley Water completes the as-built record drawings. The as-built documents may take up to 4 to 6 months to finalize after construction has completed. Upon completion of construction, Valley Water shall provide the City with two full-size sets of the contractors red-lined as-built drawings documenting all changes made during construction. Valley Water shall provide the City with two complete full-sized sets of final project record drawings including CAD files within 4-6 months after completion of construction activities.

8. Ownership of Improvements

Upon completion of the LBC, LCC and LPC Projects, the project improvements appurtenant thereto shall be the responsibility of Valley Water. The LBC, LCC and LPC Projects improves and modifies existing outfall structures as they tie-in to creek banks. Upon completion of the LBC, LCC and LPC Projects and acceptance of the outfall improvements by the City, the City shall own and maintain the newly constructed outfall structures and flap gates/check valves in perpetuity. Any utility, bridge, and other facilities which were owned by the City prior to the LBC, LCC and LPC Projects shall remain the property of the City. The City shall own and maintain the newly constructed City Improvement Work and trail improvements along the LBC and LPC (see Exhibit G) in perpetuity. The rights, duties, and obligations of the Parties as set forth above in Section 4.a.(1). will survive termination, expiration, and suspension of this Agreement.

9. Indemnification

In lieu of and notwithstanding the pro rata risk allocation, which might otherwise be imposed between the parties pursuant to Government Code Section 895.6, the parties agree that all losses or liabilities incurred by a party shall not be shared pro rata but, instead, Valley Water and City agree that, pursuant to Government Code Section 895.4, each of the parties hereto shall fully indemnify, defend, and hold each of the other parties, their officers, board members, employees, and agents, harmless from any claim, expense or cost, damage or liability imposed for injury (as defined in Government Code Section 810.8) occurring by reason of the negligent acts or omissions or willful misconduct of the indemnifying party, its officers, employees, contractors, or agents, under or in connection with or arising out of any work, authority, or jurisdiction delegated to such party under this Agreement. No party, nor any officer, board member, or agent thereof shall be responsible for any damage or liability occurring by reason of the negligent acts or omissions or willful misconduct of the other party hereto, its officers, board members, employees, contractors, or agents, under or in connection with or arising out of any work, authority or jurisdiction delegated to such other party under this Agreement. Further, Valley Water shall require its

contractor(s) to indemnify, defend and save City harmless to the same extent that Valley Water is indemnified under the contract between Valley Water and its contractor(s). The obligations set forth in this paragraph will survive termination, suspension, completion and expiration of this Agreement.

10. Term and Termination

a. The term of this Agreement will commence on the Agreement Effective Date and shall terminate when the LBC, LCC and LPC Projects are completed, upon City acceptance of City Improvement Work, and receipt by Valley Water of full payment from the City for Valley Water's reasonable costs for design, construction, and construction management on the City Improvement Work. Full payment to Valley Water from the City for Valley Water's reasonable costs for design, construction, and construction management on the City' Improvement Work shall be as outlined in Sections 5.f, 5.g, and 5.h. Valley Water and City may mutually agree to extend the term of this Agreement.

b. The Agreement can be terminated only upon mutual written consent upon terms acceptable to both parties. Except for breach by District of this Agreement, City shall reimburse District for its reasonable costs in performing the City Improvement Work up to the termination date of this Agreement.

11. Insurance, Bonds, Risk of Loss, Damage to City Property, and Warranty

a. During construction and until acceptance of either the LBC, LPC, or LCC Project by Valley Water's Board of Directors, Valley Water assumes and shall bear all risk of loss, injury, damage or destruction to the City property (including, without limitation, City Improvement Work and any construction work in progress, materials, improvements, machinery and equipment). Notwithstanding the foregoing, should Valley Water encounter pre-existing material reasonably believed to be toxic waste and hazardous materials which have not been rendered harmless on City-owned property, Valley Water shall immediately stop work at the affected site and shall report the condition to the City in writing. The City shall have the option of separately contracting for any services required to directly remove and/or abate the toxic wastes and hazardous materials, if required, or may request Valley Water to perform the same with its contractor at City's cost. The work in the affected area shall not thereafter be resumed except by agreement of the City. Valley Water shall not be responsible for the cost of removal or abatement of any such pre-existing toxic wastes and hazardous materials except where the presence or further spread of such pre-existing toxic wastes or hazardous materials is attributable to Valley Water or its contractor's acts or omissions.

b. Valley Water shall be responsible for all damages to persons or property that occurs as a result of its work and the work of its contractors covered by this Agreement, except damage or injury caused by City of Milpitas' negligence or willful misconduct. Without limiting the foregoing, Valley Water shall remedy at its expense any damage to persons or property, including City-owned or controlled real or personal property, caused by or

resulting from the negligent acts or omissions of Valley Water, its officials, officers, contractors, consultants or agents, except damage or injury caused by City of Milpitas' negligence or willful misconduct. The City shall notify Valley Water, in writing, within a reasonable time after the discovery of any failure, defect, or damage caused by or resulting from the acts or omissions of Valley Water, its officials, officers, contractors, consultants or agents. After being notified, Valley Water shall perform with due diligence all necessary remediation work if Valley Water determines the failure, defect, or damage was caused by Valley Water's negligence. If Valley Water is not at fault as determined by a mutually agreed upon dispute resolution process in accordance with paragraph 12 below, Valley Water may decide to proceed with the remediation work. Upon completion of remediation work, City shall reimburse Valley Water for that portion, if any, of the remediation work caused by City's negligence or willful misconduct. If Valley Water is deemed to be partially at fault, and fails to promptly remedy any defect or damage; the City shall have the right to replace, repair or otherwise remedy the defect or damage, and then withhold any payment due Valley Water, but only in the amount of the cost to remedy the defect, or seek reimbursement from Valley Water to the extent that Valley Water is at fault.. In the event of any emergency constituting an immediate hazard to health, safety or property, the City may undertake at Valley Water's expense, and without prior notice, all work necessary to correct such condition.

c. Valley Water shall require its contractor(s) to procure prior to commencement of construction of the LCC and LPC Projects and maintain for the duration of the LCC and LPC Projects the following types and limits of insurance in connection with the performance of the LCC and LPC Projects by Valley Water's contractor(s):

Coverage Type and Scope	Minimum Coverage Limits
Commercial general liability coverage (Insurance Services Office occurrence form CG 0001), including liability coverage for premises and operations, explosion and collapse hazard, underground hazard, products/completed operations hazard, contractual liability, use of independent contractors, and broad form property damage with completed operations	$5,000,000 per occurrence and in the aggregate for general liability, bodily injury, personal injury, and property damage
Automobile liability (Insurance Services Office form CA 0001, code 1, any auto)	$5,000,000 per accident for bodily injury, including death, and property damage
Workers' compensation	Statutory limits required by State of California
Employers' liability	$1,000,000 per accident for bodily injury or disease

(1) Valley Water shall require its contractor(s): (1) to add the City and its officers, officials, employees, agents and authorized volunteers as additional insureds on the contractor's commercial general

liability (using ISO CG 20 38 for ongoing operations, as well as ISO CG 20 37 for completed operations or endorsements at least as broad) and business automobile liability policies; (2) to provide a waiver of subrogation in favor of City and its officers, officials, and employees on the contractor's commercial general liability, business automobile liability and workers' compensation/ employer's liability policies; and (3) to provide all coverage under the commercial general liability and business automobile liability policies on a primary and non-contributory basis. The coverage provided by the Valley Water's contractor shall contain no special limitations on the scope of protection afforded the City. After execution of this agreement, Valley Water shall forward a copy of its contractor's proof of insurance on ACORD Form 25-S and all necessary endorsements required herein. Any greater levels of coverage or endorsement requested by the City shall be paid for by the City.

(2) For the LBC project that has completed construction, Valley Water's contractor has provided coverage: (1) to add the City and its officers, employees, agents and authorized volunteers as additional insureds on the contractor's commercial general liability and business automobile liability policies; (2) to provide a waiver of subrogation in favor of City and its officers, and employees on the contractor's commercial general liability, business automobile liability and workers' compensation/ employer's liability policies; and (3) to provide all coverage under the commercial general liability and business automobile liability policies on a primary and non-contributory basis. The coverage provided by the Valley Water's contractor shall contain no special limitations on the scope of protection afforded the City.

(3) Valley Water will require its contractor(s) to post a performance bond, letter of credit or other financial security (the "Performance Bond") in a sum equal to a minimum 100% of the estimated cost of the applicable LCC and LPC Projects. The Performance Bond will be for the purpose of insuring the proper completion of the subject Project(s). If Valley Water's contractor fails to complete the subject Project(s) covered by the Performance Bond in accordance with the construction contract, Valley Water agrees to diligently pursue and enforce its and the City's remedies under the Performance Bond. For the LPC and LCC Project construction agreement, Valley Water also agrees to require its contractor and contractor's surety to name the City as co-obligee on the Performance Bond or to add City as an obligee through a co-obligee or dual obligee rider.

d. Valley Water will require its contractor(s) to warranty all materials and workmanship furnished in the construction of the City Improvement Work for one year from the date of Valley Water's issuance of the Notice of Completion. Valley Water shall manage and oversee the City's warranty rights related to the City Improvement Work and pursue and enforce the

warranty for defects in workmanship or materials and require the construction contractor to repair or replace the defective work so that it complies with the City Improvement Work plans and specifications reviewed and approved by the City. Valley Water shall not be obligated to pursue any warranty rights for defects in workmanship or materials that Valley Water reasonably determines are beyond or outside the provisions of the approved plans and specifications provided that any dispute regarding the same shall be submitted to the dispute resolution process under Section 12 below.

12. Disputes

a. This Agreement requires that City and Valley Water work together in good faith to achieve the intent of this Agreement. In the event a dispute arises as to the proper interpretation of the respective obligations and responsibilities of the Parties under this Agreement, or as to any other aspect of this Agreement, City and Valley Water agree that they each will assign the appropriate individuals to meet and make good faith efforts to negotiate a resolution of the dispute.

b. If after employing this informal resolution process either City or Valley Water may request an independent, mutually agreed upon mediator to facilitate further negotiation with the costs shared equally between each Party. However, nothing herein will prevent either City or Valley Water from exercising any rights it may have to enforce the terms of this Agreement at law or in equity.

13. Assignability

Both City and Valley Water agree that each party's responsibilities as detailed herein have been determined in their mutual best interest toward accomplishing LBC, LCC and LPC Projects completion. Without the written consent of the other, neither City nor Valley Water will assign or transfer any interest in this Agreement or any of the obligations hereunder except to contractors or consultants working directly for them. Any unauthorized attempt by City or Valley Water to assign or transfer will be void and of no effect.

14. Written Notices

Except as otherwise specifically described herein, all communications with respect to this Agreement shall be given by first class mail to the parties as follows:

Valley Water	City
Rechelle Blank, P.E. Deputy Operating Officer Valley Water 5750 Almaden Expressway San Jose, CA 95118	Steven Erickson, P.E. Engineering Director/City Engineer City of Milpitas 455 E. Calaveras Blvd. Milpitas, CA 95035-5411
Or to such other person, addresses, or telephone numbers as the parties may designate in writing from time to time.	

15. Severance of Invalid Terms

If any term, condition or covenant of this Agreement is held by a court of competent jurisdiction to be illegal, invalid, void or unenforceable, the remaining provisions of this Agreement shall be valid and binding on Valley Water and City, unless an essential purpose of this Agreement would be defeated by the loss of the illegal, invalid, void or unenforceable provision.

16. No Implied Waiver

The waiver by either City or Valley Water of any breach of any term, covenant, or condition contained in this Agreement, or any default in the performance of any obligations under this Agreement, shall not be deemed to be a waiver of any other term, covenant, condition, or obligation. Nor shall any waiver of any incident of breach or default constitute a continuing waiver of the same.

17. Governing Law and Compliance with Laws

This Agreement shall be constructed in accordance with the laws of the State of California. In the performance of this Agreement, City and Valley Water will comply with all applicable laws, ordinances, codes and regulations of the federal, state, and local governments.

18. Venue

In the event that suit is brought by either City or Valley Water, each agrees that venue will be exclusively vested in the state courts of either the County of Santa Clara, or in the United States Court, Northern Valley Water of California, in San Jose, California.

19. Nondiscrimination

a. In the performance of the Agreement, the parties will comply with all applicable federal, state, local laws and regulations, and will not discriminate against any contractor, subcontractor, employee, or applicant for employment, in the recruitment, hiring, employment, utilization, promotion, classification or reclassification, transfer, recruitment advertising, evaluation, treatment, demotion, layoff, termination, rates of pay or other forms of compensation, and selection for professional development training (including apprenticeship), or against any other person, on the basis of sex (which includes pregnancy, childbirth, breastfeeding and medical conditions related to pregnancy, childbirth or breastfeeding), race, religion, color, national origin (including language use restrictions), ancestry, religious creed (including religious dress and grooming practices), political affiliation, disability (mental and physical, including HIV or AIDS), medical condition (cancer and genetic characteristics), genetic information, marital status, parental status, gender, age (40 and over), pregnancy, military and veteran status, sexual orientation, gender identity and gender expression, the exercise of family and medical care leave, the exercise of pregnancy disability leave, or the request, exercise, or need for reasonable accommodation.

b. Compliance with Applicable Equal Opportunity Laws. The City's policy must conform with applicable state and federal guidelines including the Federal Equal Opportunity Clause, "Section 60-1.4 of Title 41, Part 60 of the Code of Federal Regulations," Title VII of the Civil Rights Act of 1964 as amended; the American's with Disabilities Act of 1990; the Rehabilitation Act of 1973 (Sections 503 and 504); the Age Discrimination Act of 1975 (42 U.S.C. sec. 6101 et seq.); California Fair Employment and Housing Act (Government Code Section 12900 et. Seq.); California Labor Code Sections 1101 and 1102.

c. Investigation of Claims. City must designate a specific position within its organization to be responsible for assuring nondiscrimination and non-harassment as provided in this Agreement. City must investigate all complaints directed to it by District. District will refer complaints in writing and City will advise District in writing when such investigations are concluded. The scope of such investigations must include all appropriate officers, employees, and agents of the City, as well as all contractors, subcontractors, consultants, subconsultants, and material suppliers of the City. In cases where such investigation results in a finding of discrimination, harassment, or hostile work environment, City must take prompt, effective disciplinary action against the offender.

20. Ownership of Materials

Except as otherwise set forth herein, all design and construction documents related to the LBC, LPC, and LCC Project improvements developed or discovered by Valley Water or any other person engaged directly or indirectly by Valley Water to perform the services required hereunder will be and remain the property of the Valley Water. City and Valley Water will make available to the other party such other records under its control as may be reasonably required for the parties to perform under this Agreement. City and Valley Water will maintain all documents and records produced under this Agreement for a minimum period of three years, or any longer period required by law, from the date of termination or completion of this Agreement.

21. Execution in Counterparts

This Agreement may be executed in counterparts, each of which, when executed and delivered, will be deemed to be an original, and which taken together will be deemed to be one and the same instrument, and will be binding as executed.

22. No Third Party Beneficiaries

This Agreement is entered into only for the benefit of the parties executing this Agreement and not for the benefit of any other individual, entity, or person.

23. Compliance with Other Conditions

Valley Water acknowledges that the authorization contained herein is in addition to and not in lieu of any other easements, inspections, or approvals which Valley Water may need to obtain from City, from other utility providers, or from property owners with respect to its construction of the LBC, LCC and LPC Projects. In

consideration of the numerous benefits to be gained by the City from Valley Water's construction of City Improvement Work and LBC, LPC, and LCC Project improvements, any land use along City right of way, inspections, or approvals to be granted or conducted by the City shall be at no cost to Valley Water in accordance with the MOU as set forth in Section 4.a.(1). of this Agreement.

24. Successors and Assigns

This authorization will bind and inure to the benefit of the parties, the respective heirs, successors and assigns.

25. Exhibits

The following Exhibits are attached hereto and incorporated herein by this reference:

- Exhibit A: LBC Trail Agreement
- Exhibit B: LPC Trail Agreement
- Exhibit C: LCC and LPC City Approved Drawings for Improvement Removal and Replacement
- Exhibit D: LCC and LPC Extent of the Black Vinyl Fences
- Exhibit E: LCC Headwall Structure at North Milpitas Boulevard and Arizona Avenue
- Exhibit F: Estimated Cost of City Improvement Work and Payment to Valley Water
- Exhibit G: LCC and LPC List of City Improvement Work

26. Construction of Agreement

The parties hereto acknowledge and agree that, although this Agreement has been drafted by Valley Water's legal counsel, City has had an opportunity to review and negotiate the terms of this Agreement as well as consult with City's own legal counsel regarding the meaning of its terms. Consequently, the doctrine that ambiguities in an agreement should be resolved against the drafting party shall not be employed in connection with this Agreement, and this Agreement shall be interpreted in accordance with its fair meaning.

27. Amendments

All modifications to this Agreement must be in writing in the form of an amendment approved by both parties.

(REMAINDER OF PAGE INTENTIONALLY LEFT BLANK)

28. Entire Agreement

This Agreement constitutes the entire agreement between the parties pertaining to the subject matter contained therein and supersedes all prior or contemporaneous agreements, representations and understandings of the parties relative thereto, except for the LBC Trail Agreement, attached hereto as Exhibit A, and the LPC Lease Agreement Joint Use, SCVWD Agreement No. A2001, attached hereto as Exhibit B.

(SIGNATURES FOLLOW ON NEXT PAGE)

(REMAINDER OF PAGE INTENTIONALLY LEFT BLANK)

IN WITNESS WHEREOF, the above parties have executed this Agreement the day and year last written below.

VALLEY WATER, A SPECIAL DISTRICT CREATED BY THE CALIFORNIA LEGISLATURE:

APPROVED AS TO FORM:

By: _____
Joseph D. Aranda
Assistant District Counsel

By: _____
Nai Hsueh
Chair, Board of Directors

By: _____
Michele L. King, CMC
Clerk, Board of Directors

Date: _____

CITY OF MILPITAS, A MUNICIPAL CORPORATION:

Recommended by:

_____
Steven Erickson
Engineering Director/City Engineer

Attest:

_____
Mary Lavelle
City Clerk

APPROVED AS TO FORM:

By: _____
Christopher J. Diaz
City Attorney

By: _____
Steven McHarris
City Manager

By: _____
Walter C. Rossman
Director of Financial Services

Date: _____

EXHIBIT A
LBC Trail Agreement

File: City of Milpitas
Berryessa Creek
X-File: 4017-42, 44, 48, 52

JOINT USE AGREEMENT
Berryessa Creek Trail

SANTA CLARA VALLEY WATER DISTRICT, a public corporation, hereinafter referred to as "District", and the CITY OF MILPITAS, hereinafter referred to as "City", agree this 4th day of September, 2002 as follows:

RECITALS

A. District is the owner of certain real property (hereinafter "the premises"), along Berryessa Creek between North Abel Street and North Hillview Drive, described on EXHIBIT A attached hereto, so marked and by this reference made a part hereof.

B. City and District recognize that the premises are regulated by a variety of federal, state and local agencies.

C. City and District, in cooperation with the U.S. Army Corps of Engineers, the California Department of Water Resources and the California Department of Fish and Game, agree to use the premises for non-vehicular (except for maintenance, emergency and enforcement vehicles) and recreational purposes as well as for flood control and water conservation purposes.

D. The parties find it to be in the public interest to provide for joint use of the premises through the terms and conditions of an Agreement.

AGREEMENT

1. District shall and does hereby grant permission to City to use the premises for the following purpose or purposes and subject to the following special restrictions:

   a. Enter the premises for purposes set forth in the Agreement.
   b. Operate and oversee the premises for public use for non-vehicular recreational purposes, subject to the terms and conditions set forth in this Agreement.
   c. Install as needed, and as approved by District permit, and maintain at City's own expense, paving, pedestrian bridge, ramps, stairs, gates, signs, fencing, trash receptacles and related amenities (hereinafter "improvements").
   d. Entry of motor vehicles, dogs or other domestic animals (except on leash), swimming, boating, rafting and fires are not permitted hereunder and such uses shall be effectively controlled by City.

2. City shall provide and maintain garbage receptacles for public use, and provide for adequate waste removal service. City shall also provide graffiti removal within the premises in compliance with City's graffiti abatement program, including graffiti removal from signs installed in conjunction with and/or accessory to the establishment of a public park and pathway consistent with its implementation of the same program at comparable City facilities.

3. The public pathway and corridor, the subject of this Agreement, may be patrolled by City personnel, ranger services under contract with City and/or volunteers supervised by City. District shall have no obligation whatsoever to provide or pay for such services.

4(a). City must remove and, if it so chooses, replace recreational improvements installed by the City in the event District requires such removal to improve, maintain, or repair Berryessa Creek in any manner for District purposes. If removal is not required by District, the City shall compensate the District for costs to remove, redesign, replace, or modify District facilities to accommodate continued use or presence of City's improvements. District shall inform City of pre-construction planning, as described in Section 6, in the event a District project is needed, to minimize District's project impact on City's public pathway and financial investments.

4(b). District is planning to implement a major flood protection improvement project within the premises. District and City intend to include in the plans a bicycle-pedestrian trail that will also support District operations and maintenance functions. City will collaborate with District in such flood protection and trail planning for Berryessa Creek. City has prepared "Berryessa Creek Trail and Coyote Creek Trail Feasibility Report" describing a proposed trail alignment, a trail underpass at North Milpitas Boulevard and other desired features for consideration. City and District propose to develop an appropriate cost-sharing arrangement to address the interests of both agencies in providing public trail access to the premises.

5. Damage occurring to City's structures or paving by reason of District's maintenance or other activity or by reason of natural forces will not be the responsibility of District to repair or restore; all such costs for such repair or restoration are to be borne by City.

6. City and District shall meet whenever necessary for the purposes of scheduling routine maintenance, including but not limited to:

   a. Maintenance issues related to improvements.
   b. Method and timing of issues related to affected wildlife.
   c. Non-emergency work requiring the use of heavy equipment, barricading, and/or restricting access to the premises. District and City further agree to notify one another's designated representative as required prior to commencement of such work, in order to minimize public impacts and damage to City's and District's improvements.
   d. In an emergency situation, District shall have rights provided in Paragraph 13 without consulting City.

7. City and District recognize the unique nature of the resources and recreational uses covered by this Agreement and the beneficial effects to both parties of providing these resources to the public. City and District resolve to utilize their respective offices to mutually support the efforts of each other to deliver such services to the public. City and District further agree to cooperate in order to resolve disputes and assist each other in responding to public inquiries arising from the activities of the parties of either team.

   City will encourage volunteer groups to participate in District's "Adopt-A-Creek" program.

8. Native plants selected by a licensed landscape architect with native habitat experience or other qualified professional should be used for revegetation purposes.

9. Construction work during spring nesting season will be avoided whenever possible. The parties acknowledge that spring nesting season occurs between February 1 and July 1. If construction must be done during the nesting season, a survey by a qualified biologist will be undertaken to determine the presence of nesting activity. If no nesting activity is reported, then the work may proceed. If nesting activity is reported, the biologist is expected to recommend the implementation of adequate mitigation measures. Environmental impact shall be considered prior to all work. Any and all work related to this clause shall be completed in accordance with applicable federal, state, and local environmental health and safety regulations including the federal Migratory Bird Act of 1918 and any amendments thereto.

10. The parties shall cooperate to create and install signage which benefits the programs of each party such as warning signs, entrance signs, interpretative signs, and joint uses when applicable. The Chief Executive Officer of the District and the City Manager of the City or their designees shall meet and confer on a periodic basis to plan and install appropriate signage which serves the needs of both parties.

    All signs excepting existing ones or publications that identify the facility (e.g., park, trail) by name should include the District's logo in equal size and symmetric relationship to any other logos. All signs or publications that are intended to interpret the water resources should be developed in cooperation with the District's Public Information Office and should also include the District's logo in equal size and symmetric relationship to any other logos. Maintenance responsibility for signage and benches shall be the responsibility of either the District or the City, according to which entity has installed the improvements.

11. This Agreement shall be for a period of twenty-five (25) years beginning on the date it is approved by the District Board of Directors. City may, upon written notice to District of intent to do so, given not less than ninety (90) days prior to the termination date, renew this Agreement for a like period upon the same terms and conditions. Notice of intent to renew may be given by the City's Public Works Director or City Manager for City. It is understood and agreed that this Agreement may be superseded and incorporated into any future joint use agreement or lease arrangement with the City along Berryessa Creek.

12. City shall have the full control and authority, for purposes of this Agreement, over the use of the premises, and City may restrict, or control, regulate and supervise the public use thereof. City may, in its discretion but consistent with the right of District hereinafter described, and without diminution of the environment, flood control or conservation function or hazard thereto of the premises as now existing or as may hereinafter be altered, take any measures of every kind as may in the opinion of City be necessary for the safety of the users of the premises for any joint use agreement purpose. Further, City shall have the sole responsibility for the maintenance in usable and safe condition of every facility provided upon the premises for purposes of this Agreement.

13. District shall have the sole responsibility to maintain Berryessa Creek for flood control, water conservation and stream stewardship purposes, to repair and reconstruct the same where necessary for such purposes and to perform such periodic maintenance as may be appropriate to such purposes, including removal of silt, debris, and obstructive growth. It is expressly understood that District is engaged in flood control and the conservation of water and that the terms and conditions of this Agreement shall not in any way interfere with the absolute, free and unrestricted right of District to operate and maintain for its purposes the stream bed and banks or any appurtenant works thereto, or to repair or construct any of its works, or to raise or lower the height of the water present upon the premises; and it is further understood that nothing herein contained shall be construed as conferring a right upon City to have or a duty upon District to provide water upon the premises at any time. Damage to District's facilities arising from use of the premises by the public or by City representatives under this Agreement shall be the responsibility of the City.

14. It is also expressly understood by City that the level of water upon the premises may fluctuate from day to day due to controlled or uncontrolled flows upon and across the same, and that such fluctuations may require greater control over the use of the premises by City, and the public; provided, however, that City shall be responsible for informing itself thereof and of all other conditions of the premises whether open or covered which may in anywise affect the health and safety of the users of the premises hereunder.

15(a). City shall have the right to build any improvements on the premises necessary or convenient to the enjoyment of this Agreement, provided the location of any such improvement is, in each case during the term of this Agreement, first approved by District. It is fully understood and agreed that District's basis of approval or disapproval of improvements is its responsibility to insure that the same shall not constitute an obstruction to flood flows and shall not interfere with the use of the premises for flood control or water conservation purposes, and does not in anywise extend to

consideration of the health and safety of users of the premises, which latter consideration is the responsibility of the City.

(b). Improvements built by City on the promises shall remain the property of City and upon the termination of this Agreement shall be removed by City, leaving the premises in a condition as near as reasonably possible to its condition prior to such improvements. If District, in the interest of health and safety and in the exercise of lawful powers, requires that such an improvement must be removed or relocated, the same shall be done at City's expense.

16(a). City shall assume the defense of, indemnify and hold harmless, District, its officers, agents, and employees from all claims, liability, loss, damage, and injury of any kind, nature, or description directly or indirectly arising during the initial term of this Agreement, or any renewal thereof, and resulting from the public use of the premises pursuant hereto or from public use of adjacent premises of District occurring in consequence of City's or the public's use of the premises or from acts, omissions, or activities of City's officers, agents, employees, or independent contractors employed by City, excepting claims, liability, loss, damage, or injury which arise from the willful or negligent acts, omissions, or activities of an officer, agent, or employee of District. This Agreement to defend, indemnify, and hold harmless the District shall operate irrespective of whether negligence is the basis or the claim, liability, loss, damage, or injury and irrespective of whether the act, omission, or activity is merely a condition rather than a cause.

(b). District shall assume the defense of, indemnify, and hold harmless, City, its officers, agents, and employees from all claims, liability, loss, damage, and injury of any kind, nature or description directly or indirectly arising from District's exercise of its flood control or water conservation purposes on the premises pursuant hereto or from acts, omissions, or activities of District's officers, agents, employees, or independent contractors employed by District excepting claims, liability, loss, damage, or injury which arises from the willful or negligent acts, omissions or activities of an officer, agent, or employee of City. This Agreement to defend, indemnify, and hold harmless shall operate irrespective of whether the act, omission, or activity is merely a condition rather than a cause.

17. Any and all notices required to be given hereunder shall be deemed to have been delivered upon deposit in the United States mail, postage prepaid, addressed to either of the parties at the address hereinafter specified or as later amended by either party in writing:

EXHIBIT A
LBC Trail Agreement (continued)

City	District
City Manager	Chief Executive Officer
City of Milpitas	Santa Clara Valley Water District
455 East Calaveras Blvd.	5750 Almaden Expressway
Milpitas, California 95035	San Jose, California 95118

18. This Agreement, and all the terms, covenants, and conditions thereof, shall apply to and bind the successors and assigns of the respective parties hereto; provided that City shall neither assign nor sublet this Agreement without prior written consent of District.

19. This Agreement includes any and all exhibits, covenants, agreements, conditions, and understandings between City and District concerning the premises. There are no covenants, agreements, conditions, or understandings, either oral or written, between the parties hereto other than herein set forth.

WITNESS THE EXECUTION HEREOF the day and year first hereinabove set forth.

CITY OF MILPITAS

By: Thomas J. Wilson
City Manager
"City"

SANTA CLARA VALLEY WATER DISTRICT,
a public corporation

By: Rosemary C. Kamei
Chair/Board of Directors
"District"

ATTEST:

Gail Blalock
City Clerk

ATTEST:

Lauren L Kelly
Clerk/Board of Directors

APPROVED AS TO FORM:

Peter L. Whitnell
Asst. City Attorney

A C Kennett
General Counsel

EXHIBIT A
LBC Trail Agreement (continued)

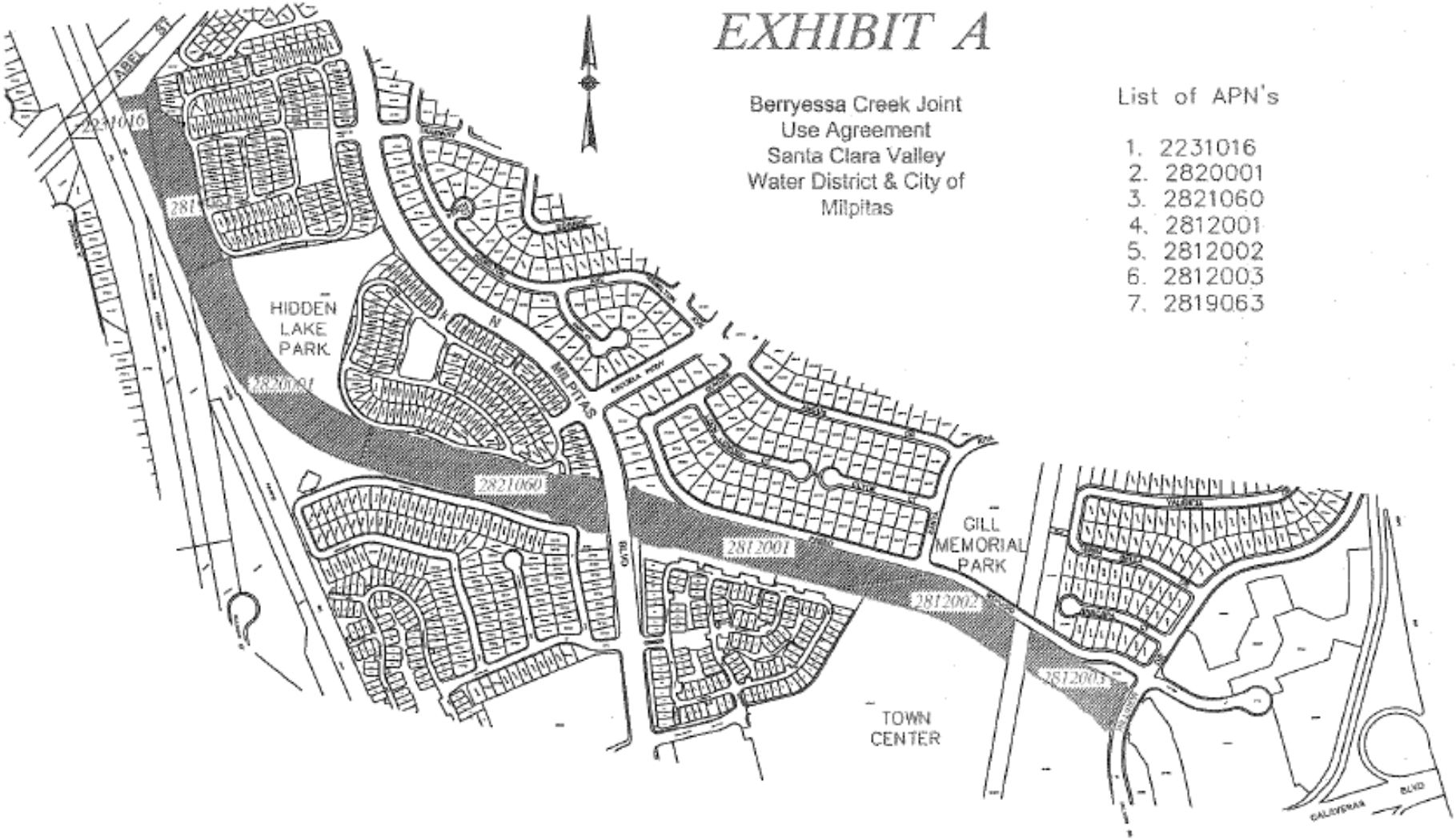

EXHIBIT B
LPC Trail Agreement

File: A/C Leases
City of Milpitas
X-File: 4033-49

LEASE AGREEMENT
(Joint Use)

SCVWD AGMNT. NO. A2001

SANTA CLARA VALLEY WATER DISTRICT, a public corporation, hereinafter referred to as "District," and the CITY OF MILPITAS, hereinafter referred to as "Lessee;"
AGREE this 7th day of JANUARY, 1997, as follows:

RECITALS:

A. District is the owner of certain real property identified as "SCVWD Penitencia Creek" shown on "Exhibit A" attached hereto and incorporated herein by reference. The cross-hatched areas within said real property as shown on Exhibit A constitute the leased premises (hereinafter "the premises") for the purpose of this agreement.

B. The parties find it to be in the public interest to provide for joint use of the premises by means of a lease thereof under the following terms and conditions.

C. Lessee has constructed certain improvements on premises by permit from District.

AGREEMENT:

1. District shall and does hereby lease the premises to Lessee for the following purpose or purposes and subject to the following special restrictions:

1(a). Pedestrian and emergency vehicle access on the west levee of Lower Penitencia Creek connecting North Abbott Avenue (at San Andreas Drive) to the new Milmont Drive/California Circle Bridge over the creek channel. Improvement to the top of levee shall be in accordance with District's requirements. Surfacing for the emergency vehicle access shall be all-weather with asphalt concrete or portland cement concrete. Any fencing shall be in accordance with District's permit requirements and with approval of Pacific Gas and Electric Company (PG&E).

1(b). Lessee has installed landscaping, drainage, and a pedestrian way on the east slope of the east levee of Penitencia Creek. Any landscaping or other improvements placed by Lessee pursuant hereto shall be maintained by Lessee.

1(c). Any improvement installed by Lessee shall be at Lessee's expense and shall be installed in accordance with District permit and with approval of PG&E or its successor.

1(d). Lessee shall comply with any and all requirements of PG&E, or its successor, to protect PG&E's facilities located within the premises. Lessee shall be responsible to take measures to protect the

RE1734p (01/01/93)

1 of 4

ORIGINAL

District, third parties and the public including, but not limited to installation or modification of safety devices, guardrails, etc., as determined necessary by PG&E to protect such persons. District shall assume no liability or responsibility for cost of same.

2. This Lease shall be for a period of 25 years, beginning on 7th of January, 1997. Lessee may, upon written notice to District of intent to do so, given not less than ninety (90) days prior to the termination date, renew this Lease for a like period upon the same terms and conditions. This Lease may be terminated without cause by either party upon ninety (90) days prior written notice to the other. Notice of intent to renew or to terminate may be given by Public Works Director for Lessee.

   Notice of intent to terminate may be given by the General Manager of District for the District.

3. Lessee hereby has full control and authority, for purposes of this Lease, over the use of the premises, and Lessee may restrict, or control, regulate and supervise the public use thereof. Lessee may, in its uncontrolled discretion (but consistent with the right of District hereinafter described, and without substantial or hazardous diminution of the flood control or conservation function of the premises as now existing or as may hereafter be altered), take any measures of every kind as may in the opinion of Lessee be necessary for the safety of the users of the premises for any lease purpose. Further, Lessee shall have the sole responsibility for the maintenance in usable and safe condition of every facility provided upon the premises for purposes of this Lease.

4. District shall have the sole responsibility to maintain Lower Penitencia Creek for flood control and water conservation purposes, and for such purposes only, to repair and reconstruct the same where necessary for such purposes and to perform such periodic maintenance as may be appropriate to such purposes, including removal of silt, debris, and obstructive growth. It is expressly understood that District is engaged in flood control and the conservation of water and that the terms and conditions of this agreement shall not in any way interfere with the absolute, free and unrestricted right of District to operate and maintain for flood control and water conservation purposes the stream bed and banks or any appurtenant works thereto, or to repair or construct any of its works, or to raise or lower the height of the water present upon the premises; and it is further understood that nothing herein contained shall be construed as conferring a right upon Lessee to have or a duty upon District to provide water upon the premises at any time. Damage to District's facilities arising from use of the premises under this Lease shall be the responsibility of Lessee.

5. It is also expressly understood by Lessee that the level of water upon the premises may fluctuate from day to day due to controlled or uncontrolled flows upon and across the same, and that such fluctuations may require greater control over the use of the premises by Lessee and the public; provided, however, that Lessee shall be responsible for informing itself thereof and of all other conditions of the premises whether open or covered which may in anywise affect the health and safety of the users of the premises hereunder; and provided, further, that Lessee shall not be responsible for mosquito control on the premises. District shall give reasonable notice to Lessee whenever District, in the exercise of its flood control or water conservation activities performs or intends to perform any major work of maintenance, repair or reconstruction (other than routine removal of silt, debris, and obstructive growth) on the premises or on any District works appurtenant thereto.

6(a). Lessee shall have the right to build or modify any improvements on the premises necessary, or convenient to the enjoyment of this Lease; provided, the location of any such improvement is, in each case during the term of this agreement is first approved by District. It is fully understood and agreed that District's basis of approval or disapproval of improvements is its responsibility to insure that the same shall not constitute an obstruction to flood flows and shall not interfere with the use of the premises for flood control or water conservation purposes, and does not in anywise extend to consideration of the health and safety of users of the premises, which latter consideration is the responsibility of Lessee. Lessee assumes responsibility for obtaining approval for proposed improvements from PG&E or any other entity having an easement or other right of way on the premises.

6(b). Improvements built by Lessee on the premises shall remain the property of Lessee and upon the termination of this Lease shall be removed by Lessee, leaving the premises in a condition as near as reasonably possible to their condition prior to such improvements. If District, in the interest of health and safety and in the exercise of lawful powers, requires that such an improvement must be removed or relocated, the same shall be done at Lessee's expense.

7. Lessee shall assume the defense of, indemnify, and hold harmless, District, its officers, agents, and employees from all claims, liability, loss, damage, and injury of any kind, nature, or description which directly or indirectly arises from Lessee's or the public's use of the leased premises or for public use of adjacent District lands occurring as a result of this agreement, excepting claims, liability, loss, damage, or injury which arises from the willful or sole negligent acts, omissions, or activities of an officer, agent, or employee of the District. This agreement to defend, indemnify, and hold harmless shall operate irrespective of whether the cause of the claim, liability, loss, damage, or injury is an act, omission or activity, or a condition of the property.

8. Any and all notices required to be given hereunder shall be deemed to have been delivered upon deposit in the United States mail, postage prepaid, addressed to either of the parties at the address hereinafter specified or as later amended by either party in writing:

Lessee	**District**
City of Milpitas 455 East Calaveras Boulevard Milpitas, California 95035	Santa Clara Valley Water District 5750 Almaden Expressway San Jose, California 95118

9. This agreement, and all the terms, covenants, and conditions hereof, shall apply to and bind the successors and assigns of the respective parties hereto; **provided**, that Lessee shall neither assign nor sublet this agreement without prior written consent of District.

EXHIBIT B
LPC Trail Agreement (continued)

WITNESS THE EXECUTION HEREOF the day and year first hereinabove set forth.

SANTA CLARA VALLEY WATER DISTRICT,
a public corporation

By: _____
"Lessee"
Lawrence Moore
City Manager

By: _____
Chair/Board of Directors
"District"

ATTEST:

_____
Gail Blalock
City Clerk

ATTEST: LAUREN L. KELLER

_____
Clerk/Board of Directors

APPROVED AS TO FORM:

_____
Attorney

APPROVED AS TO FORM:

_____
General Counsel

RE1734p (01/01/93)

4 of 4

EXHIBIT B
LPC Trail Agreement (continued)

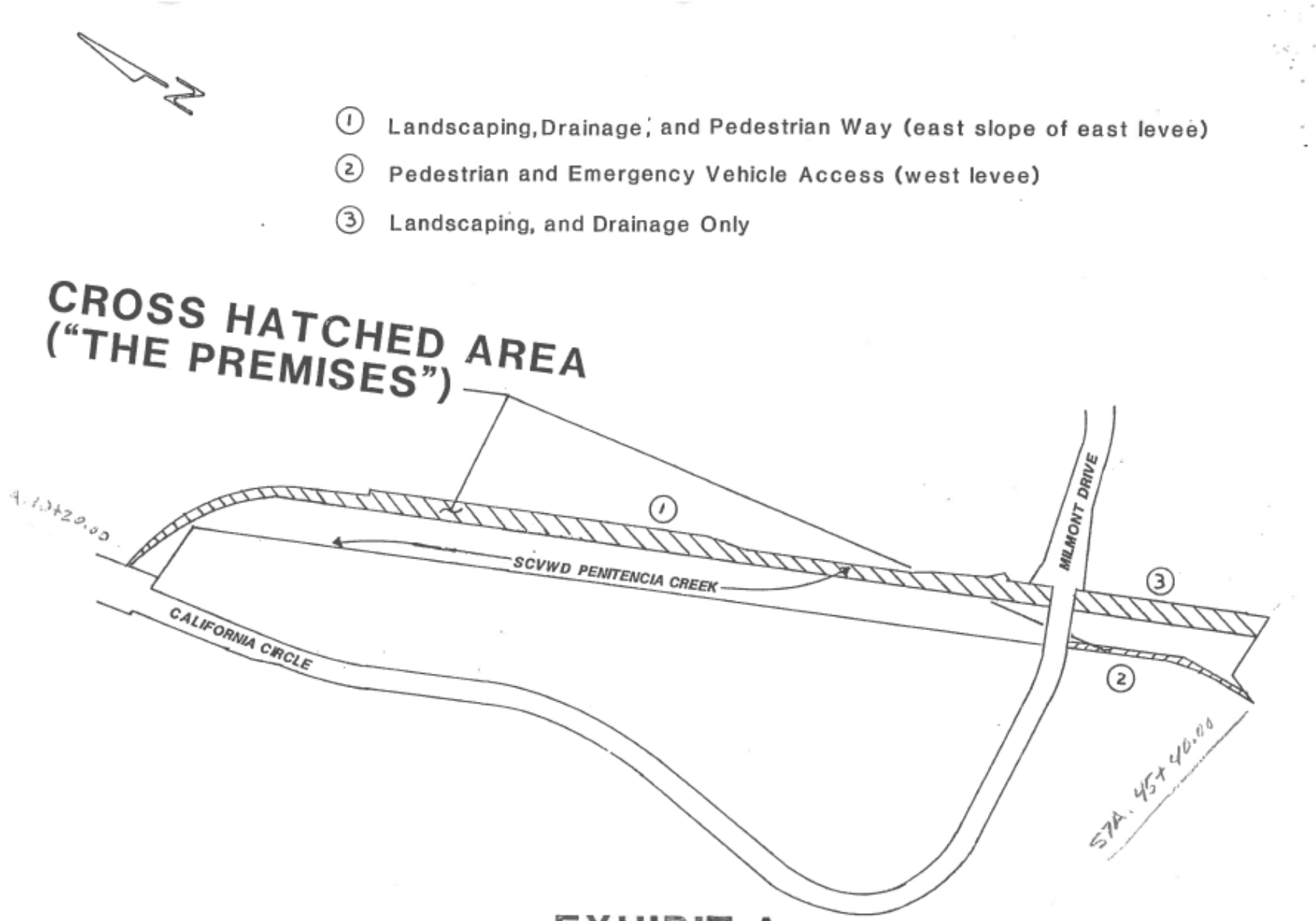

EXHIBIT A

File: A/C Leases
City of Milpitas
X-File: 4033-49

ADDENDUM TO LEASE AGREEMENT (JOINT USE) **SCVWD AGMNT. NO. A2001a**
Approved: 7th Jan, 1997

The following language shall be added to the Lease Agreement (Joint Use) dated July 19, 1996 between the Santa Clara Valley Water District, a public corporation, hereinafter referred to as "District," and the City of Milpitas, hereinafter referred to as "Lessee." The effective date of this addendum shall be the date of execution by the District's Chair/Board of Directors.

10. Lessee will encourage volunteer groups to participate in District's "Adopt-A-Creek" program as to the leased premises.

11. Native plants, selected by a qualified landscape architect and approved by District, shall be used for revegetation purposes by Lessee.

12. District and Lessee shall cooperate to create and install signage such as warnings, entrance signage, interpretive signs, and joint uses when applicable which benefits the programs of each party by identifying the respective interests in the particular facility. The General Manager of the District and the City Engineer of the City of Milpitas or their designees shall meet and confer on a periodic basis to approve appropriate signs which serve the needs of both parties.

13. The following language shall be added to clause 3 of said Lease Agreement (Joint Use): "For purposes of this agreement, the term 'maintenance' shall include immediate graffiti removal and/or abatement on any facility upon the premises for purposes of this Lease."

CITY OF MILPITAS

By: _____
"Lessee"
Lawrence Moore
City Manager

ATTEST: Gail Blalock

_____
City Clerk

APPROVED AS TO FORM:

_____
Dave Larsen, City Attorney

SANTA CLARA VALLEY WATER DISTRICT,
a public corporation

By: _____
Chair/Board of Directors
"District"

ATTEST: Lauren L. Keller

_____
Clerk/Board of Directors

APPROVED AS TO FORM:

_____
General Counsel

(Page 1 of 1)

5488agre.djf

EXHIBIT B
LPC Trail Agreement (continued)

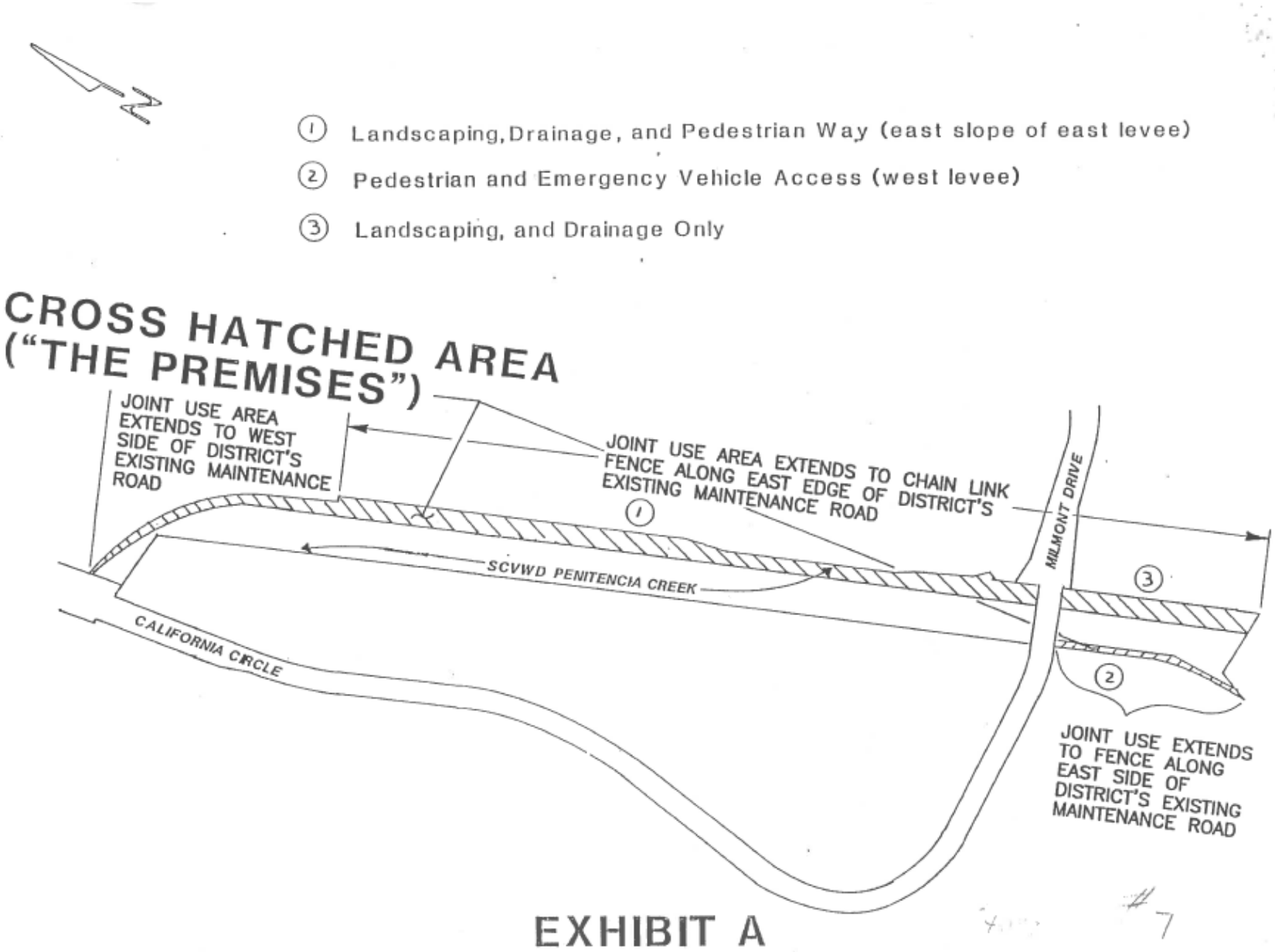

EXHIBIT B
LPC Trail Agreement (continued)

EXHIBIT C
LCC and LPC City Approved Drawings for Improvement Removal and Replacement

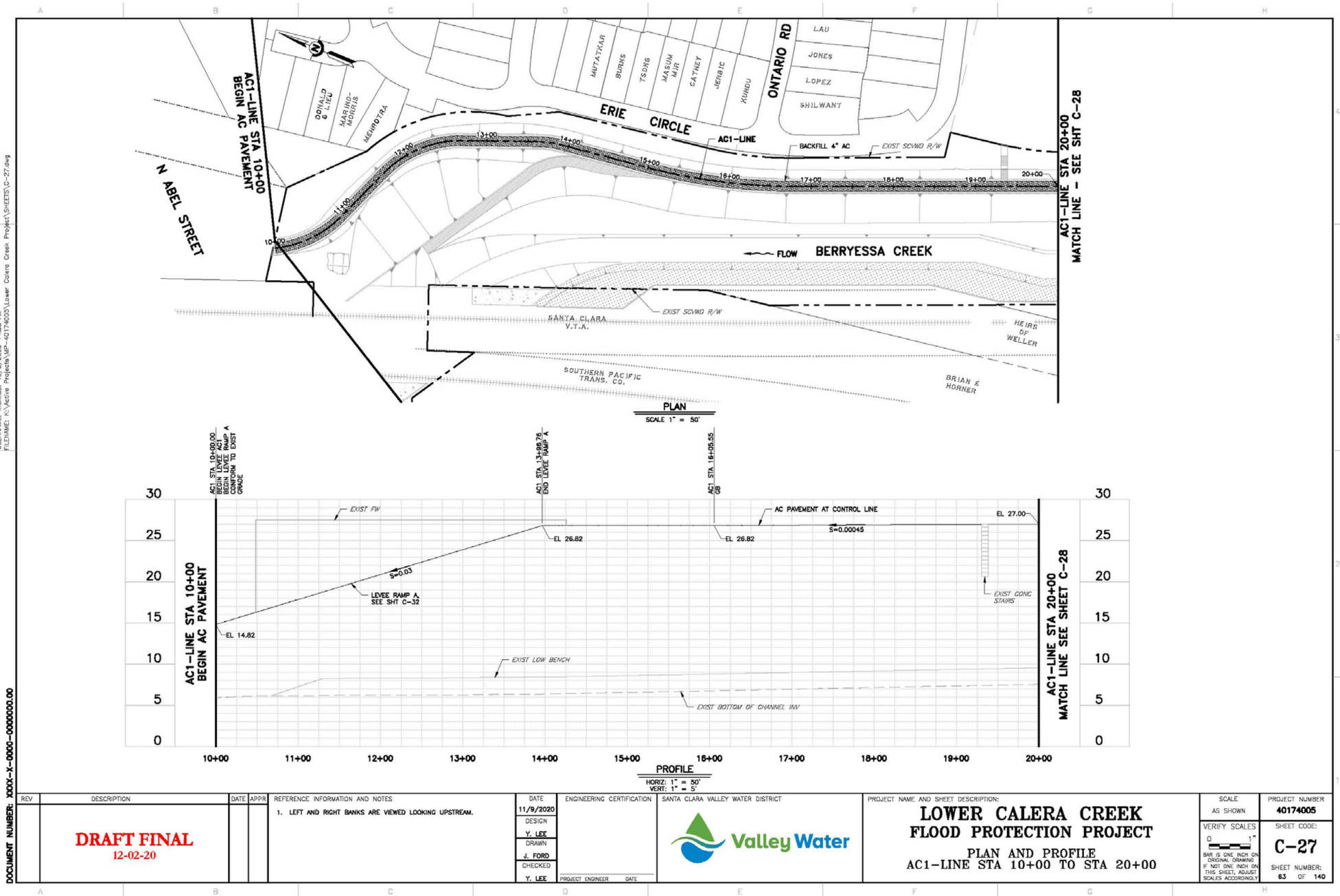

EXHIBIT C
LCC and LPC City Approved Drawings for Improvement Removal and Replacement (continued)

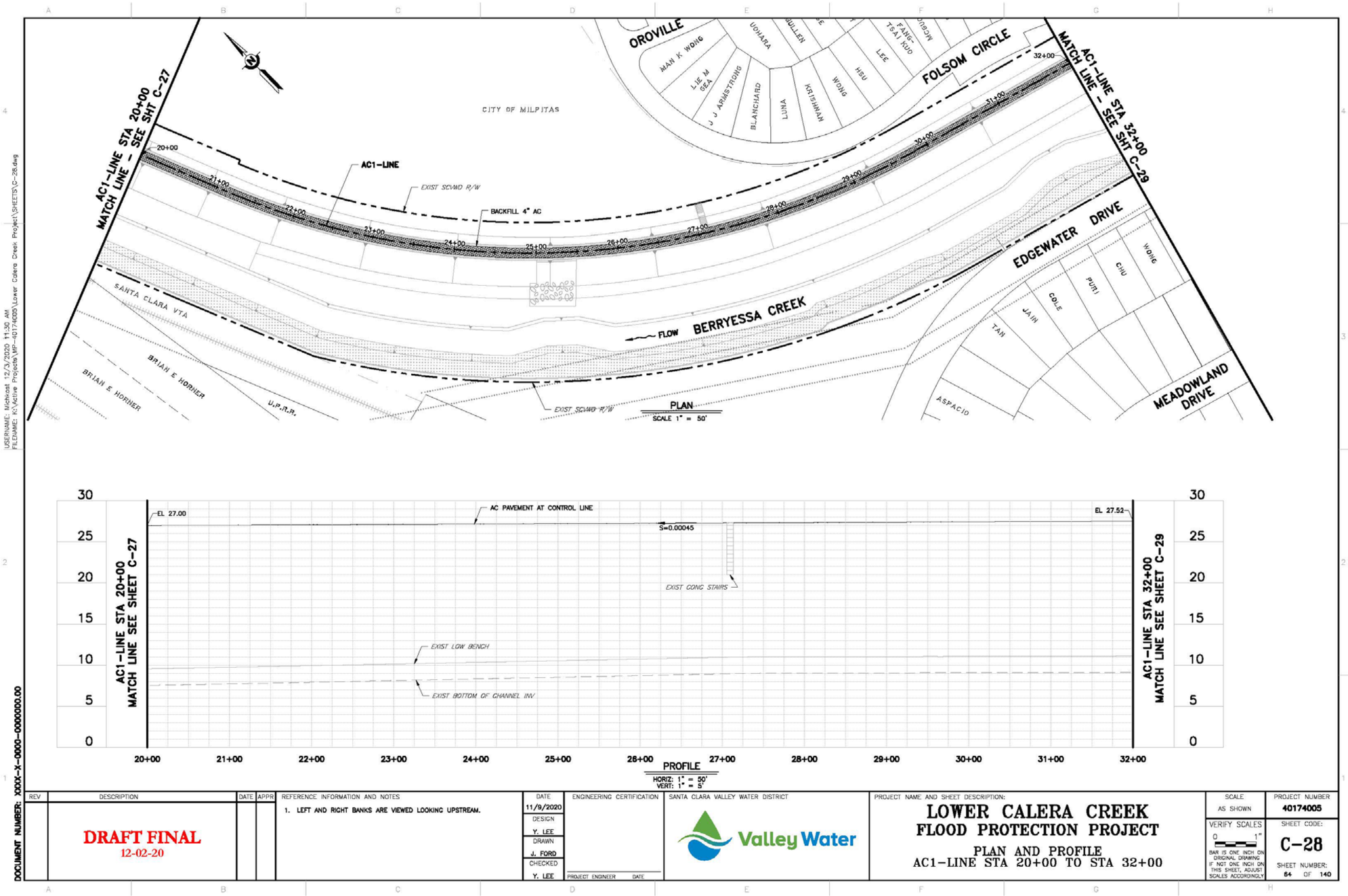

EXHIBIT C
LCC and LPC City Approved Drawings for Improvement Removal and Replacement (continued)

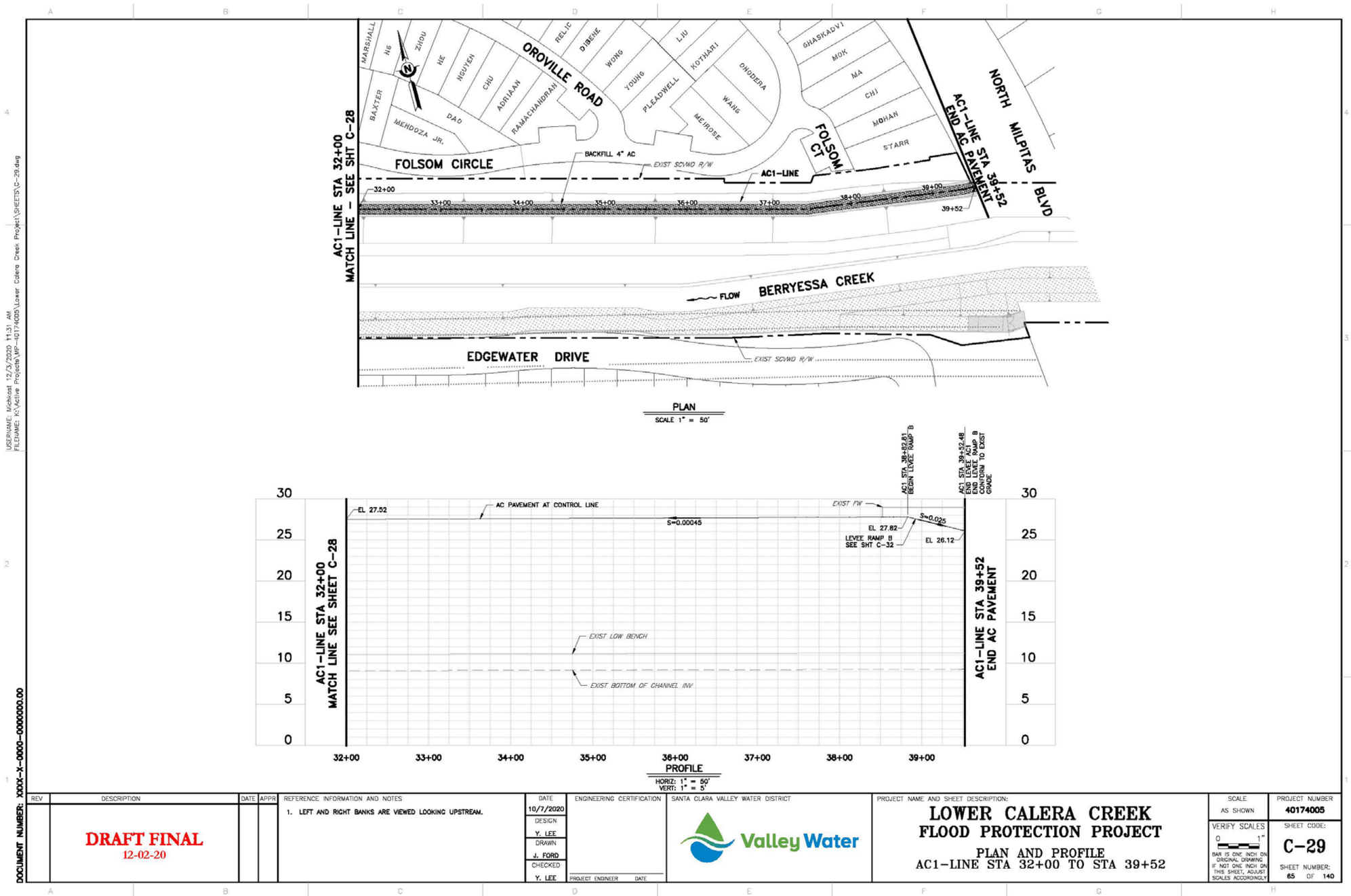

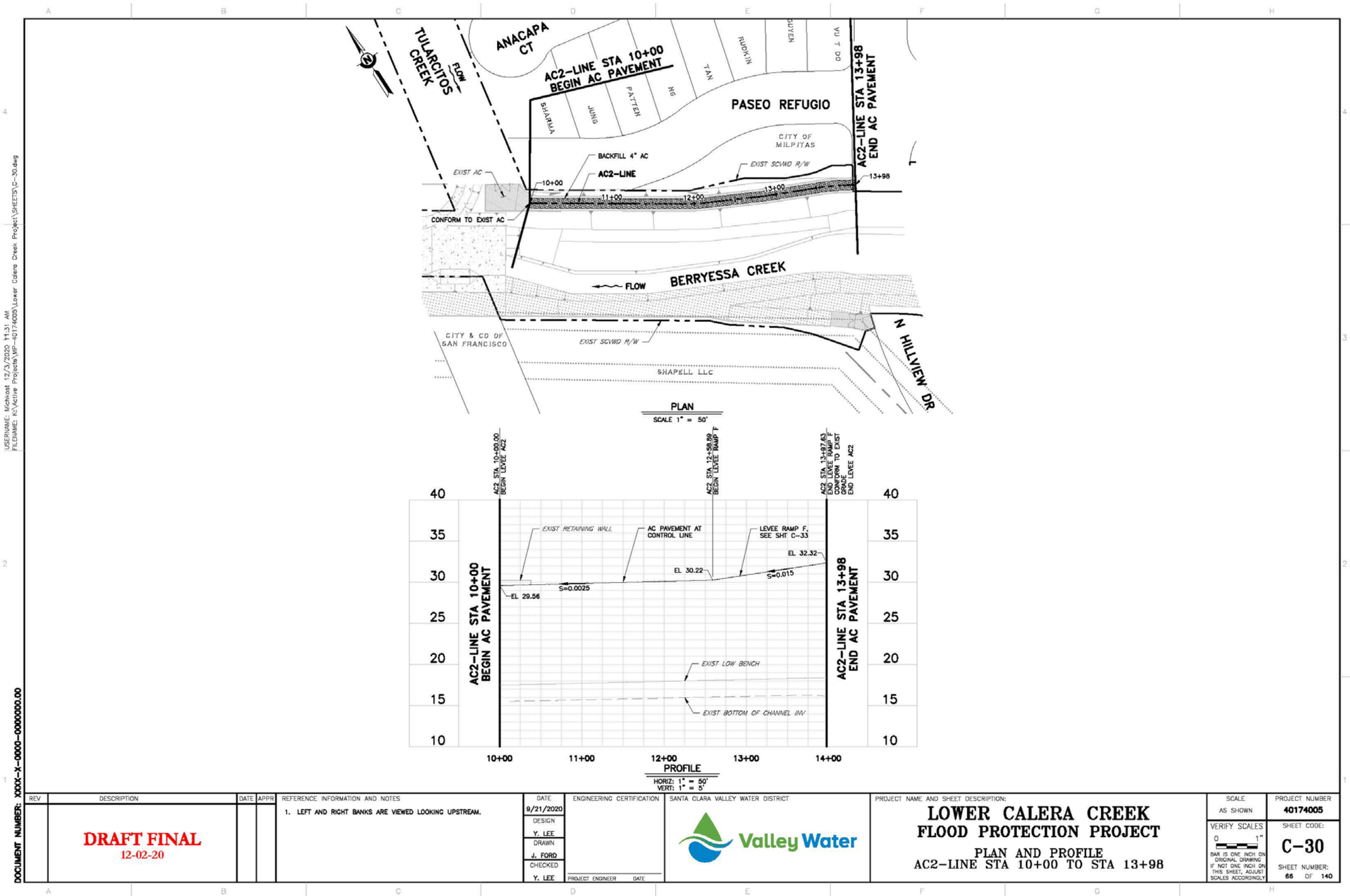
TULARCITOS CREEK
FLOW
ANACAPA CT
AC2-LINE STA 10+00 BEGIN AC PAVEMENT
SHARMA
JUNG
PATTEN
NG
TAN
RUDKIN
DUYEN
VU T DO
PASEO REFUGIO
CITY OF MILPITAS
AC2-LINE STA 13+98 END AC PAVEMENT
BACKFILL 4" AC
AC2-LINE
EXIST AC
EXIST SCVWD R/W
10+00
11+00
12+00
13+00
13+98
CONFORM TO EXIST AC
FLOW
BERRYESSA CREEK
CITY & CO OF SAN FRANCISCO
EXIST SCVWD R/W
SHAPELL LLC
N HILLVIEW DR.
PLAN
SCALE 1" = 50'
AC2 STA 10+00.00 BEGIN LEVEE AC2
AC2 STA 12+58.99 BEGIN LEVEE RAMP F
AC2 STA 13+97.63 END LEVEE RAMP F CONFORM TO EXIST GROUD END LEVEE AC2
EXIST RETAINING WALL
AC PAVEMENT AT CONTROL LINE
LEVEE RAMP F, SEE SHT C-33
EL 32.32
EL 30.22
S=0.015
S=0.0025
EL 29.56
EXIST LOW BENCH
EXIST BOTTOM OF CHANNEL INV
AC2-LINE STA 10+00 BEGIN AC PAVEMENT
AC2-LINE STA 13+98 END AC PAVEMENT
40
35
30
25
20
15
10
10+00
11+00
12+00
13+00
14+00
PROFILE
HORIZ: 1" = 50'
VERT: 1" = 5'
USERNAME: Midwest 12/3/2020 11:31 AM
FILENAME: K:\Active Projects\MP-40174005\Lower Calera Creek Project\SHEETS\C-30.dwg
DOCUMENT NUMBER: XXXX-X-0000-0000000.00
REV
DESCRIPTION
DATE
APPR
DRAFT FINAL
12-02-20
REFERENCE INFORMATION AND NOTES
1. LEFT AND RIGHT BANKS ARE VIEWED LOOKING UPSTREAM.
DATE
9/21/2020
DESIGN
Y. LEE
DRAWN
J. FORD
CHECKED
Y. LEE
ENGINEERING CERTIFICATION
PROJECT ENGINEER
DATE
SANTA CLARA VALLEY WATER DISTRICT
Valley Water
PROJECT NAME AND SHEET DESCRIPTION:
LOWER CALERA CREEK
FLOOD PROTECTION PROJECT
PLAN AND PROFILE
AC2-LINE STA 10+00 TO STA 13+98
SCALE
AS SHOWN
VERIFY SCALES
0
1"
BAR IS ONE INCH ON ORIGINAL DRAWING IF NOT ONE INCH ON THIS SHEET, ADJUST SCALES ACCORDINGLY
PROJECT NUMBER
40174005
SHEET CODE:
C-30
SHEET NUMBER:
66 OF 140

EXHIBIT C
LCC and LPC City Approved Drawings for Improvement Removal and Replacement (continued)

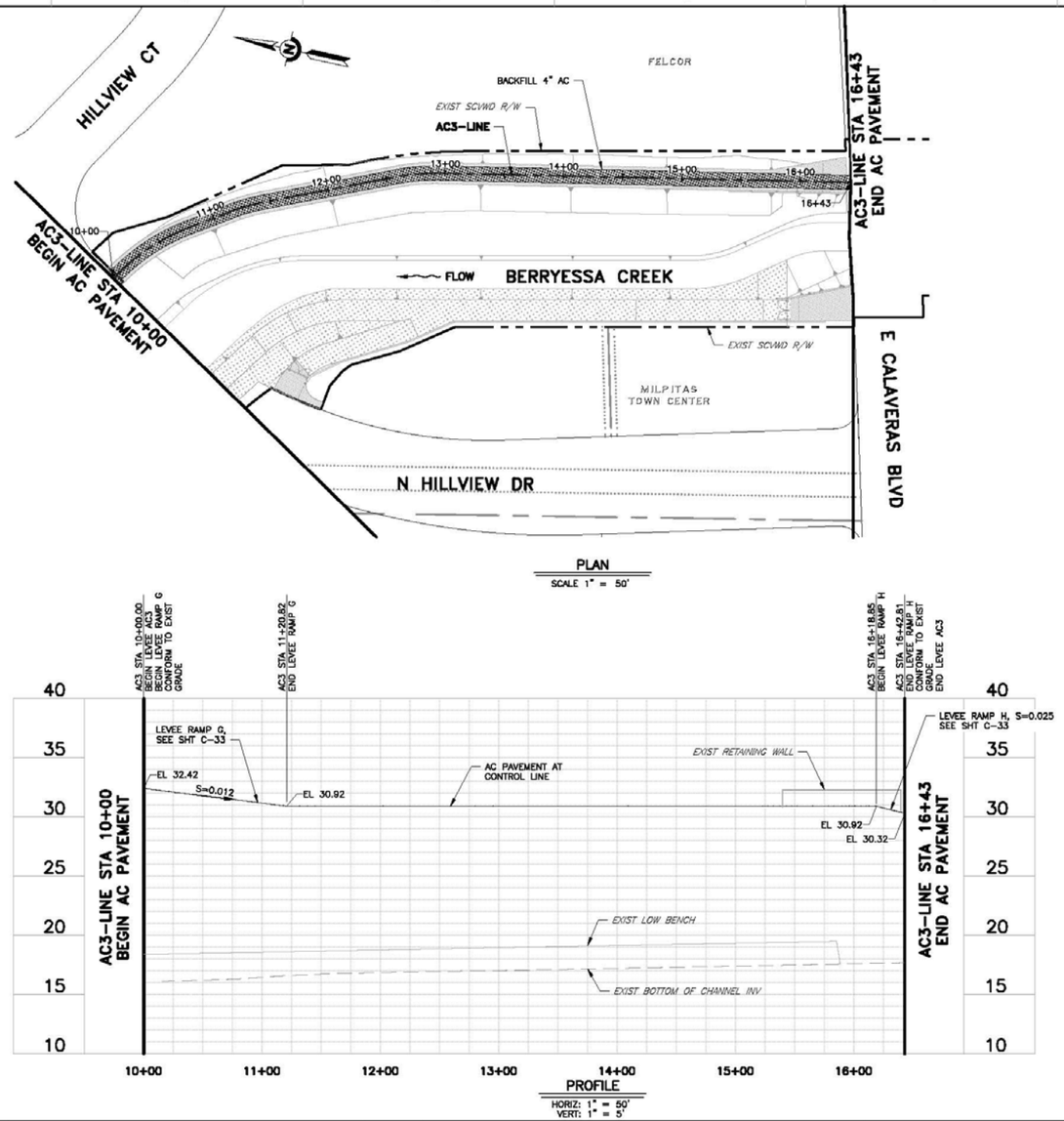

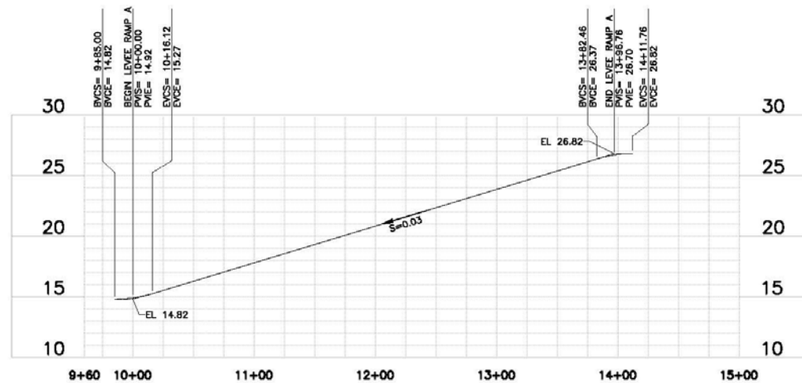

PROFILE – LEVEE RAMP A

HORIZ: 1" = 50'
VERT: 1" = 5'

LEVEE RAMP A PROFILE (LT BANK, ACCESS ROAD)		
STATION (AC1)	EL	NOTE
9+85	14.82	BVC
9+90	14.83	VERTICAL CURVE L=31.12'
9+95	14.87	
10+00	14.92	
10+05.37	15.01	
10+10.75	15.13	
10+16.12	15.27	EVC
10+16.12 TO 13+82.46		S=0.03
13+82.46	26.37	BVC
13+87.23	26.50	VERTICAL CURVE L=29.3'
13+91.99	26.61	
13+96.76	26.70	
14+01.76	26.77	
14+06.76	26.81	
14+11.76	26.82	EVC

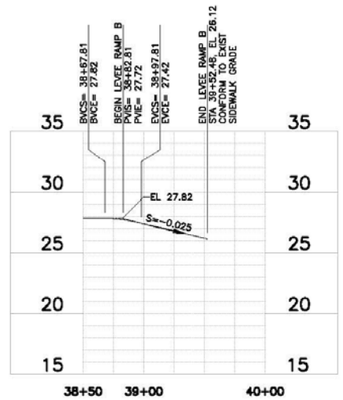

PROFILE – LEVEE RAMP B

HORIZ: 1" = 50'
VERT: 1" = 5'

LEVEE RAMP B PROFILE (LT BANK, N. MILPITAS BLVD, D/S)		
STATION (AC1)	EL	NOTE
38+67.81	27.82	BVC
38+72.81	27.81	VERTICAL CURVE L=30'
38+77.81	27.78	
38+82.81	27.72	
38+87.81	27.64	
38+92.81	27.54	
38+97.81	27.42	EVC
38+97.81 TO 39+52.48		S=-0.025
39+52.48	26.12	END RAMP

USERNAME: Jenniford 12/3/2020 11:31 AM
FILENAME: K:\Active Projects\MP-40174005\Lower Calera Creek Project\SHEETS\C-32.dwg

DOCUMENT NUMBER: XXXX-X-0000-0000000.00

REV	DESCRIPTION	DATE	APPR	REFERENCE INFORMATION AND NOTES	DATE 11/9/2020	ENGINEERING CERTIFICATION	SANTA CLARA VALLEY WATER DISTRICT	PROJECT NAME AND SHEET DESCRIPTION:	SCALE AS SHOWN	PROJECT NUMBER 40174005
	DRAFT FINAL 12-02-20				DESIGN Y. LEE		Valley Water	LOWER CALERA CREEK FLOOD PROTECTION PROJECT	VERIFY SCALES 0 1" BAR IS ONE INCH ON ORIGINAL DRAWING IF NOT ONE INCH ON THIS SHEET, ADJUST SCALES ACCORDINGLY	SHEET CODE: C-32
					DRAWN J. FORD			LEVEE RAMP PROFILES AND TABLES		SHEET NUMBER: 68 OF 140
					CHECKED Y. LEE	PROJECT ENGINEER DATE				

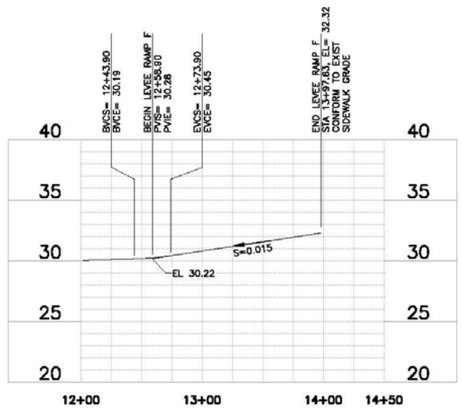

PROFILE – LEVEE RAMP F

HORIZ: 1" = 50'
VERT: 1" = 5'

LEVEE RAMP F PROFILE (LT BANK, N. HILLVIEW DR, D/S)		
STATION (AC2)	EL	NOTE
12+43.90	30.19	BVC
12+48.90	30.21	VERTICAL CURVE L=30'
12+53.90	30.24	
12+58.90	30.28	
12+63.90	30.33	
12+68.90	30.39	
12+73.90	30.45	EVC
12+73.90 TO 13+97.63		S=0.015
13+97.63	32.32	END RAMP

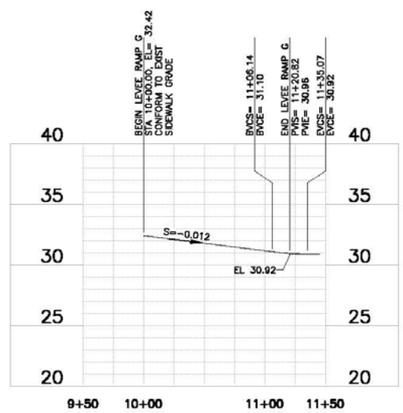

PROFILE – LEVEE RAMP G

HORIZ: 1" = 50'
VERT: 1" = 5'

LEVEE RAMP G PROFILE (LT BANK, N. HILLVIEW DR, U/S)		
STATION (AC3)	EL.	NOTE
10+00	32.42	BEGIN RAMP
10+00 TO 11+06.14		S=-0.012
11+06.14	31.10	BVC
11+11.03	31.04	VERTICAL CURVE L=28.93'
11+15.93	31.00	
11+20.82	30.96	
11+25.57	30.94	
11+30.32	30.92	
11+35.07	30.92	EVC

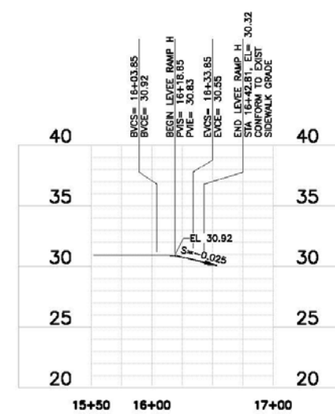

PROFILE – LEVEE RAMP H

HORIZ: 1" = 50'
VERT: 1" = 5'

LEVEE RAMP H PROFILE (LT BANK, E. CALAVERAS BLVD, D/S)		
STATION (AC3)	EL.	NOTE
16+03.85	30.92	BVC
16+08.85	30.91	VERTICAL CURVE L=30'
16+13.85	30.88	
16+18.85	30.83	
16+23.85	30.75	
16+28.85	30.66	
16+33.85	30.55	EVC
16+33.85 TO 16+42.81		S=-0.025
16+42.81	30.32	END RAMP

USERNAME: Jenniferd 12/3/2020 11:32 AM
FILENAME: K:\Active Projects\MP-40174005\Lower Calera Creek Project\SHEETS\C-33.dwg

DOCUMENT NUMBER: XXXX-X-0000-0000000.00

REV	DESCRIPTION	DATE	APPR	REFERENCE INFORMATION AND NOTES
	DRAFT FINAL 12-02-20			

DATE 9/21/2020
DESIGN Y. LEE
DRAWN J. FORD
CHECKED Y. LEE

ENGINEERING CERTIFICATION
PROJECT ENGINEER DATE

SANTA CLARA VALLEY WATER DISTRICT
Valley Water

PROJECT NAME AND SHEET DESCRIPTION:
LOWER CALERA CREEK
FLOOD PROTECTION PROJECT
LEVEE RAMP
PROFILES AND TABLES

SCALE AS SHOWN
VERIFY SCALES 0 1"
BAR IS ONE INCH ON ORIGINAL DRAWING IF NOT ONE INCH ON THIS SHEET, ADJUST SCALES ACCORDINGLY

PROJECT NUMBER 40174005
SHEET CODE: C-33
SHEET NUMBER: 69 OF 140

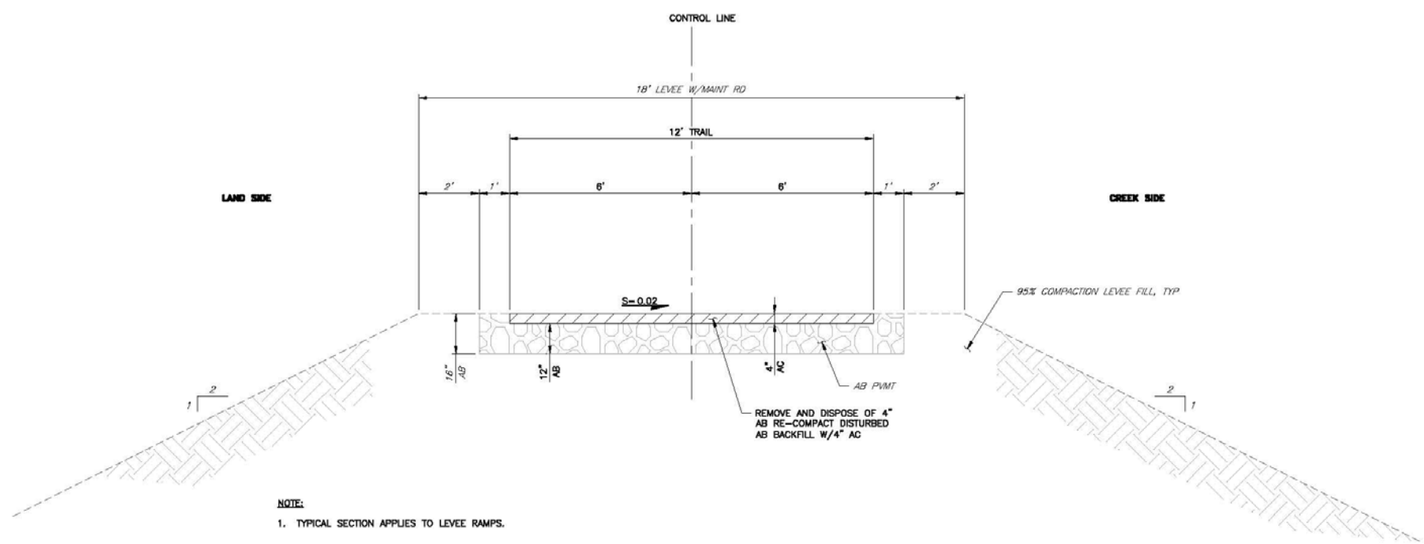

NOTE:

1. TYPICAL SECTION APPLIES TO LEVEE RAMPS.

DETAIL 1 – LT BANK TYPICAL AC REPLACEMENT
(AC1 STA 10+00 TO STA 39+52)
(AC2 STA 10+00 TO STA 13+98)
(AC3 STA 10+00 TO STA 16+43)
SCALE: 1/2" = 1'-0"

DOCUMENT NUMBER: XXXX-X-0000-0000000.00

USERNAME: Jennford 12/3/2020 11:32 AM
FILENAME: K:\Active Projects\MP-40174005\Lower Calera Creek Project\SHEETS\C-34.dwg

REV	DESCRIPTION	DATE	APPR	REFERENCE INFORMATION AND NOTES	DATE	ENGINEERING CERTIFICATION	SANTA CLARA VALLEY WATER DISTRICT	PROJECT NAME AND SHEET DESCRIPTION:	SCALE	PROJECT NUMBER
	DRAFT FINAL 12-02-20				9/21/2020 DESIGN Y. LEE DRAWN J. FORD CHECKED Y. LEE	PROJECT ENGINEER DATE	Valley Water	LOWER CALERA CREEK FLOOD PROTECTION PROJECT MAINTENANCE ROAD AC PAVING DETAIL	AS SHOWN VERIFY SCALES 0 1" BAR IS ONE INCH ON ORIGINAL DRAWING IF NOT ONE INCH ON THIS SHEET, ADJUST SCALES ACCORDINGLY	40174005 SHEET CODE: C-34 SHEET NUMBER: 70 OF 140

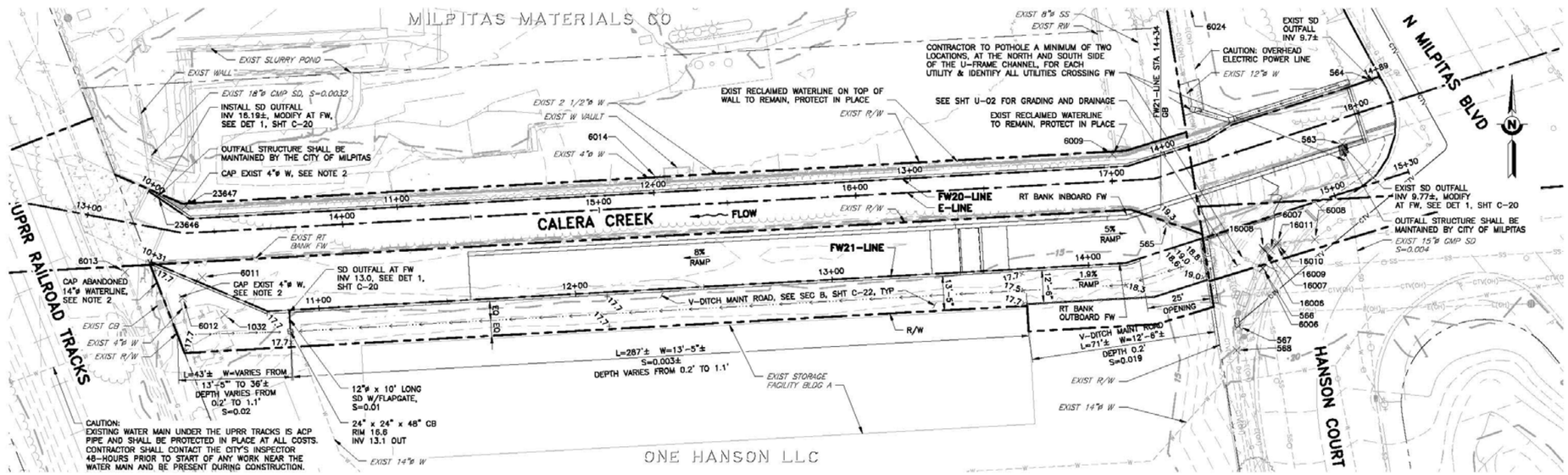

DETAIL 1 / C-01 UTILITY RELOCATION
SCALE: 1" = 20'

POINT TABLE

POINT	NORTHING	EASTING	ELEVATION	DESCRIPTION
563	1988007.1390	6152664.0010	INV 9.8	SD CMP
564	1988031.8890	6152675.7950	INV 9.7	SD RCP
565	1987976.2940	6152595.6220	8.2	8" SS
566	1987958.9530	6152633.0690	6.6	8" SS
567	1987936.4970	6152623.6480	6.8	12" W
568	1987927.0970	6152622.9210	7.3	12" W
1032	1987940.9260	6152228.9200	13.8	REBAR & PLUG SET BY EXARO
6006	1987959.0620	6152633.1140	21.1	SSMH
6007	1987965.9320	6152636.2360	16.2	E
6008	1987970.1640	6152653.4100	18.5	4" PG&E GAS
6009	1988003.2550	6152574.5320	12.0	4" W
6011	1987955.4990	6152220.3280	7.2	4" W
6012	1987947.3400	6152212.7310	10.0	4" W
6013	1987957.3930	6152190.2670	7.8	8" G (CHEVRON)
6014	1987993.9780	6152397.2950	13.0	4" W
6024	1988164.8620	6152572.6810	16.5	12" WV
16006	1987965.6570	6152633.8260	16.6	4" E
16007	1987966.1560	6152633.4700	16.8	4" FO
16008	1987966.6950	6152633.1750	17.0	2" G
16009	1987967.9070	6152638.2060	17.5	4" E
16010	1987968.5520	6152638.6190	17.5	4" FO
16011	1987968.9760	6152638.8900	17.6	2" G
23646	1987987.2250	6152203.0550	16.2	SD CMP
23647	1987983.1509	6152213.8212		4" W TIE IN

NOTE:
EXCEPT WHERE SHOWN AS INV, ALL ELEVATIONS ARE TO TOP OF PIPE.

NOTES:
1. CITY OF MILPITAS AND MILPITAS MATERIALS COMPANY SHALL BE NOTIFIED 72 HOURS IN ADVANCE OF WATERLINE WORK.
2. CONTRACTOR SHALL POTHOLE TO CONFIRM TIE-IN LOCATIONS, SIZE OF EXISTING PIPE, AND EXISTING PIPE MATERIAL IN ADVANCE OF UTILITY LINE WORK.

CAUTION:
CAUTION SHOULD BE TAKEN WHILE WORKING ON U-FRAME CHANNEL. UTILITY LINE CROSSINGS UNDER U-FRAME CHANNEL.

USERNAME: Jennford 12/3/2020 12:45 PM
FILENAME: K:\Active Projects\MP-40174005\Lower Calera Creek Project\SHEETS\U-01.dwg

DOCUMENT NUMBER: XXXX-X-0000-0000000.00

REV	DESCRIPTION	DATE	APPR	REFERENCE INFORMATION AND NOTES
	DRAFT FINAL 12-02-20			

DATE 11/18/2020
DESIGN Y. LEE
DRAWN R. STILL
CHECKED Y. LEE

ENGINEERING CERTIFICATION
PROJECT ENGINEER DATE

SANTA CLARA VALLEY WATER DISTRICT
Valley Water

PROJECT NAME AND SHEET DESCRIPTION:
LOWER CALERA CREEK FLOOD PROTECTION PROJECT
UPRR TO NORTH MILPITAS BOULEVARD GRADING AND DRAINAGE

SCALE: AS SHOWN
VERIFY SCALES: 0 — 1"
BAR IS ONE INCH ON ORIGINAL DRAWING IF NOT ONE INCH ON THIS SHEET, ADJUST SCALES ACCORDINGLY

PROJECT NUMBER 40174005
SHEET CODE: U-01
SHEET NUMBER: 71 OF 140

EXHIBIT C
LCC and LPC City Approved Drawings for Improvement Removal and Replacement (continued)

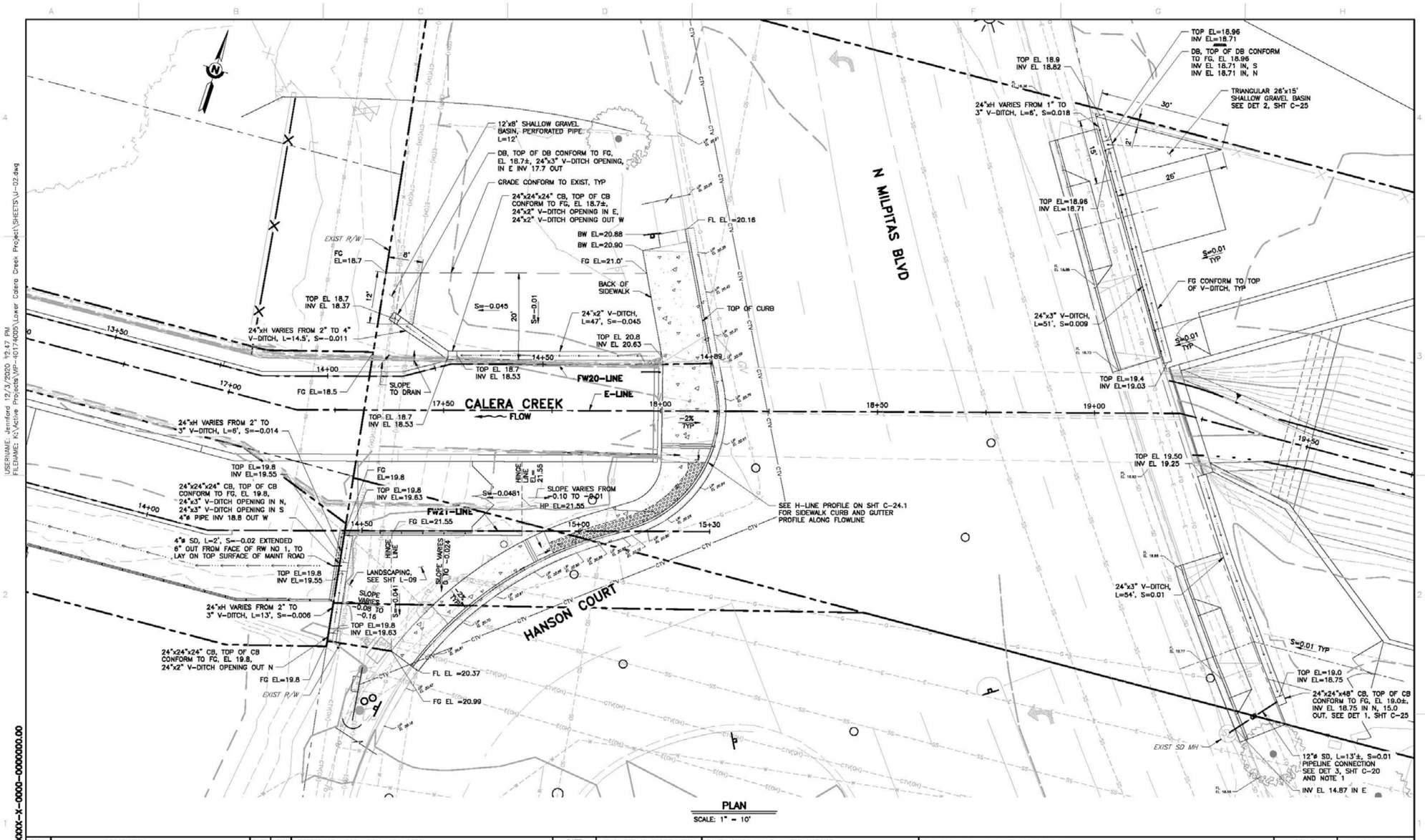

EXHIBIT C
LCC and LPC City Approved Drawings for Improvement Removal and Replacement (continued)

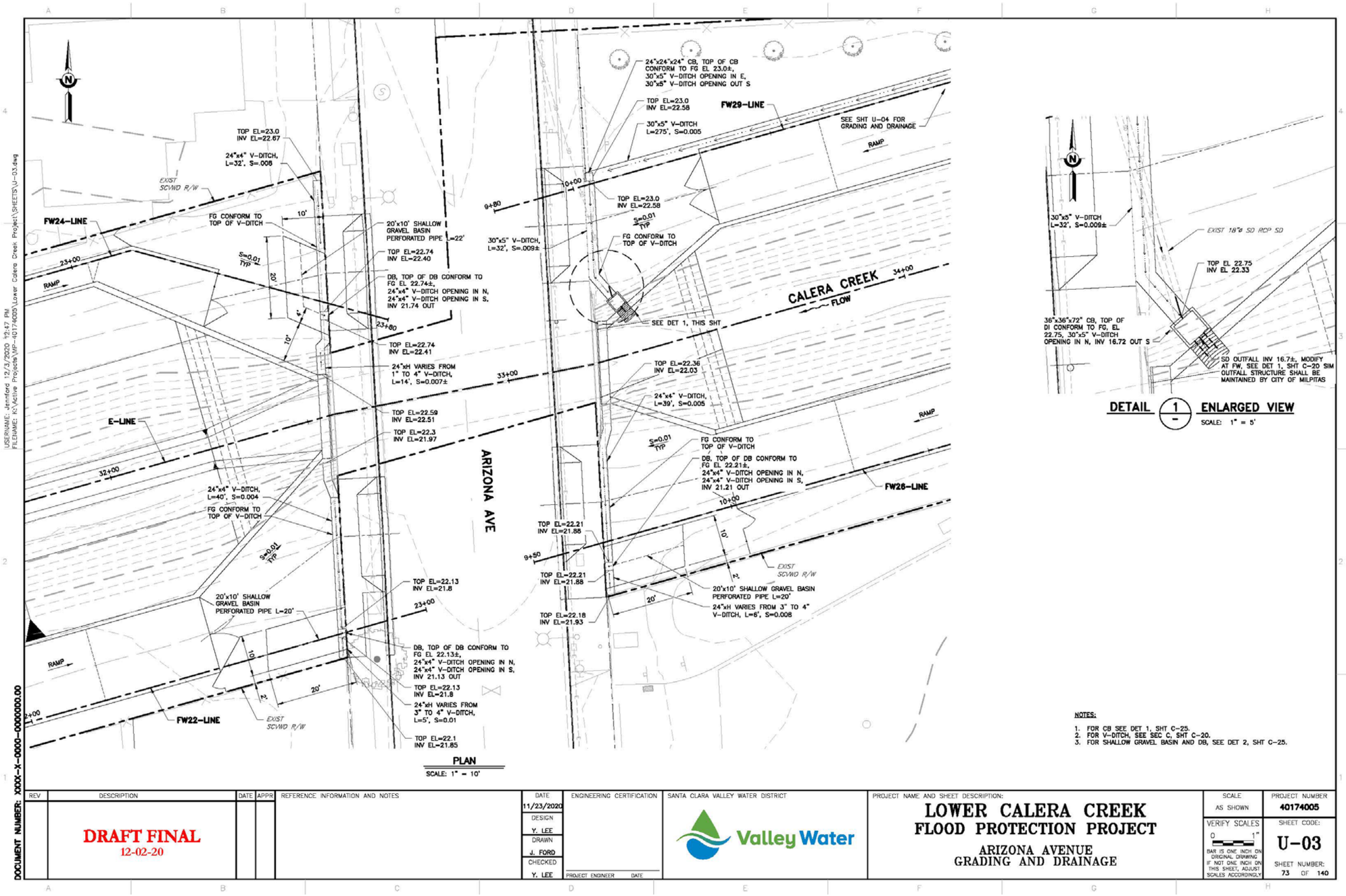

EXHIBIT C
LCC and LPC City Approved Drawings for Improvement Removal and Replacement (continued)

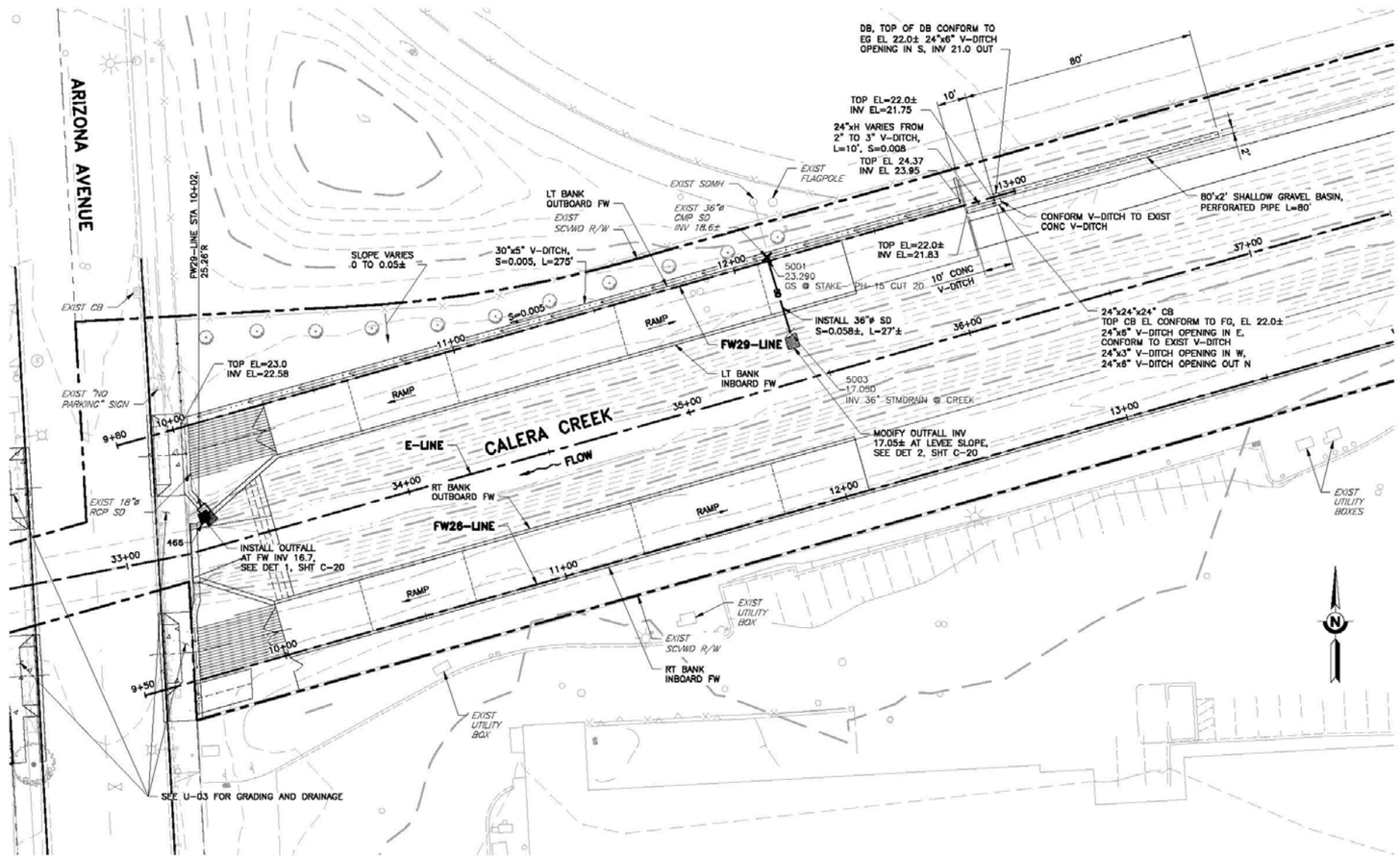

NOTES:

1. FOR V-DITCH, SEE SEC C, SHT C-20.
2. FOR SHALLOW GRAVEL BASIN AND DB, SEE DET 2, SHT C-25.

DETAIL 1 (C-08) UTILITY RELOCATION
SCALE: 1" = 20'
C-17

POINT TABLE

POINT	NORTHING	EASTING	DESCRIPTION
466	1988634.9070	6153992.1240	CMP
5001	1988724.7500	6154184.9600	GS @ STAKE-- PH-15 CUT 20
5003	1988699.0000	6154193.0000	INV 36" STMDRAIN @ CREEK

USERNAME: Jennford 12/3/2020 12:47 PM
FILENAME: K:\Active Projects\MP-40174005\Lower Calera Creek Project\SHEETS\U-04.dwg

DOCUMENT NUMBER: XXXX-X-0000-00000000.00

REV	DESCRIPTION	DATE	APPR	REFERENCE INFORMATION AND NOTES
	DRAFT FINAL 12-02-20			

DATE 11/12/2020
DESIGN Y. LEE
DRAWN R. STILL
CHECKED Y. LEE

ENGINEERING CERTIFICATION
PROJECT ENGINEER DATE

SANTA CLARA VALLEY WATER DISTRICT
Valley Water

PROJECT NAME AND SHEET DESCRIPTION:
LOWER CALERA CREEK
FLOOD PROTECTION PROJECT
ARIZONA AVENUE UPSTREAM
GRADING AND DRAINAGE

SCALE AS SHOWN
VERIFY SCALES 0 1"
BAR IS ONE INCH ON ORIGINAL DRAWING IF NOT ONE INCH ON THIS SHEET, ADJUST SCALES ACCORDINGLY

PROJECT NUMBER 40174005
SHEET CODE: U-04
SHEET NUMBER: 74 OF 140

TREE TABLE						
TREE #	STA	TRUNK CIRCUMFERENCE (INCHES)	DBH (INCHES)	SPECIES	COMMON NAME	NOTE
1078	04+90	21,19,19 16,14,12,11	32	ULMUS SP.	ELM	REMOVE
1079	07+80	13	4	ACER SP.	MAPLE	REMOVE
1080	10+40	21,10,10	13	--	UNIDENTIFIED	REMOVE
1081	10+40	21,16,16	17	MYOPORUM LAETUM	MYOPORUM	REMOVE

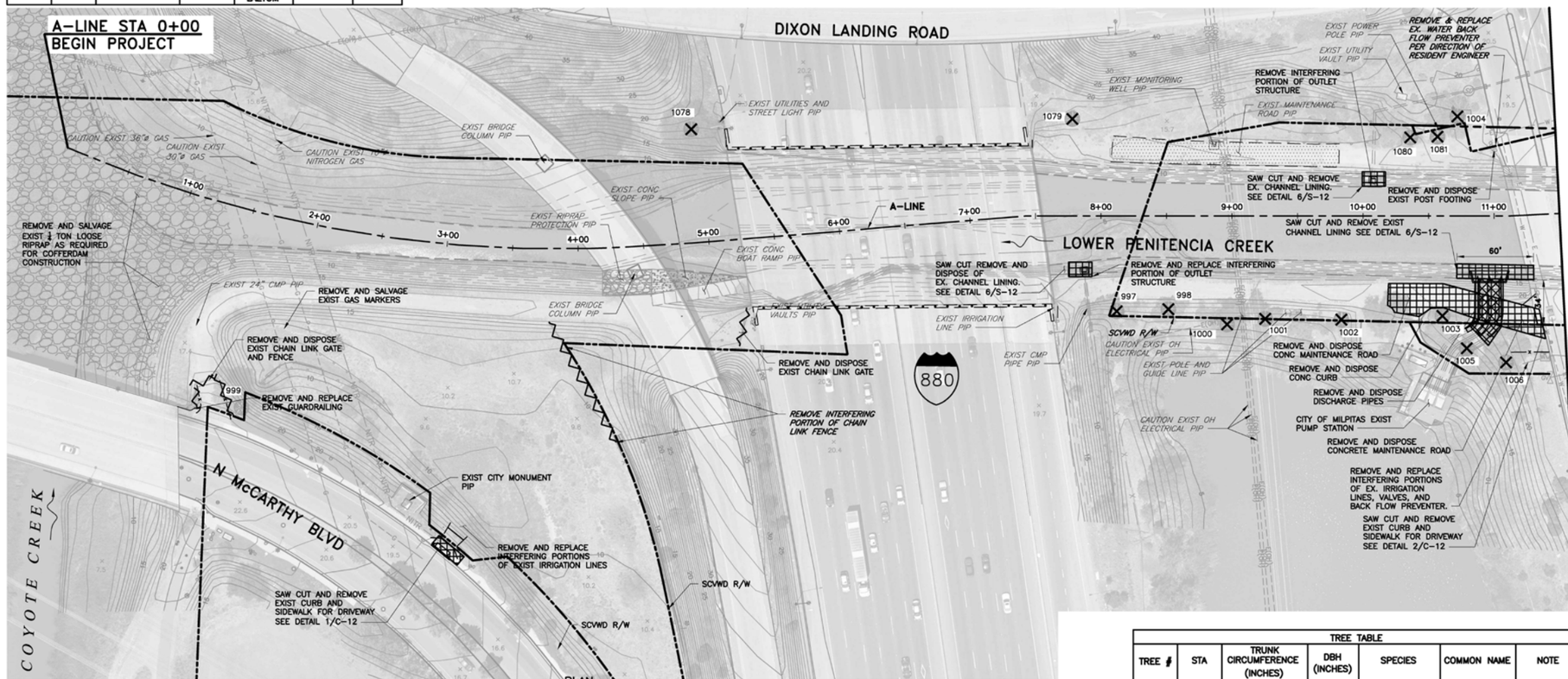

PLAN
SCALE 1" = 40'

DEMOLITION NOTES

1. ALL UTILITIES NOT NOTED TO BE REMOVED, RELOCATED OR ABANDONED SHALL BE PROTECTED IN PLACE.
2. ALL UTILITY RELOCATIONS ARE THE RESPONSIBILITY OF THE CONTRACTOR.
3. ALL TREES NOT CALLED OUT FOR REMOVAL SHALL BE PROTECTED IN PLACE.
4. SOME TREES NOT SHOWN FOR REMOVAL WILL REQUIRE TRIMMING TO ACCOMMODATE SHEET PILE WALL CONSTRUCTION.
5. TREE REMOVAL PERMIT IS REQUIRED FROM THE CITY FOR ANY TREE REMOVAL WITHIN CITY RIGHT-OF-WAY. THIS PERMIT MUST BE OBTAINED PRIOR TO ISSUANCE OF CITY ENCROACHMENT PERMIT.
6. REFER TO CITY STD DWG 734 WHEN REPLACING BACKFLOW PREVENTERS.

LEGEND

- EXIST MAINTENANCE ROAD (PIP)
- TREE/BRUSH REMOVAL
- REMOVE EXIST FENCE
- TREE/BUSH PROTECTION IN PLACE
- REMOVE AND DISPOSE OF EXIST AC ROADWAY
- REMOVE AND DISPOSE OF EXIST CONCRETE
- REMOVE AND DISPOSE OF EXIST ARTICULATED BLOCKS
- REMOVE AND DISPOSE OF EXIST DISCHARGE PIPES

TREE TABLE						
TREE #	STA	TRUNK CIRCUMFERENCE (INCHES)	DBH (INCHES)	SPECIES	COMMON NAME	NOTE
997	8+10	–	–	UNKNOWN	UNKNOWN	REMOVE
998	8+50	–	–	UNKNOWN	UNKNOWN	REMOVE
999	1+50	–	–	UNKNOWN	UNKNOWN	PROTECT
1000	08+90	40	13	EUCALYPTUS SP.	EUCALYPTUS	REMOVE
1001	09+40	39	12	EUCALYPTUS SP.	EUCALYPTUS	REMOVE
1002	09+90	45	14	EUCALYPTUS SP.	EUCALYPTUS	REMOVE
1003	10+60	40	13	SCHINUS MOLLE	CALIFORNIA PEPPER TREE	REMOVE
1004	10+70	85	27	FRAXINUS SP.	ASH	REMOVE
1005	10+80	30	10	EUCALYPTUS SP.	EUCALYPTUS	REMOVE – DEAD
1006	11+10	60	19	EUCALYPTUS SP.	EUCALYPTUS	REMOVE

USERNAME: ERIC.OLEA 11/20/2020 12:31 PM
FILENAME: P:\Wat\T35945 Lower Penitencia Creek\04 Design\Sheets\D-01.dwg
DOCUMENT NUMBER: XXXX-X-0000-0000000.00

REV	DESCRIPTION	DATE	APPR.
	FINAL 11/20/2020		

REFERENCE INFORMATION AND NOTES
1. AERIAL PHOTOGRAPHY WAS TAKEN SEPTEMBER 15, 2019

TETRA TECH
17885 VON KARMAN AVE., SUITE 500
IRVINE, CA 92614

DATE 5/23/2019
DESIGN AWG
DRAWN AWG
CHECKED YHC

ENGINEERING CERTIFICATION
REGISTERED PROFESSIONAL ENGINEER ERIC TORRESON NO. 66068 EXP. 6-30-20 CIVIL STATE OF CALIFORNIA
PROJECT ENGINEER DATE

SANTA CLARA VALLEY WATER DISTRICT
Valley Water
PROJECT ENGINEER ACCEPTED BY DISTRICT DATE

PROJECT NAME AND SHEET DESCRIPTION:
LOWER PENITENCIA CREEK IMPROVEMENTS PROJECT
DEMOLITION PLAN
A-LINE STA 0+00 TO STA 11+50

SCALE: AS SHOWN
VERIFY SCALES: 0 1" BAR IS ONE INCH ON ORIGINAL DRAWING IF NOT ONE INCH ON THIS SHEET, ADJUST SCALES ACCORDINGLY
PROJECT NUMBER: 40334005
SHEET CODE: D-01
SHEET NUMBER: 17 OF 90

EXHIBIT C
LCC and LPC City Approved Drawings for Improvement Removal and Replacement (continued)

TREE TABLE						
TREE #	STA	TRUNK CIRCUMFERENCE (INCHES)	DBH (INCHES)	SPECIES	COMMON NAME	NOTE
1007	11+90	40	13	ACACIA MELANOXYLON	BLACKWOOD ACACIA	REMOVE
1010	13+00	38.5	12	SEQUIOA SEMPERVIRENS	REDWOOD	PROTECT
1011	13+40	46	15	SEQUIOA SEMPERVIRENS	REDWOOD	PROTECT
1012	13+40	12	4	MYOPORUM LAETUM	MYOPORUM	REMOVE
1013	13+60	40	13	EUCALYPTUS SP.	EUCALYPTUS	PROTECT
1014	13+80	62	20	SEQUIOA SEMPERVIRENS	REDWOOD	REMOVE
1015	13+75	24	8	MYOPORUM LAETUM	MYOPORUM	REMOVE
1016	14+00	20	6	MYOPORUM LAETUM	MYOPORUM	REMOVE
1017	18+20	13	4	--	UNIDENTIFIED SHRUB	REMOVE
1018	18+40	13	4	--	UNIDENTIFIED SHRUB	REMOVE
2000–2005	--	--	--	--	--	PROTECT
2006	21+20	36	--	POPULUS FREMONTII	FREMONT COTTONWOOD	PROTECT

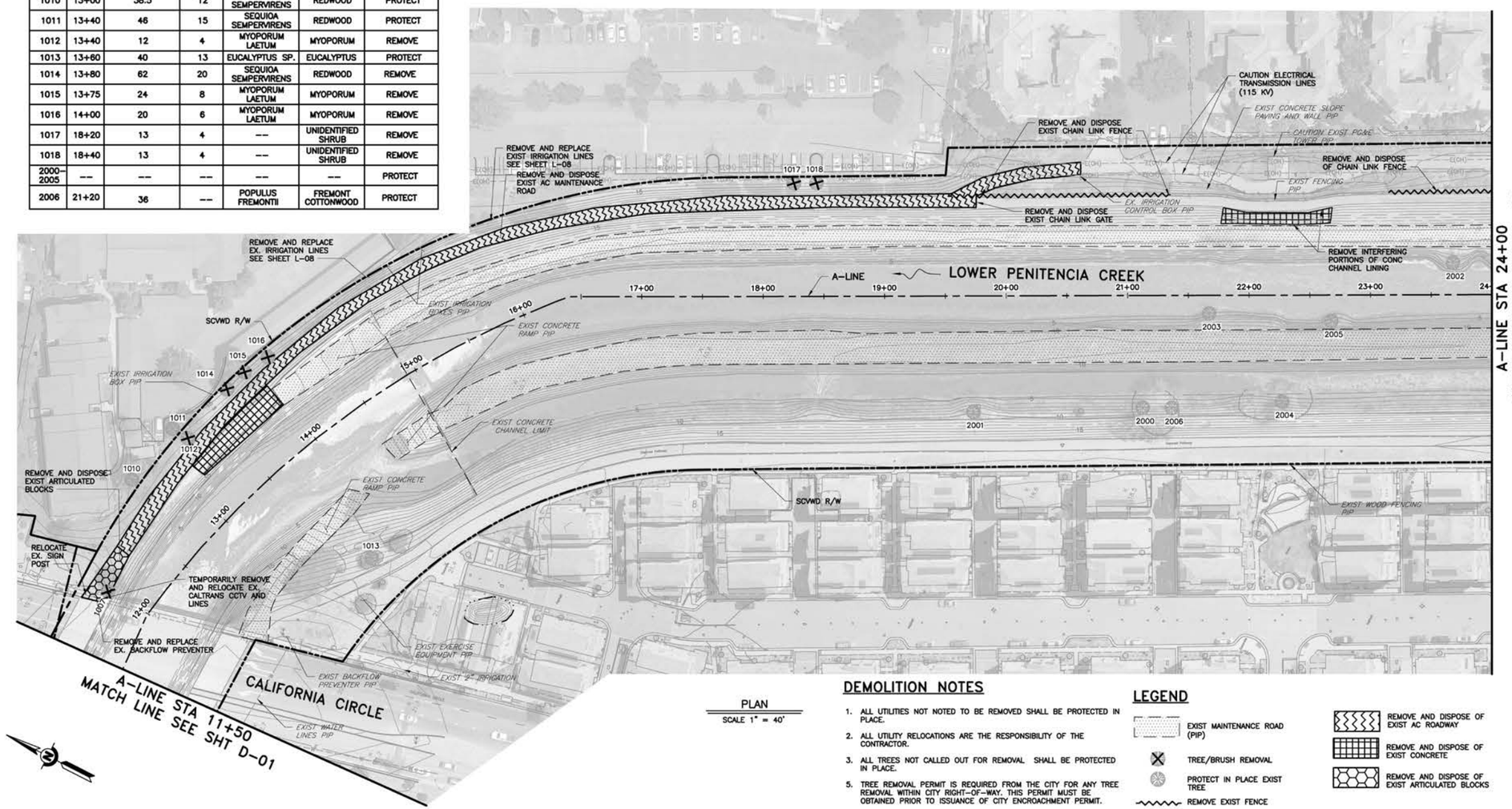

PLAN
SCALE 1" = 40'

DEMOLITION NOTES

1. ALL UTILITIES NOT NOTED TO BE REMOVED SHALL BE PROTECTED IN PLACE.
2. ALL UTILITY RELOCATIONS ARE THE RESPONSIBILITY OF THE CONTRACTOR.
3. ALL TREES NOT CALLED OUT FOR REMOVAL SHALL BE PROTECTED IN PLACE.
5. TREE REMOVAL PERMIT IS REQUIRED FROM THE CITY FOR ANY TREE REMOVAL WITHIN CITY RIGHT-OF-WAY. THIS PERMIT MUST BE OBTAINED PRIOR TO ISSUANCE OF CITY ENCROACHMENT PERMIT.
6. REFER TO CITY STD DWG 734 WHEN REPLACING BACKFLOW PREVENTERS.

LEGEND

- EXIST MAINTENANCE ROAD (PIP)
- TREE/BRUSH REMOVAL
- PROTECT IN PLACE EXIST TREE
- REMOVE EXIST FENCE
- REMOVE AND DISPOSE OF EXIST AC ROADWAY
- REMOVE AND DISPOSE OF EXIST CONCRETE
- REMOVE AND DISPOSE OF EXIST ARTICULATED BLOCKS

REV	DESCRIPTION	DATE	APPR.
	FINAL 11/20/2020		

REFERENCE INFORMATION AND NOTES
1. AERIAL PHOTOGRAPHY WAS TAKEN AUGUST 15, 2019

TETRA TECH
17885 VON KARMAN AVE., SUITE 500
IRVINE, CA 92614

DATE 5/23/2019
DESIGN AWG
DRAWN AWG
CHECKED YHC

ENGINEERING CERTIFICATION
REGISTERED PROFESSIONAL ENGINEER ERIC TORRESON NO. 66068 EXP. 6-30-20 CIVIL STATE OF CALIFORNIA
PROJECT ENGINEER DATE

SANTA CLARA VALLEY WATER DISTRICT
Valley Water
PROJECT ENGINEER ACCEPTED BY DISTRICT DATE

PROJECT NAME AND SHEET DESCRIPTION:
LOWER PENITENCIA CREEK IMPROVEMENTS PROJECT
DEMOLITION PLAN
A-LINE STA 11+50 TO STA 24+00

SCALE: AS SHOWN
VERIFY SCALES: 0 1" BAR IS ONE INCH ON ORIGINAL DRAWING IF NOT ONE INCH ON THIS SHEET, ADJUST SCALES ACCORDINGLY
PROJECT NUMBER: 40334005
SHEET CODE: D-02
SHEET NUMBER: 18 OF 90

DOCUMENT NUMBER: XXXX-X-0000-0000000.00
USERNAME: Andy.gong 11/20/2020 12:33 PM
FILENAME: P:\Wot\T35945 Lower Penitencia Creek\04 Design\Sheets\D-02.dwg

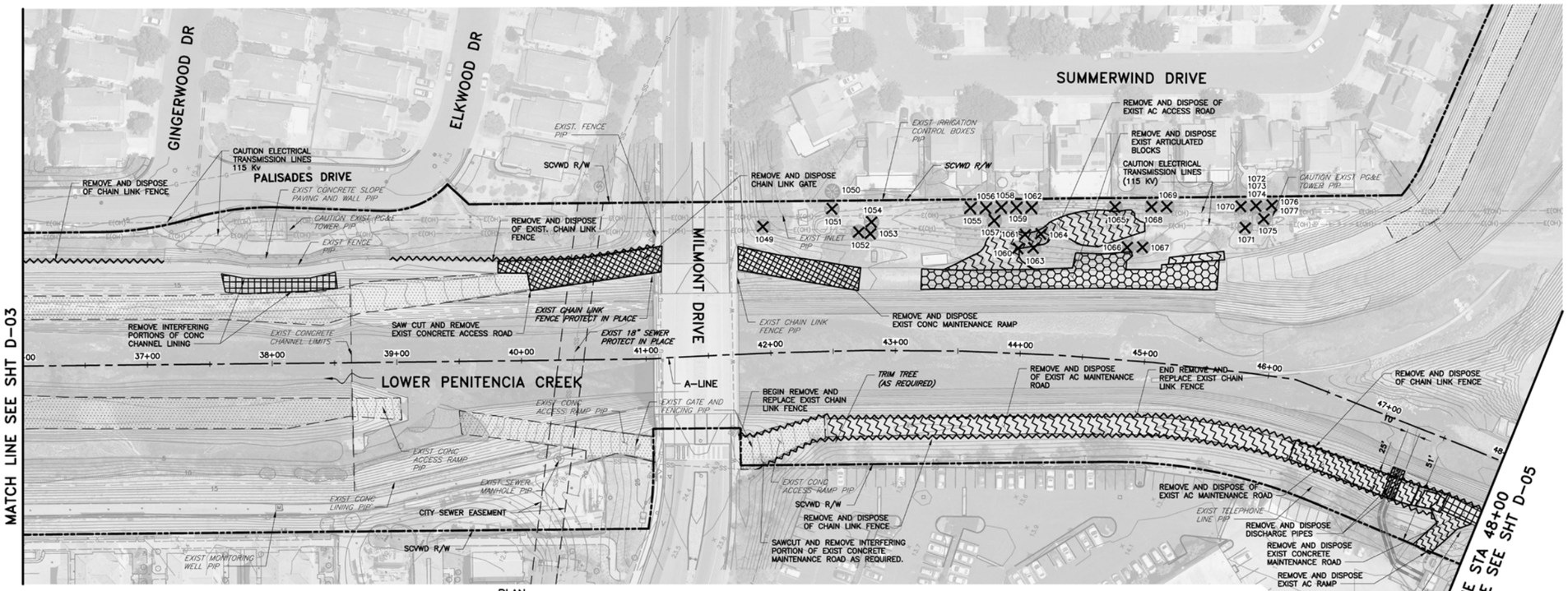

PLAN
SCALE 1" = 40'

TREE TABLE						
TREE #	STA	TRUNK CIRCUMFERENCE (INCHES)	DBH (INCHES)	SPECIES	COMMON NAME	NOTE
1049	41+85	24	8	MYOPORUM LAETUM	MYOPORUM	REMOVE
1050	42+30	50	16	SEQUOIA SEMPERVIRENS	COAST REDWOOD	PROTECT
1051	42+30	6	2	RHUS LANCEA	AFRICAN SUMAC	REMOVE
1052	42+50	15	5	MYOPORUM LAETUM	MYOPORUM	REMOVE
1053	42+60	19	6	MYOPORUM LAETUM	MYOPORUM	REMOVE
1054	42+62	14	4	CUPRESSUS SP.	CYPRESS	REMOVE
1055	43+45	21	7	MYOPORUM LAETUM	MYOPORUM	REMOVE
1056	43+55	21	7	MYOPORUM LAETUM	MYOPORUM	REMOVE
1057	43+65	15	5	MYOPORUM LAETUM	MYOPORUM	REMOVE
1058	43+70	15	5	MYOPORUM LAETUM	MYOPORUM	REMOVE
1059	43+87	15	5	MYOPORUM LAETUM	MYOPORUM	REMOVE
1060	43+90	16	5	JUNIPERUS SP.	JUNIPER	REMOVE – STUMP
1061	43+97	13	4	MYOPORUM LAETUM	MYOPORUM	REMOVE
1062	44+03	21	7	MYOPORUM LAETUM	MYOPORUM	REMOVE

TREE TABLE						
TREE #	STA	TRUNK CIRCUMFERENCE (INCHES)	DBH (INCHES)	SPECIES	COMMON NAME	NOTE
1063	44+05	13	4	MYOPORUM LAETUM	MYOPORUM	REMOVE
1064	44+07	13	4	MYOPORUM LAETUM	MYOPORUM	REMOVE
1065	44+60	16	5	MYOPORUM LAETUM	MYOPORUM	REMOVE
1066	44+80	5	2	--	UNIDENTIFIED SHRUB	REMOVE
1067	44+85	5	2	--	UNIDENTIFIED SHRUB	REMOVE
1068	44+90	20	6	MYOPORUM LAETUM	MYOPORUM	REMOVE
1069	45+00	10	3	PRUNUS SP.	PRUNUS SHRUB	REMOVE
1070	45+40	6	2	SALIX SP.	WILLOW	REMOVE
1071	45+46	20	6	JUNIPERUS SP.	JUNIPER	REMOVE
1072	45+50	29	9	WASHINGTONIA ROBUSTA	MEXICAN FAN PALM	REMOVE
1073	45+51	29	9	WASHINGTONIA ROBUSTA	MEXICAN FAN PALM	REMOVE
1074	45+53	29	9	WASHINGTONIA ROBUSTA	MEXICAN FAN PALM	REMOVE
1075	45+55	10	3	RHUS SP.	SUMAC	REMOVE
1076	45+65	10	3	--	UNIDENTIFIED SHRUB	REMOVE
1077	45+70	10	3	--	UNIDENTIFIED SHRUB	REMOVE

DEMOLITION NOTES

1. ALL UTILITIES NOT NOTED TO BE REMOVED SHALL BE PROTECTED IN PLACE.
2. ALL UTILITY RELOCATIONS ARE THE RESPONSIBILITY OF THE CONTRACTOR.
3. ALL TREES NOT CALLED OUT FOR REMOVAL SHALL BE PROTECTED IN PLACE.
5. TREE REMOVAL PERMIT IS REQUIRED FROM THE CITY FOR ANY TREE REMOVAL WITHIN CITY RIGHT-OF-WAY. THIS PERMIT MUST BE OBTAINED PRIOR TO ISSUANCE OF CITY ENCROACHMENT PERMIT.
6. REFER TO CITY STD DWG 734 WHEN REPLACING BACKFLOW PREVENTERS.

LEGEND

- EXIST MAINTENANCE ROAD (PIP)
- TREE/BRUSH REMOVAL
- REMOVE EXIST FENCE
- TREE/BUSH PROTECT IN PLACE
- REMOVE AND DISPOSE OF EXIST AC ROADWAY
- REMOVE AND DISPOSE OF EXIST CONCRETE
- REMOVE AND DISPOSE OF EXIST ARTICULATED BLOCKS
- REMOVE AND DISPOSE OF EXIST DISCHARGE PIPES

REV	DESCRIPTION	DATE	APPR.
	FINAL 11/20/2020		

REFERENCE INFORMATION AND NOTES
1. AERIAL PHOTOGRAPHY WAS TAKEN AUGUST 15, 2019

TETRA TECH
17885 VON KARMAN AVE., SUITE 500
IRVINE, CA 92614

DATE 5/23/2019
DESIGN AWG
DRAWN AWG
CHECKED YHC

ENGINEERING CERTIFICATION
REGISTERED PROFESSIONAL ENGINEER ERIC TORRESON NO. 66068 EXP. 6-30-20 CIVIL STATE OF CALIFORNIA
PROJECT ENGINEER DATE

SANTA CLARA VALLEY WATER DISTRICT
Valley Water
PROJECT ENGINEER ACCEPTED BY DISTRICT DATE

PROJECT NAME AND SHEET DESCRIPTION:
LOWER PENITENCIA CREEK IMPROVEMENTS PROJECT
DEMOLITION PLAN
A-LINE STA 36+00 TO STA 48+00

SCALE: AS SHOWN
VERIFY SCALES: 0 1" BAR IS ONE INCH ON ORIGINAL DRAWING IF NOT ONE INCH ON THIS SHEET, ADJUST SCALES ACCORDINGLY
PROJECT NUMBER: 40334005
SHEET CODE: D-04
SHEET NUMBER: 20 OF 90

DOCUMENT NUMBER: XXXX-X-0000-0000000.00
USERNAME: Andy.gong 11/20/2020 12:38 PM
FILENAME: P:\Wat\T35945 Lower Penitencia Creek\04 Design\Sheets\D-04.dwg

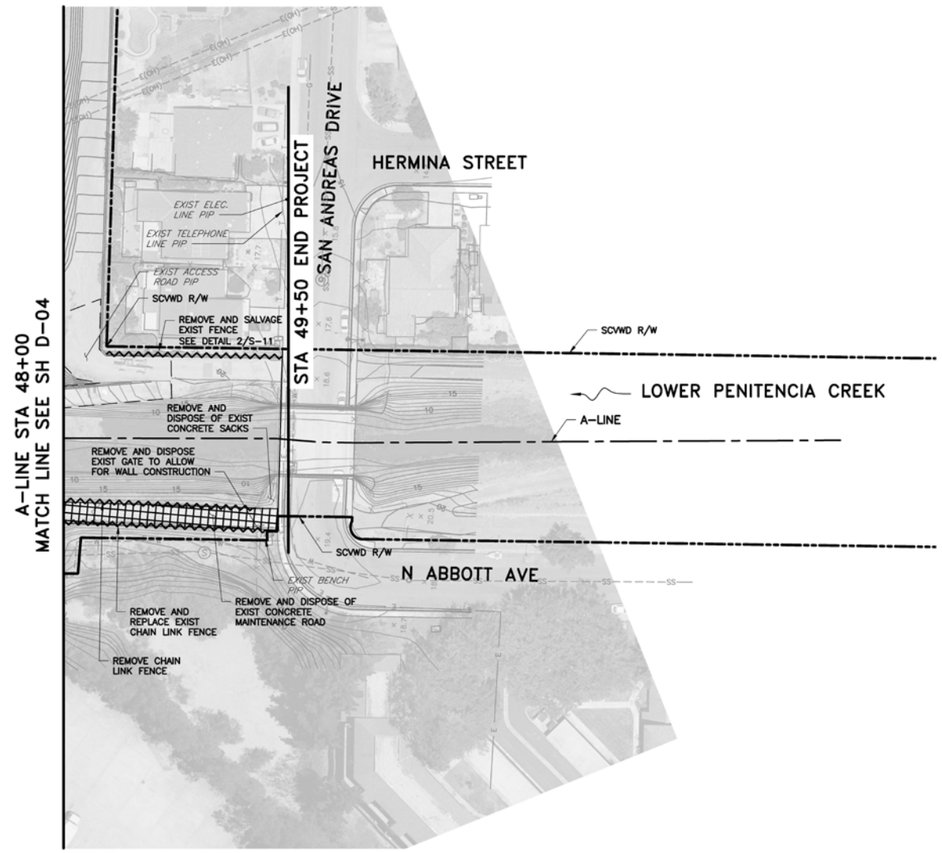

PLAN
SCALE 1" = 40'

DEMOLITION NOTES

1. ALL UTILITIES NOT NOTED TO BE REMOVED SHALL BE PROTECTED IN PLACE.
2. ALL UTILITY RELOCATIONS ARE THE RESPONSIBILITY OF THE CONTRACTOR.
3. ALL TREES NOT CALLED OUT FOR REMOVAL SHALL BE PROTECTED IN PLACE.
5. TREE REMOVAL PERMIT IS REQUIRED FROM THE CITY FOR ANY TREE REMOVAL WITHIN CITY RIGHT-OF-WAY. THIS PERMIT MUST BE OBTAINED PRIOR TO ISSUANCE OF CITY ENCROACHMENT PERMIT.
6. REFER TO CITY STD DWG 734 WHEN REPLACING BACKFLOW PREVENTERS.

LEGEND

- EXIST MAINTENANCE ROAD (PIP)
- TREE/BRUSH REMOVAL
- TREE/BUSH PROTECT IN PLACE
- REMOVE EXIST FENCE
- REMOVE AND DISPOSE OF EXIST AC ROADWAY
- REMOVE AND DISPOSE OF EXIST CONCRETE
- REMOVE AND DISPOSE OF EXIST ARTICULATED BLOCKS

REV	DESCRIPTION	DATE	APPR.
	FINAL 11/20/2020		

REFERENCE INFORMATION AND NOTES
1. AERIAL PHOTOGRAPHY WAS TAKEN AUGUST 15, 2019

TETRA TECH
17885 VON KARMAN AVE., SUITE 500
IRVINE, CA 92614

DATE 5/23/2019
DESIGN AWG
DRAWN AWG
CHECKED YHC

ENGINEERING CERTIFICATION
REGISTERED PROFESSIONAL ENGINEER ARIC TORRESON NO. 66068 EXP. 6-30-20 CIVIL STATE OF CALIFORNIA
PROJECT ENGINEER DATE

SANTA CLARA VALLEY WATER DISTRICT
Valley Water
PROJECT ENGINEER ACCEPTED BY DISTRICT DATE

PROJECT NAME AND SHEET DESCRIPTION:
LOWER PENITENCIA CREEK IMPROVEMENTS PROJECT
DEMOLITION PLAN
A-LINE STA 48+00 TO STA 49+50

SCALE: AS SHOWN
VERIFY SCALES: 0 1" BAR IS ONE INCH ON ORIGINAL DRAWING IF NOT ONE INCH ON THIS SHEET, ADJUST SCALES ACCORDINGLY
PROJECT NUMBER: 40334005
SHEET CODE: D-05
SHEET NUMBER: 21 OF 90

DOCUMENT NUMBER: XXXX-X-0000-0000000.00

USERNAME: Andy.gong 11/20/2020 12:28 PM
FILENAME: P:\Wat\T35945 Lower Penitencia Creek\04 Design\Sheets\D-05.dwg

EXHIBIT C
LCC and LPC City Approved Drawings for Improvement Removal and Replacement (continued)

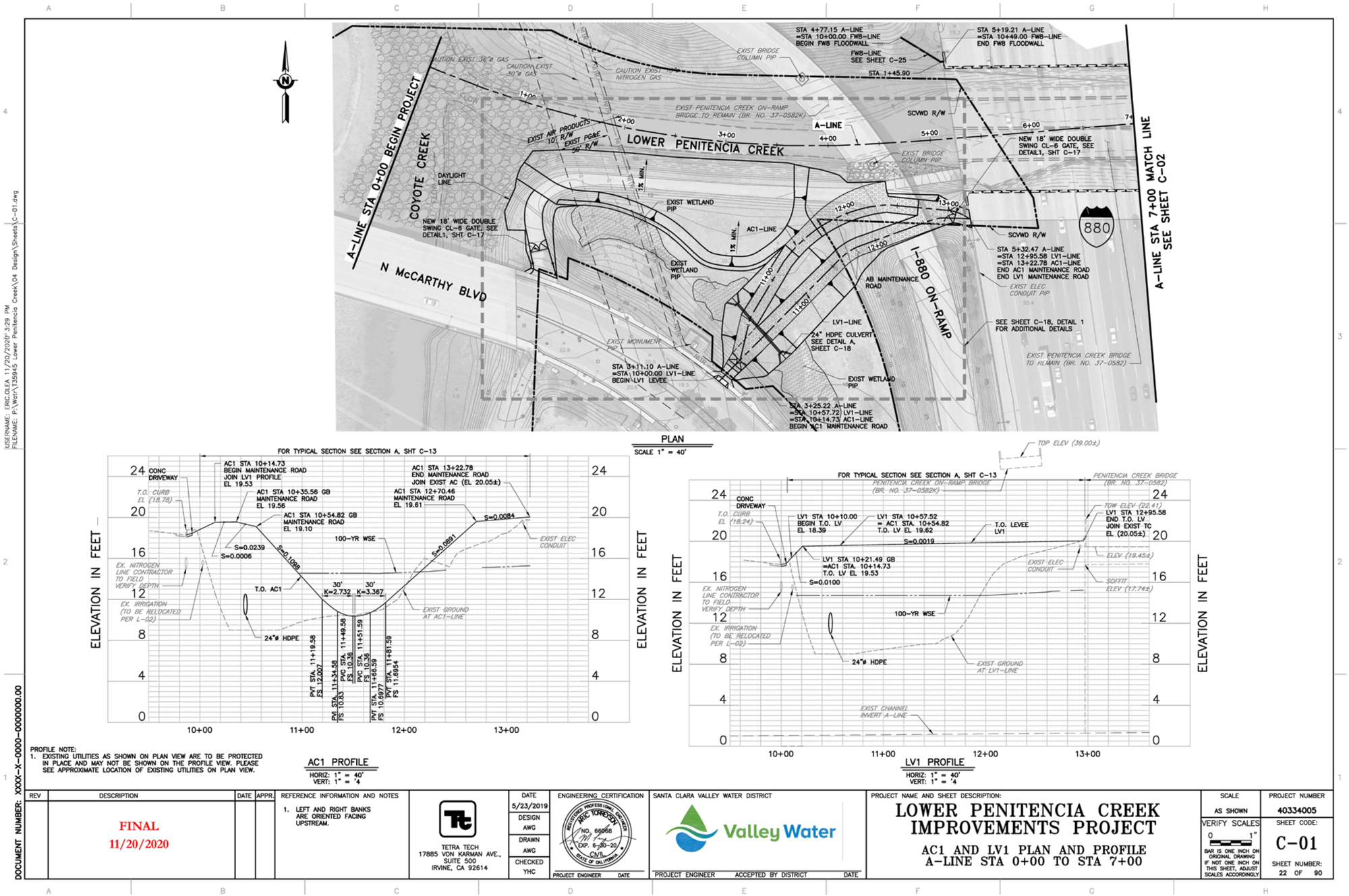

EXHIBIT C
LCC and LPC City Approved Drawings for Improvement Removal and Replacement (continued)

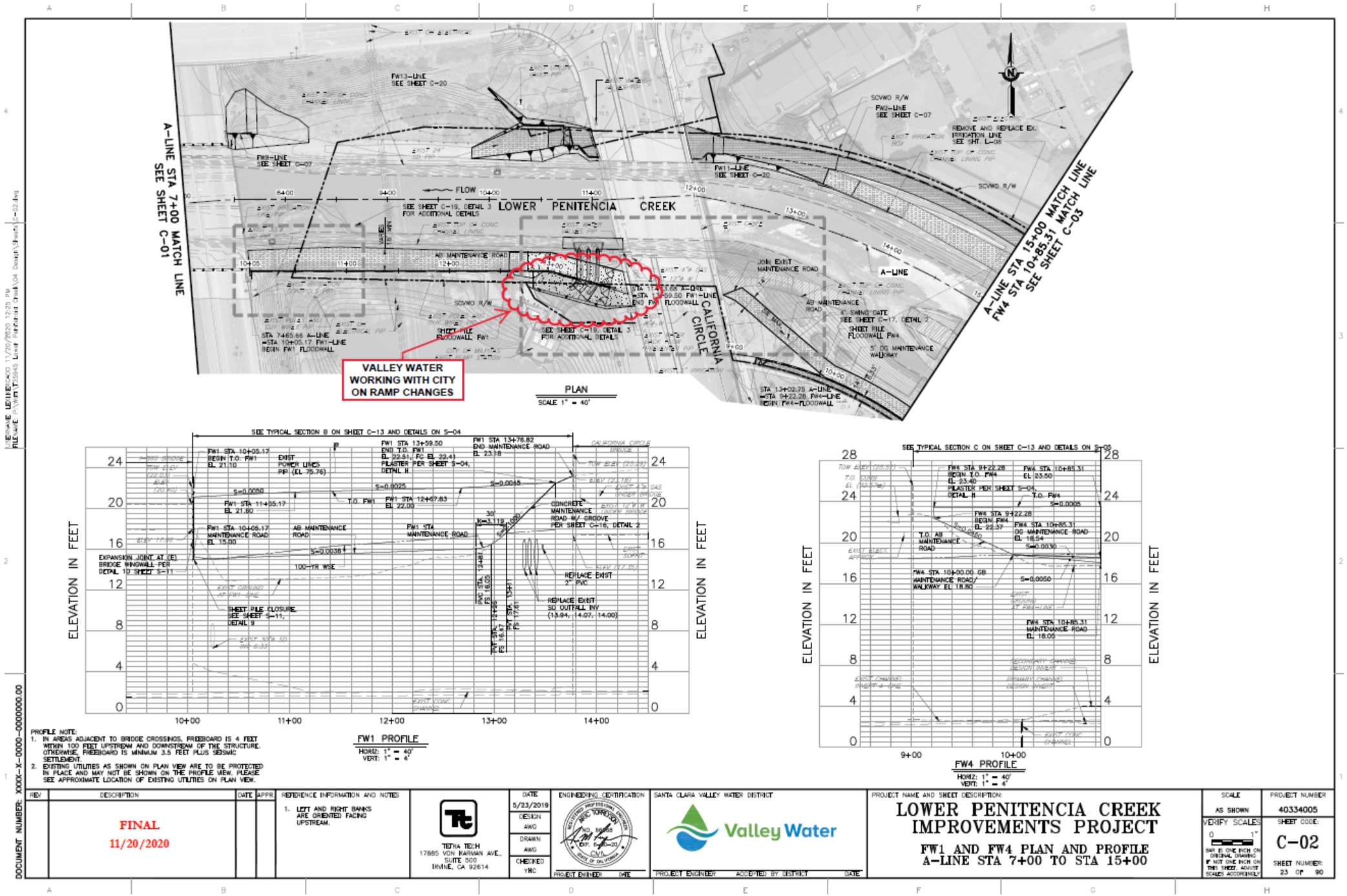

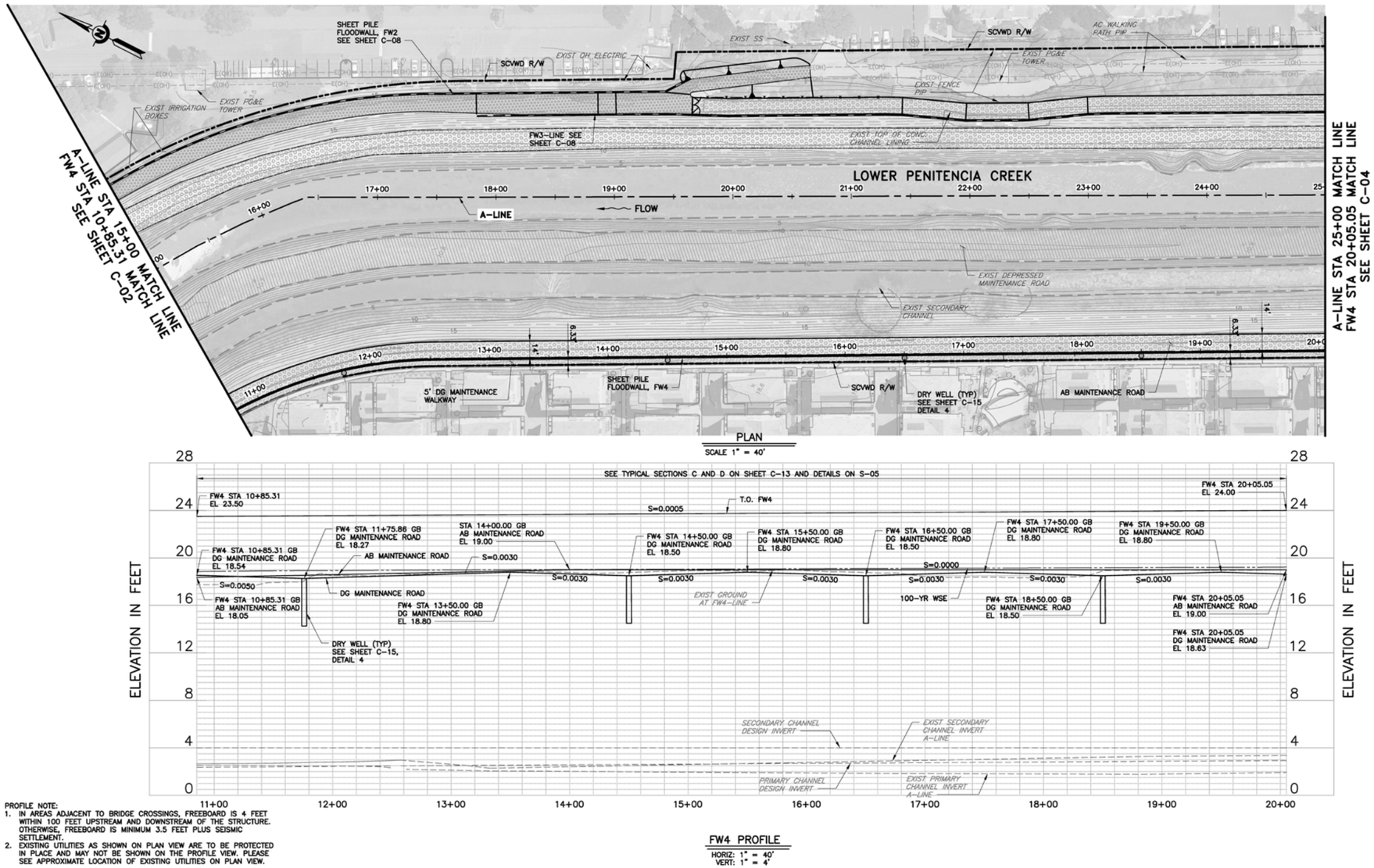

PROFILE NOTE:
1. IN AREAS ADJACENT TO BRIDGE CROSSINGS, FREEBOARD IS 4 FEET WITHIN 100 FEET UPSTREAM AND DOWNSTREAM OF THE STRUCTURE. OTHERWISE, FREEBOARD IS MINIMUM 3.5 FEET PLUS SEISMIC SETTLEMENT.
2. EXISTING UTILITIES AS SHOWN ON PLAN VIEW ARE TO BE PROTECTED IN PLACE AND MAY NOT BE SHOWN ON THE PROFILE VIEW. PLEASE SEE APPROXIMATE LOCATION OF EXISTING UTILITIES ON PLAN VIEW.

REV	DESCRIPTION	DATE	APPR.
	FINAL 11/20/2020		

REFERENCE INFORMATION AND NOTES
1. RIGHT OF WAY AND CONTROL LINE ARE GIS BASED AND ARE FOR PLANNING LEVEL ONLY.
2. LEFT AND RIGHT BANKS ARE ORIENTED FACING UPSTREAM.

TETRA TECH
17885 VON KARMAN AVE., SUITE 500
IRVINE, CA 92614

DATE 5/23/2019
DESIGN AWG
DRAWN AWG
CHECKED YHC

ENGINEERING CERTIFICATION
REGISTERED PROFESSIONAL ENGINEER ARIC TORRESON NO. 66968 EXP. 6-30-20 CIVIL STATE OF CALIFORNIA
PROJECT ENGINEER DATE

SANTA CLARA VALLEY WATER DISTRICT
Valley Water
PROJECT ENGINEER ACCEPTED BY DISTRICT DATE

PROJECT NAME AND SHEET DESCRIPTION:
LOWER PENITENCIA CREEK IMPROVEMENTS PROJECT
FW4 PLAN AND PROFILE
A-LINE STA 15+00 TO STA 25+00

SCALE: AS SHOWN
VERIFY SCALES: 0 — 1" BAR IS ONE INCH ON ORIGINAL DRAWING IF NOT ONE INCH ON THIS SHEET, ADJUST SCALES ACCORDINGLY
PROJECT NUMBER: 40334005
SHEET CODE: C-03
SHEET NUMBER: 24 OF 90

DOCUMENT NUMBER: XXXX-X-0000-0000000.00
USERNAME: Jake.corner 11/20/2020 12:30 PM
FILENAME: P:\Wat\T35945 Lower Penitencia Creek\04 Design\Sheets\C-03.dwg

EXHIBIT C
LCC and LPC City Approved Drawings for Improvement Removal and Replacement (continued)

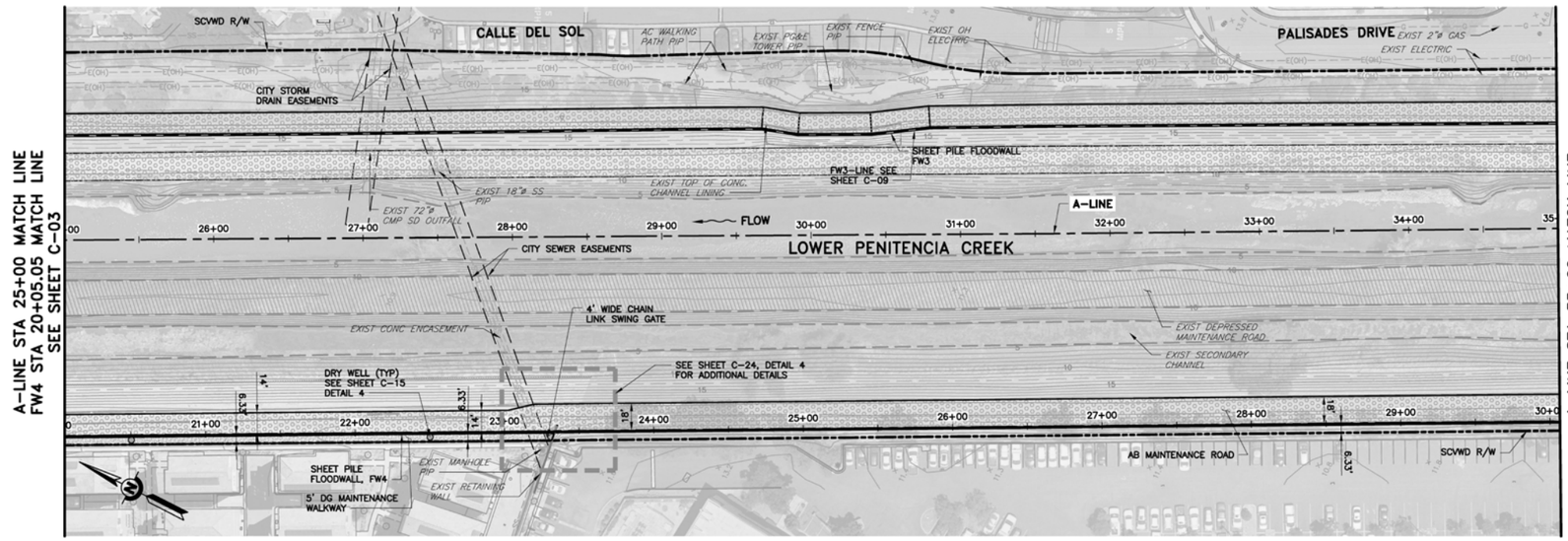

PLAN
SCALE 1" = 40'

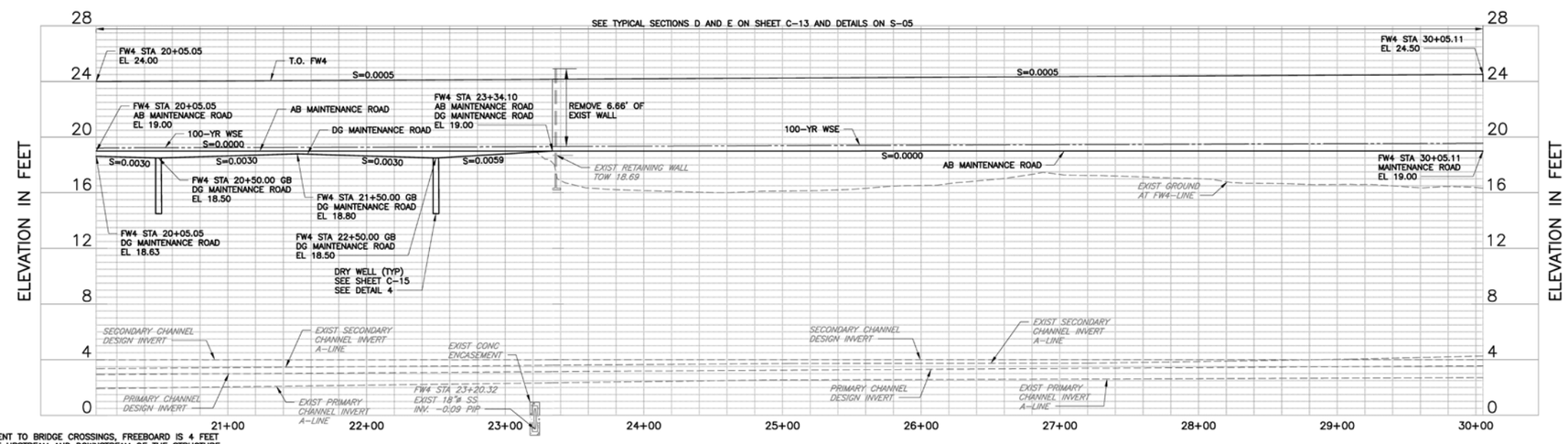

FW4 PROFILE
HORIZ: 1" = 40'
VERT: 1" = 4'

PROFILE NOTE:
1. IN AREAS ADJACENT TO BRIDGE CROSSINGS, FREEBOARD IS 4 FEET WITHIN 100 FEET UPSTREAM AND DOWNSTREAM OF THE STRUCTURE. OTHERWISE, FREEBOARD IS MINIMUM 3.5 FEET PLUS SEISMIC SETTLEMENT.
2. EXISTING UTILITIES AS SHOWN ON PLAN VIEW ARE TO BE PROTECTED IN PLACE AND MAY NOT BE SHOWN ON THE PROFILE VIEW. PLEASE SEE APPROXIMATE LOCATION OF EXISTING UTILITIES ON PLAN VIEW.

REV	DESCRIPTION	DATE	APPR.
	FINAL 11/20/2020		

REFERENCE INFORMATION AND NOTES
1. LEFT AND RIGHT BANKS ARE ORIENTED FACING UPSTREAM.

TETRA TECH
17885 VON KARMAN AVE., SUITE 500
IRVINE, CA 92614

DATE 5/23/2019
DESIGN AWG
DRAWN AWG
CHECKED YHC

ENGINEERING CERTIFICATION
REGISTERED PROFESSIONAL ENGINEER ARIC TORRESDEY NO. 66068 EXP. 6-30-20 CIVIL STATE OF CALIFORNIA
PROJECT ENGINEER DATE

SANTA CLARA VALLEY WATER DISTRICT
Valley Water
PROJECT ENGINEER ACCEPTED BY DISTRICT DATE

PROJECT NAME AND SHEET DESCRIPTION:
LOWER PENITENCIA CREEK IMPROVEMENTS PROJECT
FW4 PLAN AND PROFILE
A-LINE STA 25+00 TO STA 35+00

SCALE: AS SHOWN
VERIFY SCALES: 0 1" BAR IS ONE INCH ON ORIGINAL DRAWING IF NOT ONE INCH ON THIS SHEET, ADJUST SCALES ACCORDINGLY
PROJECT NUMBER: 40334005
SHEET CODE: C-04
SHEET NUMBER: 25 OF 90

DOCUMENT NUMBER: XXXX-X-0000-0000000.00
USERNAME: Andy.gong 11/20/2020 12:34 PM
FILENAME: P:\Wat\T35945 Lower Penitencia Creek\04 Design\Sheets\C-04.dwg

EXHIBIT C
LCC and LPC City Approved Drawings for Improvement Removal and Replacement (continued)

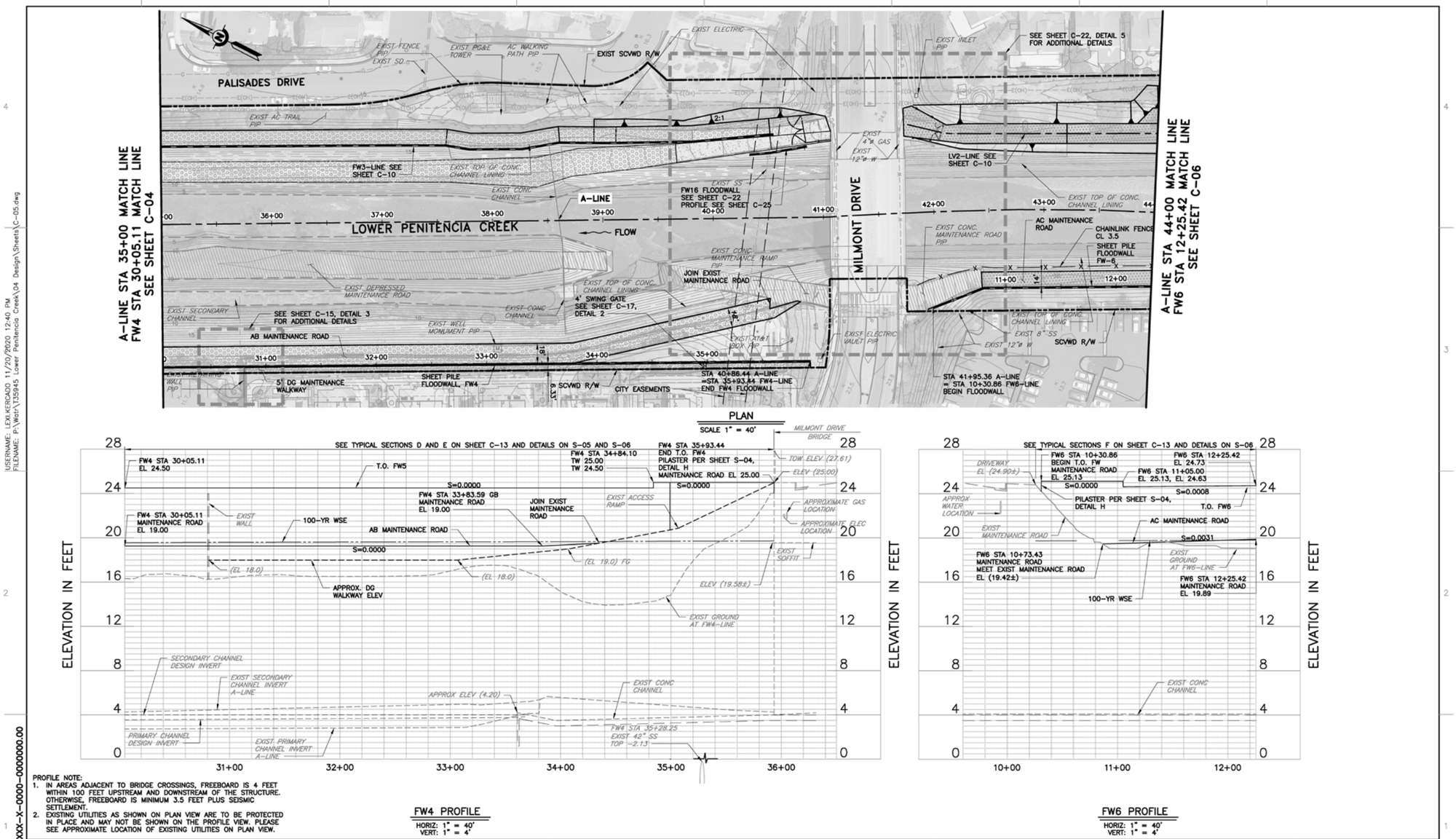

PROFILE NOTE:
1. IN AREAS ADJACENT TO BRIDGE CROSSINGS, FREEBOARD IS 4 FEET WITHIN 100 FEET UPSTREAM AND DOWNSTREAM OF THE STRUCTURE. OTHERWISE, FREEBOARD IS MINIMUM 3.5 FEET PLUS SEISMIC SETTLEMENT.
2. EXISTING UTILITIES AS SHOWN ON PLAN VIEW ARE TO BE PROTECTED IN PLACE AND MAY NOT BE SHOWN ON THE PROFILE VIEW. PLEASE SEE APPROXIMATE LOCATION OF EXISTING UTILITIES ON PLAN VIEW.

REV	DESCRIPTION	DATE	APPR.
	FINAL 11/20/2020		

REFERENCE INFORMATION AND NOTES
1. LEFT AND RIGHT BANKS ARE ORIENTED FACING UPSTREAM.

TETRA TECH
17885 VON KARMAN AVE., SUITE 500
IRVINE, CA 92614

DATE 5/23/2019
DESIGN AWG
DRAWN AWG
CHECKED YHC

ENGINEERING CERTIFICATION
REGISTERED PROFESSIONAL ENGINEER ARIE TORRESDEY NO. 66068 EXP. 6-30-20 CIVIL STATE OF CALIFORNIA
PROJECT ENGINEER DATE

SANTA CLARA VALLEY WATER DISTRICT
Valley Water
PROJECT ENGINEER ACCEPTED BY DISTRICT DATE

PROJECT NAME AND SHEET DESCRIPTION:
LOWER PENITENCIA CREEK IMPROVEMENTS PROJECT
FW4 AND FW6 PLAN AND PROFILE
A-LINE STA 35+00 TO STA 44+00

SCALE: AS SHOWN
VERIFY SCALES: 0 1" BAR IS ONE INCH ON ORIGINAL DRAWING IF NOT ONE INCH ON THIS SHEET, ADJUST SCALES ACCORDINGLY
PROJECT NUMBER: 40334005
SHEET CODE: C-05
SHEET NUMBER: 26 OF 90

USERNAME: LEXI.KERCADO 11/20/2020 12:40 PM
FILENAME: P:\Wat\T35945 Lower Penitencia Creek\04 Design\Sheets\C-05.dwg
DOCUMENT NUMBER: XXXX-X-0000-0000000.00

EXHIBIT C
LCC and LPC City Approved Drawings for Improvement Removal and Replacement (continued)

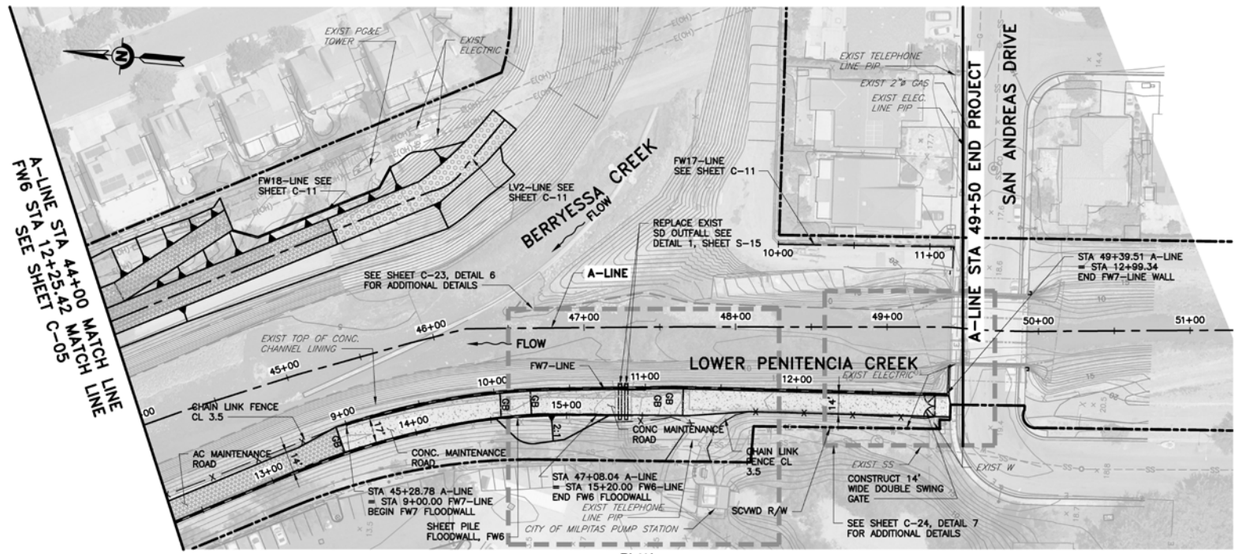

PLAN
SCALE 1" = 40'

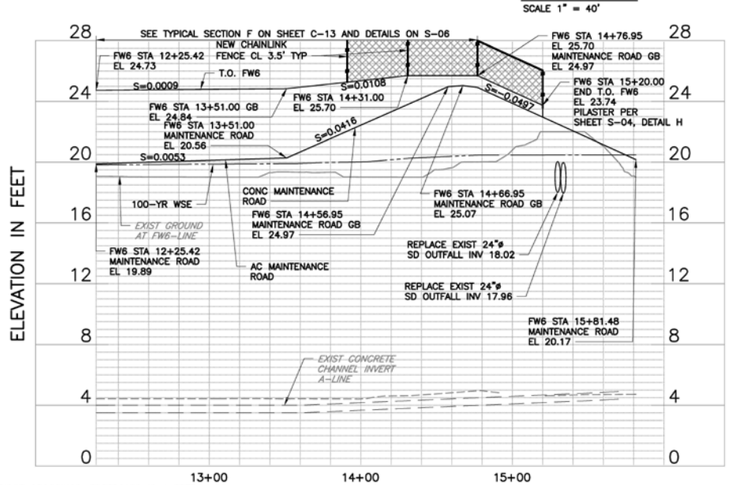

FW6 PROFILE
HORIZ: 1" = 40'
VERT: 1" = 4'

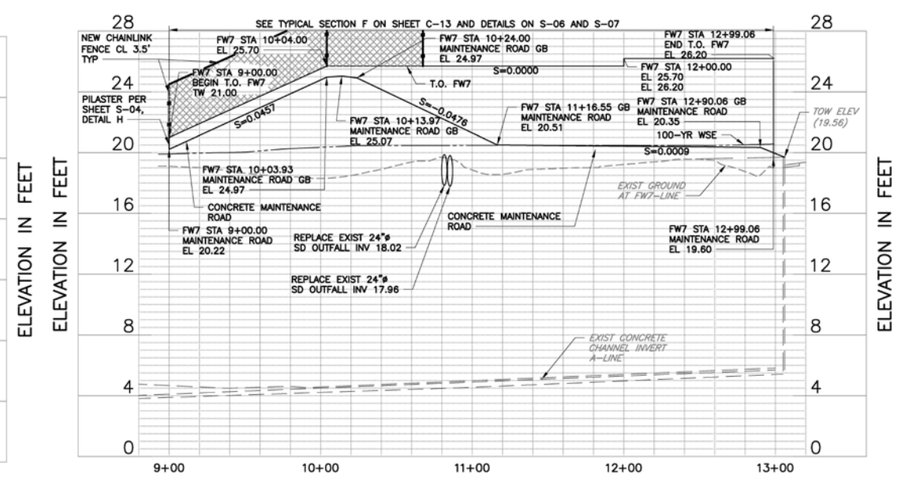

FW7 PROFILE
HORIZ: 1" = 40'
VERT: 1" = 4'

PROFILE NOTE:
1. IN AREAS ADJACENT TO BRIDGE CROSSINGS, FREEBOARD IS 4 FEET WITHIN 100 FEET UPSTREAM AND DOWNSTREAM OF THE STRUCTURE. OTHERWISE, FREEBOARD IS MINIMUM 3.5 FEET PLUS SEISMIC SETTLEMENT.
2. EXISTING UTILITIES AS SHOWN ON PLAN VIEW ARE TO BE PROTECTED IN PLACE AND MAY NOT BE SHOWN ON THE PROFILE VIEW. PLEASE SEE APPROXIMATE LOCATION OF EXISTING UTILITIES ON PLAN VIEW.

REV	DESCRIPTION	DATE	APPR.
	FINAL 11/20/2020		

REFERENCE INFORMATION AND NOTES
1. LEFT AND RIGHT BANKS ARE ORIENTED FACING UPSTREAM.

TETRA TECH
17885 VON KARMAN AVE., SUITE 500
IRVINE, CA 92614

DATE 5/23/2019
DESIGN AWG
DRAWN AWG
CHECKED YHC

ENGINEERING CERTIFICATION
REGISTERED PROFESSIONAL ENGINEER ARIC TORRESON NO. 66068 EXP. 6-30-20 CIVIL STATE OF CALIFORNIA
PROJECT ENGINEER DATE

SANTA CLARA VALLEY WATER DISTRICT
Valley Water
PROJECT ENGINEER ACCEPTED BY DISTRICT DATE

PROJECT NAME AND SHEET DESCRIPTION:
LOWER PENITENCIA CREEK IMPROVEMENTS PROJECT
FW6, FW7, AND FW15 PLAN AND PROFILE
A-LINE STA 44+00 TO STA 49+50

SCALE: AS SHOWN
VERIFY SCALES: 0 1" BAR IS ONE INCH ON ORIGINAL DRAWING IF NOT ONE INCH ON THIS SHEET, ADJUST SCALES ACCORDINGLY
PROJECT NUMBER: 40334005
SHEET CODE: C-06
SHEET NUMBER: 27 OF 90

DOCUMENT NUMBER: XXXX-X-0000-0000000.00
USERNAME: Andy.gong 11/20/2020 12:44 PM
FILENAME: P:\Wat\135945 Lower Penitencia Creek\04 Design\Sheets\C-06.dwg

EXHIBIT C
LCC and LPC City Approved Drawings for Improvement Removal and Replacement (continued)

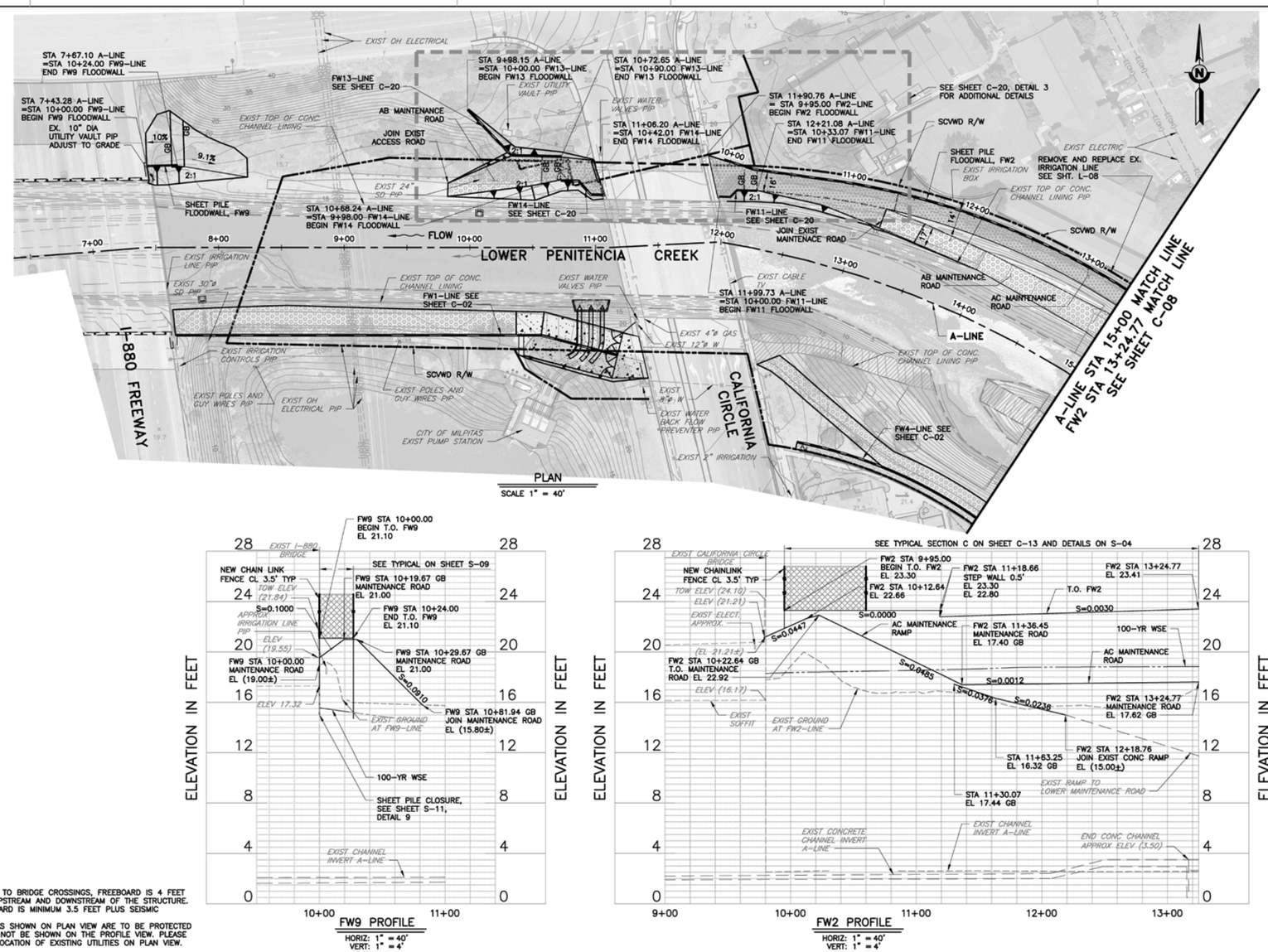

PROFILE NOTE:
1. IN AREAS ADJACENT TO BRIDGE CROSSINGS, FREEBOARD IS 4 FEET WITHIN 100 FEET UPSTREAM AND DOWNSTREAM OF THE STRUCTURE. OTHERWISE, FREEBOARD IS MINIMUM 3.5 FEET PLUS SEISMIC SETTLEMENT.
2. EXISTING UTILITIES AS SHOWN ON PLAN VIEW ARE TO BE PROTECTED IN PLACE AND MAY NOT BE SHOWN ON THE PROFILE VIEW. PLEASE SEE APPROXIMATE LOCATION OF EXISTING UTILITIES ON PLAN VIEW.

REV	DESCRIPTION	DATE	APPR.
	FINAL 11/20/2020		

REFERENCE INFORMATION AND NOTES
1. LEFT AND RIGHT BANKS ARE ORIENTED FACING UPSTREAM.

TETRA TECH
17885 VON KARMAN AVE., SUITE 500
IRVINE, CA 92614

DATE 5/23/2019
DESIGN AWG
DRAWN AWG
CHECKED YHC

ENGINEERING CERTIFICATION
REGISTERED PROFESSIONAL ENGINEER ARIC TORRESON NO. 66068 EXP. 6-30-20 CIVIL STATE OF CALIFORNIA
PROJECT ENGINEER DATE

SANTA CLARA VALLEY WATER DISTRICT
Valley Water
PROJECT ENGINEER ACCEPTED BY DISTRICT DATE

PROJECT NAME AND SHEET DESCRIPTION:
LOWER PENITENCIA CREEK IMPROVEMENTS PROJECT
FW2 AND FW9 PLAN AND PROFILE
A-LINE STA 7+00 TO STA 15+00

SCALE: AS SHOWN
VERIFY SCALES: 0 1" BAR IS ONE INCH ON ORIGINAL DRAWING IF NOT ONE INCH ON THIS SHEET, ADJUST SCALES ACCORDINGLY
PROJECT NUMBER: 40334005
SHEET CODE: C-07
SHEET NUMBER: 28 OF 90

USERNAME: Andy.gong 11/20/2020 12:49 PM
FILENAME: P:\Wat\T35945 Lower Penitencia Creek\04 Design\Sheets\C-07.dwg
DOCUMENT NUMBER: XXXX-X-0000-0000000.00

EXHIBIT C
LCC and LPC City Approved Drawings for Improvement Removal and Replacement (continued)

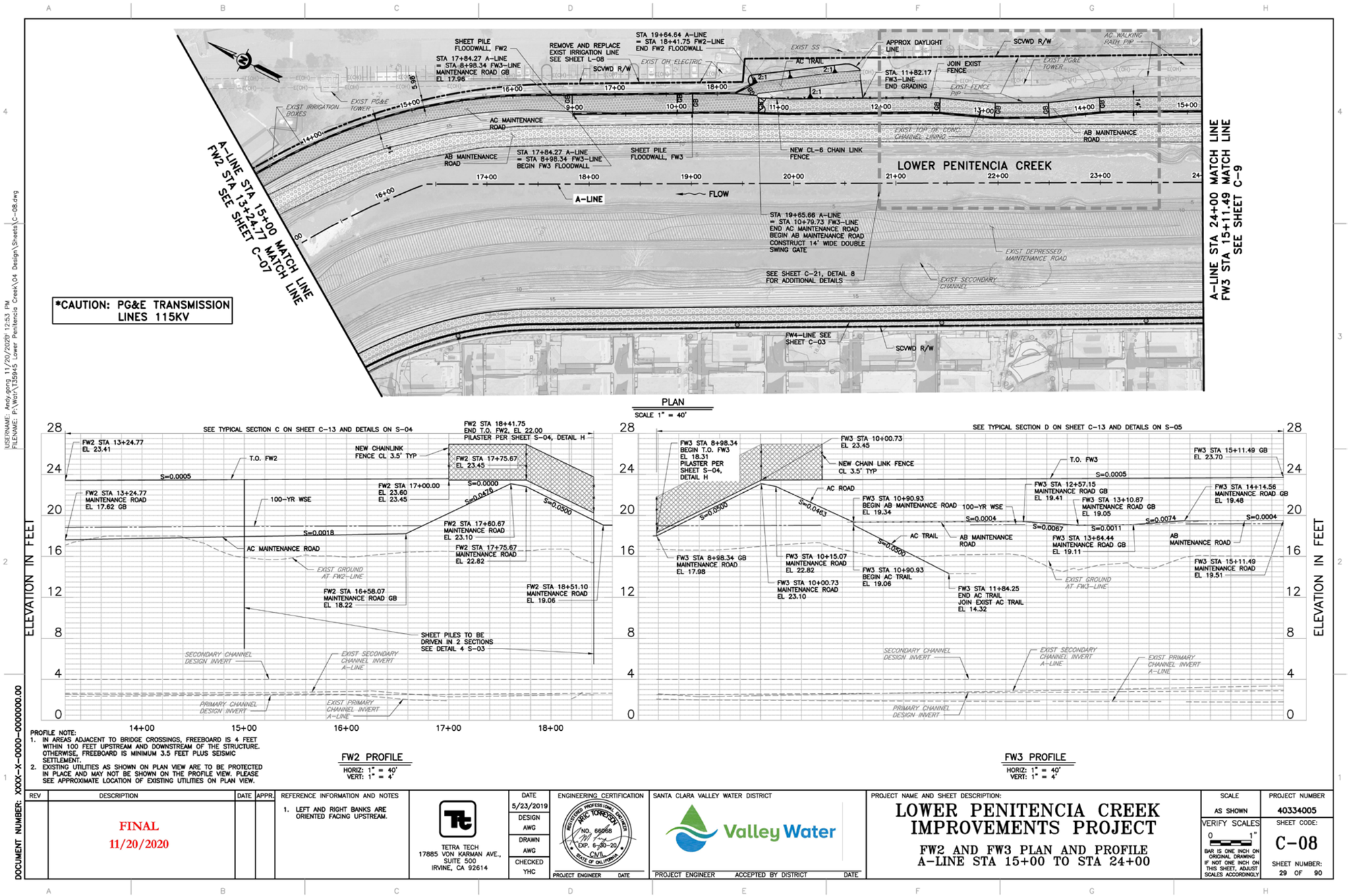

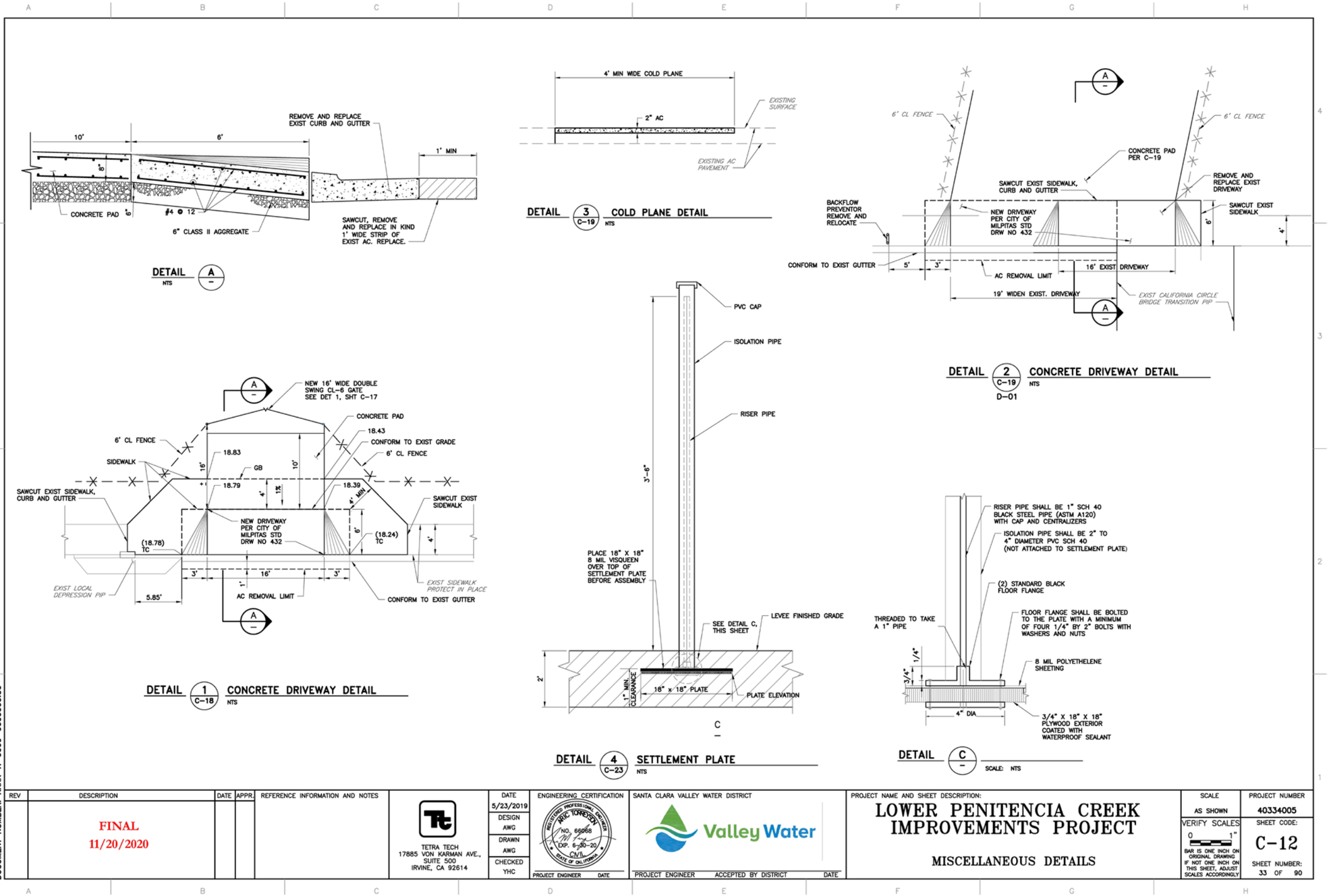
REMOVE AND REPLACE EXIST CURB AND GUTTER
10'
6'
1' MIN
CONCRETE PAD
#4 @ 12
6" CLASS II AGGREGATE
SAWCUT, REMOVE AND REPLACE IN KIND 1' WIDE STRIP OF EXIST AC. REPLACE.
DETAIL A
NTS
4' MIN WIDE COLD PLANE
2" AC
EXISTING SURFACE
EXISTING AC PAVEMENT
DETAIL 3 C-19 COLD PLANE DETAIL
NTS
6' CL FENCE
CONCRETE PAD PER C-19
SAWCUT EXIST SIDEWALK, CURB AND GUTTER
REMOVE AND REPLACE EXIST DRIVEWAY
SAWCUT EXIST SIDEWALK
BACKFLOW PREVENTOR REMOVE AND RELOCATE
NEW DRIVEWAY PER CITY OF MILPITAS STD DRW NO 432
CONFORM TO EXIST GUTTER
5'
3'
AC REMOVAL LIMIT
16' EXIST DRIVEWAY
19' WIDEN EXIST. DRIVEWAY
EXIST CALIFORNIA CIRCLE BRIDGE TRANSITION PIP
DETAIL 2 C-19 D-01 CONCRETE DRIVEWAY DETAIL
NTS
NEW 16' WIDE DOUBLE SWING CL-6 GATE SEE DET 1, SHT C-17
CONCRETE PAD
18.43
CONFORM TO EXIST GRADE
6' CL FENCE
SIDEWALK
18.83
GB
18.79
18.39
SAWCUT EXIST SIDEWALK, CURB AND GUTTER
SAWCUT EXIST SIDEWALK
NEW DRIVEWAY PER CITY OF MILPITAS STD DRW NO 432
(18.78) TC
(18.24) TC
EXIST LOCAL DEPRESSION PIP
5.85'
AC REMOVAL LIMIT
EXIST SIDEWALK PROTECT IN PLACE
CONFORM TO EXIST GUTTER
DETAIL 1 C-18 CONCRETE DRIVEWAY DETAIL
NTS
PVC CAP
ISOLATION PIPE
RISER PIPE
3'-6"
PLACE 18" X 18" 8 MIL VISQUEEN OVER TOP OF SETTLEMENT PLATE BEFORE ASSEMBLY
SEE DETAIL C, THIS SHEET
LEVEE FINISHED GRADE
2'
1" MIN. CLEARANCE
18" x 18" PLATE
PLATE ELEVATION
DETAIL 4 C-23 SETTLEMENT PLATE
NTS
RISER PIPE SHALL BE 1" SCH 40 BLACK STEEL PIPE (ASTM A120) WITH CAP AND CENTRALIZERS
ISOLATION PIPE SHALL BE 2" TO 4" DIAMETER PVC SCH 40 (NOT ATTACHED TO SETTLEMENT PLATE)
(2) STANDARD BLACK FLOOR FLANGE
THREADED TO TAKE A 1" PIPE
FLOOR FLANGE SHALL BE BOLTED TO THE PLATE WITH A MINIMUM OF FOUR 1/4" BY 2" BOLTS WITH WASHERS AND NUTS
8 MIL POLYETHELENE SHEETING
1/4"
3/4"
4" DIA
3/4" X 18" X 18" PLYWOOD EXTERIOR COATED WITH WATERPROOF SEALANT
DETAIL C
SCALE: NTS
USERNAME: Andy.gong 11/20/2020 12:48 PM
FILENAME: P:\Wor\135945 Lower Penitencia Creek\04 Design\Sheets\C-12.dwg
DOCUMENT NUMBER: XXXX-X-0000-0000000.00
REV
DESCRIPTION
DATE
APPR.
REFERENCE INFORMATION AND NOTES
FINAL
11/20/2020
TETRA TECH
17885 VON KARMAN AVE., SUITE 500
IRVINE, CA 92614
DATE 5/23/2019
DESIGN AWG
DRAWN AWG
CHECKED YHC
ENGINEERING CERTIFICATION
REGISTERED PROFESSIONAL ENGINEER
ERIC TORRESON
NO. 66968
EXP. 6-30-20
CIVIL
STATE OF CALIFORNIA
PROJECT ENGINEER
DATE
SANTA CLARA VALLEY WATER DISTRICT
Valley Water
PROJECT ENGINEER
ACCEPTED BY DISTRICT
DATE
PROJECT NAME AND SHEET DESCRIPTION:
LOWER PENITENCIA CREEK IMPROVEMENTS PROJECT
MISCELLANEOUS DETAILS
SCALE
AS SHOWN
VERIFY SCALES
0
1"
BAR IS ONE INCH ON ORIGINAL DRAWING IF NOT ONE INCH ON THIS SHEET, ADJUST SCALES ACCORDINGLY
PROJECT NUMBER
40334005
SHEET CODE:
C-12
SHEET NUMBER:
33 OF 90

EXHIBIT C
LCC and LPC City Approved Drawings for Improvement Removal and Replacement (continued)

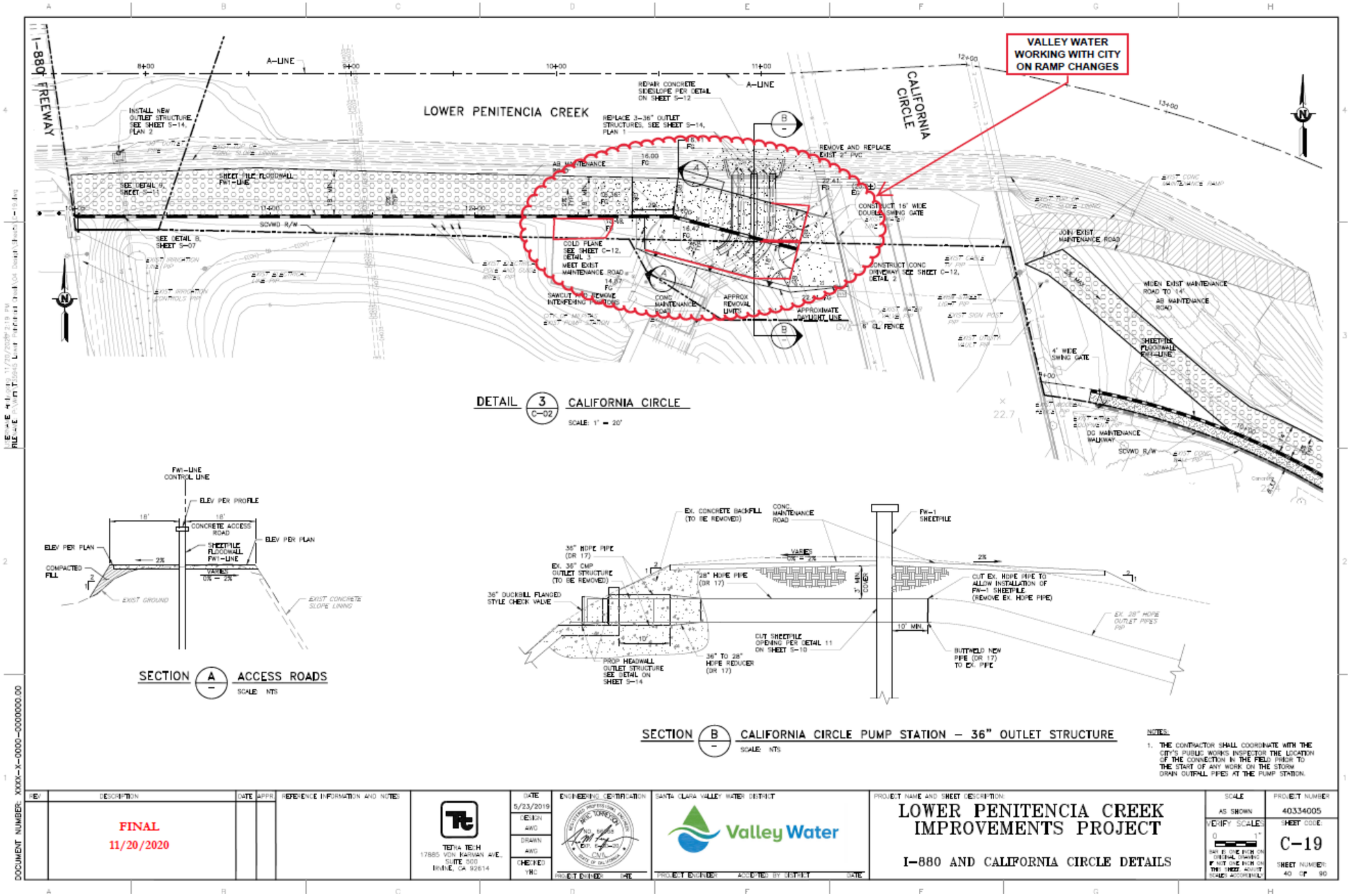

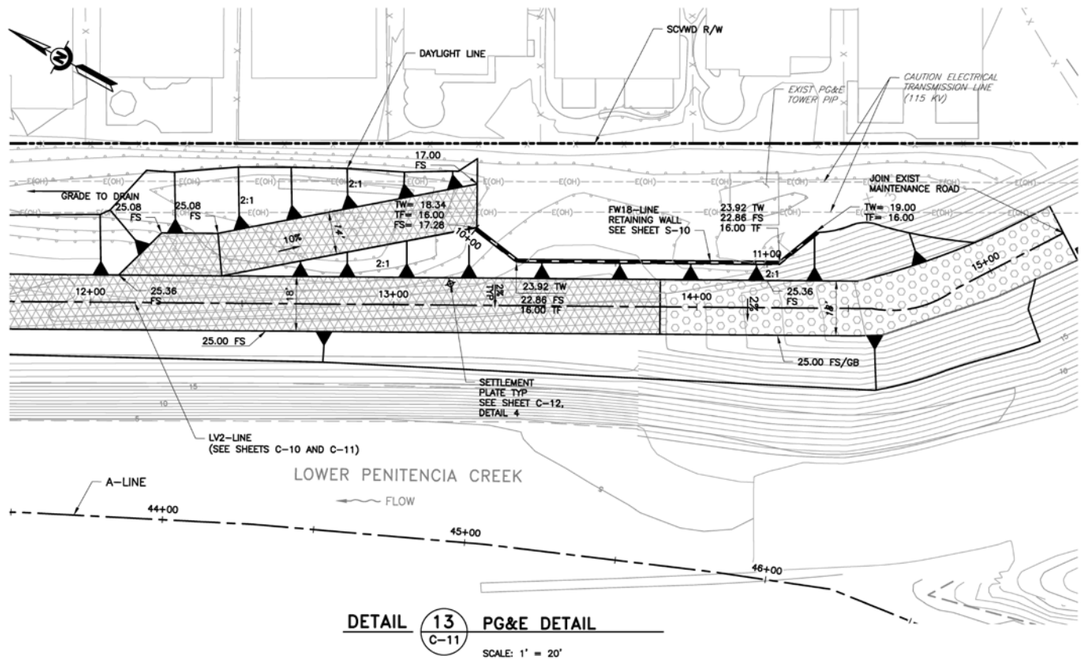

DETAIL 13 / C-11 PG&E DETAIL
SCALE: 1' = 20'

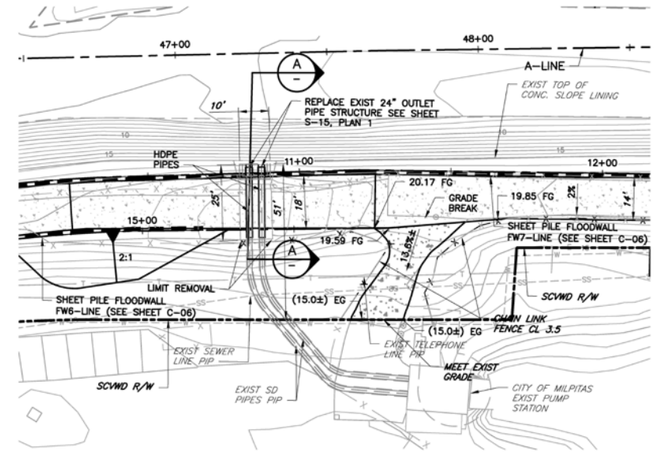

DETAIL 6 / C-06 ABBOT AVE PUMP STATION AT STATION 48+00
SCALE: 1' = 20'

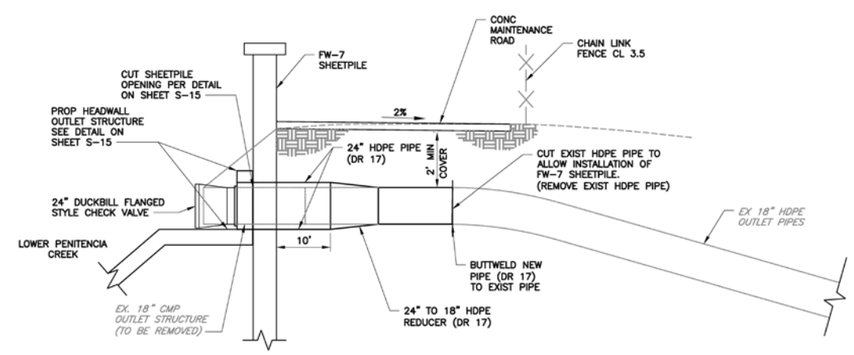

SECTION A ABBOT AVE PUMP STATION
SCALE: NTS

NOTES:

1. THE CONTRACTOR SHALL COORDINATE WITH THE CITY'S PUBLIC WORKS INSPECTOR THE LOCATION OF THE CONNECTION IN THE FIELD PRIOR TO THE START OF ANY WORK ON THE STORM DRAIN OUTFALL PIPES AT THE PUMP STATION.

USERNAME: Andy.gong 11/20/2020 2:34 PM
FILENAME: P:\Wat\T35945 Lower Penitencia Creek\04 Design\Sheets\C-23.dwg

DOCUMENT NUMBER: XXXX-X-0000-0000000.00

REV	DESCRIPTION	DATE	APPR.	REFERENCE INFORMATION AND NOTES
	FINAL 11/20/2020			

TETRA TECH
17885 VON KARMAN AVE., SUITE 500
IRVINE, CA 92614

DATE 5/23/2019
DESIGN AWG
DRAWN AWG
CHECKED YHC

ENGINEERING CERTIFICATION
REGISTERED PROFESSIONAL ENGINEER ARIC TORRESDEY NO. 66968 EXP. 6-30-20 CIVIL STATE OF CALIFORNIA
PROJECT ENGINEER DATE

SANTA CLARA VALLEY WATER DISTRICT
Valley Water
PROJECT ENGINEER ACCEPTED BY DISTRICT DATE

PROJECT NAME AND SHEET DESCRIPTION:
LOWER PENITENCIA CREEK IMPROVEMENTS PROJECT
BERRYESSA CREEK CONFLUENCE AND PUMP STATION DETAILS

SCALE: AS SHOWN
VERIFY SCALES: 0 1" BAR IS ONE INCH ON ORIGINAL DRAWING IF NOT ONE INCH ON THIS SHEET, ADJUST SCALES ACCORDINGLY
PROJECT NUMBER: 40334005
SHEET CODE: C-23
SHEET NUMBER: 44 OF 90

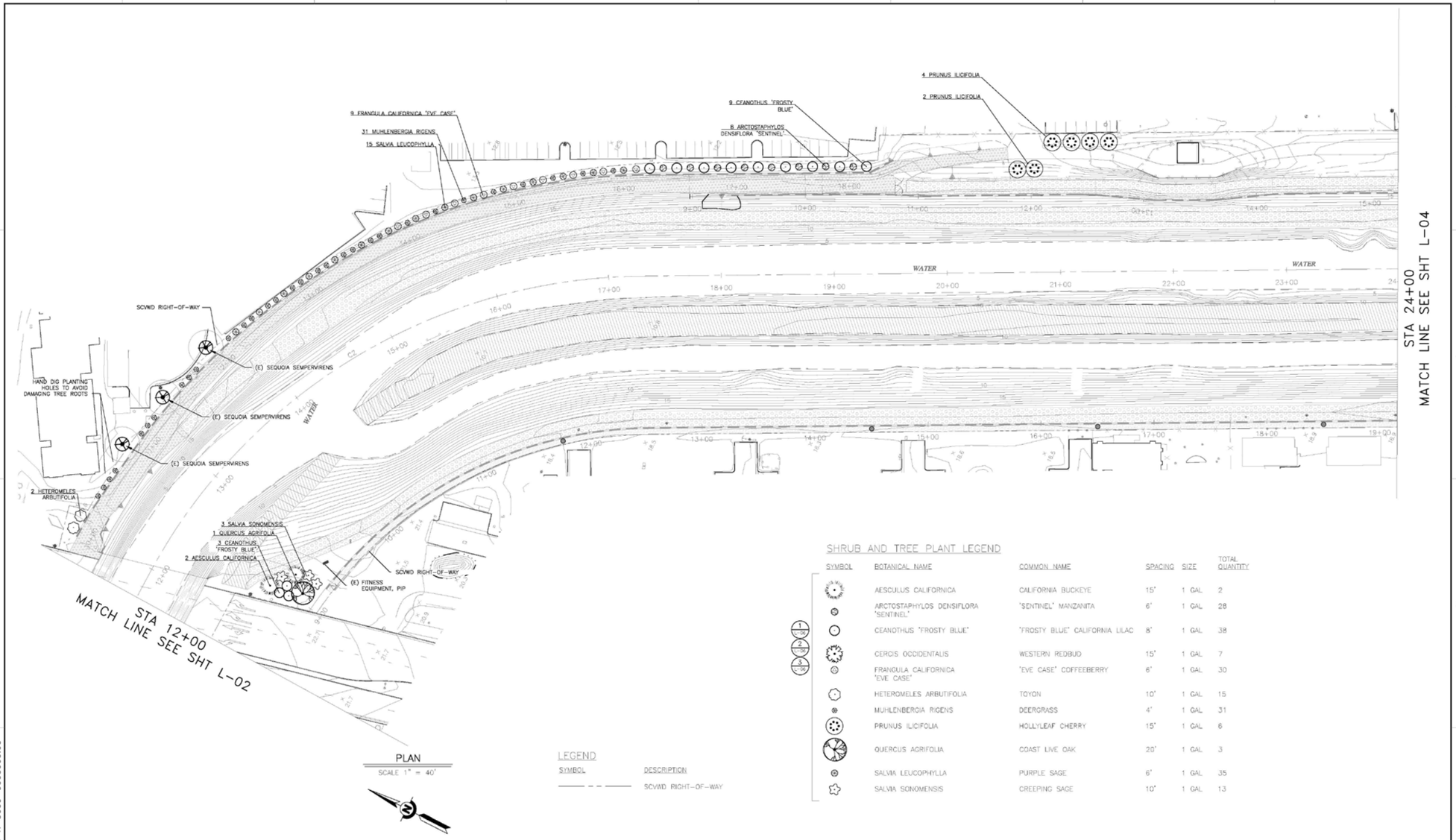
4 PRUNUS ILICIFOLIA
2 PRUNUS ILICIFOLIA
9 CEANOTHUS "FROSTY BLUE"
8 ARCTOSTAPHYLOS DENSIFLORA "SENTINEL"
9 FRANGULA CALIFORNICA "EVE CASE"
31 MUHLENBERGIA RIGENS
15 SALVIA LEUCOPHYLLA
WATER
WATER
SCVWD RIGHT-OF-WAY
(E) SEQUOIA SEMPERVIRENS
(E) SEQUOIA SEMPERVIRENS
(E) SEQUOIA SEMPERVIRENS
HAND DIG PLANTING HOLES TO AVOID DAMAGING TREE ROOTS
2 HETEROMELES ARBUTIFOLIA
3 SALVIA SONOMENSIS
1 QUERCUS AGRIFOLIA
3 CEANOTHUS "FROSTY BLUE"
2 AESCULUS CALIFORNICA
(E) FITNESS EQUIPMENT, PIP
SCVWD RIGHT-OF-WAY
STA 24+00
MATCH LINE SEE SHT L-04
STA 12+00
MATCH LINE SEE SHT L-02
PLAN
SCALE 1" = 40'
LEGEND
SYMBOL
DESCRIPTION
SCVWD RIGHT-OF-WAY
SHRUB AND TREE PLANT LEGEND
SYMBOL | BOTANICAL NAME | COMMON NAME | SPACING | SIZE | TOTAL QUANTITY
AESCULUS CALIFORNICA | CALIFORNIA BUCKEYE | 15' | 1 GAL | 2
ARCTOSTAPHYLOS DENSIFLORA "SENTINEL" | "SENTINEL" MANZANITA | 6' | 1 GAL | 28
CEANOTHUS "FROSTY BLUE" | "FROSTY BLUE" CALIFORNIA LILAC | 8' | 1 GAL | 38
CERCIS OCCIDENTALIS | WESTERN REDBUD | 15' | 1 GAL | 7
FRANGULA CALIFORNICA "EVE CASE" | "EVE CASE" COFFEEBERRY | 6' | 1 GAL | 30
HETEROMELES ARBUTIFOLIA | TOYON | 10' | 1 GAL | 15
MUHLENBERGIA RIGENS | DEERGRASS | 4' | 1 GAL | 31
PRUNUS ILICIFOLIA | HOLLYLEAF CHERRY | 15' | 1 GAL | 6
QUERCUS AGRIFOLIA | COAST LIVE OAK | 20' | 1 GAL | 3
SALVIA LEUCOPHYLLA | PURPLE SAGE | 6' | 1 GAL | 35
SALVIA SONOMENSIS | CREEPING SAGE | 10' | 1 GAL | 13
REV | DESCRIPTION | DATE | APPR. | REFERENCE INFORMATION AND NOTES
100% SUBMITTAL
11/02/2020
wra
ENVIRONMENTAL CONSULTANTS
2169-G East Francisco Blvd.
San Rafael, CA 94901
(415) 454-8868 Phone
(415) 454-0129 Fax
DATE 11/2/2020
DESIGN ICM
DRAWN ICM
CHECKED ICM
LANDSCAPE ARCHITECT STAMP
LANDSCAPE ARCHITECT DATE
SANTA CLARA VALLEY WATER DISTRICT
Valley Water
PROJECT ENGINEER
ACCEPTED BY DISTRICT
DATE
PROJECT NAME AND SHEET DESCRIPTION:
LOWER PENITENCIA CREEK IMPROVEMENTS PROJECT
PLANTING PLAN
A-LINE STA 12+00 TO STA 24+00
SCALE
AS SHOWN
VERIFY SCALES
BAR IS ONE INCH ON ORIGINAL DRAWING IF NOT ONE INCH ON THIS SHEET, ADJUST SCALES ACCORDINGLY
PROJECT NUMBER
SHEET CODE:
L-03
SHEET NUMBER:
60 OF 90
DOCUMENT NUMBER: XXXX-X-0000-0000000.00

EXHIBIT C
LCC and LPC City Approved Drawings for Improvement Removal and Replacement (continued)

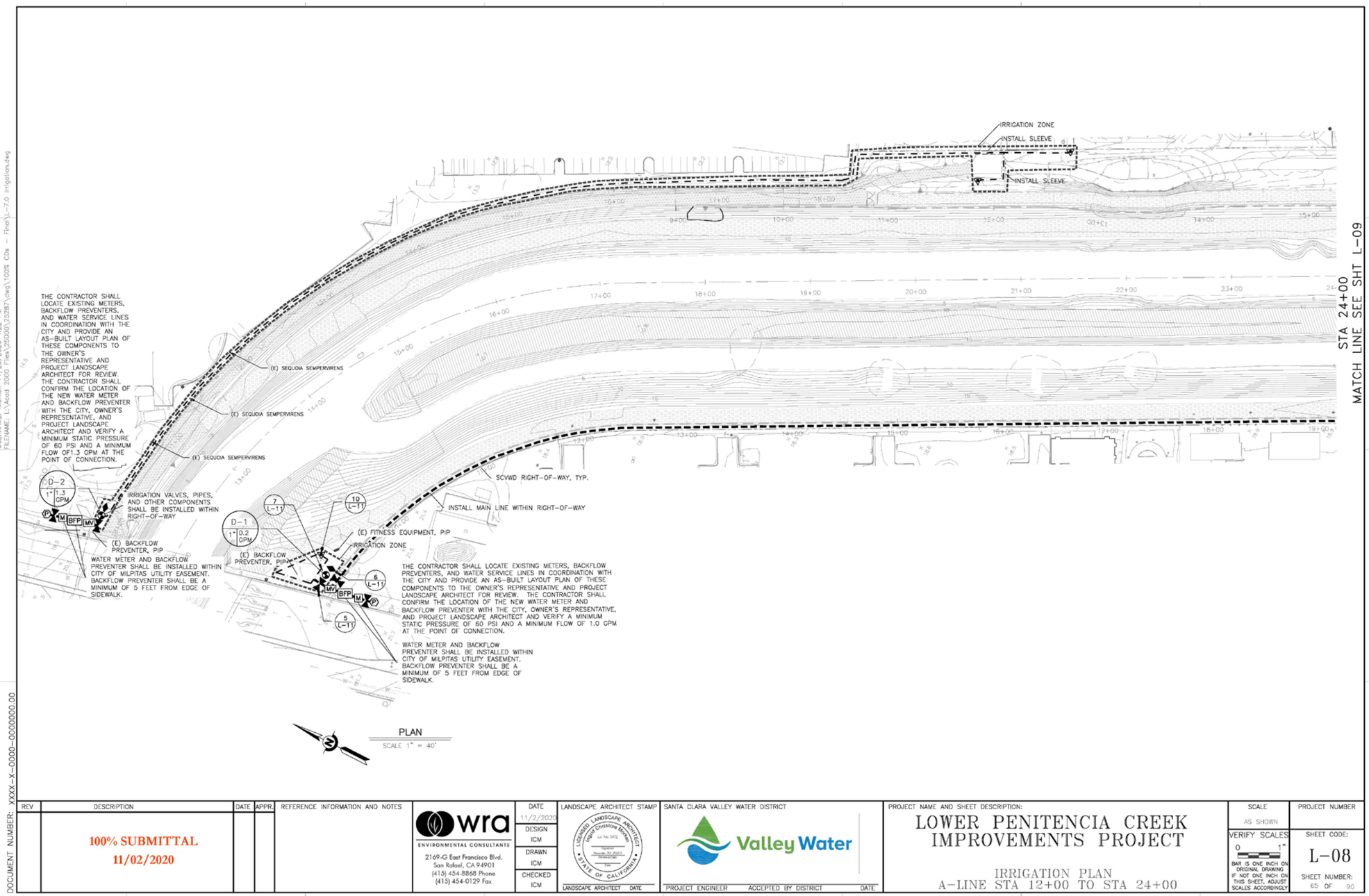

EXHIBIT C
LCC and LPC City Approved Drawings for Improvement Removal and Replacement (continued)

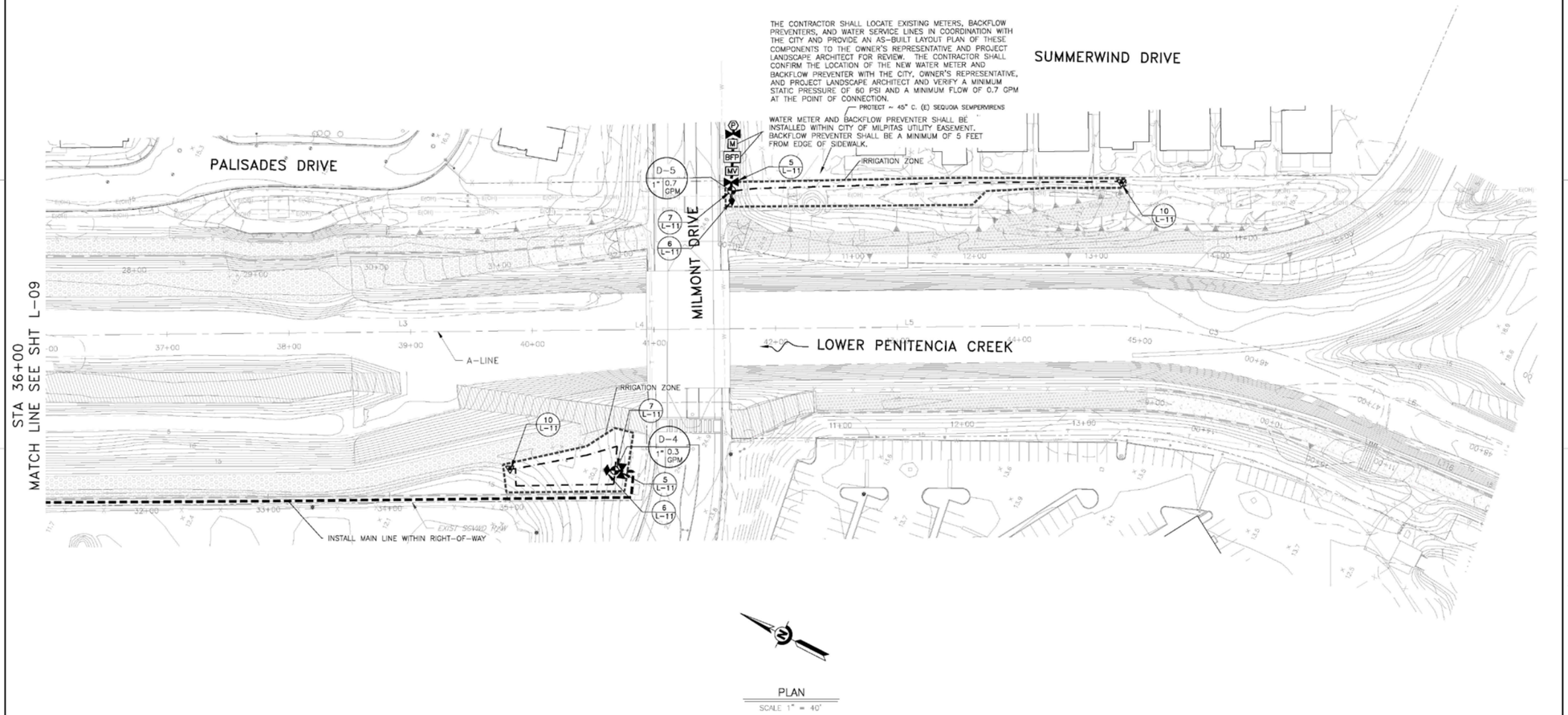

REV	DESCRIPTION	DATE	APPR.	REFERENCE INFORMATION AND NOTES
	100% SUBMITTAL 11/02/2020			

wra ENVIRONMENTAL CONSULTANTS
2169-G East Francisco Blvd.
San Rafael, CA 94901
(415) 454-8868 Phone
(415) 454-0129 Fax

DATE 11/2/2020
DESIGN ICM
DRAWN ICM
CHECKED ICM

LANDSCAPE ARCHITECT STAMP
LANDSCAPE ARCHITECT DATE

SANTA CLARA VALLEY WATER DISTRICT
Valley Water
PROJECT ENGINEER ACCEPTED BY DISTRICT DATE

PROJECT NAME AND SHEET DESCRIPTION:
LOWER PENITENCIA CREEK IMPROVEMENTS PROJECT
IRRIGATION PLAN
A-LINE STA 36+00 TO STA 48+00

SCALE AS SHOWN
VERIFY SCALES 0 1"
BAR IS ONE INCH ON ORIGINAL DRAWING IF NOT ONE INCH ON THIS SHEET, ADJUST SCALES ACCORDINGLY

PROJECT NUMBER
SHEET CODE: L-10
SHEET NUMBER: 67 OF 90

DOCUMENT NUMBER: XXXX-X-0000-0000000.00

EXHIBIT D
LCC and LPC Extent of Black Vinyl Fences

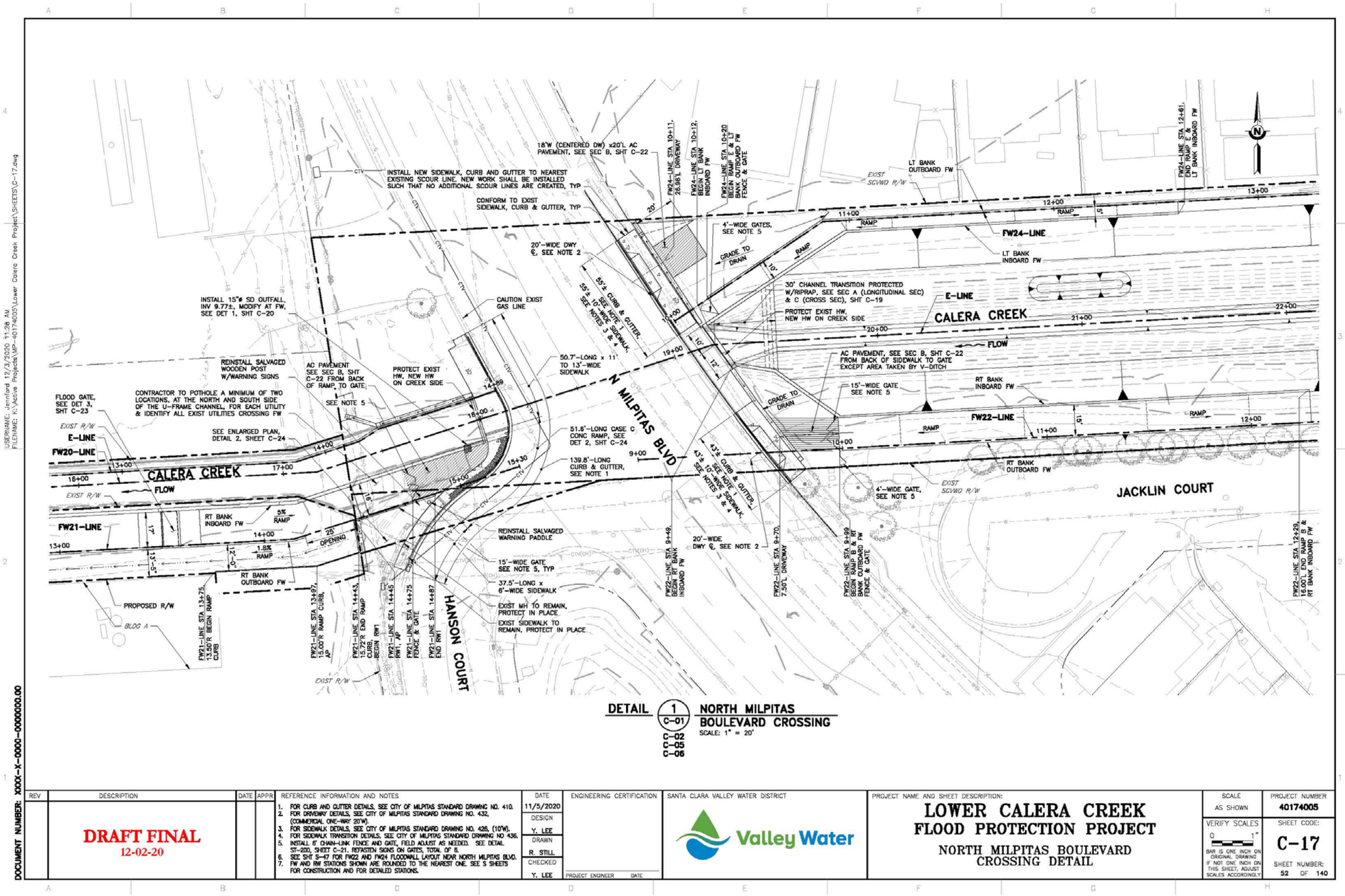

EXHIBIT D
LCC and LPC Extent of Black Vinyl Fences (continued)

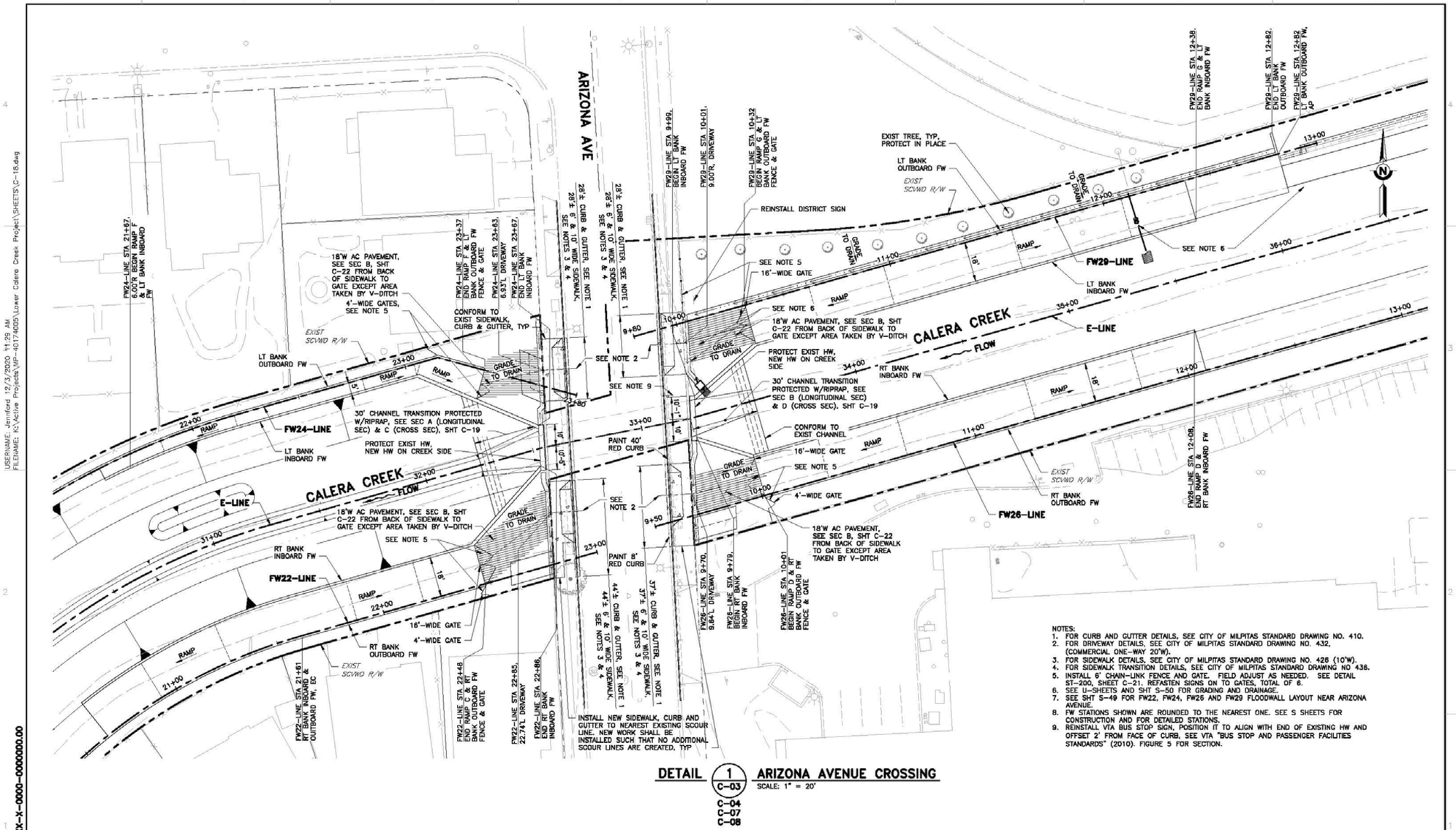

NOTES:
1. FOR CURB AND GUTTER DETAILS, SEE CITY OF MILPITAS STANDARD DRAWING NO. 410.
2. FOR DRIVEWAY DETAILS, SEE CITY OF MILPITAS STANDARD DRAWING NO. 432, (COMMERCIAL ONE-WAY 20'W).
3. FOR SIDEWALK DETAILS, SEE CITY OF MILPITAS STANDARD DRAWING NO. 426 (10'W).
4. FOR SIDEWALK TRANSITION DETAILS, SEE CITY OF MILPITAS STANDARD DRAWING NO 438.
5. INSTALL 6' CHAIN-LINK FENCE AND GATE. FIELD ADJUST AS NEEDED. SEE DETAIL ST-200, SHEET C-21. REFASTEN SIGNS ON TO GATES, TOTAL OF 6.
6. SEE U-SHEETS AND SHT S-50 FOR GRADING AND DRAINAGE.
7. SEE SHT S-49 FOR FW22, FW24, FW26 AND FW29 FLOODWALL LAYOUT NEAR ARIZONA AVENUE.
8. FW STATIONS SHOWN ARE ROUNDED TO THE NEAREST ONE. SEE S SHEETS FOR CONSTRUCTION AND FOR DETAILED STATIONS.
9. REINSTALL VTA BUS STOP SIGN, POSITION IT TO ALIGN WITH END OF EXISTING HW AND OFFSET 2' FROM FACE OF CURB, SEE VTA "BUS STOP AND PASSENGER FACILITIES STANDARDS" (2010). FIGURE 5 FOR SECTION.

DETAIL 1 (C-03) ARIZONA AVENUE CROSSING
SCALE: 1" = 20'
C-04
C-07
C-08

DOCUMENT NUMBER: XXXX-X-0000-0000000.00

USERNAME: Jennifer 12/3/2020 11:29 AM
FILENAME: K:\Active Projects\WP-40174005\Lower Calera Creek Project\SHEETS\C-18.dwg

REV	DESCRIPTION	DATE	APPR	REFERENCE INFORMATION AND NOTES	DATE 11/5/2020	ENGINEERING CERTIFICATION	SANTA CLARA VALLEY WATER DISTRICT	PROJECT NAME AND SHEET DESCRIPTION:	SCALE AS SHOWN	PROJECT NUMBER 40174005
	DRAFT FINAL 12-02-20				DESIGN Y. LEE		Valley Water	LOWER CALERA CREEK FLOOD PROTECTION PROJECT	VERIFY SCALES 0 1"	SHEET CODE:
					DRAWN R. STILL			ARIZONA AVENUE CROSSING DETAIL	BAR IS ONE INCH ON ORIGINAL DRAWING IF NOT ONE INCH ON THIS SHEET, ADJUST SCALES ACCORDINGLY	C-18
					CHECKED Y. LEE	PROJECT ENGINEER DATE				SHEET NUMBER: 53 OF 140

EXHIBIT D
LCC and LPC Extent of Black Vinyl Fences (continued)

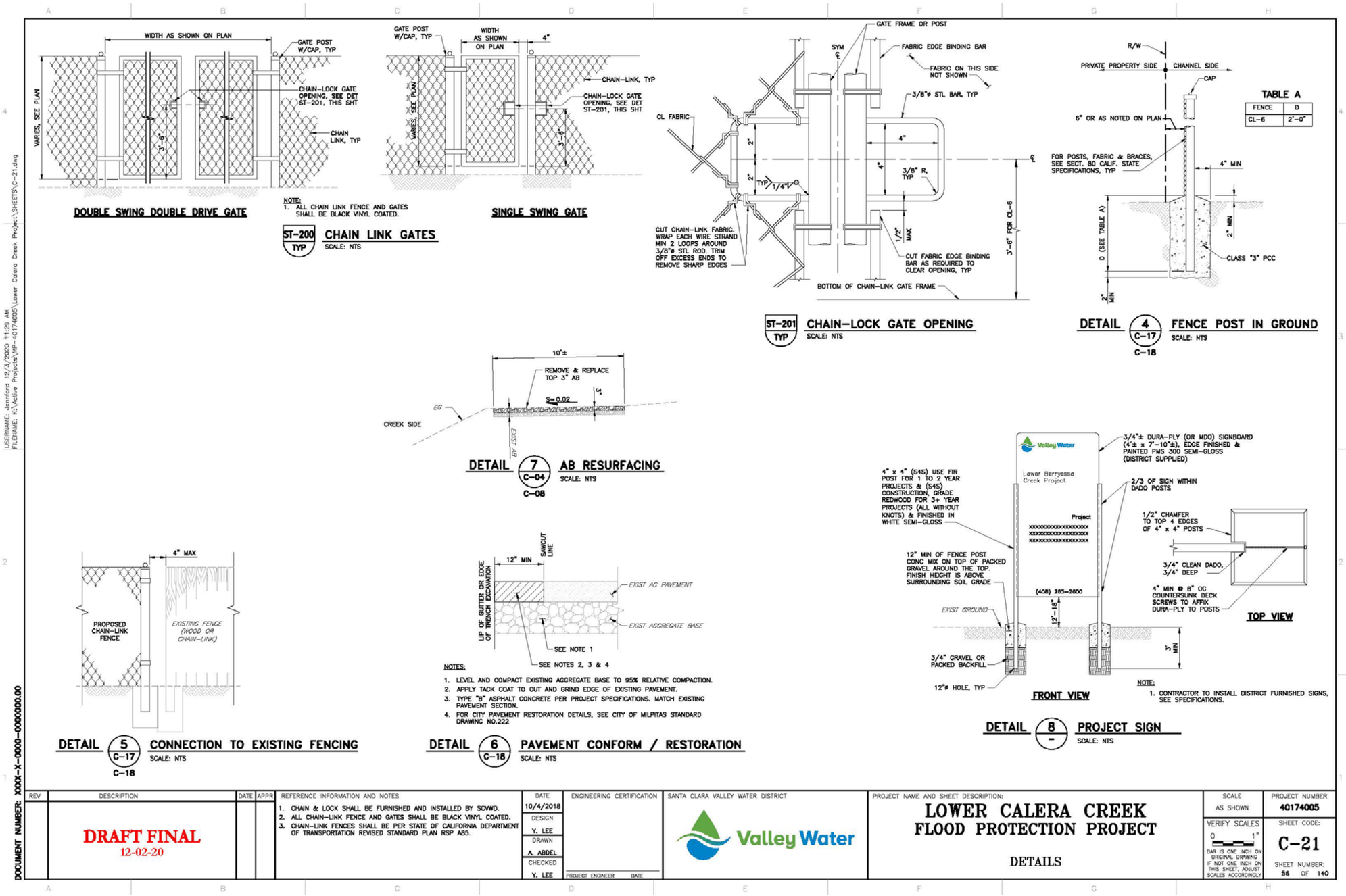

EXHIBIT D
LCC and LPC Extent of Black Vinyl Fences (continued)

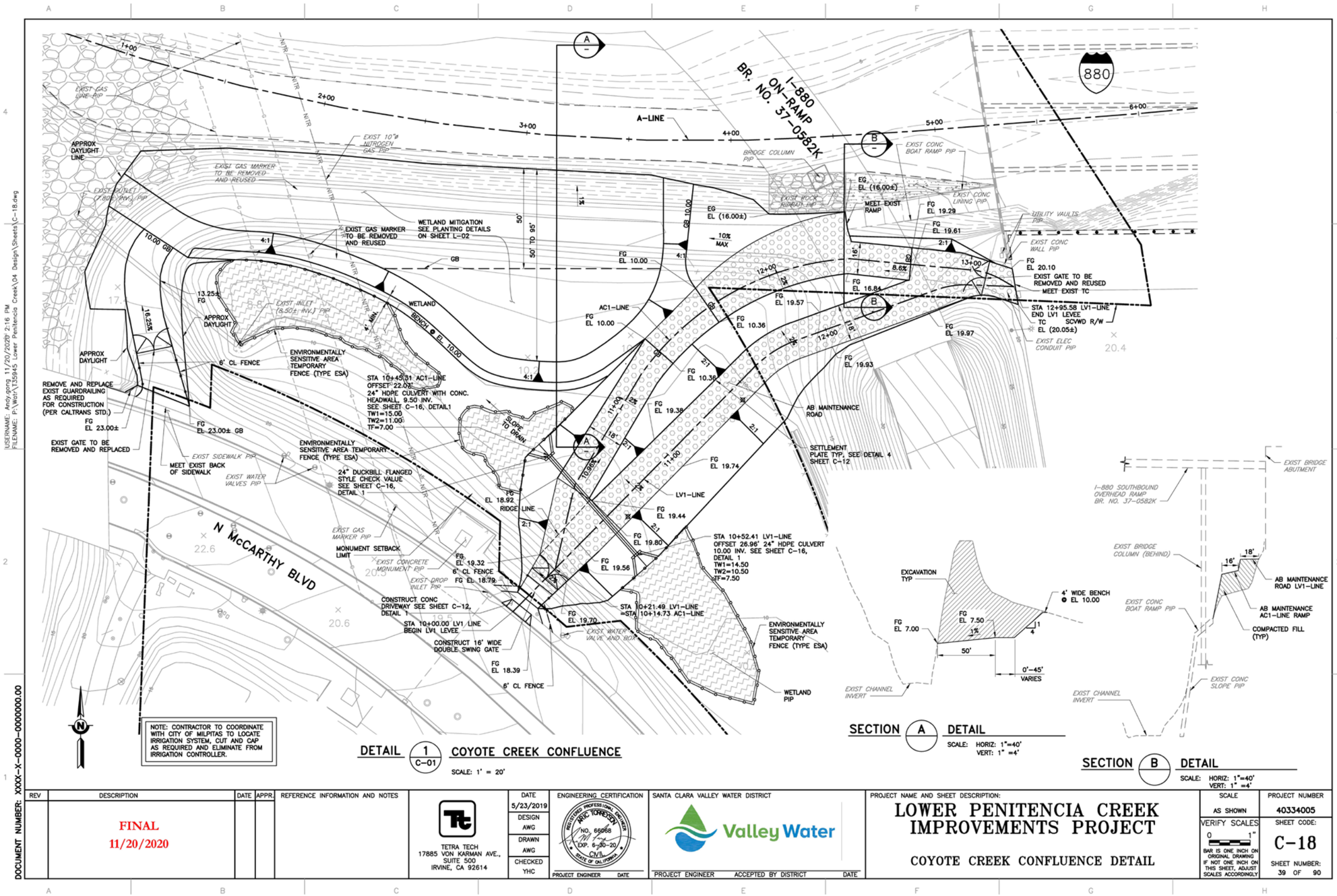

EXHIBIT E
LCC Headwall Structure at North Milpitas Boulevard and Arizona Avenue Bridges

HEADWALL GENERAL NOTES

DESIGN: AASHTO LRFD Bridge Design Specifications, 6th Edition, and Caltrans Amendments, Preface dated November 2014

US Army Corps of Engineers, "Retaining and Flood Walls" EM 1110-2-2502, September 1989

US Army Corps of Engineers, "Strength Design for Reinforced Concrete Hydraulic Structures" EM 1110-2-2104, November 2016

ACI 318-14, Building Code Requirements for Structural Concrete and Commentary, 2014.

HYDROSTATIC LOAD: 62.4 pcf

REINFORCED CONCRETE: f'c = 4,000 psi
fy = 60,000 psi

EXISTING CONCRETE: fy = 40,000 psi
f'c = 5,000 psi (assumed)

FLOODWALL GENERAL NOTES

DESIGN: US Army Corps of Engineers, "Retaining and Flood Walls" EM 1110-2-2502 September 1989
US Army Corps of Engineers, "Strength Design for Reinforced Concrete Hydraulic Structures" EM 1110-2-2104 November 2016

HYDROSTATIC LOAD: 62.4 pcf

SOIL PARAMETERS: γ = 125 pcf (typical)
Undrained condition: ϕ = 0 c = 800 psf
Drained condition: ϕ = 32 c = 0 psf
Soil Bearing Pressure 10,500 psf (ultimate)
Coefficient of friction 0.4 (ultimate)

EARTH LOAD: Active 85 pcf level backfill
Passive 235 pcf

REINFORCED CONCRETE: f'c = 4000 psi
fy = 60,000 psi
γ = 150 pcf (unit weight)

SEISMIC: pga = 0.43g
Load = 13 pcf

CONSTRUCTION LOADING: 2 ft level earth (surcharge)

INDEX TO PLANS

SHEET	TITLE
S-41	GENERAL NOTES
S-42	KEY PLAN
S-43	HEADWALL GENERAL PLAN
S-44	UPRR HEADWALL EXTENSIONS
S-45	HEADWALL DETAILS NO 1
S-46	HEADWALL DETAILS NO 2
S-47	FLOODWALL PLAN NO 1
S-48	FLOODWALL PLAN NO 2
S-49	FLOODWALL PLAN NO 3
S-50	FLOODWALL PLAN NO 4
S-51	FLOODWALL ELEVATION NO 1
S-52	FLOODWALL ELEVATION NO 2
S-53	FLOODWALL ELEVATION NO 3
S-54	FLOODWALL ELEVATION NO 4
S-55	FLOODWALL ELEVATION NO 5
S-56	FLOODWALL ELEVATION NO 6
S-57	FLOODWALL ELEVATION NO 7
S-58	FLOODWALL ELEVATION NO 8
S-59	FLOODWALL DETAILS NO 1
S-60	FLOODWALL DETAILS NO 2

INDEX TO CALTRANS STANDARD PLANS (2015)

A1A	ABBREVIATIONS (SHEET 1 OF 3)
A1B	ABBREVIATIONS (SHEET 2 OF 3)
A1C	ABBREVIATIONS (SHEET 3 OF 3)
A10A	LEGEND LINES AND SYMBOLS (SHEET 1 OF 5)
B0-1	BRIDGE DETAILS
B0-3	BRIDGE DETAILS
B0-13	BRIDGE DETAILS
B3-5	RETAINING WALL DETAILS No. 1

GENERAL NOTES

1. ALL EXISTING FACILITIES, STRUCTURES, TREES, FENCES, LANDSCAPING, ETC., DESIGNATED "EXIST." OR SHOWN EXISTING (DASHED LINES) ARE TO REMAIN. ONLY THOSE SPECIFICALLY DESIGNATED FOR REMOVAL OR DEMOLITION AS SHOWN ON THE CIVIL DRAWINGS, OR AS DIRECTED BY THE ENGINEER MUST BE REMOVED.
2. ALL REFERENCES MADE TO RIGHT OR LEFT AND ALL CROSS-SECTIONS SHOWN ON THE PLANS ARE VIEWED LOOKING UPSTREAM/UPSTATION.
3. LOCATIONS AND DEPTHS OF EXISTING UNDERGROUND UTILITIES AS SHOWN ON THE PLANS ARE BASED ON INFORMATION FROM THE UTILITY AND ARE TO BE CONSIDERED AS APPROXIMATE ONLY.
4. PRIOR TO PERFORMING ANY WORK IN THE VICINITY OF EXISTING UNDERGROUND UTILITIES, THE CONTRACTOR MUST VERIFY THEIR LOCATIONS AND DEPTHS AND TAKE PROPER PRECAUTIONS TO AVOID ANY DAMAGE TO THEM.
5. THE CONTRACTOR VEHICLES SHALL NOT PARK ALONG THE LEVEE ACCESS ROAD AT ANY TIME. AND CONSTRUCTION OPERATIONS MUST BE CONDUCTED IN SUCH A MANNER AS TO CAUSE AS LITTLE INCONVENIENCE AS POSSIBLE TO THE RESIDENTS.
6. THE CONTRACTOR MUST INSTALL TEMPORARY FENCES AND OTHER WARNING SIGNS OR DEVICES PER SPECIFICATIONS.
7. SEE SPECIFICATIONS FOR THE RELEVANT GEOTECHNICAL DATA AND SOILS OF BORINGS.
8. IN CURVED SEGMENTS, TRANSVERSE REINFORCEMENT MUST BE PLACED RADIAL TO THE WALL LAYOUT LINE WITH THE SPACING TO BE APPLIED AT THE OUTSIDE OF THE CURVE UNLESS NOTED OTHERWISE ON THE DRAWINGS.
9. CONTRACTOR MUST FIELD VERIFY ALL LAYOUTS, EXISTING CONSTRUCTION AND CONTROLLING FIELD DIMENSIONS PRIOR TO ORDERING OR FABRICATING ANY MATERIALS.
10. SEE CIVIL AND GENERAL SHEETS FOR ADDITIONAL INFORMATION NOT NOTED ON PLANS.

LEGEND:

B0-13 / 15-4 — INDICATES STATE OF CALIFORNIA STANDARD PLAN SHEET NUMBER

INDICATES EXISTING STRUCTURE

INDICATES STRUCTURE REMOVAL (PORTION)

USERNAME: SM4 FR 18 Dec 2020 01:13pm
FILENAME: W:\2016\3016135\Task_01 & 02-Lower_Calera_CK\20181335541

DOCUMENT NUMBER: CAE_CY-S-4018-66001

REV	DESCRIPTION	DATE	APPR	REFERENCE INFORMATION AND NOTES

BIGGS CARDOSA ASSOCIATES INC
STRUCTURAL ENGINEERS
BCA
865 The Alameda
San Jose, California 95126
408-296-5515

DATE 11/1/19
DESIGN G. TOLAN
DRAWN D. MANCINI
CHECKED D. DEVLIN

ENGINEERING CERTIFICATION
PROJECT ENGINEER DATE 11/1/19

SANTA CLARA VALLEY WATER DISTRICT
Valley Water
PROJECT ENGINEER DATE 12/30/20

PROJECT NAME AND SHEET DESCRIPTION:
LOWER CALERA CREEK FLOOD PROTECTION PROJECT
GENERAL NOTES

SCALE AS SHOWN
VERIFY SCALES 0 1"
BAR IS ONE INCH ON ORIGINAL DRAWING. IF NOT ONE INCH ON THIS SHEET, ADJUST SCALES ACCORDINGLY

PROJECT NUMBER 40174005
SHEET CODE: S-41
PAGE NUMBER: 95 OF 140

EXHIBIT E
LCC Headwall Structure at North Milpitas Boulevard and Arizona Avenue Bridges (continued)

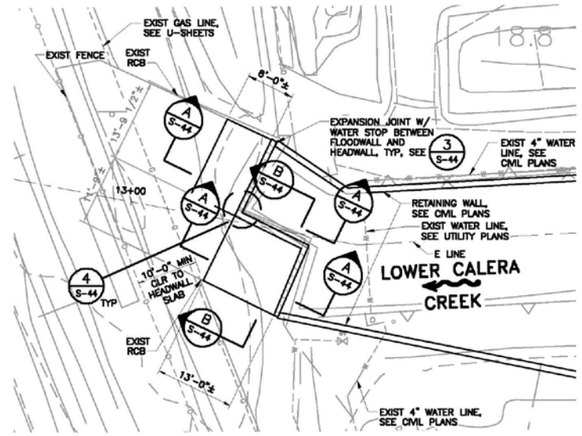

VTA/BART UPSTREAM HEADWALL

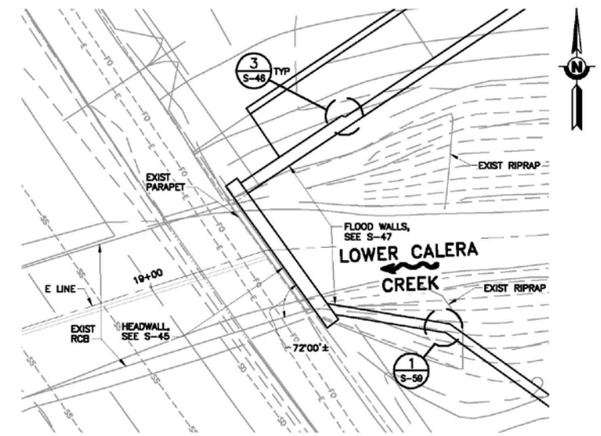

N MILPITAS UPSTREAM HEADWALL

PLAN
SCALE: 1" = 10'

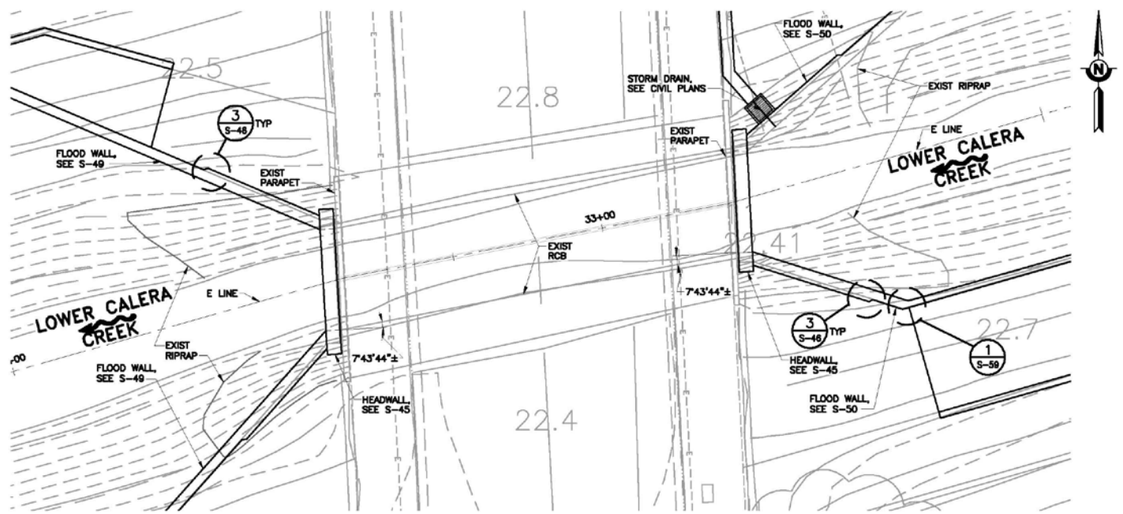

ARIZONA DOWNSTREAM HEADWALL

PLAN
SCALE: 1" = 10'

ARIZONA UPSTREAM HEADWALL

NOTE:
1. SEE CIVIL PLANS FOR ROCK SLOPE PROTECTION EXTENTS AND DETAILS.
2. WORK SHALL BE STAGED SO THAT ONLY ONE SIDEWALK ALONG ARIZONA AVE OR NORTH MILPITAS BLVD SHALL BE CLOSED AT ANY TIME.

REV	DESCRIPTION	DATE	APPR.	REFERENCE INFORMATION AND NOTES

BIGGS CARDOSA ASSOCIATES INC
STRUCTURAL ENGINEERS
BCA
565 The Alameda
San Jose, California 95126
408-286-8515

DATE 12/18/20
DESIGN G. TOLAN
DRAWN D. MANCINI
CHECKED D. DEVLIN

ENGINEERING CERTIFICATION
Exp. 12/31/20
PROJECT ENGINEER 12/18/20 DATE

SANTA CLARA VALLEY WATER DISTRICT
Valley Water
PROJECT ENGINEER DATE 12/30/20

PROJECT NAME AND SHEET DESCRIPTION:
LOWER CALERA CREEK
FLOOD PROTECTION PROJECT
HEADWALL GENERAL PLAN

SCALE: AS SHOWN
VERIFY SCALES 0 1"
BAR IS ONE INCH ON ORIGINAL DRAWING IF NOT ONE INCH ON THIS SHEET, ADJUST SCALES ACCORDINGLY

PROJECT NUMBER: 40174005
SHEET CODE: S-43
PAGE NUMBER: 98 OF 140

DOCUMENT NUMBER: CAE_CY-S-4018-66003
USERNAME: SMH FRI 18 Dec 2020 11:37am

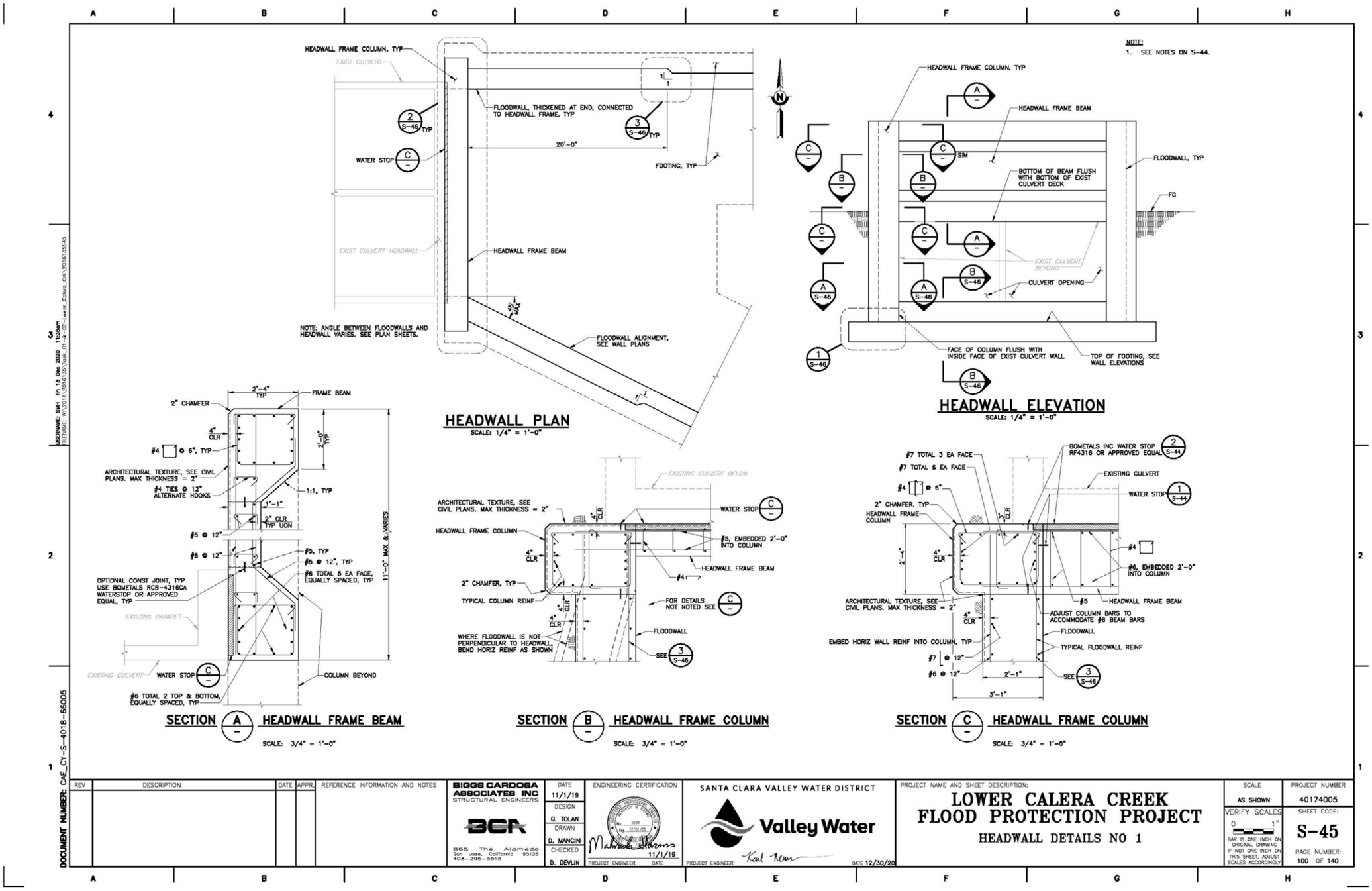
HEADWALL FRAME COLUMN, TYP
EXIST CULVERT
FLOODWALL, THICKENED AT END, CONNECTED TO HEADWALL FRAME, TYP
WATER STOP
20'-0"
FOOTING, TYP
EXIST CULVERT HEADWALL
HEADWALL FRAME BEAM
NOTE: ANGLE BETWEEN FLOODWALLS AND HEADWALL VARIES. SEE PLAN SHEETS.
FLOODWALL ALIGNMENT, SEE WALL PLANS
HEADWALL PLAN
SCALE: 1/4" = 1'-0"
NOTE:
1. SEE NOTES ON S-44.
HEADWALL FRAME COLUMN, TYP
HEADWALL FRAME BEAM
FLOODWALL, TYP
BOTTOM OF BEAM FLUSH WITH BOTTOM OF EXIST CULVERT DECK
EXIST CULVERT BEYOND
CULVERT OPENING
FACE OF COLUMN FLUSH WITH INSIDE FACE OF EXIST CULVERT WALL
TOP OF FOOTING, SEE WALL ELEVATIONS
HEADWALL ELEVATION
SCALE: 1/4" = 1'-0"
2" CHAMFER
FRAME BEAM
ARCHITECTURAL TEXTURE, SEE CIVIL PLANS. MAX THICKNESS = 2"
#4 TIES @ 12" ALTERNATE HOOKS
#5, TYP
#6 TOTAL 5 EA FACE, EQUALLY SPACED, TYP
OPTIONAL CONST JOINT, TYP USE BOMETALS RCB-4316CA WATERSTOP OR APPROVED EQUAL, TYP
EXISTING PARAPET
EXISTING CULVERT
WATER STOP
COLUMN BEYOND
#6 TOTAL 2 TOP & BOTTOM, EQUALLY SPACED, TYP
11'-0" MAX. & VARIES
SECTION A HEADWALL FRAME BEAM
SCALE: 3/4" = 1'-0"
EXISTING CULVERT BELOW
HEADWALL FRAME COLUMN
TYPICAL COLUMN REINF
WHERE FLOODWALL IS NOT PERPENDICULAR TO HEADWALL BEND HORIZ REINF AS SHOWN
FOR DETAILS NOT NOTED SEE
FLOODWALL
SECTION B HEADWALL FRAME COLUMN
SCALE: 3/4" = 1'-0"
#7 TOTAL 3 EA FACE
#7 TOTAL 6 EA FACE
BOMETALS INC WATER STOP RF4316 OR APPROVED EQUAL
EXISTING CULVERT
HEADWALL FRAME COLUMN
#6, EMBEDDED 2'-0" INTO COLUMN
ADJUST COLUMN BARS TO ACCOMMODATE #6 BEAM BARS
EMBED HORIZ WALL REINF INTO COLUMN, TYP
TYPICAL FLOODWALL REINF
SECTION C HEADWALL FRAME COLUMN
SCALE: 3/4" = 1'-0"
DOCUMENT NUMBER: CAE_CY-S-4018-65005
REV
DESCRIPTION
DATE
APPR.
REFERENCE INFORMATION AND NOTES
BIGGS CARDOSA ASSOCIATES INC
STRUCTURAL ENGINEERS
BCA
865 The Alameda
San Jose, California 95126
408-296-3513
DATE 11/1/19
DESIGN G. TOLAN
DRAWN D. MANCINI
CHECKED D. DEVLIN
ENGINEERING CERTIFICATION
PROJECT ENGINEER
DATE 11/1/19
SANTA CLARA VALLEY WATER DISTRICT
Valley Water
PROJECT ENGINEER
DATE 12/30/20
PROJECT NAME AND SHEET DESCRIPTION:
LOWER CALERA CREEK FLOOD PROTECTION PROJECT
HEADWALL DETAILS NO 1
SCALE
AS SHOWN
VERIFY SCALES
BAR IS ONE INCH ON ORIGINAL DRAWING IF NOT ONE INCH ON THIS SHEET, ADJUST SCALES ACCORDINGLY
PROJECT NUMBER
40174005
SHEET CODE:
S-45
PAGE NUMBER:
100 OF 140

NOTES:
1. SEE NOTES ON S-44.

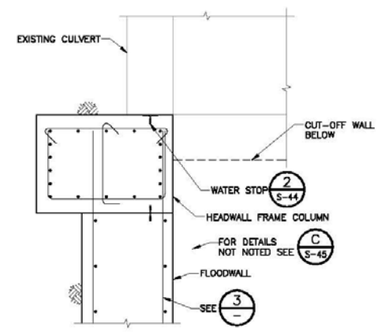

SECTION A S-45 HEADWALL FRAME COLUMN
SCALE: 3/4" = 1'-0"

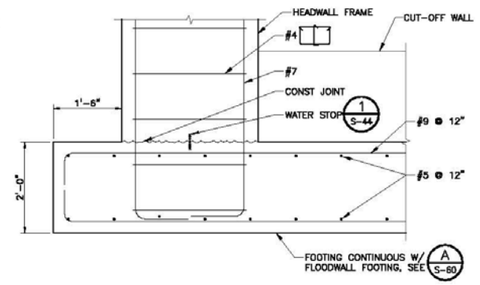

DETAIL 1 S-45 HEADWALL FRAME FOOTING
SCALE: 3/4" = 1'-0"

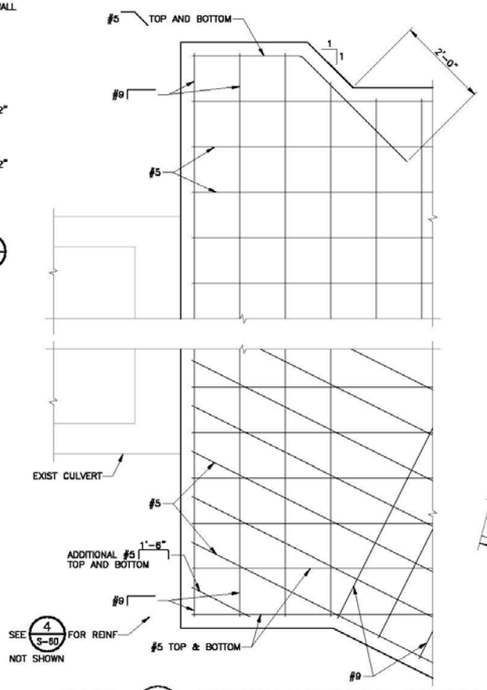

DETAIL 2 S-45 HEADWALL/FLOODWALL FOOTING
SCALE: 3/4" = 1'-0"

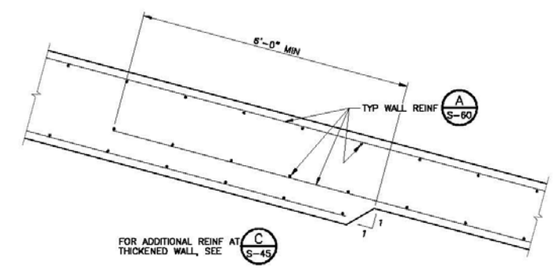

DETAIL 3 S-43 S-45 THICKENED WALL TRANSITION
SCALE: 3/4" = 1'-0"

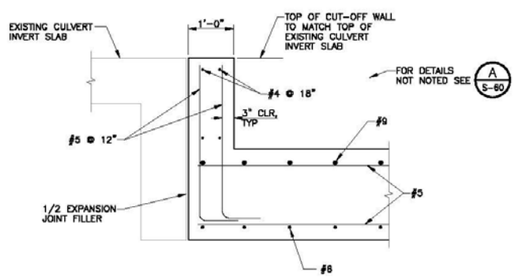

SECTION B S-45 CUTOFF WALL
SCALE: 3/4" = 1'-0"

REV	DESCRIPTION	DATE	APPR	REFERENCE INFORMATION AND NOTES

BIGGS CARDOSA ASSOCIATES INC
STRUCTURAL ENGINEERS
BCA
865 The Alameda
San Jose, California 95126
408-296-8515

DATE 11/1/19
DESIGN G. TOLAN
DRAWN D. MANCINI
CHECKED D. DEVLIN

ENGINEERING CERTIFICATION
PROJECT ENGINEER 11/1/19 DATE

SANTA CLARA VALLEY WATER DISTRICT
Valley Water
PROJECT ENGINEER DATE 12/30/20

PROJECT NAME AND SHEET DESCRIPTION:
LOWER CALERA CREEK FLOOD PROTECTION PROJECT
HEADWALL DETAILS NO 2

SCALE: AS SHOWN
VERIFY SCALES: 0 1"
BAR IS ONE INCH ON ORIGINAL DRAWING IF NOT ONE INCH ON THIS SHEET, ADJUST SCALES ACCORDINGLY

PROJECT NUMBER: 40174005
SHEET CODE: S-46
PAGE NUMBER: 101 OF 140

DOCUMENT NUMBER: CAE_CY-S-4018-66006
ASBUILT: SMH FRI 18 Dec 2020 11:38am
DESIGNED: K:\2018\32018 \32018_01-14-22-Lower_Calera_C-1\2018135546

EXHIBIT F
Estimated Cost of City Improvement Work and Payment to Valley Water

Lower Berryessa Creek (LBC) Costs		
Item No.	Description of Item	Cost
1	Pedestrian Bridge Design	$73,500
2	Construction Management	$67,000
3	Storm Drain Outfall Modifications	$30,000
4	Berryessa Pump Station Outfall Pipe Modifications	$140,000
5	Aspahlt Concrete Pedestrian Path (N. Milpitas Blvd to Pedestrian Bridge)	$96,700
6	Raised Pedestrian Bridge	$120,000
7	Retaining Walls at Pedestrian Bridge	$180,000
8	Pedestrian Ramps (AC and PCC)	$105,000
9	Guardrailing/Handrailing Pedestrian Ramps	$275,500
	Total LBC Costs	$1,087,700
	Credit for UBC landscape damages	<$41,125>
	Final Payment per Section 5.h.	**$1,046,575**

Lower Penitencia Creek (LPC) Costs		
Item No.	Description of Item	Cost
1	Demolition/Disposal of City Trail	$70,000
2	New Asphalt Pavement City Pedestrian Trail	$70,000
3	Concrete Paved City Pedestrian Trial	$72,000
4	Installtion of duckbill check valves for storm drain outfalls at the California Circle and Abott Ave pump stations and storm drain outfalls located upstream of Interstate 880	$80,000
	Subtotal LPC Costs	**$292,000**
	15% Contingency Costs	**$43,800**
	Total LPC Costs	**$335,800**
	10% Initial Payment per Section 5.g.	$33,580
	80% Payment per Section 5.g.	$268,640
	10% Final Payment per Section 5.g.	$33,580

Lower Calera Creek (LCC) Costs		
Item No.	Description of Item	Cost
1	Modify four (4) existing storm drain outfalls and install check valves	$19,200
2	Additional Asphalt Concrete Trail at LBC	$227,000
	Subtotal LCC Costs	**$246,200**
	15% Contingency Costs	**$36,930**
	Total LCC Costs	**$283,130**
	10% Initial Payment per Section 5.h.	$28,315
	80% Payment per Section 5.h.	$226,500
	10% Final Payment per Section 5.h.	$28,315

EXHIBIT G
LCC and LPC List of City Improvement Work

Lower Calera Creek (LCC) Project

1. Modify two existing 15-inch and 18-inch storm drain outfalls, located between N. Milpitas Blvd and the railroad crossing, including either duckbill or flap gate check valves

2. Extend two existing 18-inch and 36-inch storm drain outfalls, located upstream of Arizona Ave, including either duckbill or flap gate check valves

3. Install approximately 4,050 feet of new asphalt pavement pedestrian trail overlain the existing levee maintenance road along Lower Berryessa Creek, Phase 2 between Calaveras Blvd and Abel St.

Lower Penitencia Creek (LPC) Project

1. Remove and replace three existing 28-inch storm drain outfalls at the California Circle Pump Station with new 36-inch outfalls equipped with duckbill check valves

2. Remove and replace two existing 18-inch storm drain outfalls at the Abbot Ave Pump Station with new 24-inch outfalls equipped with duckbill check valves

3. Modify existing 24-inch storm drain outfall, located between Interstate 880 and California Circle, including duckbill check valve

4. Remove and replace the existing City trail and existing irrigation adjacent to the trail within in-kind surface material and irrigation

Santa Clara Valley Water District

File No.: 21-0072

Agenda Date: 1/26/2021
Item No.: *9.1.

BOARD AGENDA MEMORANDUM

SUBJECT:
Valley Water Comprehensive Annual Financial Report for the Fiscal Year Ended June 30, 2020, *and other Independent Auditor's Reports.

RECOMMENDATION:
Accept the Comprehensive Annual Financial Report for the Fiscal Year Ended June 30, 2020, *and other Independent Auditor's Reports.

SUMMARY:
The Comprehensive Annual Financial Report (CAFR) for the fiscal year ended June 30, 2020 was audited by the District's external auditor, Maze and Associates. As of the time of the writing of this memo, the CAFR had not yet been reviewed by the Board Audit Committee. The Board Audit Committee will discuss the CAFR at their meeting on January 13, 2021. Upon receiving a recommendation from the Board Audit Committee to proceed, staff will submit the Fiscal Year 2020 CAFR and any corresponding Independent Auditor Reports via a supplemental agenda.

*The Comprehensive Annual Financial Report (CAFR) for the fiscal year ended June 30, 2020 was audited by Valley Water's external auditor, Maze and Associates. During the audit, no material financial findings or internal control weaknesses were reported. The auditor has issued an unmodified ("clean") opinion dated January 13, 2021 stating that the District's financial statements are fairly presented in conformity with Generally Accepted Accounting Principles (GAAP), as established by the Governmental Accounting Standards Board (GASB). The auditor prepares additional assurance letters and reports, in accordance with attestation standards established by the American Institute of Certified Public Accountants. The Memorandum of Internal Controls and Required Communications are attached (See Attachments 2 through 5).

*The CAFR complies with the following requirements:

1. *Board Policy BL-5.2 which requires the monitoring and reporting of financial conditions and activities to be performed annually by an external method.
2. *State Law (Government Code Section 26909) which requires an annual examination and audit of the District's financial records.

*Each year since 1997, the District has been awarded the prestigious Certificate of Achievement for

Excellence in Reporting by the Government Finance Officers Association of the United States and Canada (GFOA).

*The Board Audit Committee discussed the CAFR at their meeting on January 13, 2021 and recommends that water inventory be recognized as an asset on the financial statements included in the Fiscal Year (FY) 20 CAFR.

*Valley Water has not recognized water inventory as an asset in the past, and there is no legal or accounting rules board requirement to do so. A review of California Water Enterprise Special Districts shows that some agencies carry water inventory as an asset, and some do not.

*Agencies that do include:

- *Metropolitan Water District
- *Easter Municipal water District
- *Irvine Ranch Water District
- *San Diego County Water Authority
- *Santa Margarita Water District

*Agencies that do not include:

- *East Bay Municipal Utility District
- *Contra Costa Water District
- *Alameda County Water District
- *Orange County Water District
- *Marin Municipal Water District

*As of June 30, 2020, Valley Water had 344,662 acre-feet (out of a 350,000 acre-feet allocation) in Semitropic groundwater reserves. Utilizing a three-year average rate of $331 acre-foot cost, the current valuation is approximately $114 million. In addition, there was 61,462 acre-feet in local reservoir storage as of June 30, 2020. The vast majority of the water stored in local reservoirs comes from local runoff, as opposed to purchased imported water. As a proxy, applying the same per acre-foot cost results in a current valuation of $20 million.

*Groundwater in Santa Clara County is not owned by Valley Water, and therefore would not be inventoried, and other types of water inventory, such as water at treatment plants are relatively small, and therefore would be immaterial.

*Per discussion with Valley Water's Bond Counsel and Financial Advisor, increasing assets on the balance sheet is likely to have minimal impact on Valley Water's credit ratings since Valley Water debt is secured by current revenues, not assets on the balance sheet which may be more typical for corporations. Instead, Valley Water's financial strengths for credit rating purposes are heavily dependent upon its management experience, Board willingness to raise rates to generate current revenues for current expense, debt service coverage ratio (two times net revenues or better), strength of local economy, and cash reserve balances (days cash on hand to cover operating expense).

*For transparency purposes, the Board Audit Committee recommends recognizing water inventory as an asset. As such, the attached FY 20 CAFR, which has been submitted to the Board for acceptance, includes water inventory as an asset.

FINANCIAL IMPACT:
Auditing services costs are included in the FY 2020-21 budget.

CEQA:
The recommended action does not constitute a project under CEQA because it does not have a potential for resulting in direct or reasonably foreseeable indirect physical change in the environment.

ATTACHMENTS:
*Original Agenda Memorandum
*Supplemental Agenda Memorandum
*Supplemental Attachment 1: FY 2019-20 CAFR
*Supplemental Attachment 2: Memorandum of Internal Controls
*Supplemental Attachment 3: Investment Policy Compliance
*Supplemental Attachment 4: Article XIII-B Appropriations Procedure
*Supplemental Attachment 5: Travel and Subsistence Policy Compliance

UNCLASSIFIED MANAGER:
Darin Taylor, 408-630-3068

THIS PAGE INTENTIONALLY LEFT BLANK

Santa Clara Valley Water District

File No.: 21-0061

Agenda Date: 1/26/2021
Item No.: 9.1.

BOARD AGENDA MEMORANDUM

SUBJECT:
Valley Water Comprehensive Annual Financial Report for the Fiscal year Ending on June 30, 2020.

RECOMMENDATION:
Accept the Comprehensive Annual Financial Report for the Fiscal Year Ended June 30, 2020 and other Independent Auditor's Reports.

SUMMARY:
The Comprehensive Annual Financial Report (CAFR) for the fiscal year ended June 30, 2020 was audited by the District's external auditor, Maze and Associates. As of the time of the writing of this memo, the CAFR had not yet been reviewed by the Board Audit Committee. The Board Audit Committee will discuss the CAFR at their meeting on January 13, 2021. Upon receiving a recommendation from the Board Audit Committee to proceed, staff will submit the Fiscal Year 2020 CAFR and any corresponding Independent Auditor Reports via a supplemental agenda.

FINANCIAL IMPACT:
Auditing services costs are included in the FY 2020-21 budget.

CEQA:
The recommended action does not constitute a project under CEQA because it does not have a potential for resulting in direct or reasonably foreseeable indirect physical change in the environment.

ATTACHMENTS:
None.

UNCLASSIFIED MANAGER:
Darin Taylor, 408-630-3068

THIS PAGE INTENTIONALLY LEFT BLANK

Santa Clara Valley Water District

File No.: 21-0069

Agenda Date: 1/26/2021
Item No.: *9.1.

SUPPLEMENTAL BOARD AGENDA MEMORANDUM

SUBJECT:
Valley Water Comprehensive Annual Financial Report for the Fiscal Year Ended June 30, 2020, *and other Independent Auditor's Reports.

REASON FOR SUPPLEMENTAL MEMORANDUM:
This report conveys additional information received after the initial board agenda memo was released, consistent with Executive Limitations Policy EL-7-10-5.

RECOMMENDATION:
Accept the Comprehensive Annual Financial Report for the Fiscal Year Ended June 30, 2020, *and other Independent Auditor's Reports.

SUMMARY:
The Comprehensive Annual Financial Report (CAFR) for the fiscal year ended June 30, 2020 was audited by Valley Water's external auditor, Maze and Associates. During the audit, no material financial findings or internal control weaknesses were reported. The auditor has issued an unmodified ("clean") opinion dated January 13, 2021 stating that the District's financial statements are fairly presented in conformity with Generally Accepted Accounting Principles (GAAP), as established by the Governmental Accounting Standards Board (GASB). The auditor prepares additional assurance letters and reports, in accordance with attestation standards established by the American Institute of Certified Public Accountants. The Memorandum of Internal Controls and Required Communications are attached (See Attachments 2 through 5).

The CAFR complies with the following requirements:

1. Board Policy BL-5.2 which requires the monitoring and reporting of financial conditions and activities to be performed annually by an external method.
2. State Law (Government Code Section 26909) which requires an annual examination and audit of the District's financial records.

Each year since 1997, the District has been awarded the prestigious Certificate of Achievement for Excellence in Reporting by the Government Finance Officers Association of the United States and

Canada (GFOA).

The Board Audit Committee discussed the CAFR at their meeting on January 13, 2021 and recommends that water inventory be recognized as an asset on the financial statements included in the Fiscal Year (FY) 20 CAFR.
Valley Water has not recognized water inventory as an asset in the past, and there is no legal or accounting rules board requirement to do so. A review of California Water Enterprise Special Districts shows that some agencies carry water inventory as an asset, and some do not.

Agencies that do include:

- Metropolitan Water District
- Easter Municipal water District
- Irvine Ranch Water District
- San Diego County Water Authority
- Santa Margarita Water District

Agencies that do not include:

- East Bay Municipal Utility District
- Contra Costa Water District
- Alameda County Water District
- Orange County Water District
- Marin Municipal Water District

As of June 30, 2020, Valley Water had 344,662 acre-feet (out of a 350,000 acre-feet allocation) in Semitropic groundwater reserves. Utilizing a three-year average rate of $331 acre-foot cost, the current valuation is approximately $114 million. In addition, there was 61,462 acre-feet in local reservoir storage as of June 30, 2020. The vast majority of the water stored in local reservoirs comes from local runoff, as opposed to purchased imported water. As a proxy, applying the same per acre-foot cost results in a current valuation of $20 million.

Groundwater in Santa Clara County is not owned by Valley Water, and therefore would not be inventoried, and other types of water inventory, such as water at treatment plants are relatively small, and therefore would be immaterial.

Per discussion with Valley Water's Bond Counsel and Financial Advisor, increasing assets on the balance sheet is likely to have minimal impact on Valley Water's credit ratings since Valley Water

debt is secured by current revenues, not assets on the balance sheet which may be more typical for corporations. Instead, Valley Water's financial strengths for credit rating purposes are heavily dependent upon its management experience, Board willingness to raise rates to generate current revenues for current expense, debt service coverage ratio (two times net revenues or better), strength of local economy, and cash reserve balances (days cash on hand to cover operating expense).

For transparency purposes, the Board Audit Committee recommends recognizing water inventory as an asset. As such, the attached FY 20 CAFR, which has been submitted to the Board for acceptance, includes water inventory as an asset.

FINANCIAL IMPACT:
Auditing services costs are included in the FY 2020-21 budget.

CEQA:
The recommended action does not constitute a project under CEQA because it does not have a potential for resulting in direct or reasonably foreseeable indirect physical change in the environment.

ATTACHMENTS:
*Attachment 1: FY 2019-20 CAFR
*Attachment 2: Memorandum of Internal Controls
*Attachment 3: Audit Report, Investment Policy Compliance
*Attachment 4: Audit Report, Article XIII-B Appropriations Procedure
*Attachment 5: Audit Report, Travel and Subsistence Policy Compliance

UNCLASSIFIED MANAGER:
Darin Taylor, 408-630-3068

THIS PAGE INTENTIONALLY LEFT BLANK

Santa Clara Valley Water District

now referred to as

Valley Water

San Jose, California

Comprehensive Annual Financial Report
For the Fiscal Year Ended June 30, 2020

Prepared by the General Accounting Services Unit

Darin Taylor, Chief Financial Officer
Gloria del Rosario, Accounting Manager

This page intentionally left blank

VALLEY WATER
COMPREHENSIVE ANNUAL FINANCIAL REPORT
For the Year Ended June 30, 2020

Table of Contents

Introductory Section

Letter of Transmittal 1
GFOA Certificate of Achievement..... 12
Organizational Chart 13
Board of Directors 14

Financial Section

Independent Auditor's Report..... 15
Management's Discussion and Analysis (Required Supplementary Information) 17

BASIC FINANCIAL STATEMENTS:
Government-wide Financial Statements:
Statement of Net Position 36
Statement of Activities 37
Fund Financial Statements:
Balance Sheet – Governmental Funds 38
Reconciliation of the Balance Sheet of Governmental Funds to the Statement of Net Position..... 40
Statement of Revenues, Expenditures and Changes in Fund Balances - Governmental Funds..... 42
Reconciliation of the Statement of Revenues, Expenditures and Change in Fund Balances of Governmental Funds to the Statement of Activities 44
Statement of Net Position – Proprietary Funds 45
Statement of Revenues, Expenses and Changes in Net Position - Proprietary Funds..... 46
Statement of Cash Flows - Proprietary Funds 47
Statement of Assets and Liabilities - Agency Fund 48

NOTES TO BASIC FINANCIAL STATEMENTS:

(1) Description of the Financial Reporting Entity 49
(2) Summary of Significant Accounting Policies 50
(3) Cash and Investments 59
(4) Reimbursement of Capital Costs 65
(5) Investment Income 66
(6) Capital Assets 67
(7) Short-Term and Long-Term Liabilities 69
(8) Property Taxes and Benefit Assessments 76
(9) Fund Balances 77
(10) Net Position 79
(11) Employees' Retirement Plan 80
(12) Other Post-Employment Benefits (OPEB) 86
(13) Risk Management 94
(14) Transfers In and Out 95
(15) Prior Period Adjustment 97
(16) Commitments 97
(17) Contingencies 99
(18) Subsequent Events 109

REQUIRED SUPPLEMENTARY INFORMATION

Schedule of Changes in Net Pension Liability and Related Ratios 112
Schedule of Employer Pension Contributions 113
Schedule of Changes in Net OPEB Liability and Related Ratios 114
Schedule of Employer Other Post Employment Benefit Contributions 115
Schedule of Revenues, Expenditures and Changes in Fund Balances
Budget and Actual - Budgeted Governmental Funds 116
Notes to Required Supplementary Information 118

SUPPLEMENTAL INFORMATION

Selected Watershed Activities Within the Watershed
and Stream Stewardship Fund
Schedule of Revenues, Expenditures and Changes in
Fund Balances 122
Schedule of Revenues, Expenditures and Changes in
Fund Balances – Budget and Actual 124

Water Enterprise and State Water Project Funds
Schedule of Revenues, Expenses and Changes in Net Position – Budget and Actual 128
Internal Service Funds
Combining Statement of Net Position 131
Combining Statement of Revenues, Expenses and Changes in Fund Net Position 132
Combining Statement of Cash Flows 133
Schedule of Revenues, Expenses and Changes in Fund Net Position - Budget and Actual 134
Agency Fund
Statement of Changes in Assets and Liabilities 138
Capital Assets Used in the Operation of Governmental Activities:
Schedule By Source 140
Schedule By Function and Activity 141
Schedule of Changes By Function and Activity 142

Statistical Section

Financial Trends
Net Position by Component 144
Changes in Net Position 146
Fund Balances of Governmental Funds 148
Changes in Fund Balances of Governmental Funds 150
Revenue Capacity
Water Revenue by Category 152
Principal Water Revenue Customers 153
Water Enterprise Rates Summary 154
Assessed and Estimated Actual Value of Taxable Property 156
Property Tax Rates - Direct and Overlapping Governments 157
Principal Property Tax Payers 158
Debt Capacity
Computation of District Act Debt Margin 159
Ratio of Outstanding Debt by Type 160
Revenue Bond Coverage 162
Computation of Direct and Overlapping Debt 164

Demographic and Economic Information
Demographic and Economic Statistics 165
Principal Employers 166
Operating Information
Full-time Equivalent District Employees by Function/Program 167
Operating Indicators by Function/Program 168
Capital Asset Statistics by Function/Program 169
Flood Control System Historical Operating Results 170

Valley Water

Clean Water • Healthy Environment • Flood Protection

January 13, 2021

TO THE BOARD OF DIRECTORS OF VALLEY WATER:

It is our pleasure to submit the Comprehensive Annual Financial Report (CAFR) for the Santa Clara Valley Water District, now referred to as Valley Water, for the fiscal year ended June 30, 2020. The Comprehensive Annual Financial Report is prepared in accordance with Generally Accepted Accounting Principles (GAAP) in the United States of America as promulgated by the Governmental Accounting Standards Board (GASB). Responsibility for both the accuracy of the data, and the completeness and fairness of the presentation, including all disclosures, rests with Valley Water. To the best of our knowledge and belief, the enclosed data are accurate in all material respects and are reported in a manner designed to present fairly the financial position and results of operations of the various activities of Valley Water. All disclosures necessary to enable the reader to gain an understanding of Valley Water's financial activities have been included.

To provide a reasonable basis for making these representations, management of Valley Water has established a comprehensive internal control framework that is designed both to protect Valley Water's assets from loss, theft, or misuse and to compile sufficient, reliable information for the preparation of Valley Water's financial statements in conformity with GAAP. Because the cost of internal controls should not outweigh their benefits, Valley Water's comprehensive framework of internal controls has been designed to provide reasonable rather than absolute assurance that the financial statements will be free from material misstatement. As management, we assert that, to the best of our knowledge and belief, this financial report is complete and reliable in all material respects.

Valley Water's financial statements have been audited by Maze and Associates, a firm of licensed certified public accountants. The purpose of the independent audit was to provide reasonable assurance that the financial statements of Valley Water for the fiscal year ended June 30, 2020, are free of material misstatement. The independent audit involved examining, on a test basis, evidence supporting the amounts and disclosures in the financial statements; assessing the accounting principles used and significant estimates made by management; and evaluating the overall financial statement presentation. The audit included obtaining an understanding of the entity and its environment, including internal control, sufficient to assess the risks of material misstatement of the financial statements and to design the nature, timing, and extent of further audit procedures.

The independent auditor concluded, based upon the audit, that there was a reasonable basis for rendering an unmodified opinion on Valley Water's financial statements for the fiscal year ended June 30, 2020. The opinion rendered concluded that the financial statements are fairly presented, in all material respects, in conformity with GAAP. The independent auditor's report is presented as the first component of the financial section of this report.

The independent audit of the financial statements of Valley Water is part of a broader, federally mandated "Single Audit" designed to meet the special needs of federal grantor agencies. The standards governing Single Audit engagements require the independent auditor to report not only on the fair presentation of the financial statements but also on Valley Water's internal controls and

compliance over the administration of federal awards. The single audit review is applicable when Federal funded expenditures exceed $0.8 million and is typically completed after the audit of the financial statements and will be issued separately for the Board's acceptance.

GAAP requires that management provide a narrative introduction, overview, and analysis to accompany the basic financial statements in the form of Management's Discussion and Analysis (MD&A). This letter of transmittal is designed to complement the MD&A and should be read in conjunction with it. Valley Water's MD&A can be found immediately following the report of the independent auditor.

District Profile

The mission of Valley Water is to provide Silicon Valley safe, clean water for a healthy life, environment, and economy.

Valley Water operates as a State of California special district under the authority of the District Act (Wat. Code, § Ch. 60, Refs & Annos). Valley Water is the primary water resources agency for Santa Clara County, California. It is the largest multi-purpose water supply, watershed stewardship, and flood management special district in California. It acts not only as the County's primary water wholesaler but also as its flood protection agency and is the steward for its streams and creeks, underground aquifers, and district-built reservoirs. The District Act governs the structure, function, and operations of the Valley Water's Board of Directors (Board), which governs Valley Water and directs the Chief Executive Officer.

Valley Water is the primary water resources agency for the two million residents of the County. It encompasses all of the county's approximately 1,300 square miles and serves the area's 15 cities and towns: Campbell, Cupertino, Gilroy, Los Altos, Los Altos Hills, Los Gatos, Milpitas, Monte Sereno, Morgan Hill, Mountain View, Palo Alto, San Jose, Santa Clara, Saratoga, and Sunnyvale. Valley Water also serves certain unincorporated areas of the County.

Valley Water sells treated water to 8 water retail companies, cities, and towns that service communities within the County via their own distribution systems. There are also private well owners in the County, for which Valley Water levies a groundwater production charge for water pumped. This water demand requires Valley Water to operate and maintain a complex delivery and treatment system that includes 3 water treatment plants, an advanced water purification center, 10 local reservoirs and dams, a state-of-the-art water quality laboratory, dozens of groundwater recharge basins, 5 pump stations and 144 miles of pipelines. Water supplies include local surface water and groundwater, imported water, and recycled water. Water conservation is also an important part of the water supply mix since it offsets water demands.

To ensure an adequate and reliable supply of high-quality water, Valley Water has partnered with cities and water retailers in the county to develop recycled water supplies. About 5% of the County's total water use currently consists of recycled water, limited primarily to landscaping and industrial uses. Recycled water use is expected to expand in coming years.

In 2010, the Board approved agreements with the City of San Jose to partner and build a facility to produce about eight million gallons per day (MGD) of highly purified water. Valley Water and the City of San Jose entered into a ground lease and property use agreement (the "Ground Lease") with respect to the City of San Jose owned site on which the Silicon Valley Advanced Water Purification Center (SVAWPC) is located. In addition, Valley Water and the City of San Jose

entered into an integration agreement (the "Integration Agreement") with respect to the operation of the SVAWPC. Valley Water and the City of San Jose each have the annual option to terminate the Integration Agreement on or after June 30, 2020, in accordance with its terms. The Ground Lease provides that if the Integration Agreement is terminated, the Ground Lease will simultaneously terminate and upon such termination, Valley Water would be required to surrender the facilities of the SVAWPC to the City of San Jose. The option to terminate the Integration Agreement provides an opportunity for the City of San Jose and Valley Water to re-evaluate the continued need for integrated management of their respective facilities (i.e., Valley Water's SVAWPC and City of San Jose's Regional Wastewater Facility), financial support, and opportunities for the use of recycled water. Both parties would be required to meet and discuss potentially amending the Integration Agreement in lieu of terminating the Integration Agreement to address the parties' concerns.

The SVAWPC in North San Jose commenced full operation in March 2014. Currently, purified water produced by the Silicon Valley Advanced Water Purification Center is not used for potable (drinking) purposes and is instead blended with existing recycled water to enhance its quality for non-potable purposes such as irrigation, cooling towers and industrial applications.

In December 2019, Valley Water's Board of Directors approved a 76-year agreement with the cities of Palo Alto and Mountain View to secure a minimum of 9 MGD of wastewater effluent through an effluent transfer option. Under the agreement, Valley Water will pay $0.2 million per year for the option to receive the wastewater effluent until June 1, 2033 or the point in time when Valley Water begins to receive the wastewater effluent, whichever occurs first. If Valley Water exercises its option, 9 MGD of effluent would be delivered to a regional purification facility to be constructed and owned by Valley Water. The purified water, which would be a locally controlled drought resilient supply, could be used for either indirect potable reuse (e.g. recharge local groundwater basins) or direct potable reuse (raw water or treated water augmentation, subject to future regulatory requirements). If Valley Water exercises the option, Valley Water would pay $1.0 million per year for the effluent plus an inflation escalator for the 76-year term of the agreement. Valley Water has not made a decision as to whether it will exercise the option to receive wastewater effluent under the agreement. In addition to the foregoing option, Valley Water will contribute $16.0 million to be used to fund either: (1) a portion of the costs of a local salt removal facility in the City of Palo Alto to provide a higher quality of recycled water for irrigation and cooling towers or (2) in the event that the cities of Palo Alto and Mountain View decide not to construct the local plant within 13 years of the effective date of the agreement, to fund other recycled water or water supply projects.

In June 2020, the Board reaffirmed its intention to engage in a public-private-partnership (P3) project delivery method for the Expedited Purified Water Program through a request for qualification process. Valley Water staff plans on updating the project scope, timing, and procurement process for the project and qualification of a potential P3 partner in Fiscal Year 2021.

As the primary wholesale water supplier in the County, Valley Water is dedicated to assuring a reliable supply of healthy and clean drinking water. Valley Water provides stream stewardship that encompasses managing flood and storm waters within the County and protecting watersheds and riparian corridors, thereby providing for public safety, and the protection of property and the natural environment along creeks and rivers, and at the edge of the San Francisco Bay.

Factors Affecting Financial Condition

Local Economy

Located south of San Francisco Bay, Santa Clara County is the sixth largest county in California, with a population of 1.78 million and measures approximately 1,315 square miles.

The COVID-19 pandemic has created a public health crisis that is affecting the Valley Water community and economy in ways that have not been previously experienced. Several industries including the airline, restaurant, and tourism industries were deeply affected by shelter in place mandates and ten months into the COVID-19 crisis, economies across the U.S. are recovering jobs in some areas, while continuing to see losses in others. In Santa Clara County, the unemployment rate of 7% remains one of the lowest in the Bay Area.[1] In comparison, California's unemployment rate is currently 11%. While the U.S. economy has been hit hard during the coronavirus pandemic, the technology industry and its hub in Santa Clara County continue to fare better than other large regions across California and the nation.[2]

Pre-COVID, Silicon Valley's regional GDP continued to grow, with estimated gains of nearly 5% year-over-year. Since 2001, the number of patents registered to Silicon Valley inventors each year more than doubled and venture capital investments flowing into the region's companies have been high over the past two years. While job growth in Silicon Valley slowed over the past two years, the pace remains higher than the state or nation as a whole. However, more people are leaving the region than coming in, with a marked outflow to the greater Bay Area, other parts of the state, Washington, Texas, Arizona, and Nevada.

The County has one of the highest personal income levels in the Bay Area and in California, and the workforce is highly educated. Businesses located in Santa Clara County are able to take advantage of the highly educated and skilled workforce in the fields of science and engineering, its high rate of venture capital investment, and dynamic culture of cutting-edge innovation. The region is also emerging as a worldwide leader in the clean technology industry, and Santa Clara County accounts for 34% of total clean technology investment in the state and 15% in the country.[3] Other major industry clusters include life sciences and financial and professional services.

The total amount of new commercial space completed in the region hit an 18-year high in 2019, bolstered by significant industrial space development, plus new office and R&D space. In addition to booming commercial space completions, the amount under construction reached a 19-year high in 2019. Among other projects, large Silicon Valley tech companies with office space under construction at the end of 2019 included Google, Microsoft, Adobe, and NVIDIA.

The County and its Cities are working aggressively to create affordable housing to meet the needs of residents. New home construction is recovering from the lows of the 2007-2009 recession. Home prices in the region declined slightly in 2019, yet housing costs remain the highest in the nation (with median home sale prices remaining well above $1.0 million).[4] Pre-COVID, per capita income and average wages continued their upward trend, and Silicon's Valley's poverty rate was still low compared to the rest of the country.

---

[1] State of CA Employment Development Department, September 2020 for Santa Clara County
[2] MarketWatch, June 2020
[3] Santa Clara County website, Economic Resource Guide
[4] 2020 Silicon Valley Index – Joint Venture Silicon Valley Network

In light of COVID-19, Valley Water has been refining project plans, prioritizing business continuity, and maintaining the operation of essential services to provide safe, clean water to Santa Clara County. The COVID-19 outbreak is currently ongoing, and the ultimate geographic spread of the virus, the duration and severity of the outbreak, and the economic impact are uncertain. To date, Valley Water has not been notified by any retail water purveyor served by Valley Water of material delinquencies in the payment of water utility bills by customers of such retail water purveyors, despite Governor Newsom's executive order issued on March 4, 2020 that restricts water shutoffs to homes and small businesses while the state responds to the COVID-10 pandemic.

Valley Water began calendar year 2020 with groundwater storage well within the Normal range of its Water Shortage Contingency Plan. Despite well below-normal local rainfall and statewide snowpack, end of year groundwater for 2020 is projected to be well within the Normal range. The State has placed operating restrictions on five of Valley Water's ten dams due to Seismic safety concerns. In addition, on February 20, 2020, the Federal Energy Regulatory Commission ordered the drawdown of Anderson reservoir effective October 1, 2020.[5] As such, the restricted capacity is now at 62,362 acre-feet relative to 166,140 acre-feet total storage capacity. As of June 30, 2020, total local reservoir storage was 61,462 acre-feet. The estimated cost to fix all dams with seismic safety concerns is approximately $836.0 million according to the FY 21-25 Capital Improvement Program.

Valley Water's Semitropic groundwater bank reserves were at 98%, or 344,662 acre-feet for the same time period.[6] Semitropic Water Storage District has reported elevated concentrations of 1,2,3 Trichloropropane in some of its groundwater wells. There is currently insufficient information to conclude whether these detections could impact banking operations. Impacts could potentially include higher pumping, recovery, and treatment costs and possibly impaired recovery of banked water supplies.

To improve transparency, beginning with the fiscal year ended June 30, 2020, water stored in Valley Water's reservoirs, as well as the Semitropic groundwater storage bank is recorded as inventory in the financial statements.

The Valley Water Board of Directors continues its call for a 20% reduction and a limit of three days per week for irrigation of ornamental landscape with potable water. From the beginning of the drought response initiated in 2014, Valley Water has worked with water retailers, cities, and the County to maintain water conservation efforts and public outreach, and to implement other actions to reduce water use. Through these efforts, Valley Water has achieved a 17% reduction in water use through June 2020 compared to 2013. [6]

Long-term Financial Planning

Valley Water plans, manages, and carries out work to meet policies established by its Board of Directors. Under Valley Water's form of Policy Governance, these "Ends" policies describe the mission, outcomes, or results to be achieved by Valley Water staff. Balancing the Ends policies are Executive Limitations, which set limits on staff activities in fulfilling the Ends. Alignment of plans and resources with the Ends policies helps the Board fulfill the critical responsibility of defining, balancing, and prioritizing "what benefits, for what people, at what cost," and enhances Valley Water staff's accountability in using budgeted resources to accomplish those ends.

[5] Valley Water – Water Tracker, October 2020
[6] Valley Water – Water Tracker, August 2020

Valley Water funds activities that carry out its mission through the following three highest-level policies.[7]

- E2 - Reliable, clean water supply for current and future generations
- E3 - Healthy and safe environment for residents, businesses, and visitors, as well as for future generations
- E4 - Water resources stewardship to protect and enhance watersheds and natural resources and to improve the quality of life in Santa Clara County

Valley Water's largest revenue source is water charges, acting as a wholesaler for numerous water supply retailers in Santa Clara County. Water revenues for fiscal year 2020 were $266.9 million. In May 2020, to mitigate the impact of the COVID-19 pandemic on the communities within Valley Water's service area, the Board of Directors did not adopt any increase to water rates for fiscal year 2021. However, the Board asked staff to bring back information on the financial impacts of the pandemic on the community and on Valley Water in order to determine whether a mid-year rate increase should be pursued. On September 22, 2020, the Board decided to not pursue a mid-year rate increase for fiscal year 2021. The financial impact of no increase in water rates for fiscal year 2021 will be the need for higher water rate increases in future years in the absence of offsetting cost cutting (or reduction in CIP spending) actions.

The Five-Year Capital Improvement Plan (CIP) includes a total of 67 capital projects with an estimated cost of over $6.5 billion. Valley Water has been and continues to be successful in leveraging funding for its capital projects through partnerships with federal, state, and local agencies. Of the $6.5 billion total funding, $1.2 billion is expected from Valley Water's various partners, such as the U.S. Army Corps of Engineers (USACE), and $5.3 billion from Valley Water. Of the $1.2 billion that is expected from Valley Water's partners, $742.0 million is advanced by Valley Water and reimbursed later. This $742.0 million is included in the CIP and increases Valley Water's total funding requirement from $5.3 billion to $6.0 billion to ensure that Valley Water has adequate funding to advance the reimbursement.[8] Obtaining timely permits from regulatory agencies continues to be a challenge in the effort to carry out the CIP.

In November 2012, the voters approved the Safe, Clean Water and Natural Flood Protection (Safe, Clean Water) special parcel tax to fund projects addressing the following community priorities:

- Ensuring safe reliable water for the future;
- Reducing toxins, hazards, and contaminants in our waterways;
- Protecting water supply and local dams from the impacts of earthquakes and natural disasters;
- Restoring fish, bird, and wildlife habitat;
- Providing flood protection to homes, businesses, schools, streets, and highways.

[7] Valley Water FY2019-20 Operating and Capital Budget
[8] Valley Water – FY2021-25 Capital Improvement Program

Safe, Clean Water builds on the success of the Clean, Safe Creeks and Natural Flood Protection (Clean, Safe Creeks) plan approved by the voters in 2000. Safe, Clean Water replaced the Clean, Safe Creeks measure in its entirety beginning July 1, 2013. The program is funded by a combination of revenues from the continuation of an annual special tax, reserves from unspent funds of the Clean, Safe Creeks plan, and state and federal funding. For fiscal year 2021, the budget includes $45.5 million of tax revenue for this program (see Note 17 - Subsequent Events for additional information on the recent ballot measure).

Relevant Financial Policies

End of Year Balances

Valley Water policies for end-of-year balance re-appropriations are as follows:

- Any remaining appropriation balances at the end of the fiscal year for capital projects are annually re-appropriated for continued use in those same projects in the following fiscal year. These amounts shall be consistent with the planned expenditure schedule identified in the 5-year CIP;

- Any variances at the end of the current fiscal year in Operating and Capital Reserves from those estimated in the budget not otherwise re-appropriated above shall result in corresponding adjustments to the estimated reserve appropriations in accordance with the Valley Water Reserve policy.

Valley Water, through the Public Facilities Financing Corporation, also maintains a commercial paper program for funding capital projects. Commercial paper is used to provide low-cost interim financing during construction. Valley Water issues long-term debt obligations to repay principal outstanding on the commercial paper over a 30-year term.

Budgetary Controls

Valley Water maintains budgetary controls, the objectives of which are to ensure compliance with legal provisions, embodied in the annually appropriated budget approved by the Board. Activities of the governmental funds and proprietary funds are included in the annual appropriated budget. Additionally, as a management tool, project-length financial plans are included in the annual Capital Improvement Plan. The legal level of budgetary control (that is, the level at which expenditures cannot legally exceed the appropriated amount) is established at the fund level, further limited by two categories - the operating budget (consisting of total operations, operating projects, and debt service) and the capital budget (consisting of capital project expenditures). Valley Water also maintains an encumbrance accounting system as one process to accomplishing budgetary control. Budget adjustments that increase or decrease revenue projections, appropriations or reserves of any fund require Board approval. Budget and actual comparisons are provided in this report for each fund for which an appropriated annual budget has been adopted. For governmental funds, this comparison is presented starting on pages 116 as part of required supplementary information and selected watershed activities starting on pages 124 as part of supplemental information. For proprietary funds, this comparison is presented starting on pages 128 and 134 as part of the combining and individual fund statements and schedules.

The guidelines used by Valley Water in developing this formal budget process are those recommended by the National Advisory Council on State and Local Budgeting, and the Government Finance Officers Association (GFOA).

Reserve Requirements

Valley Water's financial policies establish the levels at which reserves shall be maintained. Valley Water reserve policies address the need for both operating and capital reserves, and funding of contingency and future liabilities.

Major Initiatives

Highlights of activities and accomplishments for the fiscal year ended June 30, 2020 include the following: [9]

- In July 2019, the Department of Water Resources (DWR) approved Valley Water's Groundwater Management Plan as an Alternative to a Groundwater Sustainability Plan, confirming it satisfies the objectives of the Sustainable Groundwater Management Act (SGMA). DWR evaluated 15 submitted alternatives in total. The two large basis in Santa Clara County, the Santa Clara and the Llagas Subbasins, are now among the nine basins in the state of California with approved SGMA Alternative Plans. DWR approval of Valley Water's Alternative is a testament to the organization's comprehensive groundwater management and ongoing commitment to groundwater sustainability.

- On August 28, 2019, Valley Water hosted a groundbreaking ceremony for the upper Llagas Creek Flood Protection Project (Phase 1) in Morgan Hill. Phase 1 construction has an anticipated completion day in May 2022. The entire project consists of approximately 13.9 miles of flood protection improvements, and continues a Clean, Safe Creeks project in partnership with the U.S. Army Corps of Engineers.

- On September 21, 2019, Valley Water, in partnership with the Creek Connections Action Group (CCAG), coordinated a milestone 35th Annual Coastal Cleanup Day event in Santa Clara County. Approximately 53,297 pounds of trash was removed by 2,166 volunteers.

- On September 19, 2019, Valley Water hosted a community appreciation event at the Coyote Pumping Plant which marked the completion of major construction activities for the Main Avenue and Madrone Pipeline Restoration Project. This project installed approximately 2.6 miles of 24-inch to 36-inch diameter raw water pipelines, which are now capable of functioning at full operational capacity and conveying local and imported rate water from Anderson Reservoir and the Santa Clara Conduit to the Main Avenue Recharge Ponds and the Madrone Channel.

[9] Valley Water CEO Bulletins

- On November 20, 2019, Valley Water hosted a ribbon cutting ceremony to mark the completion of the Cunningham Flood Detention Certification project in San Jose. Lake Cunningham Regional Park serves as a detention area by storing water within the park during a storm to help prevent flooding downstream of the park. These improvements, in combination with the completed Lower Silver Creek Flood Protection Project improvements, will protect approximately 3,800 properties from a 100-year flood event.

- On December 10, 2019, Valley Water's Board of Directors approved a 76-year agreement with the cities of Palo Alto and Mountain View to secure a minimum of 9 MGD of wastewater effluent through an effluent transfer option. Under the agreement, described in detail earlier, Valley Water could obtain the source effluent for a regional purification facility to be constructed and owned by Valley Water, which would be a locally controlled drought resilient supply.

- On January 15, 2020, Valley Water joined local, regional, state, and federal agencies to unveil the first permanent X-Band radar in the San Francisco Bay called the Advanced Quantitative Precipitation Information (AQPI) System at a ribbon cutting event at the Penitencia Water Treatment Plant. The system will provide data for forecasting, which will assist water managers, reservoir operators, wastewater plant managers, flood, and emergency responders to make operational and safety decisions during extreme weather events.

- On February 29, 2020, Valley Water joined the City of Mountain View, Mountain View California Little League and the neighboring community for a ribbon cutting event to celebrate the completion of McKelvey Park. Valley Water's Permanente Creek Flood Protection Project reached a major milestone with the completion of the McKelvey Park flood detention basin in Mountain View. McKelvey Park was built as a dual-purpose facility, providing flood protection to downstream neighborhoods and a recreational space for residents.

- On June 3, 2020, Valley Water hosted a virtual graduation ceremony honoring the 2020 Water 101 Academy graduates. Designed to engage community leaders to become Water Ambassadors, the Water 101 Academy provided a series of sessions and networking opportunities for participants to understand local water challenges and learn about the mission and goals of Valley Water so that they could serve as advocates for their respective communities. Valley Water's commitment to engage and inform communities of current and future Valley Water projects, was reinforced at the ceremony,

Awards and Acknowledgements

The Government Finance Officers Association of the United States and Canada (GFOA) awarded a Certificate of Achievement for Excellence in Financial Reporting to Valley Water for its comprehensive annual financial report for the fiscal year ended June 30, 2019. This was the 23rd consecutive year that Valley Water has received this prestigious award. To be awarded a Certificate of Achievement, Valley Water must publish an easily readable and efficiently organized

comprehensive annual financial report. This report must satisfy both generally accepted accounting principles and applicable legal requirements.

A Certificate of Achievement is valid for a period of one year only. We believe that our current comprehensive annual financial report continues to meet the Certificate of Achievement Program's requirements and we are submitting it to the GFOA to determine its eligibility for another certificate.

The preparation of this CAFR represents the culmination of months of concerted team effort by diverse Valley Water staff, including team members from Financial Planning and Management Services Division, Water Supply Division, Information Management Services Division, General Services Division, Human Resources Division, and Office of the District Counsel. Many team members demonstrated a high degree of personal dedication and determination in producing this exemplary document. In addition, special thanks to Valley Water staff in all groups for responding so positively to the requests for detailed information that accompanies each annual audit. The role of Maze and Associates is also acknowledged for their significant technical contribution and assistance.

Special thanks go to Gloria del Rosario, General Accounting Unit Manager; the following Accounting staff: Jaime Salandanan, Guy Canha, Fanny Chan, Leticia Rocha, Trisha Cheung, Christine Hernandez, Ofelia Hsieh, and Gloria Chou; and Chenlei Yao of the Budget and Financial Planning Unit, for their talent and dedication in preparing this financial report.

Finally, we wish to express our sincere appreciation to Valley Water's Board of Directors and management for providing policy direction and a firm foundation of support for the pursuit of excellence in all realms of professional endeavors.

Darin Taylor
Chief Financial Officer

Rick Callender
Chief Executive Officer

This page intentionally left blank

Government Finance Officers Association

Certificate of Achievement for Excellence in Financial Reporting

Presented to

Santa Clara Valley Water District
California

For its Comprehensive Annual
Financial Report
For the Fiscal Year Ended

June 30, 2019

Christopher P. Morrill

Executive Director/CEO

VALLEY WATER
Board of Directors
& Executive Management

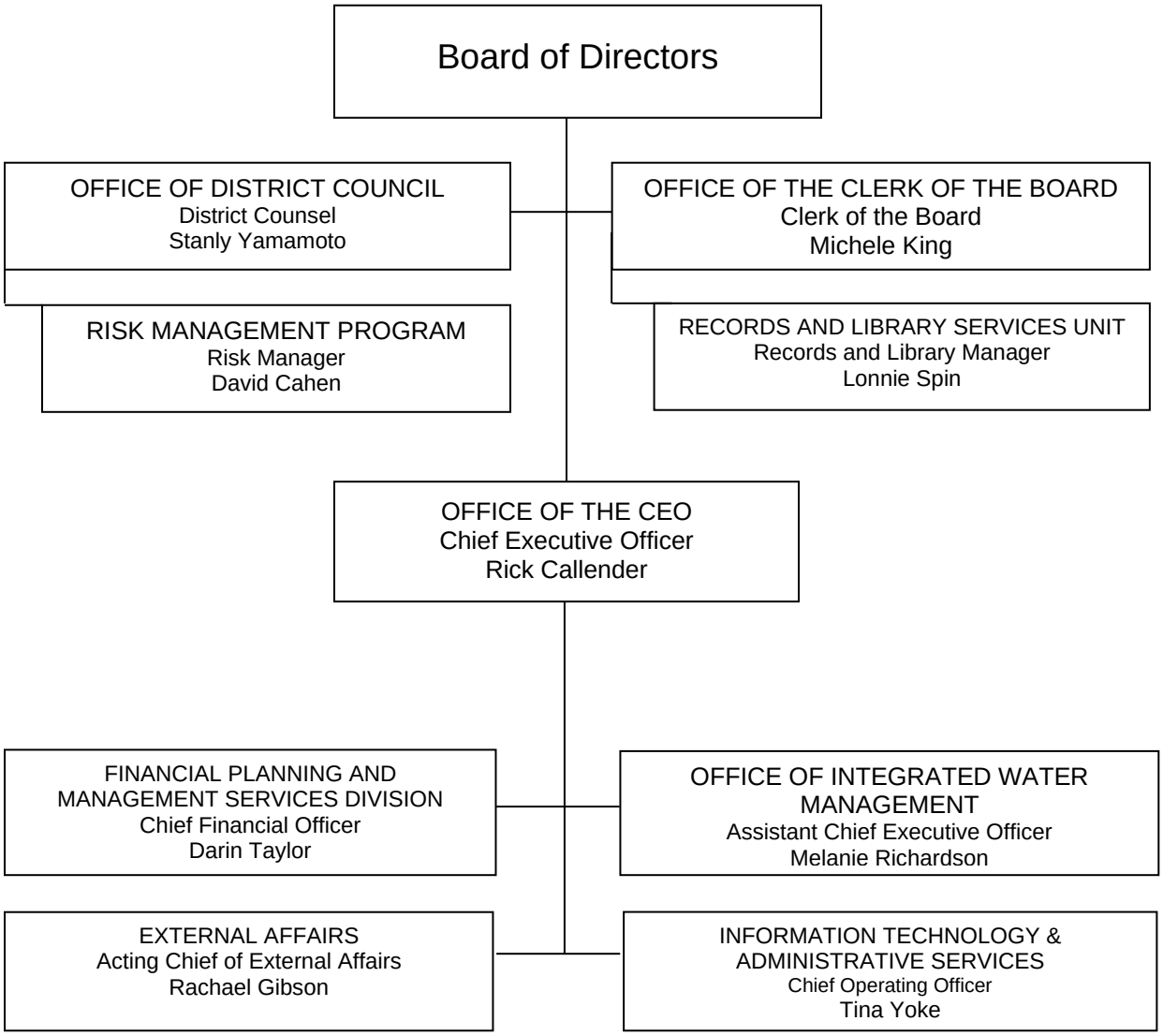

VALLEY WATER
2019 – 2020
BOARD OF DIRECTORS

John L. Varela
District 1

Barbara Keegan
District 2

Richard P. Santos
District 3

Linda J. LeZotte
District 4

Nai Hsueh
District 5

Tony Estremera
District 6

Gary Kremen
District 7

MAZE & ASSOCIATES

INDEPENDENT AUDITORS' REPORT

Board of Directors
Santa Clara Valley Water District
San Jose, California

Report on the Financial Statements

We have audited the accompanying financial statements of the governmental activities, the business-type activities, each major fund, and the aggregate remaining fund information of the Santa Clara Valley Water District (District), as of and for the year ended June 30, 2020, and the related notes to the financial statements, which collectively comprise the District's basic financial statements as listed in the Table of Contents.

Management's Responsibility for the Financial Statements

Management is responsible for the preparation and fair presentation of these financial statements in accordance with accounting principles generally accepted in the United States of America; this includes the design, implementation, and maintenance of internal control relevant to the preparation and fair presentation of the financial statements that are free from material misstatement, whether due to fraud or error.

Auditor's Responsibility

Our responsibility is to express opinions on these financial statements based on our audit. We conducted our audit in accordance with auditing standards generally accepted in the United States of America and the standards applicable to financial audits contained in *Government Auditing Standards*, issued by the Comptroller General of the United States. Those standards require that we plan and perform the audit to obtain reasonable assurance about whether the financial statements are free from material misstatement.

An audit involves performing procedures to obtain audit evidence about the amounts and disclosures in the financial statements. The procedures selected depend on the auditor's judgment, including the assessment of the risks of material misstatement of the financial statements, whether due to fraud or error. In making those risk assessments, the auditor considers internal control relevant to the District's preparation and fair presentation of the financial statements in order to design audit procedures that are appropriate in the circumstances, but not for the purpose of expressing an opinion on the effectiveness of the District's internal control. Accordingly, we express no such opinion. An audit also includes evaluating the appropriateness of accounting policies used and the reasonableness of significant accounting estimates made by management, as well as evaluating the overall presentation of the financial statements.

We believe that the audit evidence we have obtained is sufficient and appropriate to provide a basis for our audit opinions.

Opinions

In our opinion, the financial statements referred to above present fairly, in all material respects, the respective financial position of the governmental activities, the business-type activities, each major fund, and the aggregate remaining fund information of the District as of June 30, 2020, and the respective changes in financial position and, where applicable, cash flows thereof for the year then ended in accordance with accounting principles generally accepted in the United States of America.

Accountancy Corporation
3478 Buskirk Avenue, Suite 215
Pleasant Hill, CA 94523

T 925.930.0902
F 925.930.0135
E maze@mazeassociates.com
W mazeassociates.com

Emphasis of Matter
As discussed in Note 15, the District restated the net position of the Water Enterprise Fund related to the accounting for water inventory. The emphasis of this matter does not constitute a modification to our opinions.

Other Matters
Required Supplementary Information
Accounting principles generally accepted in the United States of America require that Management's Discussion and Analysis and other Required Supplementary Information as listed in the Table of Contents be presented to supplement the basic financial statements. Such information, although not a part of the basic financial statements, is required by the Governmental Accounting Standards Board, who considers it to be an essential part of financial reporting for placing the basic financial statements in an appropriate operational, economic or historical context. We have applied certain limited procedures to the required supplementary information in accordance with auditing standards generally accepted in the United States of America, which consisted of inquiries of management about the methods of preparing the information and comparing the information for consistency with management's responses to our inquiries, the basic financial statements, and other knowledge we obtained during our audit of the basic financial statements. We do not express an opinion or provide any assurance on the information because the limited procedures do not provide us with sufficient evidence to express an opinion or provide any assurance.

Other Information
Our audit was conducted for the purpose of forming opinions on the financial statements that collectively comprise the District's basic financial statements as a whole. The Introductory Section, Supplemental Information, and Statistical Section as listed in the Table of Contents are presented for purposes of additional analysis and are not required parts of the basic financial statements.

The Supplemental Information is the responsibility of management and was derived from and relates directly to the underlying accounting and other records used to prepare the basic financial statements. The information has been subjected to the auditing procedures applied in the audit of the basic financial statements and certain additional procedures, including comparing and reconciling such information directly to the underlying accounting and other records used to prepare the basic financial statements or to the basic financial statements themselves, and other additional procedures in accordance with auditing standards generally accepted in the United States of America. In our opinion, the Supplemental Information is fairly stated, in all material respects, in relation to the basic financial statements as a whole.

The Introductory and Statistical Sections have not been subjected to the auditing procedures applied in the audit of the basic financial statements and, accordingly, we do not express an opinion or provide any assurance on them.

Other Reporting Required by Government Auditing Standards
In accordance with *Government Auditing Standards*, we have also issued our report dated January 13, 2021, on our consideration of the District's internal control over financial reporting and on our tests of its compliance with certain provisions of laws, regulations, contracts, and grant agreements and other matters. The purpose of that report is to describe the scope of our testing of internal control over financial reporting and compliance and the results of that testing, and not to provide an opinion on internal control over financial reporting or on compliance. That report is an integral part of an audit performed in accordance with *Government Auditing Standards* in considering the District's internal control over financial reporting and compliance.

Maze + Associates

Pleasant Hill, California
January 13, 2021

Management's Discussion and Analysis

Our discussion and analysis of Valley Water's financial performance provides an overview of Valley Water's financial activities for the fiscal year ended June 30, 2020. This information is presented in conjunction with the audited financial statements that follow this section.

Financial Highlights

- The net position of Valley Water was $2.7 billion as of June 30, 2020. Of this amount, $163.8 million (unrestricted, but committed and assigned net position) may be used to meet Valley Water's ongoing obligations to citizens, businesses, stakeholders and creditors.
- Valley Water's net position increased by $283.6 million during the current fiscal year. The net position of the governmental activities increased by $62.2 million and the net position of the business-type activities by $221.4 million, which includes $134.4 million in water inventory due to the Board of Directors' decision to start recording water as inventory beginning in fiscal year 2020.
- As of the close of the current fiscal year, Valley Water's governmental funds reported combined ending fund balances of $350.1 million, an increase of $6.8 million in comparison with the prior fiscal year fund balances of $343.3 million.
- The fund balance for the general fund was $14.2 million, largely unchanged from the prior fiscal year. Committed and assigned fund balances were $14.2 million or 100% of the total fund balance.
- The fund balances of the Watershed & Stream Stewardship and Safe, Clean Water & Natural Flood Protection funds were $330.5 million, an increase of $8.7 million from the prior fiscal year.

OVERVIEW OF THE COMPREHENSIVE ANNUAL FINANCIAL REPORT (CAFR)

The CAFR is presented in six sections:

- An introductory section that includes the Transmittal and general information
- Management's Discussion and Analysis
- The Basic Financial Statements that include the Government-wide and Fund Financial Statements, along with the Notes to statements
- Required and Other Supplementary information
- Statistical Information

Basic Financial Statements

The Basic Financial Statements contain the Government-wide Financial Statements, the Fund Financial Statements, and the Notes to the financial statements. The financial statements presented herein include all the activities of Valley Water and its component units using the integrated approach as prescribed by Generally Accepted Accounting Principles (GAAP). This report also includes supplementary information intended to furnish additional detail to support the Basic Financial Statements.

Government-wide Financial Statements

The government-wide financial statements present the financial picture of Valley Water from an economic resources' measurement focus using the accrual basis of accounting.

They include the Statement of Net Position and the Statement of Activities:

The Statement of Net Position. The Statement of Net Position presents information on all Valley Water's assets, deferred outflow, liabilities, and deferred inflow, with the difference between them reported as net position. Over time, increases or decreases in net position may serve as a useful indicator of whether the financial position of Valley Water is improving or deteriorating.

The Statement of Activities. The Statement of Activities presents information showing how Valley Water's net position changed during the most recent fiscal year. All changes in net position are reported as soon as the underlying event giving rise to the change occurs, regardless of the timing of related cash flows. Thus, revenues earned, and expenses incurred are reported in this statement even if the resulting cash flows will occur in future fiscal periods (e.g., earned but uncollected taxes and earned but unused vacation leave).

The amounts in the Statement of Net Position and the Statement of Activities are separated into Governmental and Business-type activities.

Governmental activities are principally supported by taxes and intergovernmental revenues and include general government, watershed management, and construction and debt service funding.

Business-type activities are those that are intended to recover all of a significant portion of their costs through user fees and charges and include the water utility operation fund.

The government-wide financial statements include not only Valley Water itself (known as the primary government), but also a legally separate Santa Clara Valley Water District Public Facilities Financing Corporation (the Corporation) for which Valley Water is financially accountable. Financial information for this blended component unit is reported as if it were part of the primary government because its sole purpose is to provide financing to Valley Water under the debt issuance documents of Valley Water. Additional information on this legally separate entity can be found in Note 1(b) in the notes to basic financial statements.

The Government-wide Financial Statement can be found on pages 36 and 37 of this report.

Fund financial statements

A fund is a grouping of related accounts that is used to maintain control over resources that have been segregated for specific activities or objectives. Valley Water, like other special districts, uses fund accounting to ensure and demonstrate compliance with

finance-related legal requirements. The funds of Valley Water are segregated into three categories: governmental funds, proprietary funds, and fiduciary funds.

Governmental funds. Valley Water's basic services are reported in governmental funds, which focus on how money flows into and out of those funds and the balances left at year-end that are available for spending. These funds are reported using the modified accrual basis of accounting, which measures cash and other financial assets that can readily be converted to cash. The governmental fund statements provide a detailed short-term view of Valley Water's general government operations and the basic services it provides. Governmental fund information helps determine whether there are more or fewer financial resources that can be spent in the near future to finance Valley Water's projects.

Governmental funds are used to account for essentially the same functions reported as *governmental activities* in the government-wide financial statements. However, unlike the government-wide financial statements, governmental fund statements focus on *near-term inflows and outflows of spendable resources*, as well as on *balances of spendable resources* available at the end of the fiscal year. A reconciliation of both the governmental funds balance sheet and the governmental funds statement of revenues, expenditures, and change in fund balances to the government-wide statements are provided to facilitate this comparison between *governmental funds* and *governmental activities.*

Proprietary funds. Valley Water maintains two-different types of proprietary funds: enterprise funds and internal service funds.

Proprietary funds are reported using the accrual basis of accounting. Enterprise funds are used to report the same functions presented as business-type activities in the government-wide financial statements but provide more detail and additional information. Valley Water uses enterprise funds to account for its water utility operations fund.

Internal service funds are used to accumulate and allocate costs internally among the Valley Water's various functions. Valley Water uses internal service funds to account for its fleet of vehicles and computer equipment, risk management, and information technology activities. The internal service funds have been included within governmental activities and business-type in the government-wide financial statements.

Fiduciary funds. Fiduciary funds are used to account for resources held for the benefit of parties outside Valley Water. Fiduciary funds are not reflected in the government-wide financial statements because the resources of those funds are not available to support Valley Water's own programs.

Notes to Basic Financial Statements

The notes provide additional information that is essential to a full understanding of the data provided in the government-wide and fund financial statements. The notes to basic financial statements can be found starting on page 49 of this report.

Other Information

The required supplementary information related to Valley Water's pension and OPEB plans is included after the Notes to the Financial Statements and can be found starting on page 112 of this report.

GOVERNMENT-WIDE FINANCIAL ANALYSIS

The balance in net position over a period of time is a useful indicator of a government's financial position. In the case of Valley Water, assets and deferred outflows exceeded liabilities and deferred inflows by $2,703.9 million at the end of the current fiscal year.

Valley Water
Condensed Statement of Net Position
(in Millions)

	Governmental Activities		Business-type Activities		Total	
	2020	2019	2020	2019	2020	2019
Cash and investments	$ 427.8	$ 406.6	$ 288.2	$ 263.8	$ 716.0	$ 670.4
Other assets	15.2	29.1	179.3	40.1	194.5	69.2
Capital assets	1,553.8	1,504.6	1,266.3	1,163.9	2,820.1	2,668.5
Total assets	1,996.8	1,940.3	1,733.8	1,467.8	3,730.6	3,408.1
Deferred amount on refunding	-	-	0.6	0.4	0.6	0.4
Pension and OPEB related	32.9	32.7	25.4	25.3	58.3	58.0
Total deferred outflows of resources	32.9	32.7	26.0	25.7	58.9	58.4
Net pension and OBEB liabilities	167.2	166.6	126.3	126.5	293.5	293.1
Long-term debt	65.5	73.6	458.0	470.8	523.5	544.4
Other liabilities	81.3	84.1	166.5	112.1	247.8	196.2
Total liabilities	314.0	324.3	750.8	709.4	1,064.8	1,033.7
Pension and OPEB related	11.8	7.0	9.0	5.4	20.8	12.4
Deferred inflow of resources	11.8	7.0	9.0	5.4	20.8	12.4
Net position						
Net investment in capital assets	1,478.4	1,421.6	689.2	625.3	2,167.6	2,046.9
Restricted	153.7	160.6	84.7	71.5	238.4	232.1
Unrestricted	71.8	59.5	226.1	81.8	297.9	141.3
Total net position	$ 1,703.9	$ 1,641.7	$ 1,000.0	$ 778.6	$ 2,703.9	$ 2,420.3

The largest portion of Valley Water's net position (80.2%) reflects its investment in capital assets (e.g., land, buildings, infrastructure, machinery, and equipment) less any related debt used to acquire those assets still outstanding. Investment in capital assets are *not* available for future spending. Although Valley Water's investment in its capital assets is reported net of related debt, it should be noted that the resources needed to repay this

reported net of related debt, it should be noted that the resources needed to repay this debt must be provided from other sources, since the capital assets themselves cannot be used to liquidate these liabilities.

For governmental activities, net investment in capital assets increased by $56.8 million or 4.0% compared to the prior fiscal year. Capital assets, net of depreciation, increased by $49.2 million. Long term liabilities, which include related debt outstanding, went down by $7.5 million.

For business type activities, net investment in capital assets increased by $63.9 million or 10.2% over the previous fiscal year. Capital assets, net of depreciation, increased by $102.4 million. Long term liabilities, which include related debt outstanding, went down by $13.0 million.

The balance of unrestricted net position may be used to meet Valley Water's ongoing obligations to citizens, customers, and creditors. For the current fiscal year, Valley Water's unrestricted net position increased by $156.6 million. The decision by Valley Water's Board of Directors to record water as inventory starting in fiscal year 2020 accounted for $134.4 million of the total increase.

Valley Water
Condensed Statement of Activities
(in Millions)

	Governmental Activities		Business-type Activities		Total	
	2020	2019	2020	2019	2020	2019
Revenues:						
Program revenues:						
Water charges	$ -	$ -	$ 266.9	$ 227.7	$ 266.9	$ 227.7
Operating grants and contributions	-	-	3.7	2.8	3.7	2.8
Capital grants and contributions	42.9	40.3	4.3	1.1	47.2	41.4
General revenues:						
Property taxes	148.4	143.8	30.2	30.4	178.6	174.2
Investment earnings	12.9	13.6	8.8	8.1	21.7	21.7
Miscellaneous	3.9	4.3	2.8	1.9	6.7	6.2
Total revenues	208.1	202.0	316.7	272.0	524.8	474.0
Expenses:						
General government	10.9	3.2	-	-	10.9	3.2
Watersheds	134.1	99.4	-	-	134.1	99.4
Interest on long-term debt	2.5	3.1	-	-	2.5	3.1
Water enterprise	-	-	226.9	222.0	226.9	222.0
Total expenses	147.5	105.7	226.9	222.0	374.4	327.7
Increase in net position before transfers	60.6	96.3	89.8	50.0	150.4	146.3
Transfers	1.6	2.7	(1.6)	(2.7)	-	-
Change in net position	62.2	99.0	88.2	47.3	150.4	146.3
Net position, beginning	1,641.7	1,542.7	778.6	731.3	2,420.3	2,274.0
Prior period adjustment	-	-	133.2	-	133.2	-
Net position, ending	$ 1,703.9	$ 1,641.7	$ 1,000.0	$ 778.6	$ 2,703.9	$ 2,420.3

Governmental activities

Net position in governmental activities increased by $62.2 million during the fiscal year. Net revenues from operations of $60.6 million, and transfers in of $1.6 million, resulted in the increase in net position.

The fiscal year net revenue of $60.6 million came from property tax of $148.4 million, capital grants of $42.9 million, investment earnings of $12.9 million, and other revenues of $4.0 million, less operating expenses of $147.5 million. This fiscal year, Valley Water reduced the value of the Lower Guadalupe Flood Improvement capital asset as it was determined that the original flood protection capacity was significantly reduced. This impairment resulted in a capital asset write down of $29.3 million.

Compared to the prior fiscal year, revenues increased $6.1 million and expenses increased by $41.8 million. Key elements of the changes in revenues and expenses from prior year are as follows:

- Capital grants and contributions were $2.6 million or 6.5% higher in the current fiscal year than the previous year as a result of capital reimbursements coming in $4.0 million higher and offsetting the $1.4 million decrease in benefit assessments. Reimbursements of capital costs were $4.0 million higher as more funding was received in the Watershed Funds from the Department of Water Resources for the Prop 1E Stormwater Project and San Francisco Bay Area Restoration Authority for the South San Francisco Bay Shoreline Project. These receipts offset the decrease in capital grants received form the Department of Water resources for other flood management programs.

- Property taxes, the largest source of revenue at $148.4 million or 71.3% of total revenues, increased by $4.6 million or 3.2%, reflective of the strong property values in the Santa Clara county and the surrounding bay area.

- Investment earnings of $12.9 million shows a slight drop of $0.7 million or 5.5% when compared to the prior fiscal year.

- General government expenses were $10.9 million, or $7.7 million higher due to increases in salaries, CalPERS contributions, and spending on furniture and equipment. The redirection of certain staff charges to the newly created COVID project number residing in the General Fund also added to the increase in salaries for the current fiscal year.

- Watersheds expenditures were $134.1 million or 34.9% higher compared to the previous fiscal year due to the asset impairment for the Lower Guadalupe Flood Improvement project noted above and to reflect payments for partnership funding agreements to the Santa Clara Valley Habitat Agency and the U.S. Army Corps of Engineers for flood protection.

Net transfers in were $1.6 million during fiscal year 2020, compared to $2.7 million in the prior fiscal year, reflecting less in transfers from the Water Enterprise Fund to the Information Technology Fund for small capital projects.

Revenue by Sources – Governmental Activities
(FY 2020 & FY 2019)

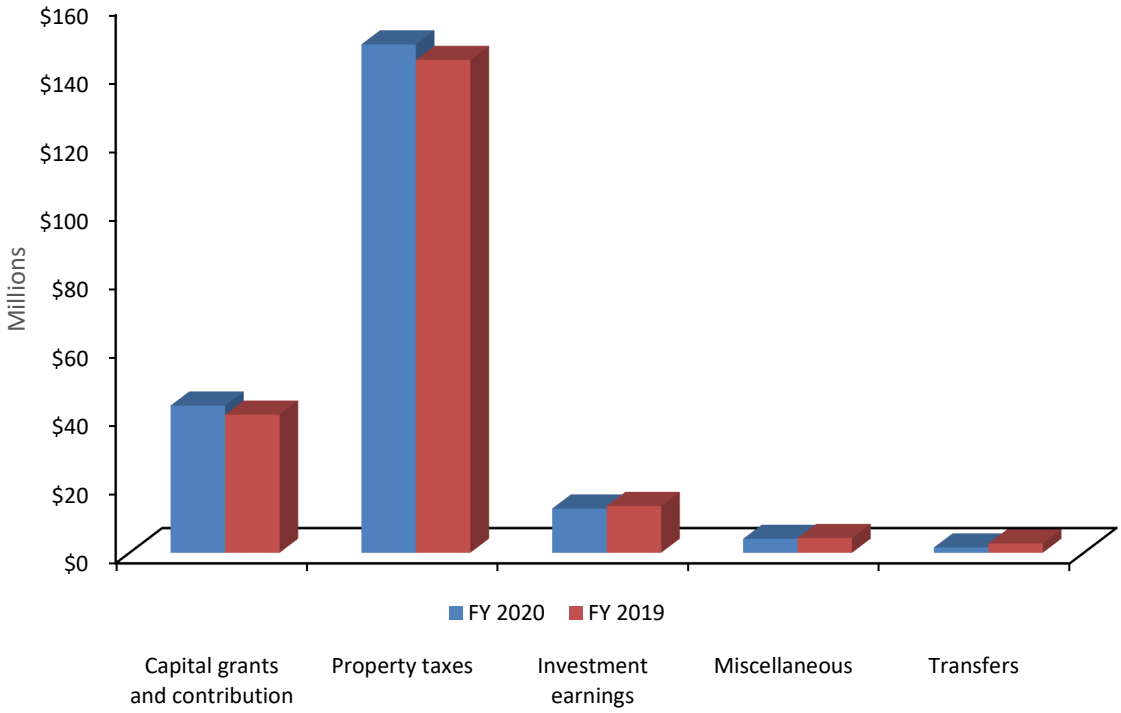

Revenues by Sources – Governmental Activities
(FY 2020)

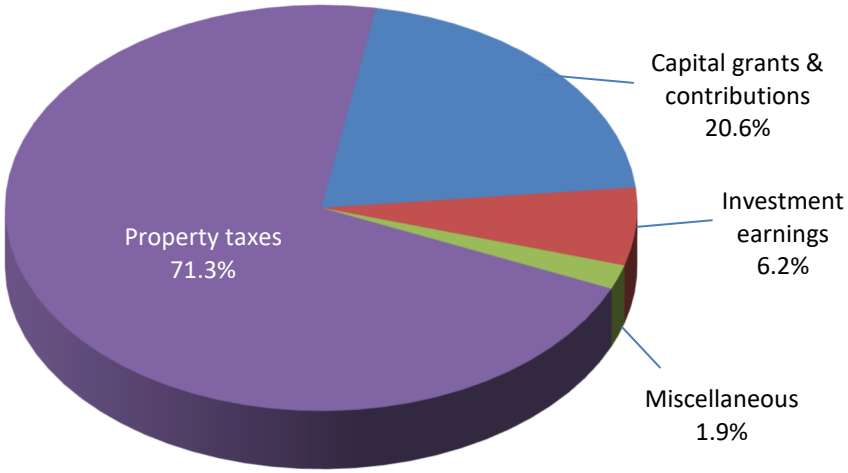

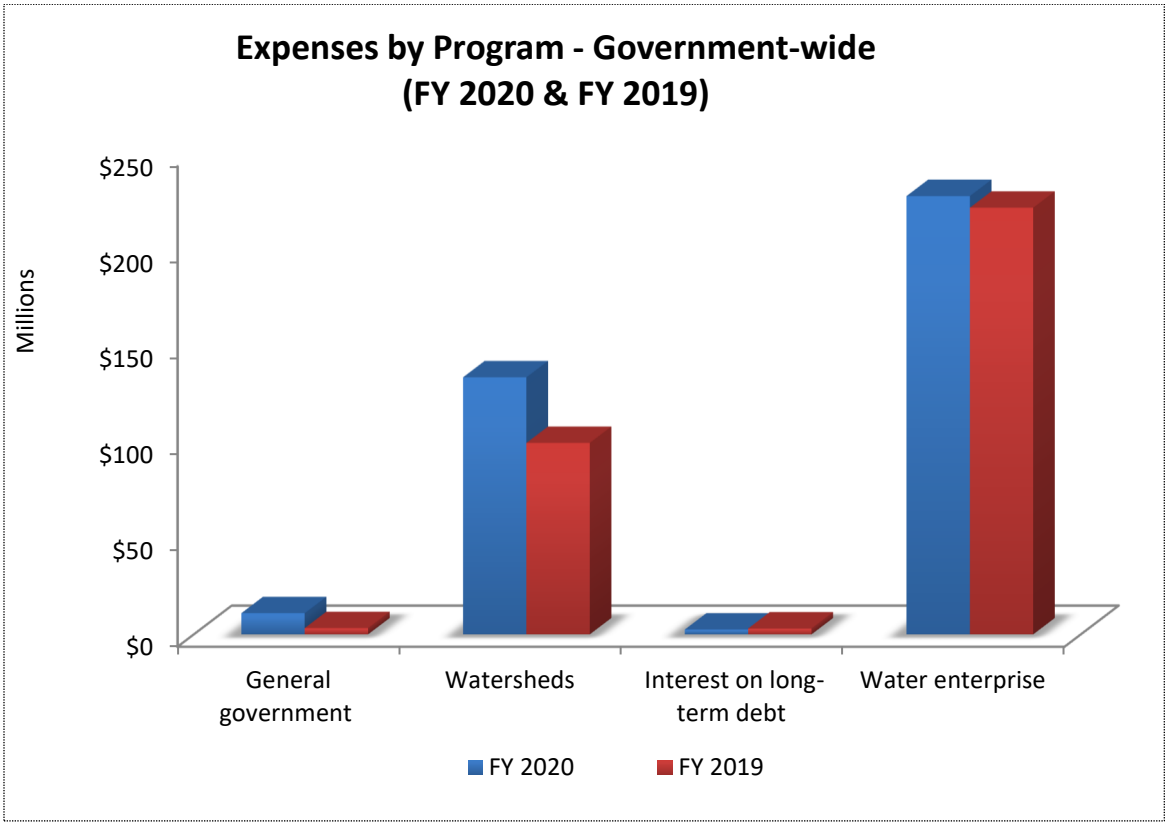

Business-type activities

Net position in business-type activities increased by $221.4 million during the fiscal year. Fiscal year revenue included water charges of $266.9 million, property taxes of $30.2 million, investment earnings of $8.8 million, operating grants and contributions of $3.7 million, capital grants and contributions of $4.3 million, and miscellaneous revenue of $2.8 million. Operating expenses, including water purchases, were $226.9 million. Net revenue before transfers was $89.8 million. Net transfers out of $1.6 million resulted in a change of net position of $88.2 million for the current fiscal year. Starting this fiscal year, Valley Water's Board of Directors decided to recognize stored water as inventory. The implementation of this decision resulted in a $133.2 million increase to the beginning net position for fiscal year 2020.

Compared to the prior fiscal year, total revenues increased by $44.7 million and expenses increased $4.9 million. Key elements of the changes in revenues and expenses from prior year are as follows:

- Total water charge revenue, at 84.3% of total revenue source, was $39.2 million or 17.2% higher from the prior fiscal year. Groundwater and treated water

revenues were up $30.7 million and $8.6 million, respectively. Groundwater volume was up versus prior year, and both revenue sources experienced higher water rates.

- Operating grants and contributions increased $0.9 million over the prior fiscal year as more was received from the City of San Jose for its cost share payment of the Advanced Water Treatment Facility Integration agreement.

- Capital grants and contributions increased $3.2 million compared to the last fiscal year as more capital costs reimbursements from the Department of Water Resources and the California Water Commission were received for flood management programs.

- Water enterprise expenses increased by $4.9 million or 2.2% over the prior fiscal year due to increased costs for purchased water, equipment repair and replacement, utilities, and other technical services.

Revenues by Sources - Business-type Activities
(FY 2020 & FY 2019)

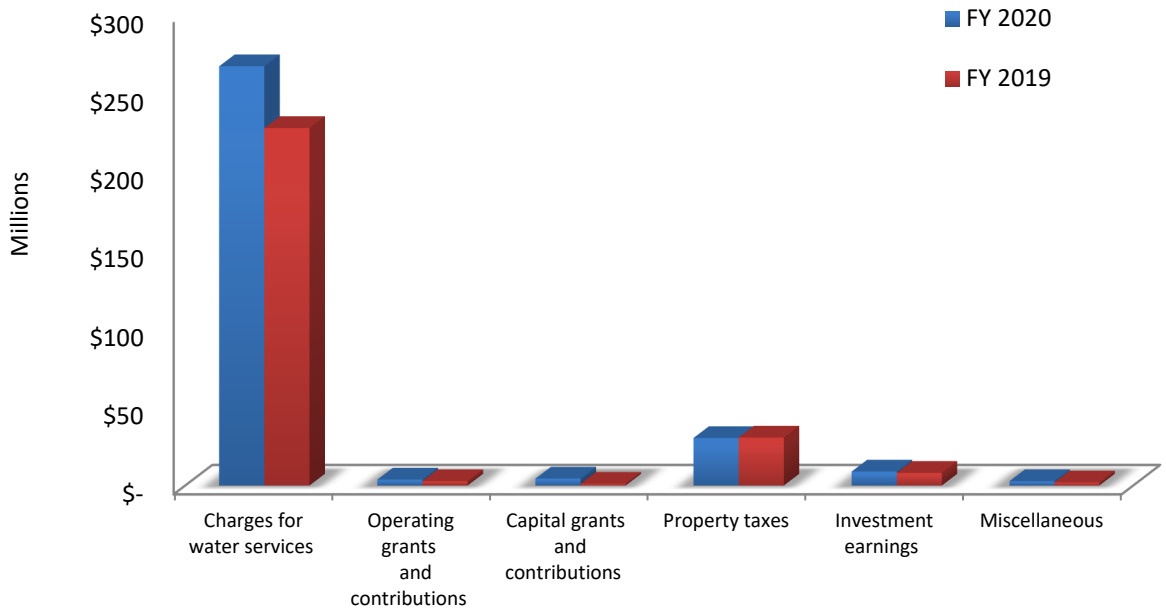

Revenues by Source – Business-type Activities
(FY 2020)

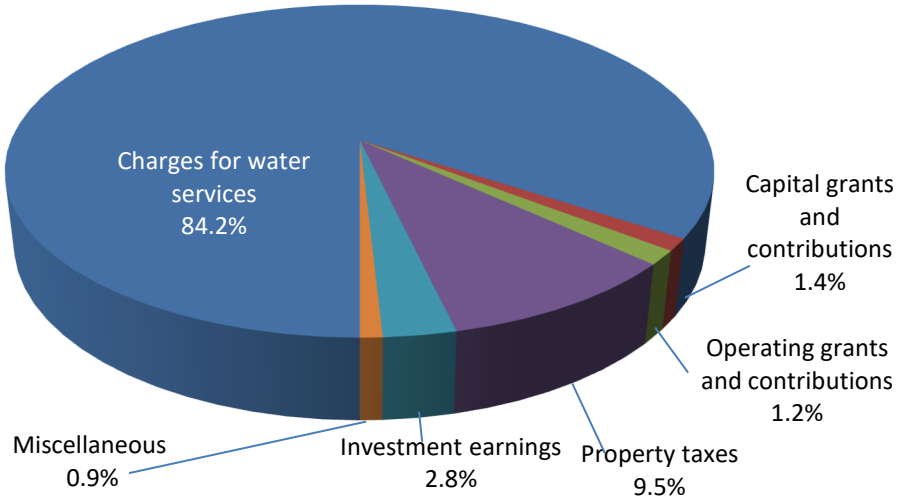

Cash flow for the government-wide activities shows a net increase of $45.6 million for the current fiscal year. A comparative breakdown of cash flow activities for the current and prior fiscal years is shown below.

Valley Water
Condensed Statement of Cash Flow
For the year ended June 30, 2020 and 2019
(in Millions)

	June 30, 2020			June 30, 2019		
	Governmental	Business-type	Total	Governmental	Business-type	Total
Cash flow from operating activities						
Net income	$ 62.2	$ 88.2	$ 150.4	$ 99.0	$ 47.3	$ 146.3
Adjustments to reconcile net income to net cash provided by operating activities:						
Depreciation and amortization	11.0	34.0	45.0	11.0	32.7	43.7
(Increase) decrease in current assets	15.9	(10.3)	5.6	(17.7)	10.4	(7.3)
(Increase) decrease in internal charges	(4.2)	4.2	-	(5.5)	5.5	-
Increase (decrease) in current liabilities	4.0	56.1	60.1	(4.9)	(54.1)	(59.0)
Increase (decrease) in deferred revenues	(7.0)	(1.2)	(8.2)	7.0	-	7.0
(Increase) decrease in deferred inflows/ outflows of resources	4.6	3.2	7.8	9.5	7.5	17.0
Net cash provided by operations	$ 86.5	$ 174.2	$ 260.7	$ 98.4	$ 49.3	$ 147.7
Cash provided/(used) by the decrease/ (increase) in investments	2.1	0.1	2.2	4.3	-	4.3
Cash provided/(used) by the decrease/ (increase) in capital assets	(60.1)	(136.4)	(196.5)	(81.7)	(62.9)	(144.6)
Cash provided/(used) by the increase/ (decrease) in non current liabilities	(7.3)	(13.5)	(20.8)	(16.5)	79.9	63.4
Net increase/(decrease) in cash	$ 21.2	$ 24.4	$ 45.6	$ 4.5	$ 66.3	$ 70.8

FINANCIAL ANALYSIS OF VALLEY WATER'S FUNDS

Valley Water uses fund accounting to ensure and demonstrate compliance with finance-related legal requirements. The following analysis refers to the Basic Financial Statements for the Governmental and Proprietary Funds beginning on page 38.

Governmental funds

The focus of governmental funds is to provide information on near-term inflows, outflows, and balances of spendable resources. As of June 30, 2020, Valley Water's governmental funds reported combined ending fund balances of $350.1 million, an increase of $6.8 million for the fiscal year.

Compared to the prior year, revenues increased by $6.1 million and total expenditures increased by $11.5 million. Property taxes went up $4.6 million due to the upward trend of property values in the area. Reimbursements of capital cost were $4.0 million higher as more funding was received in the Watershed Funds from the Department of Water Resources for the Prop 1E Stormwater Project and San Francisco Say Area Restoration Authority for the South San Francisco Bay Shoreline Project.

Total expenditures were $11.5 million higher compared to the prior fiscal year, due to payments on cost share agreements and other agreements for the Safe, Clean Water and Natural Flood Protection Program.

Approximately $186.2 million or 53.2% of the total fund balance amount ($350.1 million) constitutes committed and assigned for specific purposes. The remainder of the fund balance is restricted to indicate that it is not available for new spending because of the external enforceable limitations on its use to 1) fund Safe, Clean Water & Natural Flood Protection projects ($158.5 million) and; 2) pay debt service ($5.4 million).

General fund

The general fund is the chief operating fund of Valley Water supporting all administrative and strategic support services costs for the organization. It accounts for all financial resources except those required to be accounted for in another fund and is supported primarily by overhead reimbursements from other funds. At the end of the current fiscal year, the committed and assigned fund balance of the General Fund was $14.2 million. The total fund balance remained relatively flat as net revenues of $0.9 million were largely offset by net transfers out of $0.8 million.

Special revenue funds

The special revenue funds are used to account for specific revenue sources for which expenditures are restricted by law or regulation to finance particular watershed functions or activities of Valley Water. The available fund balances at the end of the current fiscal year for the special revenue funds were $330.5 million, which increased during the current fiscal year by $8.6 million or 2.7%.

The change in fund balance for the Watershed and Stream Stewardship fund was $18.7 million or 12.2% higher compared to last fiscal year. This was mainly due to the increase in capital cost reimbursements received and lower capital improvement project expenditures. Net revenue of $50.8 million was offset by net transfers out of $32.1 million (see Note 14).

Fund Balance for the Safe, Clean Water and Natural Flood Protection Program fund decreased by $10.0 million as operating expenditures increased and revenues fell compared to the prior fiscal year. Net expenditures of $30.9 million was mitigated by transfers in of $20.9 million (see Note 14) to account for the $10.0 million decrease in fund balance.

COP construction fund

The COP construction fund is used to account for resources used for the acquisition or construction of major capital projects within the governmental fund types. The beginning available fund balance of $2.0 million was transferred out to the Watershed and Stream Stewardship fund ($1.5 million) and Safe, Clean Water and Natural Flood Protection Program ($0.5 million) to fund certain projects.

COP debt service fund

The COP debt service fund is used to account for resources used for debt service payments. It has a total fund balance of $5.4 million, all of which is reserved for payment of debt service.

Proprietary funds

Valley Water's proprietary funds provide a detailed breakdown of the same type of information found in the government-wide financial statements.

Water Enterprise fund

The Water Enterprise fund accounts for operations in a manner similar to a private business enterprise. Operations are accounted for to show net income or loss from operations. The fund is intended to be entirely or predominantly self-supported by user charges.

Net position of the Water Enterprise fund at the end of the fiscal year was $969.0 million. Income from current year operation netted $91.9 million. Operating revenues of $267.1 million more than offset the $180.6 million of operating expenses. Year over year, operating revenues increased $39.4 million or 17.3% due to higher groundwater revenue, which was $30.6 million more as a result of the increase in volume sold and increased rates. Treated Water revenue was also higher by $8.6 million over the prior fiscal year, reflective of the increase in rates and volumes sold. Operating expenses were higher by $5.3 million or 2.7%, due mainly to increased costs for purchased water, equipment repair and replacement, utilities, and other technical services.

Net non-operating income was $2.6 million for fiscal year 2020 or $1.6 million higher from the prior fiscal year. Higher operating grants revenues of $1.0 million from the City of San Jose for the Advanced Water Treatment Facility cost-share agreement and $0.5 million from well permit fees accounted for most of the increase for the current fiscal year.

State Water Project fund

The State Water Project fund was established and approved by the Board of Directors on October 26, 2010. This fund accounts for the State Water Project Tax receipts pursuant to Section 1B of Article 13A of the California Constitution to pay for county-wide voter-approved State Water Project contract obligations. Fund resources are used for the Water System Revenue Bond and other related capital expenditures billed by the State of California Department of Water Resources and are accounted for in such a manner as to restrict the use of the resources exclusively for the State Water Project related costs.

Ending net position was $31.9 million or $0.5 million higher than the prior fiscal year. Operating expenses were $22.7 million, of which $21.8 million or 95.8% was cost associated with water purchases. Net non-operating revenues were $23.2 million, with property taxes contributing $21.8 million or 94.1% of the total.

Internal Service Funds

Valley Water has three internal service funds - the Equipment Fund, Risk Management Fund, and Information Technology Fund. Revenues to the funds are generated from fees charged for services provided to Valley Water operating programs.

The Equipment fund charges replacement and maintenance costs to all operations, operating, and capital projects based on equipment assignment and hourly usage of equipment on projects. The fund's annual reimbursement charge for the replacement and maintenance cost of equipment is determined during the budget process and varies yearly depending upon need. Ending net position for the fund was $10.2 million, or $0.6 million more than the prior fiscal year.

The Risk Management fund charges premiums based on exposure levels by project for liability, property, worker's compensation and self-insurance costs. Revenues required to properly reimburse the Risk Management Fund are determined during the budget process and varies yearly depending upon need. Ending net position for the fund was $3.8 million, or $0.9 million less than the prior fiscal year.

The Information Technology fund was established on July 1, 2014 to account for the acquisition, installation, replacement and maintenance costs of district-wide capital charges related to information technology projects. Beginning with fiscal year 2019, the fund also accounts for annual operations associated with information technology activities. The annual reimbursement charge to the Information Technology Fund is determined during the budget process and varies yearly depending upon need. Operating revenues were $15.1 million and operating expenses were $23.2 million. The fund's net position was $20.5 million or $3.3 million lower than the prior fiscal year.

GENERAL FUND BUDGETARY HIGHLIGHTS

The summary table below shows a final budget of $61.5 million for operating and capital expenditures for fiscal year 2020. The adopted budget was $61.3 million. There were no capital projects carried forward from the prior year capital projects budget. Current fiscal year budget adjustments increased the final budget slightly.

Adopted Budget	+ Capital Projects Budget Remaining Carry-forward	+ Current Year Budget Adjustments	= Final Budget
$61.3 million	$0.0 million	$0.2 million	$61.5 million

Total expenditures (budgetary basis) in the General Fund for fiscal year 2020 was $60.6 million, which is $5.7 million higher than the prior year.

Beginning fiscal year 2019, all project expenditures relating to the Information Technology Department were moved to the Information Technology Fund. These expenditures were previously accounted for in the General Fund.

CAPITAL ASSETS

Valley Water's capital asset balance, net of accumulated depreciation, for governmental and business-type activities amounts to $2.8 billion at June 30, 2020. Capital asset components include intangible rights and software, land, buildings, structures and improvements (which include the flood control improvement), machinery and equipment. During fiscal year 2020, the total increase in Valley Water's capital assets was $151.6 million or 5.7%. Governmental and business-type activities increased by 3.3% and 8.8%, respectively.

Detailed information on Valley Water's capital assets activity for the current fiscal year can be found in Note 6 of this report.

Valley Water
Capital Assets at June 30, 2020
(in Millions)

	2020	2019	Increase/ Decrease
Governmental Activities			
Capital Assets			
Land	$ 191.7	$ 191.7	$ -
Intangibles - easements	27.4	27.3	0.1
Construction in progress	668.1	596.1	72.0
Buildings	42.0	42.0	-
Structure and improvements	772.6	784.0	(11.4)
Equipment	21.6	21.6	-
Intangible software	-	-	-
Less accumulated depreciation	(182.9)	(172.2)	(10.7)
Internal Service Funds			
Construction in progress	-	2.1	(2.1)
Equipment	31.4	28.8	2.6
Intangible software	4.3	2.6	1.7
Less accumulated depreciation	(22.4)	(19.4)	(3.0)
Total Governmental Activities	**$ 1,553.8**	**$ 1,504.6**	**$ 49.2**
Business-type Activities			
Land	$ 20.0	$ 19.2	$ 0.8
Intangibles - easement and software	0.2	0.2	-
Construction in progress	493.8	399.6	94.2
Contract water and storage rights	226.6	216.6	10.0
Buildings	97.2	91.0	6.2
Structures and improvements	939.5	918.7	20.8
Equipment	29.9	28.3	1.6
Less accumulated depreciation	(540.9)	(509.7)	(31.2)
Business-type Activities	**$ 1,266.3**	**$ 1,163.9**	**$ 102.4**
Total			
Capital Assets			
Land	$ 211.7	$ 210.9	$ 0.8
Intangibles - easements	27.6	27.5	0.1
Construction in progress	1,161.9	997.8	164.1
Contract water and storage rights	226.6	216.6	10.0
Buildings	139.2	133.0	6.2
Structure and improvements	1,712.1	1,702.7	9.4
Equipment	82.9	78.7	4.2
Intangible software	4.3	2.6	1.7
Less accumulated depreciation	(746.2)	(701.3)	(44.9)
Total Governmental and and Business-type Activities	**$ 2,820.1**	**$ 2,668.5**	**$ 151.6**

LONG-TERM OBLIGATIONS

At the end of the current fiscal year, Valley Water had total long-term obligations of $898.1 million. Valley Water's long-term obligations outstanding at the end of the fiscal year consisted of the following:

Valley Water's Outstanding Obligations

(in Millions)

	Governmental Activities		Business-type Activities		Total	
	2020	2019	2020	2019	2020	2019
Certificates of participation	$ 65.5	$ 73.6	$ 79.1	$ 124.4	$ 144.6	$ 198.0
Revenue bonds	-	-	378.9	346.3	378.9	346.3
Compensated absences	10.3	9.0	6.3	5.4	16.6	14.4
Semitropic water banking	-	-	10.0	10.0	10.0	10.0
Bond discount	-	-	-	(0.1)	-	(0.1)
Bond premium	9.9	11.5	37.0	38.6	46.9	50.1
Claims payable	7.5	7.1	-	-	7.5	7.1
Net pension liability	134.3	125.3	100.6	94.6	234.9	219.9
Other post employment benefit	33.0	41.3	25.7	31.9	58.7	73.2
Total	$ 260.5	$ 267.8	$ 637.6	$ 651.1	$ 898.1	$ 918.9

The credit ratings for Valley Water outstanding debt reflect a high-grade investment quality debt. They are based on Valley Water's positive fiscal policy and financial strengths. The bond ratings are either the highest for a water related governmental entity in the State of California or among the highest. Bonds issued at this credit rating result in lower interest rates and corresponding lower debt service payments. Valley Water's ratings are the same on a secured and unsecured basis pursuant to the rating methodologies of the respective rating agencies.

Please see table below for current ratings.

	Water Utility		Watershed
	Senior Debt	Parity Debt	Debt
Moody's	Aa1	Aa1	Aa1
Standard & Poor's	AA-	N/A	AAA
Fitch	N/A	AA+	AA+

Valley Water's total obligations decreased by $20.8 million during fiscal year 2020. $7.3 million of the decrease was in the governmental activities and $13.5 million of the decrease was in the business-type activities.

Additional information on Valley Water's long-term debt can be found in Note 7 of this report.

NEXT YEAR'S BUDGET

Valley Water's $609.5 million budget for fiscal year 2021 will focus on the following work plan strategies:

- Actively pursue new water storage opportunities
- Actively participate in decisions regarding the California Delta Conveyance
- Lead Recycled and Purified Water Efforts with committed partners
- Engage and educate the community, elected officials and staff on future water supply strategies in Santa Clara County
- Advance Anderson Dam Seismic Retrofit Project
- Protect and maintain existing assets and infrastructure
- Pursue opportunities to improve internal capacity to acquire regulatory permits
- Attain net positive impact on the environment when implementing flood protection and water supply projects
- Promote the protection of creeks, bay, and other aquatic ecosystems from threats of pollution and degradation
- Continue the Fisheries and Aquatic Habitat Collaborative Effort (FAHCE)
- Address future impacts of climate change to Valley Water's mission and operations
- Advance diversity and inclusion
- Maintain appropriate staffing levels and expertise
- Provide affordable and cost-effective level of services

REQUESTS FOR INFORMATION

This financial report is designed to provide citizens, taxpayers, customers, investors, and creditors with a general overview of Valley Water's finances, and to demonstrate Valley Water's accountability for the money it receives. If you have any questions about this report or need any additional information, contact the General Accounting Unit as noted below.

Mail - 5750 Almaden Expressway, San Jose, CA 95118
Phone - (408) 265-2600
Email - jsalandanan@valleywater.org

BASIC FINANCIAL STATEMENTS

VALLEY WATER
Statement of Net Position
June 30, 2020
(Dollars in Millions)

	Governmental Activities	Business-type Activities	Total
ASSETS			
Cash and investments (Note 3)	$ 427.8	$ 288.2	$ 716.0
Restricted cash and investments (Note 3)	5.5	0.1	5.6
Receivables (net):			
Accounts	2.8	38.6	41.4
Interest	2.3	-	2.3
Taxes	0.2	0.1	0.3
Inventory - water	-	134.4	134.4
Deposits and other assets	3.5	7.0	10.5
Total current assets	442.1	468.4	910.5
Internal balances	0.9	(0.9)	-
Capital assets (Note 6):			
Contract water and storage rights, net	-	38.5	38.5
Depreciable, net	666.6	713.8	1,380.4
Nondepreciable	887.2	514.0	1,401.2
Total assets	1,996.8	1,733.8	3,730.6
DEFERRED OUTFLOWS OF RESOURCES			
Deferred amount on refunding	-	0.6	0.6
Deferred outflows of resources - pension activities (Note 11)	26.8	20.8	47.6
Deferred outflows of resources - OPEB (Note 12)	6.1	4.6	10.7
Total deferred outflows of resources	32.9	26.0	58.9
LIABILITIES			
Accounts payable	17.9	32.0	49.9
Accrued liabilities	0.5	1.8	2.3
Commercial paper, net of discount (Note 7)	30.0	72.7	102.7
Deposits payable	3.8	6.7	10.5
Accrued interest payable	1.3	-	1.3
Total current liabilities	53.5	113.2	166.7
Noncurrent liabilities (Note 7):			
Due within one year	14.4	17.1	31.5
Due in more than one year	246.1	620.5	866.6
Total liabilities	314.0	750.8	1,064.8
DEFERRED INFLOWS OF RESOURCES			
Deferred inflows of resources - pension activities (Note 11)	5.2	4.0	9.2
Deferred inflows of resources - OPEB (Note 12)	6.6	5.0	11.6
Total deferred inflows of resources	11.8	9.0	20.8
NET POSITION (Note 10)			
Net investment in capital assets	1,478.4	689.2	2,167.6
Restricted:			
Debt service	4.1	0.1	4.2
Safe, Clean Water - other activities	149.6	-	149.6
Water Utility San Felipe emergency	-	3.3	3.3
GP5 Reserve	-	6.6	6.6
Water Utility rate stabilization	-	23.5	23.5
Water Utility state water project	-	16.8	16.8
Public-private partnership	-	8.0	8.0
Advanced water purification center	-	1.3	1.3
Supplemental water supply	-	15.1	15.1
Drought reserve	-	10.0	10.0
Unrestricted	71.8	226.1	297.9
Total net position	$ 1,703.9	$ 1,000.0	$ 2,703.9

See accompanying notes to basic financial statements

VALLEY WATER

Statement of Activities
For the Year Ended June 30, 2020
(Dollars in Millions)

	Governmental Activities					
Description	**General Government**	**Watersheds**	**Interest on Long-term Debt**	**Total**	**Business-Type Activities**	**Total**
Expenses:						
Operations and operating projects	$ 10.9	$ 134.1	$ 2.5	$ 147.5	$ -	$ 147.5
Water cost of production	-	-	-	-	226.9	226.9
Program revenues:						
Charges for water services	-	-	-	-	266.9	266.9
Operating grants and contributions	-	-	-	-	3.7	3.7
Capital grants and contributions	-	42.9	-	42.9	4.3	47.2
Net program revenue (expense)	$ (10.9)	$ (91.2)	$ (2.5)	(104.6)	48.0	(56.6)
General revenues:						
Property taxes (Note 8)				148.4	30.2	178.6
Unrestricted investment earnings				12.9	8.8	21.7
Miscellaneous				3.9	2.8	6.7
Transfers (Note 14)				1.6	(1.6)	-
Total general revenues and transfers				166.8	40.2	207.0
Change in net position				62.2	88.2	150.4
Net position, beginning of year				1,641.7	778.6	2,420.3
Prior period adjustment (Note 15)				-	133.2	133.2
Net position, beginning of year, restated				1,641.7	911.8	2,553.5
Net position, end of year				$ 1,703.9	$ 1,000.0	$ 2,703.9

See accompanying notes to basic financial statements.

VALLEY WATER

Balance Sheet
Governmental Funds
June 30, 2020
(Dollars in Millions)

			Special Revenue Fund	
	General		Watershed & Stream Stewardship	
ASSETS				
Cash and investments (Note 3)	$	13.6	$	173.2
Restricted cash and investments (Note 3)		-		0.1
Receivables:				
Accounts		-		0.3
Interest		2.3		-
Taxes		-		0.2
Deposits and other assets		0.2		2.3
Total assets	$	16.1	$	176.1
LIABILITIES AND FUND BALANCES				
Liabilities:				
Accounts payable	$	1.4	$	1.3
Accrued liabilities		0.5		-
Commercial papers		-		-
Deposits payable		-		2.8
Total liabilities		1.9		4.1
Fund balances (Note 9):				
Restricted fund balance		-		-
Committed fund balance		8.2		160.5
Assigned fund balance		6.0		11.5
Total fund balances		14.2		172.0
Total liabilities and fund balances	$	16.1	$	176.1

See accompanying notes to basic financial statements.

Special Revenue Fund	Capital Project Fund	Debt Service Fund	
Safe, Clean Water & Natural Flood Protection Program	COP Construction Fund	COP Debt Service	Total Governmental Funds
$ 199.4	$ -	$ -	$ 386.2
-	-	5.4	5.5
2.5	-	-	2.8
-	-	-	2.3
-	-	-	0.2
0.9	-	-	3.4
$ 202.8	$ -	$ 5.4	$ 400.4
$ 13.3	$ -	$ -	$ 16.0
-	-	-	0.5
30.0	-	-	30.0
1.0	-	-	3.8
44.3	-	-	50.3
158.5	-	5.4	163.9
-	-	-	168.7
-	-	-	17.5
158.5	-	5.4	350.1
$ 202.8	$ -	$ 5.4	$ 400.4

VALLEY WATER

Reconciliation of the Balance Sheet of
Governmental Funds to the Statement of Net Position
June 30, 2020
(Dollars in Millions)

Amount reported for governmental activities in the statement of net position are different because:

Fund balances of governmental funds	$	350.1
Capital assets used in governmental activities are not current financial resources and, therefore, are not reported in the balance sheet of governmental funds.		1,540.5
Internal service funds are used by management to charge the costs of equipment, information technology, and risk management to individual funds. The assets and liabilities of the internal service funds are included in governmental activities in the statement of net position.		35.4
Interest payable on long-term debt does not require the use of current financial resources and, therefore, interest payable is not accrued as a liability in the balance sheet of governmental funds.		(1.3)
Long-term liabilities are not due and payable in the current period and, therefore, are not reported in the balance sheet of governmental funds:		
Certificates of participation		(65.5)
Net original issue premium		(9.9)
Compensated absences		(9.8)
Net pension liability and related deferrals		(103.6)
Net OPEB liability and related deferrals		(32.0)
Net position of governmental activities	$	1,703.9

See accompanying notes to basic financial statements

This page intentionally left blank

VALLEY WATER

Statement of Revenues, Expenditures and
Changes in Fund Balances
Governmental Funds
For the Year Ended June 30, 2020
(Dollars in Millions)

		Special Revenue Fund
	General	Watershed & Stream Stewardship
Revenues:		
Property taxes (Note 8)	$ 9.2	$ 93.1
Benefit assessments (Note 8)	-	13.4
Use of money and property:		
Investment income (Note 5)	0.5	5.2
Rental	-	1.7
Reimbursement of capital costs (Note 4)	-	15.2
Other	0.1	1.6
Total revenues	9.8	130.2
Expenditures:		
Current:		
Operations and operating projects	5.9	51.4
Capital improvement projects	3.0	28.0
Debt service:		
Principal repayment	-	-
Interest and fiscal agent fees	-	-
Total expenditures	8.9	79.4
Excess (deficiency) of revenues over (under) expenditures	0.9	50.8
Other financing sources (uses):		
Transfers in (Note 14)	0.4	1.6
Transfers out (Note 14)	(1.2)	(33.7)
Total other financing sources (uses)	(0.8)	(32.1)
Net change in fund balances	0.1	18.7
Fund balances, beginning of year	14.1	153.3
Fund balances, end of year	$ 14.2	$ 172.0

See accompanying notes to basic financial statements.

Special Revenue Fund	Capital Project Fund	Debt Service Fund	
Safe, Clean Water & Natural Flood Protection Program	COP Construction Fund	COP Debt Service	Total Governmental Funds
$ 46.1	$ -	$ -	$ 148.4
-	-	-	13.4
5.8	-	0.1	11.6
0.4	-	-	2.1
14.3	-	-	29.5
-	-	-	1.7
66.6	-	0.1	206.7
22.9	-	-	80.2
73.9	-	-	104.9
-	-	8.1	8.1
0.7	-	3.5	4.2
97.5	-	11.6	197.4
(30.9)	-	(11.5)	9.3
20.9	-	11.5	34.4
-	(2.0)	-	(36.9)
20.9	(2.0)	11.5	(2.5)
(10.0)	(2.0)	-	6.8
168.5	2.0	5.4	343.3
$ 158.5	$ -	$ 5.4	$ 350.1

VALLEY WATER

Reconciliation of the Statement of Revenues, Expenditures and Change in
Fund Balances of Governmental Funds to the Statement of Activities
For the Year Ended June 30, 2020
(Dollars in Millions)

Amounts reported for governmental activities in the statement of activities are different because:

Net change in fund balances - total governmental funds	$	6.8
Governmental funds report capital outlays as expenditures. However, in the statement of activities the cost of those assets is allocated over their estimated useful lives and reported as depreciation expense. This amount represents capital outlays, net of depreciation.		
Capital Outlay		60.5
Depreciation		(11.0)
Accrued interest expense on long-term debt is reported in the government-wide statement of activities, but they do not require the use of current financial resources. This amount represents the net change in accrued interest expense not reported in governmental funds.		0.1
The issuance of long-term debt (e.g. bonds, leases) provides current financial resources to governmental funds, while the repayment of the principal of long-term debt consumes the current financial resources of governmental funds. Neither transactions, however, has any effect on net position. Also, governmental funds report the effect of issuance costs, premiums, discounts, and similar items when debt is first issued, whereas the amounts are deferred and amortized in the statement of activities.		
Certificates of participation repayment		8.1
Net original issue premium		1.6
Internal service funds are used by management to charge the costs of equipment, information technology, and risk management to individual funds. The net revenue of internal service funds is reported with governmental activities.		0.6
Some revenues and expenses reported in the statement of activities do not provide or require the use of current financial resources and, therefore, are not reported as revenues or expenditures in governmental funds:		
Compensated absences		(1.1)
Change in net OPEB liability, deferred inflows and outflows		3.1
Change in net pension liability, deferred inflows and outflows		(6.5)
Change in net position of governmental activities	$	62.2

See accompanying notes to basic financial statements

VALLEY WATER
Statement of Net Position
Proprietary Funds
June 30, 2020
(Dollars in Millions)

	Business-type Activities			Governmental Activities
	Water Enterprise Fund	State Water Project Fund	Total Enterprise Funds	Internal Service Funds
ASSETS				
Current assets:				
Cash and investments (Note 3)	$ 271.2	$ 17.0	$ 288.2	$ 41.6
Receivables:				
Accounts	38.6	-	38.6	-
Taxes	-	0.1	0.1	-
Inventory - water	134.4		134.4	-
Deposits and other assets	7.0	-	7.0	0.1
Total current assets	451.2	17.1	468.3	41.7
Non current assets:				
Restricted cash and investments (Note 3)	0.1	-	0.1	-
Capital assets (Note 6):				
Contract water rights, net	23.4	15.1	38.5	-
Depreciable, net	713.8	-	713.8	13.3
Nondepreciable	514.0	-	514.0	-
Total non current assets	1,251.3	15.1	1,266.4	13.3
Total assets	1,702.5	32.2	1,734.7	55.0
DEFERRED OUTFLOWS OF RESOURCES				
Deferred amount on refunding	0.6	-	0.6	-
Deferred outflows of resources - pension activities (Note 11)	20.8	-	20.8	1.6
Deferred outflows of resources - OPEB (Note 12)	4.6	-	4.6	0.4
Total deferred outflows of resources	26.0	-	26.0	2.0
LIABILITIES				
Current liabilities:				
Accounts payable	31.7	0.3	32.0	1.9
Accrued liabilities	1.8	-	1.8	-
Commercial paper (Note 7)	72.7	-	72.7	-
Deposits payable	6.7	-	6.7	-
Claims payable (Note 13)	-	-	-	2.1
Bonds payable - current (Note 7)	15.7	-	15.7	-
Compensated absence	1.4	-	1.4	0.1
Total current liabilities	130.0	0.3	130.3	4.1
Non current liabilities:				
Bonds payable - net of discounts and premiums (Note 7)	479.4	-	479.4	-
Claims payable (Note 13)	-	-	-	5.4
Compensated absence	4.9	-	4.9	0.4
Net pension liability (Note 11)	100.6	-	100.6	10.4
Other post employment benefits liability (Note 12)	25.6	-	25.6	1.5
Other debt	10.0	-	10.0	-
Total non current liabilities	620.5	-	620.5	17.7
Total liabilities	750.5	0.3	750.8	21.8
DEFERRED INFLOWS OF RESOURCES				
Deferred inflows of resources - pension activities (Note 11)	4.0	-	4.0	0.3
Deferred inflows of resources - OPEB (Note 12)	5.0	-	5.0	0.4
Total deferred inflows of resources	9.0	-	9.0	0.7
NET POSITION (Note 10)				
Net investment in capital assets	674.1	15.1	689.2	13.3
Restricted:				
Cash with fiscal agents	0.1	-	0.1	-
San Felipe operations	3.3	-	3.3	-
GP5 reserve	6.6	-	6.6	-
State water project	-	16.8	16.8	-
Rate stabilization	23.5	-	23.5	-
Public-private partnership	8.0		8.0	-
Advanced water purification center	1.3	-	1.3	-
Supplemental water supply	15.1	-	15.1	-
Drought reserve	10.0	-	10.0	-
Unrestricted	227.0	-	227.0	21.2
Total net position	$ 969.0	$ 31.9	1,000.9	$ 34.5
Adjustment to reflect the consolidation of internal service fund activities related to the enterprise funds.			(0.9)	
Net position of business-type activities			$ 1,000.0	

See accompanying notes to basic financial statements.

VALLEY WATER

Statement of Revenues, Expenses and Changes in Net Position
Proprietary Funds
For the Year Ended June 30, 2020
(Dollars in Millions)

	Business-type Activities			Governmental Activities
	Water Enterprise Fund	State Water Project Fund	Total Enterprise Funds	Internal Service Funds
Operating revenues:				
Ground water production charges	$ 112.6	$ -	$ 112.6	$ -
Treated water charges	152.6	-	152.6	-
Surface and recycled water revenue	1.7	-	1.7	-
Charges for services	-	-	-	25.7
Other	0.2	-	0.2	-
Total operating revenues	267.1	-	267.1	25.7
Operating expenses:				
Sources of supply	64.1	21.8	85.9	-
Water treatment	38.5	-	38.5	-
Transmission and distribution:				
Raw water	14.0	-	14.0	-
Treated water	1.7	-	1.7	-
Administration and general	32.0	-	32.0	6.5
Equipment maintenance	-	-	-	25.7
Depreciation and amortization	30.3	0.9	31.2	2.8
Total operating expenses	180.6	22.7	203.3	35.0
Operating income (loss)	86.5	(22.7)	63.8	(9.3)
Nonoperating revenues (expenses):				
Property taxes (Note 8)	8.4	21.8	30.2	-
Investment income (Note 5)	8.8	-	8.8	1.3
Operating grants	3.7	-	3.7	-
Rental income	0.1	-	0.1	-
Other	1.0	1.4	2.4	0.3
Interest and fiscal agent fees	(19.4)	-	(19.4)	-
Net nonoperating revenues (expenses)	2.6	23.2	25.8	1.6
Income before capital contributions and transfers	89.1	0.5	89.6	(7.7)
Capital contributions (Note 4)	4.3	-	4.3	-
Transfers in (Note 14)	1.1	-	1.1	4.1
Transfers out (Note 14)	(2.6)	-	(2.6)	-
Change in net position	91.9	0.5	92.4	(3.6)
Net position, beginning of year	743.9	31.4	775.3	38.1
Prior period adjustments				
Inventory, beginning of year	133.2	-	133.2	-
Net position, beginning of year, restated	877.1	31.4	908.5	38.1
Net position, end of year	$ 969.0	$ 31.9	$ 1,000.9	$ 34.5
Adjustment to reflect the consolidation of internal service fund activities related to the enterprise fund.			(0.9)	
Net position of business-type activities			$ 1,000.0	

Reconciliation of the Statement of Revenues, Expenses and Change in Net Position to the Statement of Activities:

Amounts reported as business-type activities in the statement of activities are different because:

Net change in net position - enterprise funds	$ 92.4
Adjustment to the net effect of the current year activity between the internal service funds and the enterprise funds	(4.2)
Change in net position of business-type activities	$ 88.2

See accompanying notes to basic financial statements.

VALLEY WATER

Statement of Cash Flows
Proprietary Funds
For the Year Ended June 30, 2020
(Dollars in Millions)

	Business-type Activities			Governmental Activities
	Water Enterprise Fund	State Water Project Fund	Total Enterprise Funds	Internal Service Funds
Cash flows from operating activities:				
Receipts from customers and users	$ 252.9	$ -	$ 252.9	$ -
Payments to suppliers	(37.1)	(26.3)	(63.4)	(18.9)
Payments to employees	(88.3)	-	(88.3)	(10.1)
Payment for interfund services provided	(11.1)	-	(11.1)	25.7
Net cash provided by (used for) operating activities	116.4	(26.3)	90.1	(3.3)
Cash flows from noncapital financing activities:				
Property taxes received	8.7	22.4	31.1	-
Operating grant	3.7	-	3.7	-
Well permits, refunds and adjustments	1.0	1.4	2.4	0.2
Transfers in from other funds	1.1	-	1.1	-
Net cash provided by noncapital financing activities	14.5	23.8	38.3	0.2
Cash flows from capital and related financing activities:				
COP/revenue bonds issuance/(payment)	(14.4)	-	(14.4)	-
Commercial papers issuance/(payment)	52.7	-	52.7	-
Capital grants	4.3	-	4.3	-
Interest and fiscal agent fees paid	(19.4)	-	(19.4)	-
Payments for contract water rights	(10.0)	-	(10.0)	-
Acquisition and construction of capital assets	(123.6)	-	(123.6)	(2.0)
Transfers in from other funds	-	-	-	4.1
Transfers out to other funds	(2.6)	-	(2.6)	-
Net cash provided by/(used for) capital and related financing activities	(113.0)	-	(113.0)	2.1
Cash flows from investing activities:				
Proceeds from sale of investments	0.1	-	0.1	-
Rental income received	0.1	-	0.1	-
Interest received on cash and investments	8.8	-	8.8	1.3
Net cash provided by/(used for) investing activities	9.0	-	9.0	1.3
Net increase (decrease) in cash and cash equivalents	26.9	(2.5)	24.4	0.3
Cash and cash equivalents, beginning of year	244.3	19.5	263.8	41.3
Cash and cash equivalents, end of year	$ 271.2	$ 17.0	$ 288.2	$ 41.6
Cash and cash equivalents are reported on the Statement of Net Position as follows:				
Cash and investments	$ 271.2	$ 17.0	$ 288.2	$ 41.6
Restricted cash and investments	0.1	-	0.1	-
Less cash and investments not meeting the definition of cash equivalents	(0.1)	-	(0.1)	-
Cash and cash equivalents, end of year	$ 271.2	$ 17.0	$ 288.2	$ 41.6
Reconciliation of operating income (loss) to net cash provided by operating activities:				
Operating income (loss)	$ 86.5	$ (22.7)	$ 63.8	$ (9.3)
Adjustments to reconcile operating income (loss) to net cash provided (used) by operating activities:				
Depreciation, amortization and asset deletion	30.3	0.9	31.2	2.8
Change in operating assets and liabilities:				
(Increase)/decrease in deposits and other assets	2.8	-	2.8	-
(Increase)/decrease in accounts receivable	(13.0)	-	(13.0)	-
(Increase)/decrease in inventory	(1.2)	-	(1.2)	-
Increase/(decrease) in accounts payable	14.7	(4.5)	10.2	1.1
Increase/(decrease) in accrued liabilities	(3.7)	-	(3.7)	-
Increase/(decrease) in deferred revenues	(1.2)	-	(1.2)	-
Increase/(decrease) in compensated absences	0.9	-	0.9	-
Increase/(decrease) in deposits payable	(2.8)	-	(2.8)	-
Increase/(decrease) in claims payable	-	-	-	0.4
Increase/(decrease) in other post employment benefits payable	(6.3)	-	(6.3)	(0.7)
Increase/(decrease) in deferred inflows/outflow of resources	3.4	-	3.4	0.1
Increase/(decrease) in pension liabilities	6.0	-	6.0	2.3
Net cash provided (used) by operating activities	$ 116.4	$ (26.3)	$ 90.1	$ (3.3)
Noncash investing, capital, and financing activity:				
Deletion of capital assets	$ -	$ -	$ -	$ 0.1

See accompanying notes to basic financial statements.

VALLEY WATER

Statement of Assets and Liabilities
Agency Fund
June 30, 2020
(Dollars in Millions)

ASSETS	
Cash and investments (Note 3)	$ 0.2
Total assets	$ 0.2
LIABILITIES	
Deposits payable	$ 0.2
Total liabilities	$ 0.2

See accompanying notes to basic financial statements.

NOTE 1 - THE FINANCIAL REPORTING ENTITY

(a) Description of the Reporting Entity

Valley Water is a special district created by an act of the legislature of the State of California (State) in 1951 and as amended. Valley Water encompasses all of Santa Clara County.

Valley Water is governed by a seven-member Board of Directors (District Board). Each member is elected from equally divided districts drawn through a formal process. The term of office of a director is four years.

On October 12, 2009, Assembly Bill 466 was signed by the Governor of California revising the composition of the board of Valley Water by requiring the board to transition to an all-elected board that, on or after noon on December 3, 2010, consists of seven directors who are elected pursuant to specified requirements. The board also would be required to adopt a resolution establishing boundaries of the seven electoral districts. On May 14, 2010, the Board of Directors adopted a resolution that officially set the boundaries of the seven electoral districts. In November 2010, two directors were elected to represent the new electoral districts constituting a new board of seven members. As required by state law, the Valley Water must redraw its boundaries to reflect 2010 Census results. On October 11, 2011, the Board of Directors adopted Resolution No. 11-63 selecting the Redistricting Plan, known as the Current Adjusted Map.

Valley Water has broad powers relating to all aspects of flood control and storm waters within the District, whether such waters have their sources within Valley Water. It is also authorized to store and distribute water for use within its jurisdictional boundaries and authorized to provide sufficient water for present or future beneficial use of the lands and inhabitants of the District. Valley Water acquires, stores, and distributes water for irrigation, residential, fire protection, municipal, commercial, industrial, and all other uses. Valley Water also directly supports the environment and the community through careful stewardship.

As required by generally accepted accounting principles (GAAP) in the United States of America, the accompanying basic financial statements present Valley Water and its component unit. The component unit discussed below is included in Valley Water's reporting entity because of the significance of its operational and financial relationship with Valley Water.

(b) Blended Component Unit

The Santa Clara Valley Water District Public Facilities Financing Corporation (PFFC) was established on December 16, 1987 for the purpose of providing assistance to Valley Water in financing the acquisition, construction and improvement of public buildings, works and equipment for Valley Water. Although legally separate from Valley Water, the PFFC is reported as if it were part of the primary government because its sole purpose is to provide financing to Valley Water under the debt issuance documents of the district, and its governing board is Valley Water's governing board. The operations of the PFFC are accounted for in the debt service and capital project funds.

Separate financial statements are not issued for the PFFC.

NOTE 2 - SUMMARY OF SIGNIFICANT ACCOUNTING POLICIES

(a) Basis of Presentation

Government-wide Financial Statements

The statement of net position and statement of activities display information about the primary government (Valley Water) and its component unit. These statements include the financial activities of the overall government, except for fiduciary activities. These statements distinguish between the *governmental* and *business-type activities* of Valley Water. Governmental activities, which normally are supported by taxes and inter-governmental revenues, are reported separately from the business-type activity, which rely to a significant extent on fees charged to external parties.

Certain eliminations have been made in regard to interfund activities. All internal balances in the statement of net position have been eliminated except those representing balances between the government activities and business-type activities, which are presented as internal balances and eliminated in the total primary government column. In the statement of activities, internal service fund transactions have been eliminated. However, transactions between the governmental and business-type activities have not been eliminated.

The statement of activities presents a comparison between direct expenses and program revenues for each segment of the business-type activity of Valley Water and for each function of Valley Water's governmental activities. Direct expenses are those that are specifically associated with a program or function and therefore, are clearly identifiable to a particular function. Program revenues include 1) charges paid by the recipients of goods or services offered by the programs and 2) grants and contributions that are restricted to meeting the operational or capital requirements of a particular program. Revenues that are not classified as program revenues, including all taxes, are presented as general revenues.

When both restricted and unrestricted net position is available, restricted resources are used for qualified expenses before any unrestricted resources are spent.

Fund Financial Statements

The fund financial statements provide information about Valley Water's funds, including agency funds and the blended component unit. Separate statements for each fund category – *governmental, proprietary and fiduciary* – are presented.

Valley Water reports the following Governmental Funds:

The *General Fund* is used to account for all revenues and expenditures necessary to carry out basic governmental functions of Valley Water that are not accounted for through other funds.

The *Special Revenue Type Funds* are used to account for specific revenue sources for which expenditures are restricted by law or regulation or committed by board resolutions to finance particular watershed or safe, clean and natural flood protection functions or activities of Valley Water. Valley Water has the following special revenue type funds:

- The *Watershed and Stream Stewardship Fund* is funded by Valley Water's one percent property tax allocation and benefit assessments and used to protect, restore, or enhance the watersheds, streams and natural resources therein. Starting from fiscal year 2009, this fund was redefined to consolidate all watershed stewardship activities from a portion of Valley Water's ad valorem property tax allocation.

  The Watershed and Stream Stewardship Fund includes the following watershed activities that were based on their geographic boundaries (zone funds):

  - The *Lower Peninsula Watershed* is defined by geographic boundaries encompassing the tributaries and watersheds of San Francisquito Creek, Matadero Creek, Barron Creek, Adobe Creek, Stevens Creek, and Permanente Creek. The geographic area includes the Cities of Palo Alto, Los Altos, Mountain View, the Town of Los Altos Hills, and portions of Cupertino.

  - The *West Valley Watershed* is defined by geographic boundaries encompassing the tributaries and watersheds of the Guadalupe Slough, Sunnyvale West Outfall, Sunnyvale East Outfall, Calabazas Creek, San Tomas Aquino Creek, and Saratoga Creek. The geographic area includes portions of the Cities of Sunnyvale, Cupertino, Monte Sereno, San Jose, Santa Clara, Campbell, Saratoga and the Town of Los Gatos.

  - The *Guadalupe Watershed* is defined by geographic boundaries encompassing the tributaries and watersheds of the Guadalupe River. The major tributaries are Los Gatos Creek, Canoas Creek, Ross Creek, Guadalupe Creek, and Alamitos Creek. The geographic area includes portions of the Cities of Santa Clara, San Jose, Campbell, Monte Sereno, and the Town of Los Gatos.

  - The *Coyote Watershed* is defined by geographic boundaries encompassing the tributaries and watersheds of Coyote Creek. The major tributaries are Lower Penitencia Creek, Scott Creek, Berryessa Creek, Upper Penitencia Creek, Silver Creek, Thompson Creek, Fisher Creek, and Packwood Creek. The geographic area includes the City of Milpitas and portions of the Cities of San Jose and Morgan Hill.

- The *Safe, Clean Water & Natural Flood Protection Program* is used to account for the countywide special parcel tax approved by voters on November 6, 2012, with a sunset date of June 30, 2028. (See Note 17 - Subsequent Events regarding November 3, 2020 voter approved renewal.) This program replaces the Clean, Safe Creeks and Natural Flood Protection Plan that was approved by voters in November 2000.

- The *Capital Project Type Funds* are used to account for COP proceeds used for the construction of major capital projects with their respective watersheds. The COP Construction Fund is Valley Water's sole capital project type fund.

- The *Debt Service Type Funds* are used to account for monies being held for reserve requirements and arbitrage rebate for Valley Water's debt payments. The COP Debt Service Fund is Valley Water's sole debt service type fund.

Valley Water reports the following Proprietary Funds:

- The *Water Enterprise Fund* accounts for operations that are financed and operated in a manner similar to private business enterprises where the intent of the governing body is that the costs (including depreciation) of providing goods or services to the general public on a continuing basis be financed or recovered primarily through user charges.

- The *State Water Project Fund* accounts for all revenues and costs associated with the State Water Project.

- The *Internal Service Funds* account for the financing of goods or services provided by one department or agency of Valley Water to other departments or agencies on a cost-reimbursement basis.

    - The *Equipment Fund* accounts for the maintenance and operation of Valley Water's vehicle fleet, heavy construction, and information system equipment.

    - The *Risk Management Fund* accounts for the monies set aside to pay for all claims, judgments, and premium cost.

    - The *Information Technology Fund* accounts for the replacement, operations, and maintenance of district-wide information technology projects.

Valley Water reports *Agency Funds* (Fiduciary Fund type) to account for assets held by Valley Water as an agent for private organizations and/or other governments.

- The *Deposit Fund* is used to account for the collection and payment of funds held in trust for specific purposes.

(b) Basis of Accounting

The government-wide financial statements are reported using the economic resources measurement focus and the accrual basis of accounting. Revenues are recorded when earned and expenses are recorded at the time liabilities are incurred, regardless of when the related cash flows take place. Nonexchange transactions, in which Valley Water gives (or receives) value without directly receiving (or giving) equal value in exchange, include property taxes, benefit assessments and grants. On an accrual basis, revenues from property taxes and benefit assessments are recognized in the fiscal year for which the taxes and assessments are levied; revenue from grants is recognized in the fiscal year in which all eligibility requirements have been satisfied; and revenue from investments is recognized when earned.

Governmental funds are reported using the current financial resources measurement focus and the modified accrual basis of accounting. Under this method, revenues are recognized when measurable and available. Property taxes, benefit assessments, interest, grants and charges for services are accrued when their receipt occurs within sixty days after the end of the accounting period so as to be both measurable and available. Expenditures are generally recorded when a liability is incurred, as under accrual accounting. However, debt service expenditures and compensated absences are recorded when payment is due. Capital assets acquisitions are reported as expenditures in governmental funds. Proceeds of long-term debt and capital leases are reported as other financing sources.

Proprietary funds are reported using the economic resource measurement focus and the accrual basis of accounting and distinguish operating revenues and expenses from non-operating items. Operating revenues and expenses generally result from providing services in connection with a proprietary fund's principal ongoing operations. The principal operating revenues of the Water enterprise fund is the sale of water to outside customers, and of Valley Water's internal service funds are charges for services provided to internal departments. Operating expenses for the enterprise funds and internal service funds include the cost of sales and services, administrative expenses, and depreciation on capital assets. All revenues and expenses not meeting this definition are reported as non-operating revenues and expenses.

Proprietary funds *operating* revenues, such as charges for services, result from the exchange transactions associated with the principal activity of the fund. Exchange transactions are those in which each party receives and gives up essentially equal value. *Non-operating* revenues, such as subsidies and investment earnings, result from nonexchange transactions or ancillary activities.

Agency funds are used to account for assets held by Valley Water in a fiduciary capacity as an agent for individuals, private organizations, other governments and/or other funds. Agency funds do not have a measurement focus but utilizes the accrual basis of accounting for reporting its assets and liabilities.

(c) Cash and Investments

While maintaining safety and liquidity, Valley Water maximizes its investment return by pooling its available cash for investment purposes. Interest earnings are apportioned among funds based upon the average monthly cash balance of each fund and are allocated to each fund on a monthly basis.

Valley Water reported investments in nonparticipating interest earnings contracts (including guaranteed investment contracts) at cost, and all other investments at fair value. The fair value of investments is based on current market prices.

For purposes of the Statement of Cash Flows, the proprietary funds consider all highly liquid investments with a maturity of three months or less when purchased (including restricted investments), and their equity in the cash and investment pool to be cash equivalents.

(d) Inventory

Proprietary fund inventory consists of materials and supplies held for consumption. The cost of all inventory acquired is recorded as an expense at the time of purchase. At the end of the accounting period, the inventory values of materials and supplies on hand are determined using a current cost method which approximates market value. For financial statement purposes, chemical inventories are presented under deposits and other assets.

Starting fiscal year 2020, the Valley Water's Board of Directors decided to record stored water as inventory. Water inventory is listed as a separate line item on the financial statements.

The component of water inventory as of the end of the current fiscal year is shown below. Water inventory is valued based on the rolling average of imported water purchase cost.

	Acre Feet		
Type	Unit Cost	Volume	Total (in millions)
Semitropic ground water bank reserves	$331	344,662	$ 114.1
Local reservoir storage	331	61,462	20.3
Total			$ 134.4

(e) Capital Assets

Capital assets (including infrastructure) are recorded at historical cost or at estimated historical cost if actual historical cost is not available. Contributed capital assets are valued at their estimated acquisition cost on the date contributed. Capital assets of governmental activities include pipelines, channel linings, floodwalls, levees, bridge flood proofing, box culverts and re-vegetation. Valley Water defines capital assets as assets with an initial, individual cost of more than $5,000 and an estimated useful life in excess of one year. Capital assets including assets under capital leases used in operations are depreciated or amortized using the straight-line method over the lesser of the capital lease period or their estimated useful lives in the government-wide statements and proprietary funds.

The estimated useful lives are as follows:

Water treatment facilities	50 Years
Buildings, structures, and trailers	25 - 50 Years
Flood control projects	30 - 100 Years
Dams, structures, and improvements	80 Years
Office furniture, fixtures, and equipment	5 - 20 Years
Automobiles and trucks	6 - 12 Years
Computer equipment	5 Years

Maintenance and repairs are charged to operations when incurred. Betterments and major improvements which significantly increase values, change capacities or extend useful lives are capitalized. Upon sale or retirement of capital assets, the cost and related accumulated depreciation are removed from the respective accounts and any resulting gain or loss is included in the results of operations.

(f) Amortization of Contract Water Rights

Valley Water has contracted with the State of California for water deliveries from the State Water Project through calendar year 2035. A portion of the payments under this contract represent reimbursement of capital costs for transportation facilities (the capital cost component). The Water Enterprise Fund capitalizes the capital cost component and amortizes such component, using the straight-line method, over the remaining entitlement period.

(g) Amortization of Water Banking Rights

Valley Water has contracted with the Semitropic Water Storage District and its Improvement Districts for the water banking and exchange program. The program is in effect through calendar

year 2035. Participation in the program provides Valley Water a 35% allocation for storage rights at the Semitropic Water Storage District facility, totaling 350,000 acre-feet. The Water Enterprise Fund has capitalized the cost of the program and amortizes its cost over the 40-year entitlement period using the straight-line method.

(h) Amortization of Water Delivery Rights

Valley Water has contracted with the United States Department of the Interior Bureau of Reclamation for water deliveries from Central Valley through calendar year 2027. A portion of this contract represents reimbursement of capital costs for general construction in the San Felipe Division facilities. The Water Enterprise Fund capitalizes the capital cost component and amortizes such component, using the straight-line method, over the remaining entitlement period.

(i) Receivables

Receivables include amounts due from water utility customers, as well as from other miscellaneous revenue sources. All receivables are shown net of an allowance for doubtful accounts. For the current fiscal year, the allowance balance was $5.9 million. At the end of every fiscal year, a review of outstanding receivables results in the recalculation of the bad debt allowance where delinquent balances greater than 3 years are assigned a weight of 75%, up to 3 years a weight of 50%, up to 2 years a weight of 20%, and up to 1 year a weight of 5%. The totals of each of these amounts are then combined to determine the fiscal year's ending bad debt allowance.

(j) Accrued Vacation and Sick Leave Pay

It is the policy of Valley Water to permit employees to accumulate earned but unused vacation and sick leave benefits. Vested or accumulated vacation and sick leave are reported as noncurrent liabilities on the statement of net position.

Maximum vacation accruals may not exceed three times the employee's annual accrual rate, per employee. All regular full-time employees are eligible for twelve (12) days of sick leave per fiscal year. Unused sick leave may be carried forward to the following fiscal year without limitation. Upon retirement, up to 480 hours of accrued sick leave shall be paid to the eligible employee at the rate of 50% of the equivalent cash value. Upon resignation with ten or more years of service, or upon separation by layoff regardless of service, up to 480 hours of accrued sick leave shall be paid off at the rate of 25% of the cash value.

(k) Bond Premiums, Discounts and Issuance Costs

Water Enterprise and Watershed debt premiums and discounts are deferred and amortized over the life of the bonds. Bonds payable are reported net of the applicable bond discounts. Refunding differences associated with debt refinancing are reported as deferred outflows or inflows of resources and amortized over the life of the bonds. Issuance costs are recorded as an expense of the current period.

On the statement of net position and the statement of activities, the premiums and discounts related to outstanding debt are deferred and amortized over the life of the debt. Debt payable are reported net of the applicable bond premiums or discounts. Prepaid insurance associated with the issuance of debts are reported as prepaid expenses.

(l) Accounting for Encumbrances

Valley Water employs encumbrance accounting as a significant aspect of budgetary control. Under encumbrance accounting, purchase orders, contracts and other commitments for expenditure of funds are recorded as assignment of fund balance since they are not treated as current expenditures or outstanding liabilities at year end for GAAP financial reporting.

(m) Net position

Valley Water's fund net position is classified based primarily to the extent to which Valley Water is bound to observe constraints imposed upon the use of the resources. When both restricted and unrestricted resources are available for expenses, Valley Water expends the restricted funds and then the unrestricted funds.

(n) Estimates

The preparation of the basic financial statements in conformity with GAAP requires management to make estimates and assumptions that affect certain reported amounts and disclosures. Accordingly, actual results could differ from those estimates.

(o) Pensions

For purposes of measuring the net pension liability and deferred outflows/inflows of resources related to pensions, and pension expense, information about the fiduciary net position of Valley Water's California Public Employees' Retirement System (CalPERS) plans (Plans) and additions to/deductions from the Plans' fiduciary net position have been determined on the same basis as they are reported by CalPERS. For this purpose, benefit payments (including refunds of employee contributions) are recognized when due and payable in accordance with the benefit terms. Investments are reported at fair value.

Generally accepted accounting principles require that the reported results must pertain to liability and asset information within certain defined timeframes. For this report, the following timeframes are used:

Valuation Date	June 30, 2018
Measurement Date	June 30, 2019

(p) Other Post-Employment Benefits (OPEB)

For purposes of measuring the net OPEB liability, deferred outflows/inflows of resources related to OPEB, and OPEB expense, information about the fiduciary net position of Valley Water's plan (OPEB Plan) and additions to/deductions from the OPEB's Plan's fiduciary net position have been determined on the same basis as reported by CalPERS. For this purpose, benefit payments are recognized when due and payable in accordance with the benefit terms. Investments are reported at fair value.

Generally accepted accounting principles require that the reported results must pertain to liability and asset information within certain defined timeframes. For this report, the following timeframes are used:

Valuation Date	June 30, 2019
Measurement Date	June 30, 2019

(q) Fair Value Measurement

Valley Water has applied Governmental Accounting Standards Board ("GASB") Statement No. 72, Fair Value Measurement and Application. GASB Statement No. 72 provides guidance for determining a fair value measurement for reporting purposes and applying fair value to certain investments and disclosures related to all fair value measurements. Valley Water categorizes the fair value measurements of its investments based on the hierarchy established by generally accepted accounting principles. The fair value hierarchy, which has three levels, is based on the valuation inputs used to measure an asset's fair value: Level 1 inputs are quoted prices in active markets for identical assets; Level 2 inputs are observable inputs (other than quoted marked prices) using matrix pricing based on the securities relationship to benchmark quoted prices; and Level 3 inputs are significant unobservable inputs.

(r) Deferred Outflows and Inflows of Resources

In addition to assets, the statement of financial position will sometimes report a separate section for deferred outflows of resources. Deferred outflows of resources represent a consumption of net position that applies to future period(s) and so will not be recognized as an outflow of resources (expense) until then.

In addition to liabilities, the statement of financial position will sometimes report a separate section for deferred inflows. Deferred inflows of resources represent an acquisition of net position that applies to future period(s) and so will not be recognized as an inflow of resources (revenue) until that time.

(s) New Pronouncements

The Governmental Accounting Standards Board (GASB) releases new accounting and financial reporting standards which may have a significant impact on Valley Water's financial reporting process. Current and future new standards which may impact Valley Water include the following:

Current Accounting Pronouncements:

GASB Statement No. 84 – In January 2017, GASB issued Statement No. 84, *Fiduciary Activities.* The objective of this Statement is to improve guidance regarding the identification of fiduciary activities for accounting and financial reporting purposes and how those activities should be reported. The requirements of this Statement are effective for reporting periods beginning after December 15, 2018, or fiscal year 2020. Valley Water has implemented this GASB standard.

GASB Statement No. 90 – In August 2018, GASB issued Statement No. 90, *Majority Equity Interest, an amendment of GASB statement No. 14 and No. 61*. The objective of this Statement is to improve how majority equity interest is reported. The Statement specifies that a majority equity interest in a legally separate organization should be reported as an investment using the equity method if a government's holding of the equity interest meets the definition of an investment and

for all other holdings of a majority equity interest in a legally separate organization, a government should report the legally separate organization as a component unit. The requirements of this Statement are effective for reporting periods beginning after December 15, 2018, or fiscal year 2020. This pronouncement is not applicable to Valley Water.

Future Accounting Pronouncements:

GASB Statement No. 87 – In June 2017, GASB issued Statement No. 87, *Leases*. The objective of this Statement is to better meet the information needs of financial statement users by improving accounting and financial reporting for leases by governments. This Statement increases the usefulness of governments' financial statements by requiring recognition of certain lease assets and liabilities for leases that previously were classified as operating leases and recognized as inflows of resources or outflows of resources based on the payment provisions of the contract. It establishes a single model for lease accounting based on the foundational principle that leases are financings of the right to use an underlying asset. Under this Statement, a lessee is required to recognize a lease liability and an intangible right-to-use lease asset, and a lessor is required to recognize a lease receivable and a deferred inflow of resources, thereby enhancing the relevance and consistency of information about governments' leasing activities. The Statement is effective for the reporting periods beginning after December 15, 2019, or fiscal year 2021. Valley Water has not determined the impact of this pronouncement on the financial statements.

GASB Statement No. 89 – In June 2018, GASB issued Statement No. 89, *Accounting for Interest Cost Incurred Before the End of a Construction Period.* The objective of this Statement is to enhance the relevance and comparability of information about capital assets and the cost of borrowing for a reporting period and (b) to simplify accounting for certain interest costs. This Statement requires that interest cost incurred before the end of a construction period be recognized as an expense in the period in which the cost is incurred for financial statements prepared using the economic resources measurement focus. As a result, interest cost incurred before the end of a construction period will not be included in the historical cost of a capital asset reported in the financial statements. The requirements of this Statement are effective for reporting periods beginning after December 15, 2019, or fiscal year 2021. Valley Water has not determined the impact of this pronouncement on the financial statements.

GASB Statement No. 91 – In May 2019, GASB issued Statement No. 91, *Conduit Debt Obligations*. The objective of this Statement is to provide a single method of reporting conduit debt obligations by issuers and eliminate diversity in practice associated with (1) commitments extended by issuers, (2) arrangements associated with conduit debt obligations, and (3) related note disclosures. This Statement achieves those objectives by clarifying the existing definition of a conduit debt obligation; establishing that a conduit debt obligation is not a liability of the issuer; establishing standards for accounting and financial reporting of additional commitments and voluntary commitments extended by issuers and arrangements associated with conduit debt obligations; and improving required note disclosures. This Statement requires issuers to disclose general information about their conduit debt obligations, organized by type of commitment, including the aggregate outstanding principal amount of the issuers' conduit debt obligations and a description of each type of commitment. Issuers that recognize liabilities related to supporting the debt service of conduit debt obligations also should disclose information about the amount recognized and how the liabilities changed during the reporting period. The requirements of this Statement are effective for reporting periods beginning after December 15, 2020, or fiscal year 2022. Valley Water has not determined the impact of this pronouncement on the financial statements.

NOTE 3 - CASH AND INVESTMENTS

Total Valley Water cash and investments reported on the financial statements at June 30, 2020 are as follows (in millions):

Statement of Net Position:	
Cash and investments	$ 716.0
Restricted cash and investments	5.6
Statement of Fiduciary Net Position:	
Cash and investments	0.2
	$ 721.8

Investments

At June 30, 2020, cash and investments based on fair value consist of the following (in millions):

U.S. Government Agencies	$ 300.7
U.S. Treasury Obligations	25.9
Medium Term Notes	18.6
Local Agency Investment Fund	75.0
Mutual Funds	0.1
Supranational Obligations	10.3
Municipal Bonds	65.5
Negotiable Certificates of Deposit	1.2
Time Certificates of Deposit	172.5
Money Market Funds	47.7
Total Investments	$ 717.5
Carrying amount of cash	4.3
Total Cash and Investments	$ 721.8

As of June 30, 2020, the fair value of Valley Water's investment in the State investment pool (LAIF) was $75.0 million in non-restricted cash. The Local Investment Advisory Board (Board) has oversight responsibility for LAIF. The Board consists of five members as designated by State Statute. Valley Water is a voluntary participant in the pool. The value of the pool shares in LAIF, which may be withdrawn, is determined on an amortized cost basis, which is different than the fair value of Valley Water's position in LAIF. The pool is not registered with the Securities Exchange Commission.

Authorized Investments by Valley Water

Valley Water's Investment Policy and the California Government Code allow Valley Water to invest in the following types of investments, provided the credit ratings of the issuers are acceptable to Valley Water. The following items also identify certain provisions of Valley Water and California Government Code that address interest rate risk, credit risk, and concentration of credit risk. This list does not address Valley Water's investments of debt proceeds held by fiscal agents that are governed by the provisions of debt agreements of Valley Water, rather than the general provisions of the California Government Code or Valley Water's investment policy, when more restrictive.

Authorized Investment Type	Maximum Maturity	Minimum Credit Quality	Maximum Percentage of Portfolio	Maximum Investment in One Issuer
U.S. Treasury Obligations	5 years	(Exempt from disclosure)	None	None
U.S. Government Agency Issues (A)	5 years	(Exempt from disclosure)	None	None
Bankers Acceptances	180 days	AA-	40%	4.8%
Commercial Paper	90 days	AA-	15%	1.8%
Negotiable Certificates of Deposit	5 years	AA-	30%	3.6%
Time Certificates of Deposit (B)	5 years	Satisfactory CRA	5%	$250,000 & FDIC Membership
Collateralized Repurchase Agreements	30 days	AA-	None	None
Medium Term Notes	5 years	AA-	15%	1.8%
Municipal Obligations	5 years	AA-	15%	1.8%
California Local Agency Investment Fund (C)	N/A	N/A	(B)	(B)
Mutual Funds	N/A	AAA	10%	- -
Supranational Obligations	5 years	AA	15%	1.8%

(A) Securities issued by agencies of the federal government such as the Federal Farm Credit Bank (FFCB), the Federal Home Loan Bank (FHLB), the Federal National Mortgage Association (FNMA), the Federal Home Loan Mortgage Corporation (FHLMC), the Federal Agricultural Mortgage Corporation of America and the Tennessee Valley Authority.

(B) Valley Water Board of Directors approved investments in California based local banks with a threshold of a minimum of 4% invested in banks with up to $10 billion in assets and 1% in banks with up to $2 billion in assets for a limit of 5 years in the form of collateralized deposits, FDIC/NCUA insured CDs, CDARS, or any legally allowable deposits.

(C) LAIF will accept no more than $75 million of an agency's unrestricted funds while placing no constraints on funds relating to unspent bond proceeds.

Restricted Cash and Investments for Bond Interest and Redemption

Under the provisions of Valley Water's revenue bond resolutions and Installment Purchase Agreement for the 2012A, 2016C, 2016D, and 2017A Certificates of Participations (COPs) and Water Utility Revenue and Refunding Bonds 2006B, 2016A, 2016B, 2017A, 2019A, 2019B and 2019C, a portion of the proceeds from these debt issuances is required to be held in custody accounts by a fiscal agent as trustee.

As of June 30, 2020, the amount invested in assets held by fiscal agent amounted to $5.4 million and was equal to or in excess of the amount required at that date.

Restricted Cash and Investments for Capital Projects

Valley Water, through the PFFC, has also issued commercial paper to provide for any Valley Water purposes, including but not limited to, capital expenditure, investment and reinvestment, and the discharge of any obligation or indebtedness of Valley Water. At June 30, 2020, the total balance of the taxable and the tax-exempt commercial paper certificate accounts held by fiscal agent is $0.1 million. Both account balances were cash transfers from Valley Water to fiscal agent to fund maturing interest payments on commercial papers outstanding.

Restricted Cash and Investments for Watershed Management Projects

Valley Water has entered into certain cost sharing agreements with the U.S. Army Corps of Engineers (the Corps). Under these agreements, Valley Water is required to deposit monies into escrow accounts to be used by the Corps for watershed management projects. At June 30, 2020, Valley Water's restricted deposits held in escrow for construction of the Guadalupe Watershed project amounted to $0.1 million.

Authorized Investments by Debt Agreements

Valley Water must maintain required amounts of cash and investments with trustees or fiscal agents under the terms of certain debt issues. These funds are unexpended bond proceeds or are pledged reserves to be used if Valley Water fails to meet its obligations under these debt issues. The California Government Code requires these funds to be invested in instruments which, at the time of such investment, are legal investments under the laws of the State of California, Valley Water ordinances, policies, and bond indentures. The following identifies the investment types that are authorized for investments held by fiscal agents. The table also identifies certain provisions of these debt agreements:

Authorized Investment Type	Maximum Maturity	Minimum Credit Quality
U.S. Treasury Obligations (A)	N/A	N/A
U.S. Agency Securities (B)	N/A	N/A
State Obligations (C)	N/A	A
Commercial Paper	270 days	A1
Unsecured CD's, deposit accounts, time deposits, and bankers acceptances	365 days	A-1
FDIC Insured Deposit (D)	N/A	N/A
Money Market Funds	N/A	AAA
Collateralized Repurchase Agreements (E)	N/A	A-1
Investment Agreements (F)	N/A	AA-
Investment Approved in Writing by the Certificate Insurer (G)	N/A	N/A
Local Agency Investment Fund of the State of CA	N/A	N/A
Supranational Obligations	N/A	AA

(A) Direct obligations of the United States of America and securities fully and unconditionally guaranteed as to the timely payment of principal and interest by the United States of America,

provided that the full faith and credit of the United States of America must be pledged to any such direct obligation or guarantee.

(B) Direct obligations and fully guaranteed certificates of beneficial interest of the Export-Import Bank of the United States; consolidated debt obligations and letter of credit-backed issues of the Federal Home Loan Banks; participation certificates and senior debt obligations of the Federal Home Loan Mortgage Corporation ("FHLMCs"); debentures of the Federal Housing Administration; mortgage-backed securities (except stripped mortgage securities which are valued greater than par on the portion of unpaid principal) and senior debt obligations of the Federal National Mortgage Association ("FNMAs"); participation certificates of the General Services Administration; guaranteed mortgage-backed securities and guaranteed participation certificates of the Government National Mortgage Association ("GNMAs"); guaranteed participation certificates and guaranteed pool certificates of the Small Business Administration; local authority Certificates of the U.S. Department of Housing & Urban Development; guaranteed Title XI financings of the U.S. Maritime Administration; guaranteed transit Certificates of the Washington Metropolitan Area Transit Authority; Resolution Funding Corporation securities.

(C) Direct obligations of any state of the United States of America or any subdivision or agency thereof whose unsecured, uninsured and unguaranteed general obligation debt is rated, at the time of purchase, "A" or better by Moody's and "A" or better by S&P.

(D) Deposits of any bank or savings and loan association which has combined capital, surplus and undivided profits of not less than $3.0 million, provided such deposits are continuously and fully insured by the Bank Insurance Fund or the Savings Association Insurance Fund of the Federal Deposit Insurance Corporation.

(E) Repurchase agreements collateralized by Direct Obligations, GNMAs, FNMAs or FHLMCs with any registered broker/dealer subject to the Securities Investors' Protection Corporation jurisdiction or any commercial bank insured by the FDIC, if such broker/dealer or bank has an uninsured, unsecured and unguaranteed obligation rated "P-1" or"A3" or better by Moody's and "A-1" or "A-" or better by S&P, provided: (1) a master repurchase agreement or specific written repurchase agreement governs the transaction; and (2) the securities are held free and clear of any lien by the Trustee or an independent third party acting solely as agent ("Agent") for the Trustee, and such third party is (i) a Federal Reserve Bank, or (ii) a bank which is a member of the Federal Deposit Insurance Corporation and which has combined capital, surplus and undivided profits of not less than $50.0 million or (iii) a bank approved in writing for such purpose by the Certificate Insurer, and the Trustee shall have received written confirmation from such third party that it holds such securities, free and clear of any lien, as agent for the Trustee; and (3) a perfected first security interest under the Uniform Commercial Code, or book entry procedures prescribed at 31 C.F.R. 306.1 et seq. or 31 C.F.R. 350.0 et seq. if such securities is created for the benefit of the Trustee; and (4) the repurchase agreement has a term of 180 days or less, and the Trustee or the agent will value the collateral securities no less frequently than weekly and will liquidate the collateral securities if any deficiency in the required collateral percentage is not restored within two business days of such valuation; and (5) the fair value of the securities in relation to the amount of the repurchase obligation, including principal and interest, is equal to at least 103%.

(F) Investment agreements, guaranteed investment contracts, funding agreement, or any other form of corporate note representing the unconditional obligations of entities or agencies

with the unsecured long-term debt obligations or claims-paying ability rated in one of the top two rating categories by Moody's and S&P.

(G) Any investment approved in writing by the Certificate Insurer.

Interest Rate Risk

Interest Rate Risk is the risk that changes in market interest rates will adversely affect the fair value of an investment. Generally, the longer the maturity of an investment, the greater the sensitivity of its fair value to changes in market interest rates. Valley Water generally manages its own interest rate risk by holding investments to maturity.

Information about the sensitivity of the fair value of Valley Water's investments to market interest rate fluctuations, summarized by the following table, shows the distribution to Valley Water's investments by maturity or earliest call date (in millions).

	Total	12 Months or less	13 to 24 Months	25 to 60 Months
U.S. Government Agencies	$ 238.9	$ 65.1	$ 57.9	$ 115.9
U.S. Government Agencies - Callable	61.8	-	-	61.8
U.S. Treasury Obligations	25.9	8.1	9.3	8.5
Medium Term Notes	6.1	3.0	-	3.1
Medium Term Notes - Callable	12.4	2.0	3.1	7.3
Local Agency Investment Fund	75.0	75.0	-	-
Mutual Funds	0.1	0.1	-	-
Supranational Obligations	10.4	7.1	-	3.3
Municipal Bonds	64.1	9.2	7.8	47.1
Municipal Bonds - Callable	1.5	-	-	1.5
Negotiable Certificates of Deposit	1.2	0.7	-	0.5
Time Certificates of Deposit	172.4	172.4	-	-
Money Market Funds	47.7	47.7	-	-
Total Investments	$ 717.5	$ 390.4	$ 78.1	$ 249.0

Credit Risk

Credit Risk is the risk that an issuer of an investment will not fulfill its obligation to the holder of the investment. This is measured by the assignment of a rating by a nationally recognized statistical rating organization.

The ensuing table shows the minimum rating required by the California Government Code, Valley Water's investment policy, or debt agreements and the actual rating as of June 30, 2020 for each investment type as provided by Standard and Poor's (in millions).

	Total	Minimum Legal Rating	Exempt from Disclosure	Rating as of Year-end AAA	AA+	AA	AA-	Not Rated
U.S. Government Agencies	$ 300.7	AA-	$ -	$ -	$ 259.8	$ -	$ -	$ 40.9
U.S. Treasury Obligations	25.9	AA-	25.9	-	-	-	-	-
Medium Term Notes	18.6	AA-	-	10.3	5.2	-	-	3.1
Local Agency Investment Fund	75.0	N/A	-	-	-	-	-	75.0
Mutual Funds	0.1	AAA	-	0.1	-	-	-	-
Supranational Obligations	10.4	AA	-	10.4	-	-	-	-
Municipal Bonds	65.5	AA-	-	9.2	22.0	31.1	3.2	-
Negotiable Certificates of Deposit	1.2	AA-	-	-	-	-	-	1.2
Time Certificates of Deposit	172.4	N/A	-	-	-	-	-	172.4
Money Market Funds	47.7	N/A	-	-	-	-	-	47.7
Total Investments	$ 717.5		$ 25.9	$ 30.0	$ 287.0	$ 31.1	$ 3.2	$ 340.3

Concentration of Credit Risk

Valley Water's investment policy regarding the amount that can be invested in any one issuer is stipulated by the California Government Code and Valley Water's investment policy, whichever is more restrictive. However, Valley Water is required to disclose investments that represent a concentration of five percent or more of investments in any one issuer, held by individual Valley Water Funds in the securities of issuers other than U.S. Treasury securities, mutual funds and external investments pools. At June 30, 2020, those investments consisted of the following (in millions):

Issuer	Investment Type	Reported Amount
Government-Wide		
Federal Home Loan Bank	U.S. Government Agency	$ 105.6
Federal Farm Credit Bank	U.S. Government Agency	107.9
Federal Home Loan Mortgage Corp.	U.S. Government Agency	40.9
Federal National Mortgage Association	U.S. Government Agency	42.3

Custodial Credit Risk

Custodial credit risk for deposits is the risk that, in the event of the failure of a depository financial institution, Valley Water will not be able to recover its deposits or will not be able to recover collateral securities that are in the possession of an outside party.

Custodial credit risk for investments is the risk that, in the event of the failure of the counterparty (e.g., broker-dealer) to a transaction, a government will not be able to recover the value of its investment or collateral securities that are in the possession of another party.

Under California Government Code Section 53651, depending on specific types of eligible securities, a bank must deposit eligible securities posted as collateral with its Agent having a fair value of 105% to 150% of public agencies' cash on deposit. All of Valley Water's deposits are either insured by the Federal Depository Insurance Corporation (FDIC) or collateralized with pledged securities held in the trust department of the financial institutions but not in Valley Water's name.

Fair Value Measurement and Application

Valley Water measures and records its investments using fair value measurement guidelines established by generally accepted accounting principles. These guidelines recognize a three-tiered fair value hierarchy as shown below:

- Level 1: Quoted prices for identical investments in active markets;
- Level 2: Observable inputs (other than quoted marked prices) using matrix pricing based on the securities relationship to benchmark quoted prices; and
- Level 3: Unobservable inputs (not applicable to Valley Water).

Shown below is a summary of the fair value hierarchy of Valley Water's investment at fair value on June 30, 2020 (in millions):

	6/30/2020	Level 1	Level 2	Uncategorized
Investments by Fair Value Level				
U.S. Government Agencies	$ 300.7	$ 300.7	$ -	$ -
U.S. Treasury Obligations	25.9	25.9	-	-
Medium Term Notes	18.6	-	18.6	-
Mutual Funds	0.1	-	0.1	-
Supranational Obligations	10.4	-	10.4	-
Municipal Bonds	65.5	-	65.5	-
Negotiable Certificates of Deposit	1.2	-	1.2	-
Time Certificates of Deposit	172.4	-	172.4	-
Subtotal - Leveled Investments	594.8	326.6	268.2	-
Local Agency Investment Fund	75.0	-	-	75.0
Money Market Funds	47.7	-	-	47.7
Subtotal - Uncategorized	122.7	-	-	122.7
Total Investments	$ 717.5	$ 326.6	$ 268.2	$ 122.7

Deposits and withdrawals in the State Investment Pool are made on the basis of $1 and are not using fair value. Accordingly, Valley Water's investments of $75.0 million in LAIF at June 30, 2020 are classified as uncategorized input (not classified as Level 1, Level 2, or Level 3).

NOTE 4 - REIMBURSEMENT OF CAPITAL COSTS

Valley Water derives certain revenues from reimbursements of capital costs by local, state, federal agencies and other outside sources. The table on the next page shows a summary of such reimbursements during fiscal year 2020 (in millions).

Reimbursement of Capital Costs
(In Millions)

	Governmental Funds	Proprietary Funds
Local Agencies:		
City of Gilroy	$ 0.2	$ -
City of Mountain View	0.1	-
City of Palo Alto	0.2	-
San Benito County Water District	-	0.3
San Francisco Bay Restoration Authority	14.7	-
State Agency:		
Department of Water Resources	11.3	2.8
California Water Commission	-	0.7
Federal Agency		
US Department of Agriculture	3.0	-
Other		
Apple	-	0.5
Total	$ 29.5	$ 4.3

NOTE 5 - INVESTMENT INCOME

Valley Water earns interest income from the investment of cash. Generally accepted accounting principles, as discussed in GASB 31, require reporting investment at fair value in the financial statements. Because of this requirement, interest income earned from investing activity during the current fiscal year is adjusted upwards or downwards to reflect the change in fair value of investment.

The following table represents the investment income as reported in the financial statements, the current year GASB 31 fair value adjustment, and the unadjusted interest income at June 30, 2020 (in millions).

	Interest as Reported	GASB 31 Fair Value Adjustment	Unadjusted Interest Income
Fund:			
General	$ 0.5	$ 0.1	$ 0.4
Watershed & Stream Stewardship	5.2	2.1	3.1
Safe, Clean Water	5.8	2.2	3.6
COP Construction	0.1	-	0.1
Water Enterprise	8.8	3.3	5.5
Internal Service			
Equipment	0.2	0.1	0.1
Risk Insurance	0.5	0.2	0.3
Information Technology	0.6	0.2	0.4
Total Interest	$ 21.7	$ 8.2	$ 13.5

NOTE 6 - CAPITAL ASSETS

Capital assets activity for the year ended June 30, 2020 was as follows (in millions):

	Balance July 1, 2019	Additions	Deletions	Transfers / Adjustments	Balance June 30, 2020
Governmental Activities					
Nondepreciable capital assets:					
Land	$ 191.7	$ -	$ -	$ -	$ 191.7
Intangibles - easement	27.4	-	-	-	27.4
Construction in progress					
Governmental funds	596.1	89.9	-	(17.9)	668.1
Internal service funds	2.1	0.3	-	(2.4)	-
Total nondepreciable capital assets	817.3	90.2	-	(20.3)	887.2
Depreciable capital assets:					
Buildings	42.0	-	-	-	42.0
Structures and improvements	784.0	-	(29.3)	17.9	772.6
Equipment:					
Governmental funds	21.6	-	-	-	21.6
Internal service funds	28.8	1.9	(0.1)	0.8	31.4
Intangible Software	2.6	-	-	1.7	4.3
Total depreciable capital assets	879.0	1.9	(29.4)	20.4	871.9
Less accumulated depreciation and amortization					
Buildings	(15.3)	(0.8)	-	-	(16.1)
Structures and improvements	(137.3)	(9.3)	-	-	(146.6)
Equipment:					
Governmental funds	(19.7)	(0.5)	-	-	(20.2)
Internal service funds	(17.3)	(2.6)	0.1	-	(19.8)
Intangible - software	(2.1)	(0.5)	-	-	(2.6)
Total accumulated depreciation and amortization	(191.7)	(13.7)	0.1	-	(205.3)
Net depreciable capital assets	687.3	(11.8)	(29.3)	20.4	666.6
Total capital assets, net	$ 1,504.6	$ 78.4	$ (29.3)	$ 0.1	$ 1,553.8
Business-type activity					
Nondepreciable capital assets:					
Land	$ 19.2	$ 0.8	$ -	$ -	$ 20.0
Intangible - easement and software	0.2	-	-	-	0.2
Construction in progress	399.6	122.2	-	(28.0)	493.8
Total nondepreciable capital assets	419.0	123.0	-	(28.0)	514.0
Depreciable capital assets:					
Contract water and storage rights	216.6	10.0	-	-	226.6
Buildings	91.0	-	-	6.2	97.2
Structures and improvements	918.7	-	-	20.8	939.5
Equipment	28.3	0.6	-	1.0	29.9
Total depreciable capital assets	1,254.6	10.6	-	28.0	1,293.2
Less accumulated depreciation and amortization					
Contract water and storage rights	(175.7)	(12.4)	-	-	(188.1)
Buildings	(10.2)	(2.1)	-	-	(12.3)
Structures and improvements	(300.3)	(15.5)	-	-	(315.8)
Equipment	(23.5)	(1.2)	-	-	(24.7)
Total accumulated depreciation and amortization	(509.7)	(31.2)	-	-	(540.9)
Net depreciable capital assets	744.9	(20.6)	-	28.0	752.3
Total capital assets, net	$ 1,163.9	$ 102.4	$ -	$ -	$ 1,266.3

During fiscal year 2020, addition to construction in progress for the current fiscal year was $90.3 million in the government-wide activities. The breakdown of additions to the construction in progress was as follows: $16.9 million to the watersheds, $73.1 million to the Safe, Clean Water & Natural Flood Protection Fund, and $0.3 million in the internal service funds. There were 68 in progress and completed projects during the fiscal year with the major projects listed below (in millions):

- $35.9 - Upper Llagas Creek
- $13.7 - Permanente Creek
- $11.7 - San Francisco Bay Shoreline EIA Design and Part Construction
- $6.3 - San Francisco Bay Shoreline
- $4.4 - Berryessa Creek, Lower, Penitencia Phase 2
- $1.5 - San Francisquito Creek
- $1.5 - Coyote Creek, Montague to I-280
- $1.4 - Almaden Lake Improvement
- $1.3 - Lower Penitencia Creek Improvements
- $1.2 - Cunningham Flood Detention
- $1.2 - Salt Ponds A5-11 Restoration
- $1.1 - Main/Madrone Pipeline Restoration
- $1.1 - Palo Alto Flood Basin Tide Gate Improvements
- $1.0 - Sunnyvale East and West Channel

New construction in progress amounted to $122.2 million in the business-type activities. There were 50 in progress and completed projects during the fiscal year, with major projects listed below (in millions):

- $59.6 - Rinconada Water Treatment Plant Reliability Improvement
- $19.0 - 10-year Pipeline and Rehabilitation
- $17.3 - Pacheco Reservoir Expansion Project
- $11.6 - Anderson Dam Seismic Retrofit
- $6.3 - Coyote Pumping Plant Warehouse
- $3.1 - Rinconada Water Treatment Plant Residuals Remediation
- $1.0 - Dam Safety Seismic Stability

Capital asset depreciation and amortization incurred by the primary government for the current fiscal year are as follows (in millions):

General government	$ 1.6
Watershed and Stream Stewardship	8.6
Safe, clean water and natural flood protection	0.7
Capital assets held by Valley Water's internal service funds are charged to the various functions based on their usage of assets.	2.8
Total depreciation expense – governmental activities	$ 13.7
Total depreciation and amortization expense – business-type activity	
Water cost of production	$ 31.2

NOTE 7 - SHORT-TERM AND LONG-TERM LIABILITIES

(a) Short-term debt

On December 17, 2002, the Valley Water Board authorized a commercial paper program, through the PFFC. The commercial paper program allows Valley Water to finance capital acquisitions while taking advantage of short-term rates, and Valley Water issues tax and revenue anticipation notes on an annual basis to secure the commercial paper program. This program is used in conjunction with issuing long-term liabilities to obtain the least expensive financing for Valley Water.

On May 15, 2012, the Valley Water Board authorized the execution and delivery of certain agreements in connection with the commercial paper program in an aggregate principal amount not to exceed $100.0 million.

On January 13, 2015, the Valley Water Board took certain actions to support an increase in the commercial paper program to $150.0 million. The proceeds of the commercial paper may be used for any Valley Water purposes, including but not limited to, capital expenditure, investment and reinvestment, and the discharge of any obligation or indebtedness of Valley Water.

On April 22, 2020, Valley Water issued $17.7 million of Tax Exempt and $25.0 million of Taxable commercial paper to reimburse Water Utility capital project costs incurred between May 2019 and February 2020. On June 25, 2020, Valley Water issued $10.0 million of Taxable commercial paper to prefund Water Utility costs incurred in March 2020 and in the future.

As of June 30, 2020, outstanding commercial paper was $102.7 million, consisting of $30.0 million issued through the PFFC for the benefit of the Safe, Clean Water Program and $72.7 million issued through the PFFC for the benefit of the Water Utility Enterprise.

Commercial paper activity for the year ended June 30, 2020 was as follows (in millions):

Commercial Paper Program	Authorized	Outstanding Amount
Beginning balance	$ 150.0	$ 50.0
Additions	-	52.7
Ending balance	$ 150.0	$ 102.7

(b) Long-term liabilities

Valley Water's long-term liabilities outstanding consisted of the following (in millions):

Type of indebtedness	Maturity	All-in True Interest Cost*	Authorized and Issued	June 30, 2020	Due Within One Year
Governmental activities					
Certificates of participation (COP)					
2012A COP	2024	1.41%	$ 52.9	$ 19.2	$ 4.5
2017A COP	2030	2.56%	59.4	46.3	4.0
Compensated absences				10.3	2.4
Claims payable				7.5	2.1
Net pension liability				134.3	-
Other post employment liability				33.0	-
Bond premium				9.9	1.4
Total general long-term obligations				$ 260.5	$ 14.4
Business-type activity					
2006B Water revenue bond	2035	5.39%	$ 25.6	$ 17.3	$ 0.9
2016A Water revenue bond	2046	3.25%	106.3	106.3	-
2016B Water revenue bond	2046	4.32%	75.2	75.2	-
2017A Water revenue bond	2037	3.13%	54.7	49.6	1.9
2019A Water revenue bond	2039	3.75%	15.2	15.0	0.2
2019B Water revenue bond	2034	3.81%	80.0	78.4	1.7
2019C Water revenue bond		2.76%	38.3	37.0	1.9
2016C Water revenue COP bond	2029	2.13%	43.1	34.9	3.3
2016D Water revenue COP bond	2029	3.14%	55.0	44.3	4.2
Bond discount				-	-
Bond premium				37.0	1.6
Compensated absences				6.3	1.4
Net pension liability				100.6	-
Other post employment liability				25.7	-
Semitropic water banking agreement	2035		46.9	10.0	-
Total enterprise funds debt				$ 637.6	$ 17.1

* All-in true interest cost represents the total cost of a bond financing, taking account any accrued interest premium or discount and costs of issuance.

The following is a summary of changes in long-term liabilities as of June 30, 2020 (in millions):

	Balance 7/1/2019	Additions	Reductions	Balance 6/30/2020	Due Within One Year
Governmental activities:					
2012A COP	$ 23.5	$ -	$ (4.3)	$ 19.2	$ 4.5
2017A COP	50.0	-	(3.8)	46.2	4.0
Compensated absences	9.0	6.1	(4.9)	10.2	2.4
Claims payable (See Note 13)	7.1	0.4	-	7.5	2.1
Net pension liability (See Note 11)	125.3	9.1	-	134.4	-
Other post employment benefits (See Note 12)	41.4	-	(8.4)	33.0	-
Premium on refunded debt	11.5	-	(1.5)	10.0	1.4
Total governmental activities long-term liabilities	$ 267.8	$ 15.6	$ (22.9)	$ 260.5	$ 14.4
Business-type activity:					
2006B Water revenue bonds	$ 18.1	$ -	$ (0.8)	$ 17.3	$ 0.9
2016A Water revenue bonds	106.3	-	-	106.3	-
2016B Water revenue bonds	75.2	-	-	75.2	-
2017A Water revenue bonds	51.4	-	(1.8)	49.6	1.9
2019A Water revenue bonds	15.2	-	(0.2)	15.0	0.2
2019B Water revenue bonds	80.0	-	(1.6)	78.4	1.7
2019C Water revenue bonds	-	38.3	(1.3)	37.0	1.9
2007B Water revenue COP	38.0	-	(38.0)	-	-
2016C Water revenue COP	38.0	-	(3.1)	34.9	3.3
2016D Water revenue COP	48.4	-	(4.1)	44.3	4.2
Bond discount on refunding	(0.1)	0.1		-	-
Premium on debt issuance	38.6	-	(1.6)	37.0	1.6
Compensated absences	5.4	4.6	(3.7)	6.3	1.4
Net pension liability (See Note 11)	94.6	6.0	-	100.6	-
Other post employment benefits (See Note 12)	32.0	-	(6.3)	25.7	-
Semitropic water banking agreement (See Note 15)	10.0	-	-	10.0	-
Total business-type activity long-term liabilities	$ 651.1	$ 49.0	$ (62.5)	$ 637.6	$ 17.1

The aggregate maturities of long-term debt are as follows (in millions):

	Governmental Activities		Business-type Activities	
Bonds Payable	Principal	Interest	Principal	Interest
2021	$ 8.5	$ 3.1	$ 14.1	$ 19.5
2022	8.9	2.7	14.8	19.1
2023	9.2	2.3	15.3	18.5
2024	9.7	1.9	15.9	18.0
2025	4.3	1.5	16.4	17.4
2026-2030	24.9	3.9	93.9	76.6
2031-2035	-	-	95.4	55.7
2036-2040	-	-	76.2	35.7
2041-2045	-	-	82.1	18.8
2046-2050	-	-	33.9	2.7
Total bonds payable requirements	65.5	$ 15.4	458.0	$ 282.0
Compensated absence	10.3		6.3	
Premium	9.9		37.0	
Claims payable	7.5		-	
OPEB	33.0		25.7	
Pension	134.3		100.6	
Semitropic water banking agreement	-		10.0	
Total outstanding non-current liabilities at June 30, 2020	$ 260.5		$ 637.6	

Governmental Activities

The following provides a brief description of Valley Water's debt, and other long-term liabilities, for governmental activities outstanding as of June 30, 2020:

2012A Certificates of Participation

In November 2012, Valley Water issued $53.0 million of Refunding and Improvement Certificates of Participation, Series 2012A, to be executed and delivered through the PFFC. The proceeds of 2012A COPs were used to: (1) refinance $52.4 million of the 2003A Certificates of Participation; (2) finance the cost of certain flood control improvements; (3) fund a reserve fund; and (4) pay the costs of issuing the 2012A Certificates. The 2012A COPs are payable from the 1994 Installment Payments, which are payable by Valley Water, and are secured by a pledge of and lien on, the Valley Water Flood Control System Revenues pursuant to Master Resolution No. 94-60 Flood Control System Revenues adopted by the Valley Water Board on June 23, 1994.

2017A Certificates of Participation

In March 2017, Valley Water issued $59.4 million of Refunding and Improvement Certificates of Participation, Series 2017A, to be executed and delivered through the PFFC. The proceeds of the 2017A COPs were used to: (1) refinance the $5.3 million outstanding balance of the 2004A Certificates of Participation; (2) refinance the $54.2 million outstanding balance of the 2007A Certificates of Participation; (3) finance the cost of certain flood control improvements; and (4) pay the costs of issuing the 2017A Certificates. The 2017A COPs are payable from the 1994 and 1995 Installment Payments, which are payable by Valley Water, and are secured by a pledge of and lien on, the Valley Water Flood Control System Revenues pursuant to Master Resolution No. 94-60 Flood Control System Revenues adopted by the Valley Water Board on June 23, 1994.

Claims Payable

Valley Water is self-insured and reports all its risk management activities in its Risk Management Internal Service Fund. Detailed information and calculation of the claims payable account balance are explained in Note 13, Risk Management.

Business-type Activity

The following provides a brief description of Valley Water's debt, and other long-term liabilities, for business-type activity outstanding as of June 30, 2020:

2006B Water Utility System Refunding Revenue Bonds

In December 2006, Valley Water issued $99.8 million of Water Utility System Refunding Revenue Bonds, Series 2006A and Taxable Series 2006B, pursuant to the Water Utility Senior System Master Resolution (94-58, as amended by 06-80). The proceeds of $57.4 million of the 2006A and 2006B Bonds were used to refinance $55.3 million of the remaining 2000A and 2000B and the proceeds of $42.4 million of 2006A and 2006B were used to repay approximately $40.9 million of commercial paper notes. In March 2016, Valley Water issued Series 2016A Water System Refunding Revenue Bonds to refund all 2006A outstanding principal.

2016A/B Water Systems Refunding Revenue Bonds

In March 2016, Valley Water issued $181.5 million of Water Systems Refunding Revenue Bonds comprising of Series 2016A for $106.3 million and Taxable Series B for $75.2 million, pursuant to the Water Utility Parity System Master Resolution (16-10) approved by the Board in February 2016. Proceeds of the 2016A Revenue Bonds, along with the original issue premium, were used to refinance all the currently outstanding Water Utility System Refunding Revenue Bonds Series 2006A and repay $73.0 million of outstanding tax-exempt commercial paper notes and costs of issuance. Proceeds of the 2016B Revenue Bonds were used to repay $75.0 million of the balance of the outstanding taxable commercial paper notes and costs of issuance. The obligation of Valley Water to pay principal and interest of the 2016A/B Water Systems Refunding Revenue Bonds is secured by a pledge of and lien on Valley Water's Water Utility System Revenues.

2017A Water System Refunding Revenue Bonds

In May 2017, Valley Water issued $54.7 million of Water Systems Refunding Revenue Bonds to refund the $64.8 million outstanding balance of the Water Utility System Revenue Certificates of Participation Series 2007A and pay costs of issuance of the 2017A Bonds. The obligation of Valley Water to pay principal and interest on the 2017A Bonds is secured by a pledge of and lien on Valley Water's Water Utility System Revenues and are payable from the Net Water Utility System Revenues pursuant to the Water Utility System Parity Master Resolution (16-10).

2019A/B Water Systems Refunding Revenue Bonds
In April 2019, Valley Water issued $95.3 million of Water System Refunding Revenue Bonds to repay the outstanding Commercial Paper Certificates to free up capacity in Valley Water's commercial paper program to finance on-going capital costs and costs of issuance. The obligation of Valley Water to pay principal and interest on the 2019A/B Bonds is secured by a pledge of and lien on Water Utility System Revenues and are payable from the Net Water Utility System Revenues pursuant to the Parity Master Resolution (16-10).

2019C Water Systems Refunding Revenue Bonds
In November 2019, Valley Water issued $38.3 million of Water System Refunding Revenue Bonds to refinance all the currently outstanding Water Utility Revenue Certifications of Participation Taxable Series 2007B and fund costs of issuance. The obligation of Valley Water to pay principal and interest on the 2019C Bonds is secured by a pledge of and lien on Water Utility System Revenues and are payable from the Net Water Utility System Revenues pursuant to the Parity Master Resolution (16-10)

2007B Water Utility Revenue Certificates of Participation

In October 2007, Valley Water issued $131.0 million of Water Utility Revenue Certificates of Participation, Series 2007A and Taxable Series 2007B, to be executed and delivered through the PFFC. The proceeds of the 2007A and 2007B COPs were used to finance capital construction projects in the Water Utility Enterprise. A 2007A Debt Service Reserve Fund was funded for the 2007A and 2007B COPs by purchasing a surety. The 2007A issuance was $77.3 million fixed rate COPs with a 30-year maturity. The 2007B issuance of $53.7 million are floating rate COPs based on the three-month LIBOR rate plus 32 basis points with a 30-year maturity. The 2007A and 2007B COPs are payable from 2007 Installment Payments which are payable by Valley Water from and secured by a pledge and lien on water utility revenues pursuant to the Water Utility Senior System Master Resolution (94-58, as amended by 06-80). The 2007A COPs were refunded by the 2017A Water System Refunding Revenue Bonds in May 2017. The 2007B COPs were refunded by the 2019C Water System Refunding Revenue Bonds in November 2019.

2016C/D Water Utility Revenue Certificates of Participation

In March 2016, Valley Water issued $98.0 million of Water Utility Systems Improvement Projects Revenue Certification of Participation, Series 2016C for $43.4 million and Taxable Series 2016D for $55.0 million, to be executed and delivered through the PFFC. Proceeds of the 2016C and 21016D COPs, along with the original issue premium will be used to finance capital construction projects in the Water Utility Enterprise and costs of issuance. The 2016C and 2016D COPs are payable from 2016 Installment Payments which are payable by Valley Water from and secured by a pledge and lien on water utility revenues pursuant to the Water Utility Parity System Master Resolution (16-10).

Semitropic Water Banking Agreement

In December 1995, Valley Water entered into a water banking and exchange program with Semitropic Water Storage District and its Improvement Districts that entitles Valley Water to storage, withdrawal, and exchange rights for Valley Water's State Water Project supplies. Valley Water's share of the total program capital costs is $46.9 million based on a 35 percent vesting in the program. Valley Water pays the program capital costs when storing and recovering water. At June 30, 2020, Valley Water has $10.0 million outstanding liability related to water storage and banking rights.

Compensated Absences

Compensated absences are paid out of the general fund as an employee benefit expense in the year the expense is realized and are charged to the different funds as part of the direct benefit rate. The compensated absences liability for the year is recognized in Valley Water's various enterprise funds and on the governmental activities column in the statement of net position.

(c) Other Debt Related Information

Valley Water has adopted master resolutions with respect to its water utility and watershed utility which contain certain events of default and remedies as described therein. Valley Water has also issued various bonds, notes or other obligations secured by such master resolutions or other revenues of Valley Water and which contain certain events of default and remedies as described therein. Valley Water has also entered into various reimbursement agreements or other financial contracts which contain certain events of default and remedies as described therein. Certain of these master resolutions, bonds, notes and other obligations and reimbursement agreement and other financial contracts contain provisions concerning the application of applicable Valley Water revenues if certain of the following conditions occur: default on debt service payments; the failure of Valley Water to observe or perform the conditions, covenants, or other agreement with respect thereto; bankruptcy filing by Valley Water; or if any court or competent jurisdiction shall assume custody or control of Valley Water, among other defaults. Certain of such master resolutions, bonds, notes and other obligations and reimbursement agreement and other financial contract contain acceleration provisions that allows a trustee, owners of bonds, notes or other obligations or the parties to such reimbursement agreements or other financial contracts to accelerate payments thereunder to the extent and as provided therein.

Resolutions and other financing agreements associated with Valley Water's and PFFC's bonds and certificates of participation contain a number of covenants, limitations, and restrictions. Valley Water believes it is in compliance with all significant covenants, limitations, and restrictions.

Financial obligations incurred under the commercial paper program, issued through the PFFC, currently include the obligations to reimburse the bank issuing direct pay letter of credit supporting the commercial paper program and to pay letter of credit fees to the bank. Valley Water's failure to comply with certain such obligations could result in an event of default. If an event of default occurs, the bank may exercise one or more rights and remedies. In addition to rights and remedies provided for under the law, the bank can declare all financial obligations with respect to such letter of credit to be immediately due and payable, cause the issuance of commercial paper to be temporarily ceased, or terminate the letter of credit which would cause the issuance of commercial paper to be permanently ceased. Commercial paper certificates are not subject to acceleration.

Valley Water has pledged future flood control system revenues to repay $65.5 million in long-term debt outstanding as of June 30, 2020, that was issued to finance the cost of flood control improvements. The certificates of participation (COPs) are payable from installment payments that are secured by flood control system revenues and are payable through fiscal years 2024 (2012A) and 2030 (2017A). The total principal and interest remaining to be paid on the combined debt is $80.8 million. A ten-year comparison of flood control system revenues to related debt service titled "Flood Control System Historical Operating Results – Combined Statements of Revenues and Debt Service Coverage – Last Ten Fiscal Years" can be found in the Statistical Section.

Valley Water has also pledged water utility system revenues, net of specified maintenance and operating expenses, to repay $458.0 million in long-term debt outstanding as of June 30, 2020, that was issued to finance the cost of capital construction projects for the water utility enterprise. The secured debt includes revenue bonds and COPs. The revenue bonds are payable from net water utility system revenues and the revenue COPs are payable from installments that are secured by net water utility system revenues. The long-term debt is payable through fiscal year 2049. Total principal outstanding and interest costs remaining to be paid on the combined debt is $740.1 million.

NOTE 8 - PROPERTY TAXES AND BENEFIT ASSESSMENTS

Valley Water derives certain revenues from the assessment of property tax parcel levies and the levy of benefit assessments and a special parcel tax. The property tax levy is composed of two categories: (1) an allocation of the County of Santa Clara's 1 percent tax; and (2) voter approved levy to repay capital and operating costs related to imported water from the State Water Project. Benefit Assessments are collected as part of duly authorized debt repayment phase of the voter-approved assessments. In November 2000, voters approved a 15-year special parcel tax to fund the countywide Clean, Safe Creeks & Natural Flood Protection Program. The levy became effective July 1, 2001 and is based on the proportionate storm water runoff for each property.

In November 2012, the voters approved the Safe, Clean Water and Natural Flood Protection (Safe, Clean Water) special parcel tax. The Safe, Clean Water program builds on the success of the Clean, Safe Creeks and Natural Flood Protection (Clean, Safe Creeks) plan approved by the voters in 2000. The Safe, Clean Water program replaced the Clean, Safe Creeks measure in its entirety beginning July 1, 2013 (see Note 17 - Subsequent Events for additional information on the recent ballot measure). The Safe, Clean Water special parcel tax will provide an estimated total of $723.0 million of revenue for operations and capital projects. The program will be funded by a combination of revenues from the continuation of an annual special tax, reserves from unspent funds of the Clean, Safe Creeks plan, and state and federal funding. For fiscal year 2020, the budget includes $45.5 million of special parcel tax for this program.

Property tax and benefit assessment revenues recorded for the year ended June 30, 2020 are shown on the following page (in millions).

	General Fund	Special Revenue Funds	Water Enterprise Fund
Property taxes:			
1% tax allocation	$ 9.2	$ 93.1	$ 8.4
Special parcel tax	-	46.1	-
Voter approved indebtedness:			
State water	-	-	21.8
Total taxes	9.2	139.2	30.2
Benefit assessments	-	13.4	-
Total property taxes and benefit assessments	$ 9.2	$ 152.6	$ 30.2

The County of Santa Clara (County) is responsible for the assessment, collection, and apportionment of property taxes for Valley Water. The amount of property tax levies is restricted by Article 13A of the California State Constitution (commonly referred to as Proposition 13). Valley Water is responsible for determining the amount of benefit assessment, special parcel tax, and State Water Project Debt Service. Secured property taxes and benefit assessments are each payable in equal installments, November 1 and February 1, and become delinquent on December 10 and April 10, respectively. The lien date is January 1 of each year. Property taxes on the unsecured roll are due on the March 1 lien date and become delinquent if still unpaid on August 31.

Valley Water has elected to participate in the “Teeter Plan” offered by the County whereby Valley Water receives 100 percent of secured property and supplemental property taxes levied in exchange for foregoing any interest and penalties collected on the related delinquent taxes.

NOTE 9 - FUND BALANCES

In the fund financial statements, governmental funds report fund balance as non-spendable, restricted, committed, assigned or unassigned based primarily to the extent to which Valley Water is bound to observe constraints imposed upon the use of the resources reported in governmental funds.

- Non-spendable fund balance includes net resources that cannot be spent because they are either a) not spendable because of their form, or b) must be maintained intact pursuant to legal or contractual requirements.

- Restricted fund balance includes amounts that are subject to limitations imposed by either: a) creditors, grantors, contributors or laws and regulations of other governments, or b) imposed by law through constitutional provisions or enabling legislation.

- Committed fund balance includes spendable resources that can only be used for specific purposes pursuant to constraints imposed by formal action of Valley Water’s highest level of decision-making authority, the Valley Water Board, through adopted resolutions. Those constraints remain binding unless the Valley Water Board removes or changes in the same

manner to previously commit those resources. These Valley Water Board's actions must occur prior to June 30th of the applicable fiscal year.

- Assigned fund balance includes amounts that are constrained by Valley Water's intent to be used for specific purposes, but are neither restricted nor committed. The intent can be established or changed at the discretion of the Valley Water Board, or an official designated for that purpose, the Chief Executive Officer, in accordance with the provisions of the Governance Policies of the Board, Policy No. EL-5, *Purchasing and Contracts.*

- Unassigned fund balance represents residual net resources that have not been restricted, committed, or assigned. This includes the residual General Fund balance and residual fund deficits, if any, of other governmental funds.

Spending Prioritization in Using Available Resources

When an expense is incurred for purposes for which both restricted resources and unrestricted resources fund balance are available, Valley Water considers restricted resources to be spent first. When committed, assigned, and unassigned resources can be used for the same purpose, Valley Water's flow assumption is to spend in the sequence of committed resources first, assigned second, and unassigned last.

The various fund balances are established by actions of the Board of Directors and can be increased, reduced or eliminated by similar actions with the exception of contracts and commitments on the assigned fund balance, which can be reduced or eliminated without the action of the Board of Directors. Valley Water's reserve amounts are reviewed annually to ensure compliance with Valley Water's reserve policy. Changes to the restricted, committed and assigned reserves are presented to the Board of the Directors for review and approval.

Detailed schedule of fund balances as of June 30, 2020 is as follows (in millions):

	General	Watershed & Stream Steward	Safe, Clean Water & Natural Flood Protection Program	COP Construction	COP Debt Service	Total Govern-mental Funds
Restricted Fund Balance:						
Debt service	$ -	$ -	$ -	$ -	$ 5.4	$ 5.4
SCW-current authorized Capital Projects	-	-	158.5	-	-	158.5
Total restricted fund balance	-	-	158.5	-	5.4	163.9
Committed Fund Balance:						
Operating & capital	8.2	97.7	-	-	-	105.9
Current authorized capital projects	-	62.8	-	-	-	62.8
Total committed fund balance	8.2	160.5	-	-	-	168.7
Assigned Fund Balance:						
Contracts and commitments	5.7	7.4	-	-	-	13.1
Market valuation	0.3	3.0	-	-	-	3.3
Benefits assessment reserve	-	1.1	-	-	-	1.1
Total assigned fund balance	6.0	11.5	-	-	-	17.5
Total fund balances	$ 14.2	$ 172.0	$ 158.5	$ -	$ 5.4	$ 350.1

NOTE 10 - NET POSITION

The proprietary funds financial statements utilize a net position presentation. Net position is categorized as follows: (1) invested capital assets (net of related debt), (2) restricted and (3) unrestricted.

Net Investment in Capital Assets - This category groups all capital assets, including infrastructure, into one component of net position. Accumulated depreciation and the outstanding balances of debt that are attributable to the acquisition, construction or improvement of these assets reduce the balance in this category.

Restricted Net position – This category presents external restrictions imposed by creditors, grantors, contributors, laws, or regulations of other governments and restrictions imposed by law through constitutional provisions or enabling legislation.

Unrestricted Net position – This category represents net position of Valley Water, not restricted for any project or other purpose.

The following table shows the detailed schedule of the proprietary funds' net position as of June 30, 2020 (in millions).

	Water Enterprise Fund	State Projects Fund	Equipment Fund	Risk Management Fund	Information Technology Fund
Restricted Net Position					
San Felipe emergency reserve	$ 3.3	$ -	$ -	$ -	$ -
Cash on hand with fiscal agents	0.1	-	-	-	-
GP5 reserve	6.6	-	-	-	-
Rate stabilization	23.5	-	-	-	-
Public-private partnership	8.0	-	-	-	-
WUE SVAWPC reserve	1.3	-	-	-	-
Supplemental water supply	15.1	-	-	-	-
Drought reserve	10.0	-	-	-	-
State water project	-	16.8	-	-	-
Total restricted net position	67.9	16.8	-	-	-
Unrestricted Net Position					
Operating and capital	48.7	-	3.3	-	0.7
Water inventory	134.4	-	-	-	-
Current authorized projects	39.2	-	-	-	9.3
Market valuation	4.9	-	0.1	0.2	0.4
Property self-insurance/catastrophic	-	-	-	6.1	-
Encumbrances	108.5	-	2.0	0.3	6.0
Net pension liability	(76.5)	-	(3.1)	(2.0)	(0.1)
Net other post-employment benefits	(32.2)	-	(1.0)	(0.8)	(0.2)
Total unrestricted net position	227.0	-	1.3	3.8	16.1
Net Investment in Capital Assets	674.1	15.1	8.9	-	4.4
Net Position	$ 969.0	$ 31.9	$ 10.2	$ 3.8	$ 20.5

NOTE 11 - EMPLOYEES' RETIREMENT PLAN

Plan Description

All qualified permanent and probationary employees are eligible to participate in the agent multiple-employer defined benefit pension plan (the Plan) administered by the California Public Employees' Retirement System (CalPERS), which acts as a common investment and administrative agent for its participating member employers. Benefit provisions under the Plans are established by State statute and Valley Water's resolution. CalPERS issues publicly available reports that include a full description of the pension plans regarding benefit provisions, assumptions and membership information that can be found on the CalPERS website.

Benefits Provided

CalPERS provides service retirement and disability benefits, annual cost of living adjustments and death benefits to plan members, who must be public employees and beneficiaries. Benefits are based on years of credited service, equal to one year of full-time employment. Members with five years of total service are eligible to retire at age 50 with statutorily reduced benefits. All members

are eligible for non-duty disability benefits after 10 years of service. The death benefit is one of the following: the Basic Death Benefit, the 1957 Survivor Benefit, or the Optional Settlement 2W Death Benefit. The cost of living adjustments for each plan are applied as specified by the California Public Employees' Retirement Law. Benefit provisions and all other requirements are established by State statutes and may be amended by the Valley Water's governing board.

The Plan's provisions and benefits in effect at June 30, 2020, are summarized as follows:

	Prior to	3/19/2012 to	On or after
Hire date	3/19/2012	12/31/2012	1/1/2013
Benefit formula	2.5% @ 55	2% @ 60	2% @ 62
Benefit vesting schedule	5 years of service	5 years of service	5 years of service
Benefit payments	monthly for life	monthly for life	monthly for life
Minimum Retirement age	50	50	52
Monthly benefits, as a % of eligible compensation	2.0% to 2.5%	1.1% to 2.4%	1.0% to 2.5%
Required employee contribution rates	8.0% + 2.0%*	7.0% + 3.0%*	6.75% + 1.0%
Required employer contribution rates	10.276% plus $15.3 million prepayment for prior unfunded service cost		

* Member additional contribution towards Valley Water's CalPERS cost per negotiated agreement with the bargaining units

Employees Covered – As of the most recent CalPERS annual valuation report, dated July 2020, the following employees were covered by the benefit terms of the Plan:

Inactive employees or beneficiaries currently receiving	814
Active employees	752

Contributions

Section 20814(c) of the California Public Employees' Retirement Law requires that the employer contribution rates for all public employers be determined on an annual basis by the actuary and shall be effective on the July 1 following notice of a change in the rate. Funding contributions for the Plan is determined annually on an actuarial basis as of June 30 by CalPERS. The actuarially determined rate is the estimated amount necessary to finance the costs of benefits earned by employees during the year, with an additional amount to finance any unfunded accrued liability.

For the year ended June 30, 2020 contributions to the plan were $28.3 million. Valley Water is required to contribute the difference between the actuarially determined rate and the contribution rate of employees. All funds with payroll charges contribute to the actuarially determined contribution.

Net Pension Liability

Valley Water's net pension liability for the Plan is measured as the total pension liability, less the pension plan's fiduciary net position. The net pension liability of the Plans is measured as of June 30, 2019, using an annual actuarial valuation as of June 30, 2018 rolled forward to June 30, 2019 using standard update procedures. A summary of principal assumptions and methods used to determine the net pension liability is shown below.

Actuarial Assumptions – The total pension liabilities in the June 30, 2018 actuarial valuations were determined using the following actuarial assumptions:

Valuation date	June 30, 2018
Measurement date	June 30, 2019
Actuarial cost method	Entry-age normal cost method
Discount rate	7.15%
Inflation	2.75%
Salary increases	Varies by entry age and service
Investment rate of return(1)	7.375%
Mortality rate table(2)	Derived using CalPERS' membership data for all funds
Post retirement benefit increase	Contract COLA up to 2.00% unit purchasing power protection allowance floor on purchasing power applies, 2.50% thereafter.

(1)Net of pension plan investment and administrative expenses; includes inflation

(2)The mortality rate table was developed based on CalPERS' specific data. The table includes 15 years of mortality improvements using Society of Actuarial Scale BB.

In 2018, demographic assumptions and inflation rate were changed in accordance to the CalPERS Experience Study and Review of Assumptions December 2017. There were no changes in the discount rate. In 2017, the discount rate was reduced from 7.65% to 7.15%. The Experience Study can be obtained at CalPERS' website under "Forms and Publications".

Change in Assumptions

Inflation Rate

For the measurement date of June 30, 2019, the inflation rate was 2.75%.

Discount Rate

The discount rate used to measure the total pension liability for each Plan was 7.15%. The projection of cash flows used to determine the discount rate for each Plan assumed that contributions from all plan members in the Public Employees Retirement Fund (PERF) will be made at the current member contribution rates and that contributions from employers will be made at statutorily required rates, actuarially determined. Based on those assumptions, each

Plan's fiduciary net position was projected to be available to make all projected future benefit payments of current plan members for all plans in the PERF. Therefore, the long-term expected rate of return on plan investments was applied to all periods of projected benefit payments to determine the total pension liability for each Plan.

The long-term expected rate of return on pension plan investments was determined using a building-block method in which best-estimate ranges of expected future real rates of return (expected returns, net of pension plan investment expense and inflation) are developed for each major asset class.

In determining the long-term expected rate of return, CalPERS considered both short-term and long-term market return expectations as well as the expected pension fund cash flows. Such cash flows were developed assuming that both members and employers will make their required contribution on time and as scheduled on all future years. Using historical returns of all the funds' asset classes, expected compound (geometric) returns were calculated over the short-term (first 10 years) and the long-term (11+ years) using a building-block approach. Using the expected nominal returns for both short-term and long-term, the present value of benefits was calculated for each fund. The expected rate of return was set by calculating the single equivalent expected return that arrived at the same present value of benefits for cash flows as the one calculated using both short-term and long-term returns. The expected rate of return was then set equivalent to the single equivalent rate calculated above, adjusted to account for assumed administrative expenses.

The following table reflects the long-term expected real rate of return by asset class. The rate of return was calculated using the capital market assumptions applied to determine the discount rate and asset allocation. These geometric rates of return are net of administrative expenses.

Asset Class[1]	Current Strategic Allocation	Real Rates of Return Years 1-10[2]	Real Rates of Return Years 11+[3]
Global Equity	50.0%	4.80%	5.98%
Fixed Income	28.0%	1.00%	2.62%
Inflation Assets	0.0%	0.77%	1.81%
Private Equity	8.0%	6.30%	7.23%
Real Assets	13.0%	3.75%	4.93%
Liquidity	1.0%	0.00%	-0.92%
Total	100.0%		

[1] In the CalPERS CAFR, Fixed Income is included in Global Debt Securities, Liquidity is included in Short-term Investments; Inflation Assets are included in both Global Equity Securities and Global Debt Securities

[2] An expected inflation of 2.00% used for this period.

[3] An expected inflation of 2.92% used for this period.

Changes in the Net Pension Liability

The following table shows the changes in net pension liability recognized over the measurement period (in millions):

	Increase (Decrease)		
	Total Pension Liability (a)	Fiduciary Net Position (b)	Net Pension Liability (c) = (a) - (b)
Beginning balance	$813.7	$593.8	$219.8
Changes recognized for the Measurement Period:			
Service cost	16.5	-	16.5
Interest on total pension liability	58.3	-	58.3
Difference between expected and actual experience	13.4	-	13.4
Contribution from employer	-	26.6	(26.6)
Contribution from employees	-	7.6	(7.6)
Net investment income	-	39.3	(39.3)
Benefit payments, including refunds of employee contributions	(38.4)	(38.4)	-
Administrative expense	-	(0.4)	0.4
Net changes	49.8	34.7	15.1
Ending balance	$863.5	$628.5	$234.9

Sensitivity of the Net Pension Liability to Changes in the Discount Rate

The following presents the net pension liability of Valley Water, calculated using the current discount rate, as well as what Valley Water's net pension liability would be if it were calculated using a discount rate that is 1-percentage point lower or 1-percentage point higher than the current rate (in millions):

	Discount Rate		
	-1%	Current	+1%
Plan Net Pension Liability	$ 348.5	$ 234.9	$ 140.7

To present a more conservative estimate of the pension liability, applying a 3.25% discount rate, for example, would result in a pension liability of approximately $696.5 million.

Pension Plan Fiduciary Net Position

Detailed information about Valley Water's pension plan fiduciary net position is available in separately issued CalPERS financial reports.

Pension Expenses and Deferred Outflow/Inflow of Resources

For the year ended June 30, 2020 (for measure period ended June 30, 2019), Valley Water recognized pension expense of $43.6 million. As of June 30, 2020, Valley Water reported deferred outflows of resources and deferred inflows of resources related to pensions from the following sources (in millions):

	Deferred Outflow of Resources	Deferred Inflow of Resources
Pension contribution subsequent to measurement date	$ 28.3	$ -
Change in assumptions	9.3	(4.2)
Net difference between actual and expected experience	10.0	(1.7)
Net difference between projected and actual earnings on plan investments	-	(3.3)
Total	$ 47.6	$ (9.2)

$28.3 million is reported as deferred outflows of resources related to contributions subsequent to the measurement date and will be recognized as a reduction from the net pension liability in the following fiscal year. Other amounts reported as deferred outflows of resources and deferred inflows of resources related to pensions will be recognized as pension expense as shown in the succeeding table.

Measurement Periods Ended June 30	Deferred Outflows(Inflows) of Resources
2020	$11.4
2021	(4.1)
2022	2.0
2023	0.9
Total	$10.2

NOTE 12 - OTHER POST-EMPLOYMENT BENEFITS (OPEB)

Plan Description

Valley Water provides post-employment health care benefits, in accordance with negotiated memoranda of understanding with employee groups and adoption by the Board of Directors, for retired employees and/or their surviving spouses, and to certain employees who retire due to disability who meet the eligibility requirements and elect the option. Valley Water must be the employee's last CalPERS employer, and the retiree must be receiving a monthly CalPERS retirement pay.

Benefits Provided

	Hire/Retirement Date	Eligibility Rule (Years of Continuous Service)	Valley Water's Required Contribution
Classified Employee Association (AFSCME – Local 101) Engineers Society (IFPTE-Local 21) Professional Managers Association (IFPTE – Local 21)	Retired prior to July 1, 1988		Fixed amount of $165 per month.
	Retired from July 1, 1988 through June 30, 1990	10 years	100% medical premium for retiree.
	Retired from July 1, 1990 or later and hired prior to December 30, 2006	10 years 15 years	100% medical premium for retiree. 100% medical premium for retiree plus one eligible dependent.
	Retired from July 1, 1990 or later and hired between December 30, 2006 and March 1, 2007	10 years 15 years	Retiree is covered for medical. Medical premium cost sharing is required with the same contribution percentage as active employees and based on medical premium applicable to active employees or retirees, whichever is less. Retiree plus one eligible dependent are covered for medical. Medical premium cost sharing is required with the same contribution percentage as active employees and based on medical premium applicable to active employees or retirees, whichever is less.
	Hired on or after March 1, 2007	15 years 20 years	Retiree is covered for medical. Medical premium cost sharing is required with the same contribution percentage as active employees and based on medical premium applicable to active employees or retirees, whichever is less. Retiree plus one eligible dependent are covered for medical. Medical premium cost sharing is required with the same contribution percentage as active employees and based on medical premium applicable to active employees or retirees, whichever is less.

	Hire/Retirement Date	Eligibility Rule (Years of Continuous Service)	Valley Water's Required Contribution
Unclassified At Will	Retired prior to July 1, 1988		Fixed amount of $165 per month.
	Retired from July 1, 1988 through June 30, 1990	10 years	100% medical premium for retiree.
	Retired from July 1, 1990 through June 18, 1995	10 years 15 years	100% medical premium for retiree. 100% medical premium for retiree plus one eligible dependent.
	Retired from June 19, 1995 through October 21, 1996	10 years 15 years 25 years	100% medical premium for retiree. 100% medical premium for retiree plus one eligible dependent. 100% medical, dental, and vision coverages for the retiree plus two or more eligible dependents.
	Retired from October 22, 1996 or later and hired prior to December 30, 2006	10 years 15 years 25 years	100% medical premium for retiree. 100% medical, dental, and vision coverages for the retiree plus one eligible dependent. 100% medical, dental, and vision coverages for the retiree plus two or more eligible dependents.
	Hired on or after December 30, 2006 and prior to March 1, 2007	10 years 15 years	Medical coverage is provided for retiree. Medical premium cost sharing is required with the same contribution percentage as active employees and based on the medical premium amount applicable to active employees or retirees, whichever is less. Medical, dental, and vision coverages are provided for retiree and one eligible dependent. Medical premium cost sharing is required with the same contribution percentage as active employees and based on the medical premium amount applicable

	Hire/Retirement Date	Eligibility Rule (Years of Continuous Service)	Valley Water's Required Contribution
Unclassified At Will	Hired on or after December 30, 2006 and prior to March 1, 2007	15 years (con't) 25 years	to active employees or retirees, whichever is less. Medical, dental, and vision coverages are provided for retiree plus two or more eligible dependents. Medical premium cost sharing is required with the same contribution percentage as active employees and based on the medical premium amount applicable to active employees or retirees, whichever is less.
	Hired on or after March 1, 2007	15 years 20 years	Retiree is covered for medical. Medical premium cost sharing is required with the same contribution percentage as active employees and based on medical premium applicable to active employees or retirees, whichever is less. Retiree plus one eligible dependent are covered for medical. Medical premium cost sharing is required with the same contribution percentage as active employees and based on medical premium applicable to active employees or retirees, whichever is less.

As of August 1, 2007, all current retirees not yet 65 years of age and Medicare eligible and all future retirees who are Medicare eligible must enroll themselves in Medicare when they reach the eligibility date for Medicare. Their Medicare eligible dependents who are enrolled in Valley Water's health plan must also enroll in Medicare upon their eligibility date. Valley Water reimburses the ongoing Medicare Part B cost incurred by the retiree and/or dependent payable quarterly.

After an evaluation of the cost savings realized in implementing the Medicare enrollment plan since August 2007, Valley Water decided to expand the Medicare enrollment requirement to all retirees and their eligible dependents that are enrolled in Valley Water's medical plan. As of July 1, 2009, all Medicare eligible retirees and their eligible dependents were required to enroll in Medicare. Valley Water reimburses the Medicare Part B penalty charged by the Social Security Administration to the retirees/dependents due to late enrollment.

Valley Water provides the unclassified group of retirees $50,000 life insurance upon retirement with a five-year phase out in declining increments of $10,000 per year after retirement.

Employees Covered – As of the most recent OPEB annual valuation report, dated June 30, 2019, the following employees were covered by the benefit terms of the Plan:

Inactive employees or beneficiaries currently receiving	846
Active employees	753

Contributions

On June 24, 2008, Valley Water's Board of Directors adopted a resolution approving the agreement and election of Valley Water to prefund OPEB through CalPERS under its California Employer's Retiree Benefit Trust (CERBT) Program, an agent multiple-employer plan consisting of an aggregation of single-employer plans. On September 9, 2008, Valley Water joined CERBT. The Board of Directors approved the reallocation of $17.7 million from its existing reserve for the initial prefunding of the unfunded liability for the first year of reporting. Subsequent years funding, pursuant to the annual budget approved by the Board of Directors, was made at the beginning of each fiscal year through fiscal year 2017. The CERBT issues a publicly available financial report that includes financial statements and required supplementary information. That report may be obtained from the California Employees' Retirement System, P. O. Box 942703, Sacramento, CA 94229-2703.

OPEB and its contribution requirements are established by memorandum of understanding with the applicable employee bargaining units and may be amended by agreements between Valley Water and the bargaining groups. For the fiscal year ended June 30, 2020, the District's total contribution to the plan amounted to $10.8 million. All funds with payroll charges contribute to the actuarially determined contribution.

Net OPEB Liability

Valley Water's net OPEB liability was measured on June 30, 2019 for reporting date June 30, 2020. The total OPEB liability used to calculate the net OPEB liability was determined by an actuarial valuation dated June 30, 2019, based on the following actuarial methods and assumptions:

Discount Rate	7.59%
Inflation	3.00%
Salary Increases	3.25%
Investment Rate of Return	7.59%
Mortality Rate	Derived from the CalPERS study of Miscellaneous Public Agency experience
Pre-retirement Turnover(1)	Derived from the CalPERS study of Miscellaneous Public Agency experience
Healthcare Trend Rate(2)	5.50% grading to ultimate 4% for medical and flat 3% for dental and vision

(1)Net of OPEB plan investment expenses, including inflation

(2)The mortality rate table was developed based on CalPERS' nonindustrial miscellaneous public agency experience study for 14 years ending June 2011.

The long-term, expected rate of return on OPEB plan investments was determined using a building-block method in which expected future real rates of return (expected returns, net of OPEB plan investment expense and inflation) are developed for each major asset class. These ranges are combined to produce the long-term expected rate of return by weighting the expected future real rates of return by the target allocation percentage and by adding expected inflation. The target allocation and expected real rates of returns for each major asset class are summarized in the following table:

Asset Class	Strategy 1 Allocation	Real Rates of Return: 1-10 Years [1]	Real Rates of Return: 11-60 Years [2]
Global Equity	59.0%	4.80%	5.98%
Fixed Income	25.0%	1.10%	2.62%
Global Real Estate (REITs)	8.0%	3.20%	5.00%
Treasury Inflation Protected Securities (TIPS)	5.0%	0.25%	1.46%
Commodities	3.0%	1.50%	2.87%

[1] An expected inflation of 2.00% used for this period.
[2] An expected inflation of 2.92 used for this period.

Discount Rate

The discount rate of 7.59% is the expected long-term rate of return on Valley Water assets using investment strategy #1 within the CERBT. The projected cash flows used to determine the discount rate assumed that Valley Water contributions will be made at rates equal to the actuarially determined contribution rates. Based on those assumptions, the OPEB plan's fiduciary net position was projected to be available to make all projected OPEB payments for current active and inactive employees and beneficiaries. Therefore, the long-term expected rate of return on OPEB plan investments was applied to all periods of projected benefit payments to determine the total OPEB liability.

Changes in OPEB Liability

The following table shows the changes in net OPEB liability recognized over the measurement period (in millions):

	Increase / (Decrease)		
	Total OPEB Liability (a)	Plan Fiduciary Net Position (b)	Net OPEB Liability (c)=(a)-(b)
Beginning balance	$ 180.8	$ 107.5	$ 73.3
Changes recognized for the Measurement period:			
Service cost	2.6	-	2.6
Interest cost	12.9	-	12.9
Effect of changes in actuarial assumptions loss/(gain)	(5.5)	-	(5.5)
Other liability experience loss/(gain)	(8.0)	-	(8.0)
Contribution	-	10.1	(10.1)
Benefits payments	(10.1)	(10.1)	-
Non benefit related administrative expenses from plan trusts	-	(0.1)	0.1
Expected investment return	-	7.7	(7.7)
Investment experience loss/(gain)	-	(1.1)	1.1
Net changes	(8.1)	6.5	(14.6)
Ending balance	$ 172.7	$ 114.0	$ 58.7

Sensitivity of the Net OPEB Liability to Changes in the Discount Rate

The following presents the net OPEB liability of Valley Water, calculated using the current discount rate, as well as what Valley Water's net OPEB liability would be if it were calculated using a discount rate that is 1-percentage point lower or 1-percentage point higher than the current rate, for measurement period ended June 30, 2019 (in millions):

	Discount Rate		
	-1%	Current	+1%
Net OPEB Liability	$ 78.7	$ 58.6	$ 41.7

Sensitivity of the Net OPEB Liability to Changes in the Health Care Cost Trend Rates

The following presents the net OPEB liability of Valley Water, if it were calculated using health care cost trend rates that are 1-percentage point lower or 1-percentage point higher than the current rate, for measurement period ended June 30, 2019 (in millions):

	Discount Rate		
	-1%	Current	+1%
Net OPEB Liability	$ 40.7	$ 58.6	$ 80.2

OPEB Plan Fiduciary Net Position

Detailed information about Valley Water's OPEB plan fiduciary net position is available in separately issued CalPERS CERBT financial reports.

OPEB Expense and Deferred Outflow/Inflow of Resources

For the year ended June 30, 2020, Valley Water recognized OPEB credit expense of $5.9 million. At June 30, 2020, Valley Water reported deferred outflows of resources and deferred inflows of resources related to OPEB from the following sources (in millions):

	Deferred Outlfow of Resources	Deferred Inflow of Resources
OPEB contribution subsequent to measurement date	$ 10.7	$ -
Changes in assumption		(4.5)
Difference between actual and expected experience	-	(6.4)
Net difference between projected and actual earnings on plan investment	-	(0.7)
Total	$ 10.7	$ (11.6)

$10.7 million is reported as deferred outflows of resources related to contributions subsequent to the measurement date will be recognized as a reduction from the net OPEB liability in the following fiscal year. Other amounts reported as deferred outflows of resources and deferred inflows of resources related to OPEB will be recognized as OPEB expense as follows (in millions):

Year ending June 30	Deferred Outflows/(Inflows) of Resources
2021	($3.1)
2022	(3.1)
2023	(2.5)
2024	(2.3)
2025	(0.6)
Total	($11.6)

NOTE 13 - RISK MANAGEMENT

Valley Water is exposed to various risks of loss related to torts; theft of, damage to, and destruction of assets; errors and omissions; injuries to employees; and natural disasters. Valley Water reports all of its risk management activities in its Risk Management Internal Service Fund.

Valley Water's deductibles and maximum coverage are as follows (in thousands):

Coverage Descriptions	Commercial Insurance Deductibles	Coverage
General liability	$2,000	$50,000
Workers' compensation	1,000	Statutory
Property damage (subject to policy sub-limits)	50	500,000
Fidelity (Crime) - Directors	5	1,000
Fidelity (Crime) – Non-Directors	10	2,000
Non-owned aircraft liability	-	5,000
Boiler and machinery	50	100,000

Claims expenses and liabilities are reported for self-insured deductibles when it is probable that a loss has occurred, and the amount of that loss can be reasonably estimated. These losses include an estimate of claims that have been incurred but not reported, allocated and unallocated claims adjustment expenses and incremental claim expense. Claim liabilities are reevaluated periodically to take into consideration recently settled claims, the frequency of claims, and other economic and social factors. At June 30, 2020, the liability for self-insurance claims was $7.5 million. This liability is the Valley Water's best estimate based on available information. Settled claims have not exceeded commercial insurance coverage in any of the past three fiscal years.

Changes in the reported liability since June 30, 2020 are as follows (in millions):

	General Liability	Workers' Compensation	Total
Claims payable at June 30, 2018	$3.5	$3.0	$6.5
Current year premiums, incurred claims and changes in estimates	1.6	0.1	1.7
Claim payments	(0.9)	(0.3)	(1.2)
Claims payable at June 30, 2019	4.2	2.8	7.0
Current year premiums, incurred claims and changes in estimates	1.0	0.3	1.3
Claim payments	(0.7)	(0.1)	(0.8)
Claims payable at June 30, 2020	4.5	$ 3.0	$ 7.5
Current Portion	$1.5	$0.6	$2.1

NOTE 14 - TRANSFERS IN AND OUT

Transfers are used to: 1) move revenues from the fund that statute or budget requires to collect them to the fund that statute or budget requires to expend them, 2) move receipts to debt service from the funds collecting the receipts to the debt service fund as debt service payments become due, and 3) move debt proceeds held in the construction fund to the funds incurring the construction expense.

In the year ended June 30, 2020, the following transfers occurred between funds:

- $0.4 million was transferred from the Watershed and Stream Stewardship Fund to the General Fund to support drought induced tree removal projects
- $0.1 million was transferred from the Water Enterprise Fund to the Watershed and Stream Stewardship Fund to help pay for the Safe Clean Water Renewal efforts
- $1.6 million was transferred from the COP Construction Fund to the Watershed and Stream Stewardship Fund to fund certain projects
- $0.2 million was transferred from the General Fund to the Safe, Clean Water and Natural Flood Protection Program Fund to assist with Winfield Warehouse costs
- $0.5 million was transferred from the COP Construction Fund to the Safe, Clean Water and Natural Flood Protection Program Fund to fund certain projects
- $20.2 million was transferred from the Watershed and Stream Stewardship Fund to the Safe, Clean Water and Natural Flood Protection Program Fund to fund the Encampment Clean-up Program and Upper Penitencia Creek and Upper Llagas Creek Flood Protection projects
- $0.5 million was transferred from the General Fund to the COP Debt Service Fund to pay debt service payments
- $11.0 million was transferred from the individual zone Funds to the COP Debt Service Fund to pay debt service payments
- $0.5 million was transferred each from the General Fund and Watershed Fund to the Water and Enterprise Fund for the Open Space credit
- $1.7 million and $2.5 million were transferred from the Watershed and Stream Stewardship Fund, and Water Enterprise Fund, respectively, to the Information Technology Fund to fund capital projects

Interfund transfers for the year ended June 30, 2020, is as follows (in millions):

Fund Receiving Transfers	Fund Making Transfers	Amount Transferred
General Fund	Watershed and Stream Stewardship	$ 0.4
Watershed & Stream Stewardship	Water Enterprise	0.1
	COP Construction Fund	1.6
Safe, Clean Water Fund	General Fund	0.2
	COP Construction Fund	0.5
	Watershed and Stream Stewardship	20.2
COP Debt Service Fund	General Fund	0.5
	Lower Peninsula Watershed	2.3
	West Valley Watershed	1.8
	Guadalupe Watershed	3.7
	Coyote Watershed	3.1
Water Enterprise	General Fund	0.5
	Watershed & Stream Stewardship	0.6
Information Technology Fund	Watershed and Stream Stewardship	1.6
	Water Enterprise	2.5
Total interfund transfers		$ 39.6

NOTE 15 – PRIOR PERIOD ADJUSTMENT

Starting fiscal year 2020, Valley Water's Board of Directors decided to record stored water as inventory. The impact of the implementation on the beginning net position is as follows:

	(Dollars in Millions)	
Net Position	Government-wide	Business-type
Beginning balance	$ 1,641.5	$ 778.6
Inventory adjustment	-	133.2
Beginning balance, restated	$ 1,641.5	$ 911.8

NOTE 16 - COMMITMENTS

(a) Contract and Purchase Commitments

As of June 30, 2020, governmental funds had encumbrances of approximately $44.9 million, while proprietary funds had open purchase commitments of approximately $116.9 million related to new or existing contracts and agreements. These encumbrances are only commitments for the expenditure of funds and do not represent actual expenditures or liabilities.

A detailed breakdown of encumbrances of the governmental and proprietary funds is shown below (in millions).

	Fund Balances		
Fund	Governmental Assigned	Proprietary Unrestricted	Total
General Fund	$ 5.7	$ -	$ 5.7
Watershed and Streams Stewardship Fund	7.4	-	7.4
Safe, Clean Water and Natural Flood Protection	31.8	-	31.8
Water Enterprise Fund	-	108.5	108.5
Equipment Fund	-	2.0	2.0
Risk Management Fund	-	0.3	0.3
Information Technology Fund	-	6.1	6.1
Total	$ 44.9	$ 116.9	$ 161.8

(b) San Felipe Project Water Deliveries

Valley Water has contracted with the U.S. Department of the Interior (USDI) for water deliveries from the Central Valley Project. The contract requires the District to operate and maintain Reach 1, Reach 2, and Reach 3 of the San Felipe Division facilities of the USDI.

During fiscal year 2017, Valley Water amended this contract. The amended contract provided for compliance with the Central Valley Project Improvement Act and converted the repayment of the San Felipe Division facilities from a water service contract to a repayment contract with fixed semi-annual payments. The semi-annual payments for January 2007 through July 2016 are $7.5 million. The semi-annual payments starting January 2017 is $7.7 million. The amended contract preserved the attributes of a water service contract for other Central Valley Project costs.

The total commitment, including applicable interest, of the repayment contract was $431.9 million. The remaining commitment as of June 30, 2020 was $210.4 million.

(c) Participation Rights in Storage Facilities

In December 1995, Valley Water entered into a water banking and exchange program with Semitropic Water Storage District and its Improvement Districts that entitles Valley Water to storage, withdrawal, and exchange rights for Valley Water's State Water Project supplies. Valley Water's share of the total program capital costs is $46.9 million based on a 35 percent vesting in the program. Valley Water pays the program capital costs when storing and recovering Tier 1 water. The agreement terminates in December 2035.

As of June 30, 2020, Valley Water has paid $49.8 million towards the base fee obligation of this agreement. Upon withdrawal by Valley Water of all 135,965 acre-feet or remaining Tier 1 water stored, Valley Water would have paid its share of the total program costs. The 2020 rate to retrieve Tier 1 water is $73.49 per acre-feet. During the first 10 years, Valley Water had a reservation for the full 35 percent allocation; by January 1, 2006, if Valley Water's contributions towards the program capital costs did not equal $46.9 million, Valley Water's permanent storage allocation would have been reduced. Valley Water decided to utilize its total allowable storage rights at 35 percent on January 1, 2006.

Valley Water currently has a storage allocation of 350,000 acre-feet. As of June 30, 2020, Valley Water has 344,662 acre-feet of water in storage. The participation rights are amortized using the straight-line method over the life of the agreement. Amortization of $28.7 million has been recorded through fiscal year 2020. Semitropic Water Storage District has reported elevated concentrations of 1, 2, 3 trichloropropane in some of its groundwater wells. There is currently insufficient information to conclude whether these detections could impact banking operations. Impacts could potentially include higher pumping, recovery, and treatment costs and possibly impaired recovery of banked water supplies.

(d) Partnership Agreement Between Valley Water, the City of Palo Alto, and the City of Mountain View to Advance Resilient Water Reuse Programs in Santa Clara County

On December 10, 2019, the Board approved an agreement between Valley Water and its local partners, the City of Palo Alto and Mountain View, to further develop water supplies and

infrastructure to meet the County's water supply needs. The three main parts of the agreement include: (1) funding a local salt removal facility, owned and operated by Palo Alto, to provide a higher quality of recycled water for irrigation and cooling towers, (2) an effluent transfer option to Valley Water for a regional purification facility (referred to as the "Regional Plant"), owned and operated by Valley Water, to provide advanced purified water for potable reuse, and (3) a water supply option for the cities of Palo Alto and Mountain View to request an additional supply if needed.

The financial impact to Valley Water includes funding the local salt removal facility in the amount of $16.0 million, which may be sourced as a component of the Expedited Purified Water Program. Valley Water will also pay $0.2 million per year, starting in year one to culminate in year thirteen, or at startup of the regional purification facility, whichever occurs first. Finally, Valley Water will pay $1.0 million per year for the effluent once startup of the regional purification facility has been initiated. All three payments will escalate annually based on the factors outlined in the partnership agreement and would be paid for water charge related revenues. Timing of such payments are still to be determined.

NOTE 17 - CONTINGENCIES

(a) Litigation

It is normal for a public entity like Valley Water, with its size and activities, to be a defendant, co-defendant, or cross-defendant in court cases in which money damages are sought. Discussed below are all pending litigations that Valley Water is aware of which are significant and may have a potentially impact on the financial statements.

Great Oaks Water Company v. Valley Water

In 2005, Great Oaks Water Company (hereinafter "Great Oaks") filed an administrative claim alleging that Valley Water's groundwater charges for 2005-06 violated the law and sought a partial refund. After its claim was deemed denied, Great Oaks filed a lawsuit alleging, among other things, that Valley Water's groundwater production charges violated Proposition 218 (which added Article XIIID to the California Constitution), because proceeds are used to fund projects and services that benefit the general public, not just ratepayers (*Great Oaks Water Company v. Santa Clara Valley Water District*, Santa Clara County Superior Court Case No. 2005-CV-053142; Cal. Court of Appeals Case Nos. HO35260 and HO35885; Cal. Supreme Court No. S231846 (the "Great Oaks Case"). Great Oaks also alleged that the groundwater production charges violated the Law. Great Oaks demanded a partial refund as well as declaratory, injunctive and mandamus relief.

On February 3, 2010, the trial court issued a Judgment After Trial in the Great Oaks case, ruling that Valley Water owed Great Oaks a refund of groundwater charges of approximately $4.6 million plus interest at 7% per annum. The award of pre-judgment interest amounted to approximately $1.3 million, and the court awarded post-judgment interest of $886.62 per day. Valley Water appealed this decision to the California Court of Appeal for the Sixth Appellate District (the "Court of Appeal"). During the pendency of the appeal, in accordance with the requirements of GASB Statement No. 62, Valley Water recorded a liability in the amount of the judgment plus interest. After the favorable judgement by the Court of Appeal in 2015, discussed below, Valley Water reversed its prior total recorded liability in the aggregate amount of $7.4million in its audited financial statements for Fiscal Year 2017.

In 2015, the Court of Appeal reversed in full the judgment of the trial court. The Court of Appeal found that Valley Water's groundwater production charges did not violate Proposition 218 or the Law. Great Oaks petitioned the California Supreme Court to review the Court of Appeal's ruling, and the Supreme Court granted its petition. The case was placed on hold pending the California Supreme Court's decision in a similar case, *City of Buenaventura v. United Water Conservation District* ("UWCD"). In late 2017, the California Supreme Court issued its opinion in the UWCD case, finding that Proposition 218 does not apply to groundwater charges, but that Article XIIIC of the California Constitution does apply. The Supreme Court vacated the Court of Appeal's decision and remanded the Great Oaks case for reconsideration in light of its UWCD opinion. On November 8, 2018, the Court of Appeal reaffirmed its 2015 decision. The Court of Appeal declined to consider Great Oaks' request to consider whether Valley Water's groundwater production charges violated Article XIIIC of the California Constitution, as this cause of action had never been considered by the trial court. This case was remanded to the trial court for further proceedings in February 2019.

While the 2005 Great Oaks case was pending, Great Oaks filed additional annual claims and additional annual lawsuits challenging Valley Water's groundwater production charges for each year after 2005, continuing through the present. Great Oaks' subsequent, similar lawsuits were stayed pending resolution of its 2005 case. (Santa Clara Superior Court Case Nos. 2007-CV-087884; 2008-CV-119465; 2008-CV-123064; 2009-CV-146018; 2010-CV-178947; 2011-CV-205462; 2012-CV-228340; 2013-CV-249349; 2015-CV-281385; 2016-CV-292097; 2017-CV-308140; and 2018-CV-327641). In addition, in 2011 Shatto Corporation, Mike Rawitser Golf Shop, and Santa Teresa Golf Club filed a similar refund action, making similar claims (Santa Clara Superior Court Case No. 2011-CV-195879). Other water retailers including San Jose Water Company and the cities of Morgan Hill, Gilroy and Santa Clara, and the Los Altos Golf and Country Club and Stanford University, dispute Valley Water's groundwater charges and entered into tolling agreements with Valley Water pending the final decision in the Great Oaks Case. In 2019, Valley Water filed a collection action against Shatto Corporation for failure to pay groundwater charges from 2009 to 2014 and associated penalties and interest. Valley Water estimates that the amount due is approximately $1.0 million. Shatto Corporation filed a cross-complaint, alleging that Valley Water's groundwater charges violate Article XIIIC of the California Constitution (Santa Clara Superior Court Case No. 2019-CV-348413).

Once the Great Oaks Case was remanded to the trial court in February 2019, the court lifted the stay over Great Oaks' subsequently filed cases, as well as the case brought by Shatto Corporation, Mike Rawitser Golf Shop, and Santa Teresa Golf Club. At the request of the trial court, in order to streamline resolution of the remaining issues this litigation and related litigation, the parties stipulated and agreed to the filing of a new, omnibus complaint. On June 12, 2020, the proposed omnibus "Master Complaint" of plaintiffs Great Oaks and Shatto Corporation was approved for filing and filed under Santa Clara Superior Court Case No. 2011-CV-205462. Great Oaks alleges that Valley Water's groundwater production charges violate Proposition 26, and that Valley Water does not levy or collect groundwater charges from agricultural pumpers but instead uses property taxes to pay these charges. See Note (17) Subsequent Events, regarding Valley Water's settlement with Shatto Corporation.

In the event that a court rules that Valley Water's groundwater production charges violate Proposition 26, such a ruling could materially impact Valley Water's rate revenue and finances.

Flooding in the City of San Jose

Following a series of storms, a flood event occurred on the Coyote Creek in San Jose, California on or about February 21, 2017. The Coyote Creek is approximately 42 miles long and is the longest creek in the County. In the southern portion of the County, Valley Water owns and maintains the Leroy Anderson Dam and Reservoir along the Coyote Creek near Morgan Hill, California. The Anderson Dam is upstream from the City of San Jose. After the reservoir reached capacity, water began going over the Anderson Dam spillway on February 18, 2017. The spillover volume peaked on the morning of February 21, 2017, increasing flows on Coyote Creek. Beginning on or about February 21, 2017, certain residential and non-residential areas of San Jose along Coyote Creek experienced flooding due to rising water levels in the creek. Thousands of residents were temporarily evacuated, and numerous properties experienced flood damage. Such flood water receded within a short period of time after February 21, 2017.

As of the date of this Official Statement, Valley Water has received 423 claims with respect to the flooding along Coyote Creek. Estimated damages are in excess of $10.0 million; however, Valley Water cannot predict the final amount of any proven damages. Many of the claimants are also seeking recovery from the City of San Jose; therefore, a portion of the aggregate stated value of the claims may be apportioned to the City of San Jose.

A number of claimants have filed lawsuits in Santa Clara County Superior Court against Valley Water and the City of San Jose alleging damage from the Coyote Creek flood event. Currently, 20 lawsuits have been filed and 19 are pending against Valley Water relating to the flood event (one case was dismissed). Valley Water is evaluating all of such claims and lawsuits and cannot predict the outcomes or financial impacts of these or any future claims and lawsuits with respect to the Coyote flood event. Valley Water intends to vigorously defend any actions brought against it with respect to flood-related property damage caused by the flooding along Coyote Creek. Valley Water has filed a motion to remove all 19 pending cases from the State Superior Court to federal court. A hearing on the removal motion has been set for September 1, 2020.

Of the 423 claims, 192 of the claimants have not filed an action in superior court. As to these 192 claims, Valley Water settled 162 of such claims in September 2019 at a total cost of approximately $0.7 million.

On September 30, 2020, Pacific Gas & Electric Corporation filed a civil action against Valley Water claiming personal property damages as a result of flooding resulting from a series of storms occurring on or about February 21, 2017.

On or about June 14, 2018, San Jose Unified School District filed a civil action against Valley Water claiming property damages as a result of flooding resulting from a series of storms occurring on or about February 21, 2017.

(b) Grants and Subventions

Valley Water has received federal and state grants for specific purposes that are subject to review and audit. Although such audits could result in expenditure disallowances under grant terms, any required reimbursements are not expected to be material.

(c) Central Valley Project

On June 7, 1977, Valley Water entered into a contract with the U.S. Bureau of Reclamation for water service from the San Felipe Division of the Federal Central Valley Project (CVP). The CVP water service provides for both agricultural operation and maintenance (O&M) and municipal and industrial (M&I) water deliveries to the District up to a total maximum annual entitlement of 152,500 acre-feet per year. The contract specified initial water rates for O&M and M&I water service and provided for periodic adjustments for the respective water rates in accordance with prevailing CVP water rate policies commencing in the year 1993 for the in-basin M&I rate component; 1996 for the agricultural O&M rate component; 2001 for the full agricultural water rate; and 2008 for the out-of-basin M&I rate component. The methodology of CVP water rate setting has historically recovered current year operating costs and the applicable construction costs over 50 years.

In compliance with the Central Valley Improvement Act (CVPIA), the District entered into negotiations, along with all other CVP contractors, with the U.S. Bureau of Reclamation for contract renewal. Because of concerns related to litigation challenging the renewal process, Valley Water entered into an amended contract. The amendment maintained the basic provisions of the original contract, implemented provisions of CVPIA, and allowed the establishment of a fixed repayment for the San Felipe Division facilities.

(d) Perchlorate

In 2003, perchlorate released from the Olin Corporation facility at Tennant Avenue in Morgan Hill was discovered in groundwater in much of the Llagas Subbasin in South County, impacting many water supply wells. The investigation and clean-up of the contamination are under the jurisdiction of the Central Coast Regional Water Quality Control Board. Due to ongoing remediation by Olin and managed recharge by Valley Water, both the plume size and number of wells impacted have been reduced. As of June 2019, perchlorate was present above the Maximum Contaminant Level (MCL) in fewer than 10 domestic water supply wells. As of June 2020, perchlorate is present above the MCL in fewer than 5 domestic water supply wells. The perchlorate plume exceeding the MCL extends south from the Tennant Avenue site for about 3 miles. Olin's remedial efforts have included on-site soil removal and groundwater treatment as well as off-site plume remediation. Since this issue is no longer of legal significance, it will not be reported in next year's Comprehensive Annual Financial Report.

(e) Rinconada Water Treatment Plant Upgrade

On May 26, 2015, the Board awarded a $179.9 million construction contract to Balfour Beatty Infrastructure, Inc. ("Balfour Beatty") for the Rinconada Water Treatment Plant (WTP) Reliability Improvement Project. Phase 2 of such project includes the construction of several new facilities for the upgraded treatment system at the Rinconada WTP, including flocculation/sedimentation, ozone generation, and washwater recover facilities. Such project also includes the installation of an electrical control building and appurtenant wiring and control systems, significant underground piping, and installation of chemical feed systems.

Valley Water's contract with Balfour Beatty provided for the project to be built in five phases within a 5-year period. The existing Rinconada WTP is to remain operational during the entire

construction period, with the newly constructed facilities and upgrades integrated with plant operations at the end of each phase.

Balfour Beatty's current estimated completion date of Phase 2 work is more than two years later than originally provided in the construction schedule. Valley Water advised Balfour Beatty of Valley Water's concerns regarding quality of construction work, the failure to comprehensively remedy construction defects, and Balfour Beatty's lack of diligence to ensure progress is made in a timely manner. On March 10, 2020, Valley Water and Balfour Beatty entered into an amendment to their original construction contract ("Amendment One") pursuant to which the scope of work was reduced such that Balfour Beatty only responsible for completing Phase 2 of the project and not the later phases, as originally agreed upon. Amendment One reduced the contract amount by approximately $39.8 million. Balfour Beatty Infrastructure Inc. has completed the scope of work described in Amendment One. On January 12, 2021, Valley Water accepted the work as complete and will submit the Notice of Completion for recording with the County of Santa Clara Clerk/Recorder. As a result of Valley Water's delay in accepting the completed project, Balfour Beatty filed a California Government Code Claim pursuant to section 900 et. seq. on December 7, 2020 alleging entitlement to monetary compensation for Valley Water's breach of contract and violation of Public Contract Code section 7107 relating to the timely release of contract retention, which is approximately $7.4 million.

(f) Factors Affecting Water Supply

Valley Water has access to several sources of water, both imported and local, which provides flexibility in managing its water supplies to meet the needs of the County. Under normal water conditions, Valley Water imports about half of its water supply under contracts with the California State Water Project (SWP) and the federal CVP, and obtains the other half from local surface water and groundwater resources. Certain water retailers in the County may also import water from the San Francisco Public Utility Commission's (SFPUC) Regional Water System, have their own local surface water supplies, and/or can deliver recycled water. To address factors which may impact these water supplies, Valley Water has undertaken several planning efforts focused on identifying strategies to safeguard the reliability and sustainability of County and State-side water resources on which Valley Water relies, assessing risks from climate change, economic and regulatory uncertainties, environmental and social conflicts, and other considerations.

Valley Water completed its 2015 Urban Water Management Plan ("UWMP") on June 20, 2016 (District Resolution No. 16-50), pursuant to California Water Code Sections 10610 through 10657 (the Urban Water Management Planning Act). The Urban Water Management Planning Act requires urban water suppliers such as Valley Water to review, update and adopt an UWMP at least every five years. Valley Water's current UWMP was prepared in coordination with water retailers (who also must prepare their own UWMPs), the County, and local cities and towns. Valley Water's 2015 UWMP updated water demand projections based upon increases in population and job growth to 2040 as projected by local water retailers. The 2015 UWMP also presented water supply projections and included Valley Water's Water Shortage Contingency Plan to address dry year objectives and operations. Completion of UWMP updates allows Valley Water to remain eligible for state water bank assistance and for state grant funding. The next UWMP update cycle is scheduled for development and completion by July 2021.

A key finding of the 2015 UWMP was that Valley Water must make significant investments to maintain and safeguard existing water supplies, infrastructure, and programs to ensure a reliable water supply into the future. These investments were described in Valley Water's Water Supply Master Plan 2040 approved by the Board in November 2019 (the "Water Supply Master Plan").

The Water Supply Master Plan recommends a three-prong strategy to ensure a reliable water supply through 2040: secure existing supplies and infrastructure, increase water conservation and water reuse, and optimize the use of existing supplies and infrastructure. The process of developing the Water Supply Master Plan involved evaluating groups of water supply projects and programs to achieve long-term water supply reliability targets. The preliminary 100-year lifecycle cost projections for the water supply projects and programs considered in the Water Supply Master Plan ranges from less than $100 million to over $1 billion and are over $2.3 billion in the aggregate. The impact of the implementation of the various groups of water supply projects and programs on Valley Water's water supply reliability are provided in the Water Supply Master Plan. Through a Monitoring and Assessment Program ("MAP"), Valley Water expects to continue implementation planning for the Water Supply Master Plan projects. The MAP report summarizes changes in demand forecasts, project descriptions, and water supply reliability analyses and is present to the Board annually.

The Board approved an updated long-term water supply reliability level of service goal on January 14, 2019. The goal is to develop supplies to meet at least 100 percent of annual water demand identified in the Water Supply Master Plan during non-drought years and at least 80 percent of annual water demand in drought years. The projects identified in the Water Supply Master Plan, along with the baseline supplies and infrastructure, is projected meet the water supply reliability level of service goals, even though there are small supply shortages in demand year 2030. The Water Supply Master Plan provides that such small shortages, if they materialize, will be managed by short-term water purchases rather than additional capital projects. The objectives and projects in the Water Supply Master Plan are incorporated into the Capital Improvement Program.

Endangered Species Act Issues

Valley Water's imported and local supplies are subject to regulatory restrictions due to implementation of the federal Endangered Species Act ("ESA") and the California Endangered Species Act ("CESA"). The listing of winter-run Chinook salmon in 1989 and delta smelt in 1993 resulted in pumping restrictions imposed on the State and federal water projects to protect these species. These pumping restrictions resulted in reduced deliveries from the SWP and CVP, compounding the shortages created by the on-going drought at the time. In 1993, the United States Environmental Protection Agency (the "EPA") also proposed to implement water quality standards for the Bay-Delta that would impose severe restrictions on the operation of the SWP and CVP. These circumstances led to the Bay-Delta Accord in 1994, in which the State and federal governments, along with urban, agricultural and environmental interests, agreed to an interim set of ESA protection measures coupled with water supply certainty. The Bay-Delta Accord laid the groundwork for the establishment of the CALFED Bay-Delta Program, which has been succeeded by a number of efforts, including the California Water Action Plan, the Delta Reform Act and Delta Plan, and the proposed Delta Conveyance Project to develop a long-term solution for conflicts in the Bay-Delta. However, there has been significant recent litigation concerning ESA and CESA issues and water moving through the Delta for export to contractors.

Various legal actions have been filed, and are anticipated to be filed, involving the conveyance of water through the Delta by DWR, via the SWP, and by USBR, via the CVP.

2019 Revised Federal Biological Opinions Litigation. Three significant lawsuits have been filed against the United States challenging as unlawful, revised biological opinions ("BOs") issued in October 2019 by the National Marine Fisheries Service ("NMFS") and the United States Fish and Wildlife Service ("FWS"). The State (though its natural resources agencies) filed one of these lawsuits in February 2020 (*California Natural Resources Agency, et al. v. Ross*). Another lawsuit

was filed by environmental groups in December 2019 (*Pacific Coast Federation of Fishermen's Association, et al. v. Ross*), and a third lawsuit was filed by other environmental groups, the Central Delta Water Agency and the South Delta Water Agency in May 2020, (*AquaAlliance et al. v. United States Bureau of Reclamation*). These cases have been consolidated before Judge Drozd in the United States District Court for the Eastern District of California, Case Nos. 20-cv-00431, 20-cv-00426, and 20-cv-00878.

The foregoing three lawsuits allege violation of the Administrative Procedure Act ("APA"), the ESA and the National Environmental Policy Act ("NEPA"). Such cases arise from the BOs and associated permits issued by the FWS and NMFS under the ESA for the long-term, coordinated operations of the CVP and the SWP, and USBR's reliance upon those opinions and permits. For the last decade, the SWP and CVP operations have been controlled by a pair of BOs issued in 2008 and 2009 by FWS and NMFS, respectively, and their reasonable and prudent alternatives ("RPAs"). On August 2, 2016, the USBR and DWR requested re-initiation of consultation for coordinated long-term operations due to new information learned after multiple years of drought, low populations for listed species and new scientific information. DWR and USBR worked to refine operations of the SWP and CVP to reflect water quality regulations, existing ESA restrictions, updated hydrology, developing scientific data, and enhanced real-time monitoring capacity. In January of 2019, USBR issued a Biological Assessment that proposed a new long-term operating plan that would control through 2030. On July 1, 2019, NMFS released a draft BO that found the proposed plan would cause jeopardy and included an RPA. DWR and USBR continued to work with the FWS and NMFS to refine the proposed operations to prevent jeopardy. On October 21, 2019, NMFS and FWS issued new BOs that concluded that the long-term operations plan would not cause jeopardy. On February 19, 2020, USBR completed its NEPA review of the long-term operating plan and issued a Record of Decision adopting the October 2019 BOs.

In these cases, the State and environmental groups allege that NMFS and FWS violated the APA in reaching no jeopardy conclusions in the October 2019 BOs. The State and such environmental groups also allege that USBR violated the ESA by relying on the BOs and that USBR failed to comply with NEPA in issuing its Record of Decision.

Many water agencies, districts, authorities and other government entities have either intervened in these cases or have filed motions to intervene that remain pending. These include, for example, the State Water Contractors association ("SWC"), San Luis & Delta-Mendota Water Authority, Westlands Water District, Tehama-Colusa Canal Authority, Sacramento River Settlement Contractors.

In two cases, the State and environmental groups brought motions for a preliminary injunction seeking to prevent USBR from implementing the new long-term operations plan and asking the court to require the federal defendants to abide by the 2008 and 2009 BOs pending a determination on the merits of their claims. The Court granted the preliminary injunction for one aspect of the operations plan for a limited amount of time in May 2020 and denied the preliminary injunction for all other aspects.

Depending on the outcome of the litigation, SWP and CVP water supplies may be slightly higher or remain similar to levels from 2009 through 2019 under the 2009 biological opinion.

California Incidental Take Permit and SWP Long-Term Operations EIR Litigation. To Valley Water's knowledge, between five to seven lawsuits have been filed against the State in three or four different Superior Courts by State and federal water contractors and by environmental groups concerning the DWR's March 2020 Final Environmental Impact Report ("EIR") and the California

Department of Fish and Wildlife's ("CDFW") Incidental Take Permit ("ITP") for the long-term operation of the SWP. Under CESA, DWR is required to obtain an ITP to minimize, avoid and mitigate impacts to threatened or endangered species, including the Delta Smelt and other fish species, as a result of SWP operations. In past years, DWR obtained coverage for SWP operations under CESA by securing a "consistency determination" from CDFW based on BOs issued by the NMFS and FWS. In 2018, as federal agencies were working to update their BOs, President Trump issued a Presidential Memorandum to accelerate their completion. In February 2019, DWR and CDFW announced that they would pursue a separate State permit to ensure the SWP's compliance with the CESA.

In November 2019, DWR issued its draft EIR for long-term operations of the SWP. The draft EIR found that the project would have no significant environmental impacts. However, the draft EIR also discussed several project alternatives, including "Alternative 2[b]-Proposed Project with Dedicated Water for Delta Outflow from SWP." In December 2019, DWR applied to CDFW for an ITP under the CESA. Despite the draft EIR finding of no significant impact, in its ITP application, DWR described the project in terms closer to Alternative 2b than what it had originally proposed. On March 27, 2020, DWR certified its final EIR, which adopted "Refined Alternative 2b" as the approved project. However, "Refined Alternative 2b" includes several project components that were neither described in the original project description nor in Alternative 2b. In announcing its final EIR, DWR also announced that it does not expect long-term SWP operations to result in an increase in the amount of water exported south of the Delta as compared to that under the prior 2008/2009 federal BOs. On March 31, 2020, CDFW issued an ITP consistent with the final EIR. The ITP and Final EIR will significantly limit exports in wetter years as compared to what is allowed under the 2019 revised federal BOs, with potential reductions of up to 400,000 acre-feet in April and May. The EIR and ITP apply only to SWP operations, not CVP operations.

In April 2020, Metropolitan Water District and Mojave Water Agency jointly filed suit against the State in Fresno Superior Court, as did the San Luis & Delta Mendota Water Authority, Friant Water Authority, and the Tehama Colusa Canal Authority. SWC and Kern County Water Agency jointly filed another lawsuit. These lawsuits allege, among other things, that the State violated CEQA or CESA by: (a) changing the project description after the draft EIR and certifying new "Refined Alternative 2b" without adequate disclosure or public comment; and (b) failing to use the best available science and requiring unnecessary and unjustified fish avoidance and mitigation measures. Metropolitan Water District and Mojave Water Agency also allege in their lawsuit that the State breached its SWP contract by agreeing to mitigation measures stronger than necessary under the CESA, reducing the amount of water that will be delivered and increasing charges. In contrast, the Sierra Club, Center for Biological Diversity and two other environmental groups jointly filed suit against the State in San Francisco Superior Court, alleging that the final EIR and ITP violate the Delta Reform Act and CEQA and do not go far enough in protecting threatened fish species. The Sierra Club, Center for Biological Diversity and the environmental groups allege that the final EIR And ITP allow too much water to be exported south of the Delta and fail to account for the cumulative impacts of SWP operations. Finally, they allege DWR violated CEQA by failing to analyze the Delta Conveyance Facility, the single tunnel project proposed by Governor Newsom. The foregoing lawsuits could be coordinated and consolidated.

The final EIR and ITP could result in less SWP water being exported south of the Delta than would otherwise be authorized under the 2019 revised federal BOs. Valley Water cannot determine at this time whether the final EIR and ITP will result in less SWP water being delivered to contractors than had been delivered for 11 years under the former (2008 and 2009) federal BOs.

Bay-Delta and Imported Water Litigation

Delta Stewardship Council Delta Plan Litigation. In 2013, the federal government, SWP contractors, including Valley Water, and several environmental groups, filed suit against the Delta Stewardship Council ("DSC"), challenging its Bay-Delta Plan. The Delta Reform Act of 2009 ("DRA") established the co-equal goals of restoring the Bay-Delta ecosystem and increasing the reliability of Delta water supplies. The DRA also created the DSC, which was charged with developing a plan that accomplishes these goals. SWC and Valley Water allege that the Bay-Delta Plan violates the DRA because, among other things, its Regulation WR P1 provides that the DSC may reject any projects involving water moving through the Bay-Delta if local agencies do not demonstrate efforts to reduce local water demand, improve efficiency and/or increase local water supplies. Environmental groups sued the DSC alleging that the Bay-Delta Plan violates the DRA because it does not set forth enforceable, quantified minimum water flows or other measurable objectives. The trial court held that the Bay-Delta Plan violated the DRA because it did not set forth quantified water flow objectives or other measurable limits.

In 2020, the Court of Appeal issued an opinion rejecting the arguments of both the SWP contractors and environmental groups, holding that the Bay-Delta Plan does not violate the DRA. The Court of Appeals rejected the SWP contractors' arguments that the Bay-Delta Plan exceeded the DSC's jurisdiction by regulating local water agencies and local water use by requiring agencies to demonstrate reduced reliance on the Delta, as well as their other arguments. The Court of Appeals also rejected the argument that the Bay-Delta Plan violates the DRA because it does not contain quantified or measurable water flow limits or targets. The Court of Appeals' decision could impact SWP contractors' ability to participate in multi-year water transfers if a SWP contractor, such as Valley Water, is unable to demonstrate reduced reliance on imported Delta water to the satisfaction of the DSC, which may require proof of local retail water agencies or purveyors showing reduced reliance on imported water. However, single-year water transfers are not impacted, as the DRA expressly exempts such transfers.

Bay-Delta Water Quality Control Plan Phase 1 Amendments Litigation. In late 2018, the SWRCB released its "Phase 1" amendments to the San Francisco Bay/Sacramento - San Joaquin Delta Estuary Water Quality Control Plan ("Bay Delta WQCP"), which addressed water quality objectives on the Lower San Joaquin River, its tributaries, and the southern Delta. Phase 2 amendments will focus on the Sacramento River, its tributaries and the northern and central Delta. Among other things, the Phase I amendments require an adaptive 30% – 50% unimpaired flow requirement on all major tributaries to the San Joaquin River, including the Tuolumne River, from which the SFPUC Hetch-Hetchy system obtains its water supplies. The SWRCB announced that it anticipates in forthcoming Phase 2 amendments concerning the Sacramento River and its tributaries and north and central Delta, that it expects to impose a higher, adaptive 45% – 65% unimpaired flow requirement.

Approximately 24 entities, including Valley Water, filed suit against the SWRCB in 13 lawsuits concerning the Phase I Bay-Delta WQCP amendments. Such lawsuits have been consolidated in Sacramento Superior Court in Case No. JCCP 5013. Several water and irrigation districts, environmental groups, the cities of San Francisco and Modesto, the United States, and one Indian tribe are plaintiffs/petitioners. The public agency plaintiffs allege that the flow requirements are arbitrary and capricious, not based on the best available science, or are too restrictive of, or alter, water rights; and the environmental groups allege they are not protective of fish enough. This consolidated litigation is in an early stage. Valley Water's expects to file a dismissal in this matter and to address the issues raised in the lawsuit through a voluntary agreement process. The Phase

1 amendments as well as the anticipated Phase 2 amendments could reduce the supply of imported water available to Valley Water, SFPUC, and other State and federal water contractors.

Litigation Relating to Monterey Amendments to SWP Contract. In late 1994, SWP contractors and DWR entered into an agreement in Monterey to substantially amend the standard SWP contract. In 1995 the first of several CEQA lawsuits challenging the "Monterey Amendments" was filed after a SWP contractor prepared an EIR for these amendments. That case settled after DWR agreed to prepare a new EIR for the Monterey Amendments, which was named the "Monterey Plus" project. In 2010, DWR certified its final Monterey Plus EIR. Central Delta Water Agency and several NGOs filed suit against DWR thereafter (Sacr. Sup. Ct. Case No. 34-2010-80000561) ("*Central Delta I*"), alleging that the Monterey Plus EIR violated CEQA because it failed to provide an adequate description of the project and its impacts, failed to adequately analyze alternatives and mitigation measures, contained inadequate responses to public comments, and was not properly circulated. The plaintiffs also alleged that DWR's CEQA findings were not supported by substantial evidence. A related lawsuit was filed, *Rosedale-Rio Bravo Water Storage District v. DWR* (Sacr. Sup. Ct. Case No. 34-2010-80000703), alleging only that the Monterey Plus EIR failed to adequately analyze the operations of the proposed Kern Water Bank). Finally, the Central Delta Water Agency filed a second, separate lawsuit challenging the validity of the transfer of the Kern Water Bank from the Kern County Water Agency to the Kern Water Bank Authority (Sacr. Sup. Ct. Case No. 34-2010-80000719, "*Central Delta II*"). These three actions were ordered related and assigned to a Sacramento Superior Court Judge. *Central Delta II* has been stayed pending resolution of *Central Delta I*.

In a decision in 2014 in *Central Delta I* and *Rosedale-Rio Bravo*, the court upheld the majority of the Monterey Plus EIR. However, the court found that the Monterey Plus EIR did not sufficiently analyze or address the operation of the Kern Water Bank and issued a writ for DWR to further analyze its operations and recertify the Monterey Plus EIR. The *Central Delta I* plaintiffs appealed the rejection the CEQA claims (Ct. of App. 3d. Dist. Case No. C078249). The parties completed appellate court briefing in July of 2016. This case remains pending, as the Court of Appeal has not yet issued a decision.

As ordered by the trial court, DWR conducted further environmental review of the Kern Water Bank, and, in 2016, issued its revised EIR: "Monterey Plus — Kern Water Bank Development and Continued Use Operation." The Center for Food Safety and other NGOs (represented by *Central Delta I & II*'s counsel) filed suit shortly thereafter, alleging various CEQA violations (*Center for Food Safety v. DWR*, Sacr. Sup. Ct. Case No. Case No. 34-2016-800002469). The court denied all of plaintiffs' claims in an order and judgment in October 2017, and plaintiffs appealed. The parties completed appellate court briefing approximately 20 months ago, and this action is also pending in the Court of Appeal (Ct. of App. 3d Dist. Case No. C086215).

DWR SWP Contract Long-Term Extension Validation Action. DWR filed a validation action in Sacramento County Superior Court in 2018 (Sacr. Sup. Ct No. 34-2018-00246183) to validate the legality of its approval of long-term extensions of all SWP contracts, including Valley Water's contract. A judgment in favor of DWR would provide that the matters contained therein are in conformity with applicable law, as set forth in such validation action. However, there can be no assurance that a court exercising equitable powers or judicial discretion would not hear an action challenging the matters set forth in such judgment. In February 2019, Valley Water filed an answer supporting DWR's allegations, as did several other SWP contractors. However, several environmental groups and counties and districts filed answers or separate actions opposing DWR's approval, asserting that the approval violates CEQA, the Public Trust Doctrine and the DRA. This

case is in its initial procedural stage. All cases have been consolidated and assigned to Judge Culhane, and the administrative record is being prepared.

Oroville Spillway Environmental Damage Cases. In response to record rainfall in early 2017, DWR's Oroville Dam filled and excess water ran down its spillway (as designed). The spillway, however, failed and caused water and debris to be released, uncontrolled, into the Feather River. The District Attorney of Butte County (People of State of CA v. DWR) and other individuals and entities have filed suit for environmental damage or property damage resulting from the spillway failure. These cases have been consolidated in Sacramento Superior Court Case No. JCCP 4974. The Butte County District Attorney is seeking $51.0 billion in damages ($25k/day penalty + $10/pound of spillway and materials discharged into river) under Cal. Fish & Game Code § 5650. Although Article 13(b) of the SWP contract provides that contractors are not liable for DWR's operation or maintenance of SWP structures or facilities before their turnouts, DWR maintains that ultimately, regardless of legal liability, all costs of the SWP system must be borne by SWP contractors rather than the general public, and thus DWR may bill contractors or raise SWP costs to recover expenditures related to this litigation (cost of litigation, settlements, damages awards/verdicts). If a judgment in this case resulted in the award in the amount of the maximum damages being sought by Butte County and it was determined that DWR could recover these costs from SWP contractors, Valley Water's share could be approximately $1.3 billion. Valley Water cannot predict the outcome of this litigation or the damages in the event that Butte County prevails.

DWR's cost estimate for the Oroville Spillways Emergency Recovery Project is currently $1.1 billion, but no determination has been made as to the amount for which SWP contractors will ultimately be responsible. The Federal Emergency Management Agency's ("FEMA") Public Assistance program allows for the reimbursement of up to 75 percent of eligible costs for federally declared disasters. As a result, DWR has issued debt for 25 percent of total project costs, resulting in an annual increase of about $0.6 million to Valley Water's Statement of Charges. To date, FEMA has reimbursed DWR for approximately 50 percent of total project costs and DWR is considering appeal of this decision. If DWR is not successful in obtaining further reimbursement from FEMA and instead issues debt to be repaid by SWP contractors, Valley Water's share of project costs could increase by an additional $0.6 million per year.

Valley Water cannot predict the outcome of these Delta-related cases. However, Valley Water believes that any new decision or order by a State or federal court related to one or more of the above-described biological opinions and leading to adverse decisions reducing State Water Project and/or Central Valley Project supplies would not have a material impact on Valley Water's ability to pay debt service on the 2020 Bonds or the Installment Payments.

NOTE 18 - SUBSEQUENT EVENTS

Subsequent events have been evaluated through January 13, 2021.

On or about October 7, the District and Shatto Corporation entered into a settlement agreement by which both parties dismissed with prejudice all actions each had against the other. Shatto will pay Valley Water $1.1 million.

On October 14, 2020, Valley Water closed on a debt issuance to finance capital improvement costs for the water utility system. The financing was authorized by Valley Water's Board of Directors at its September 8, 2020, regular meeting. Total debt proceeds of $216.0 million plus $20.0 million of original issue premium were used to repay $99.3 million of commercial paper that was issued as

interim financing for previously-incurred costs (Water System Refunding Revenue Bonds, Series 2020A/B) and generate $135.0 million of new money proceeds to fund eligible capital costs over the next one to two years (Revenue Certificates of Participation, Water Utility System Improvement Projects, Series 2020AC/D). Valley Water received 'AA+' and 'Aa1' credit ratings on the debt from Fitch and Moody's respectively. The debt obligations will be repaid over 30 years at fixed rates. Valley Water achieved very favorable pricing with an aggregate, all-in true interest cost of 2.69% and achieved budgetary debt service savings of approximately $5.0 million for the new fiscal year.

On October 15, 2020, Valley Water submitted a letter of interest (LOI) for the Pacheco Reservoir Expansion Project to the U.S. Environmental Protection Agency (EPA) for a loan under its Water Infrastructure Finance and Innovation Act (WIFIA) loan program. The LOI described the project and its community benefits in detail and provided information on the creditworthiness of Valley Water as a borrower. The EPA will announce in 3 months which projects across the national are invited to apply for a WIFIA loan. The federal WIFIA loan program, previously identified by Valley Water as a preferential, low-cost option for borrowing funds to finance the development, design, and construction of the project, can fund up to 49% of eligible capital costs. In its notice of funding availability, the EPA estimated that its budget authority for its fiscal year ending September 30, 2021 may provide for approximately $5.0 billion in loans to selected projects, with additional funding possibility available from prior year carryover resources.

On October 30, 2020, Valley Water executed and delivered a Certificate Purchase and Reimbursement Agreement (the "Reimbursement Agreement") dated October 1, 2020 by and among Valley Water, the Corporation, U.S. Bank National Association as administrative agent and sole lead arranger of the other three lenders that are parties thereto (each as lender and together, the "Lenders"). Under the Reimbursement Agreement, Valley Water may issue up to $170.0 million of Santa Clara Valley Water District Revolving Certificates, Series C (Tax-Exempt) and Series D (Taxable) (the "Revolving Certificates") to be purchased by the Lenders. The TRANs secures the Revolving Certificates on a parity with the Commercial Paper Certificates. The Reimbursement Agreement currently expires on October 27, 2023. As of the publication date of the CAFR, Valley Water has not issued any Revolving Certificates pursuant to the Reimbursement Agreement. The Reimbursement Agreement has a three-year term through October 27, 2023, with renewal options pursuant to Board Resolution 20-11 adopted by the Valley Water Board on April 28, 2020.

On November 3, 2020, the Measure S parcel tax met the two-thirds supermajority vote required for approval with a voter passing result of 75.64%. The measure to renew the Safe, Clean Water and Natural Flood Protection Program which ensures public health and safety by protecting drinking water supply, reducing toxins and contaminants, and providing flood protection, renews Valley Water's existing parcel tax, without increasing rates, and averages $.006 per square foot annually. Passage of this measure is estimated to generate an estimated $45.5 million per year for Valley Water.

On December 7, 2020, Balfour Beatty filed a California Government Code Claim pursuant to section 900 et. Seq. alleging entitlement to monetary compensation for Valley Water's breach of contract and violation of Public Contract Code section 7107 relating to timely release of contract retention on the Rinconada Water Treatment Plant Upgrade, which is approximately $7.4 million. On January 12, 2021, the District has accepted the work as complete.

Required Supplementary Information

VALLEY WATER
Schedule of Changes In Net Pension Liability and Related Ratios
June 30, 2020
Last 10 Years*
(Dollars in Millions)

	2015	2016	2017	2018	2019	2020
Total pension liability						
Service cost	$ 14.3	$ 13.7	$ 13.8	$ 15.7	$ 16.0	$ 16.5
Interest on total pension liability	46.3	48.8	51.1	53.1	54.9	58.4
Differences between expected and actual experience	-	(0.2)	(3.2)	(4.7)	(1.4)	13.3
Changes in assumptions	-	(12.0)	-	44.3	(8.1)	-
Benefit payments, including refunds of employee contributions	(25.0)	(27.8)	(30.4)	(32.5)	(35.3)	(38.4)
Net change in pension liability	35.6	22.5	31.3	75.9	26.1	49.8
Total pension liability, beginning	622.2	657.8	680.3	711.6	787.5	813.6
Total pension liability, ending (a)	$ 657.8	$ 680.3	$ 711.6	$ 787.5	$ 813.6	$ 863.4
Plan fiduciary net position						
Contributions - employer	$ 13.8	$ 15.2	$ 17.0	$ 19.0	$ 20.1	$ 26.6
Contributions - employee	9.0	6.2	6.6	6.6	7.0	7.6
Net investment income	75.7	11.5	2.8	56.5	47.2	39.3
Benefits payment	(25.0)	(27.8)	(30.4)	(32.5)	(35.3)	(38.4)
Administrative expenses	-	(0.6)	(0.3)	(0.7)	(0.9)	(0.4)
Other miscellaneous income / (expenses)	-	-	-	-	(1.6)	-
Net change in fiduciary net position	73.5	4.5	(4.3)	48.9	36.5	34.7
Plan fiduciary net position, beginning	434.7	508.2	512.7	508.4	557.3	593.8
Plan fiduciary net position, ending (b)	$ 508.2	$ 512.7	$ 508.4	$ 557.3	$ 593.8	$ 628.5
Net pension liability, ending (a - b)	$ 149.6	$ 167.6	$ 203.2	$ 230.2	$ 219.8	$ 234.9
Plan fiduciary net position as a percentage of total pension liability	77.26%	75.36%	71.44%	70.77%	72.98%	72.79%
Covered payroll	$ 77.9	$ 78.0	$ 79.6	$ 84.1	$ 88.5	$ 92.1
Net pension liability as a percentage of covered payroll	192.04%	214.87%	255.28%	273.72%	248.36%	255.05%
Discount rate	7.50%	7.65%	7.65%	7.15%	7.15%	7.15%

** Fiscal year 2015 was the first year of GASB 68 implementation, therefore only 6 years are shown.*

VALLEY WATER
Schedule of Employer Pension Contributions
June 30, 2020
Last 10 Years*
(Dollars in Millions)

	2015	2016	2017	2018	2019	2020
Actuarially determined contribution	$ 13.9	$ 16.5	$ 18.6	$ 19.7	$ 22.6	$ 25.4
Contributions in relation to the actuarially determined contribution	(13.9)	(16.5)	(18.6)	(19.7)	(26.1)	(29.4)
Contribution Deficiency/(Excess)	$ -	$ -	$ -	$ -	$ (3.5)	$ (4.0)
Covered payroll[1]	$ 78.0	$ 79.6	$ 84.1	$ 88.5	$ 92.1	$ 95.0
Contribution as a percentage of covered payroll	17.82%	20.73%	22.12%	22.26%	24.54%	26.74%

[1] The covered payroll noted on this page is different from the covered payroll presented on the previous page as the previous page is payroll related to the net pension liability in the applicable measurement period.

The covered payroll for the current year is from the actuarial valuation study using a prior year measurement date, adjusted to the current year using a 3% increase.

** Fiscal year 2015 was the first year of GASB 68 implementation, therefore only 6 years are shown.*

VALLEY WATER

Schedule of Changes In Net OPEB Liability and Related Ratios

June 30, 2020

Last 10 Years*

(Dollars in Millions)

	2018	2019	2020
Total OPEB liability			
Service cost	$ 2.9	$ 2.9	$ 2.6
Interest on total OPEB liability	12.0	12.5	12.9
Effect ot change in actuarial assumptions/methods	-	-	(5.5)
Benefits payment	(8.5)	(8.9)	(10.1)
Other liability experience loss / (gain)	-	-	(8.0)
Net change in OPEB liability	6.4	6.5	(8.1)
Total OPEB liability, beginning	167.8	174.3	180.8
Total OPEB liability, ending (a)	$ 174.2	$ 180.8	$ 172.7
Plan fiduciary net position			
Contributions	$ 11.5	$ 11.9	$ 10.1
Benefits payment	(8.5)	(8.9)	(10.1)
Expected investment income	6.2	7.1	7.8
Investment experience (loss) / gain - differences between expected and actual experience	2.9	0.8	(1.2)
Net change in fiduciary net position	12.1	10.9	6.6
Plan fiduciary net position, beginning	84.5	96.6	107.5
Plan fiduciary net position, ending (b)	$ 96.6	$ 107.5	$ 114.1
Net OPEB liability, ending (a - b)	$ 77.6	$ 73.3	$ 58.6
Plan fiduciary net position as a percentage of total OPEB liability	55.45%	59.46%	66.07%
Covered payroll	$ 79.7	$ 84.1	$ 88.5
Net OPEB liability as a percentage of covered payroll	97.37%	87.16%	66.21%
Discount rate	7.28%	7.28%	7.28%

** Fiscal year 2018 was the first year of GASB 75 implementation, therefore only 3 years are shown.*

VALLEY WATER

Schedule of Employer Other Post Employment Benefit Contributions
June 30, 2020
Last 10 Years*
(Dollars in Millions)

	2018	2019	2020
Actuarially determined contribution	$ 9.5	$ 10.2	$ 10.8
Contributions in relation to the actuarially determined contribution	(12.5)	(10.2)	(10.8)
Contribution Deficiency / (Excess)	$ (3.0)	$ -	$ -
Covered payroll[1]	$ 84.1	$ 88.5	$ 91.0
Contribution as a percentage of covered payroll	14.86%	11.53%	11.87%

[1] The covered payroll noted on this page is different from the covered payroll presented on the previous page as the previous page is payroll related to the net OPEB liability in the applicable measurement period.

The covered payroll for the current year is from the actuarial valuation study using a prior year measurement date, adjusted to the current year using a 3% increase.

** Fiscal year 2018 was the first year of GASB 75 implementation, therefore only 3 years are shown.*

VALLEY WATER

Schedule of Revenues, Expenditures and
Changes in Fund Balances - Budget and Actual
Budgeted Governmental Funds
For the Year Ended June 30, 2020
(Dollars in Millions)

	General Fund			
	Original Budget	Final Budget	Budgetary Basis Actual	Variance with Final Budget Positive (Negative)
Revenues:				
Property taxes	$ 8.4	$ 8.4	$ 9.2	$ 0.8
Use of money and property:				
Investment income	0.2	0.2	0.5	0.3
Rental	-	-	-	-
Reimbursement of capital costs	-	-	-	-
Other	-	-	0.1	0.1
Total revenues	8.6	8.6	9.8	1.2
Expenditures:				
Operating budget:				
Operations and operating projects	58.6	58.8	58.6	0.2
Debt service:				
Principal repayment	0.5	0.5	0.5	-
Interest and fiscal charges			-	-
Total operating budget	59.1	59.3	59.1	0.2
Capital budget:				
Capital improvement projects	2.2	2.2	1.5	0.7
Total expenditures	61.3	61.5	60.6	0.9
Excess (deficiency) of revenues over (under) expenditures	(52.7)	(52.9)	(50.8)	2.1
Other financing sources (uses):				
Intra-district overhead reimbursement	54.1	54.1	52.2	(1.9)
Transfers in	0.9	0.9	0.4	(0.5)
Transfers out	(0.7)	(0.7)	(0.7)	-
Total other financing sources	54.3	54.3	51.9	(2.4)
Excess (deficiency) of revenues and other financing sources over (under) expenditures and other financial uses	$ 1.6	$ 1.4	1.1	$ (0.3)

Reconciliation of GAAP and budgetary basis:	
Expenditures of prior year encumbrances recognized on the GAAP basis:	
Operations and operating projects	(1.8)
Capital improvement projects	(2.0)
Current year encumbrances recognized on the budgetary basis:	
Operations and operating projects	2.4
Capital improvement projects	0.4
Fund Balances, beginning of year	14.1
Fund Balances, end of year	$ 14.2

See accompanying notes to required supplementary information

Watershed & Stream Stewardship				Safe, Clean Water & Natural Flood Protection			
Original Budget	Final Budget	Budgetary Basis Actual	Variance with Final Budget Positive (Negative)	Original Budget	Final Budget	Budgetary Basis Actual	Variance with Final Budget Positive (Negative)
$ 86.1	$ 86.1	$ 93.1	$ 7.0	$ 45.5	$ 45.5	$ 46.1	$ 0.6
2.0	2.0	5.2	3.2	2.4	2.4	5.8	3.4
1.4	1.4	1.7	0.3	-	-	0.4	0.4
7.3	7.3	15.2	7.9	13.5	13.5	14.3	0.8
0.2	0.2	1.6	1.4	-	-	-	-
97.0	97.0	116.8	19.8	61.4	61.4	66.6	5.2
58.4	57.1	51.7	5.4	17.3	22.4	20.5	1.9
-	-	-	-	0.8	0.8	-	0.8
-	-	-	-	2.3	2.3	0.7	1.6
58.4	57.1	51.7	5.4	20.4	25.5	21.2	4.3
28.4	65.7	19.0	46.7	34.0	133.1	70.9	62.2
86.8	122.8	70.7	52.1	54.4	158.6	92.1	66.5
10.2	(25.8)	46.1	71.9	7.0	(97.2)	(25.5)	71.7
-	-	-	-	-	-	-	-
2.3	2.4	4.1	1.7	18.6	21.2	20.9	(0.3)
(21.5)	(24.1)	(22.8)	1.3	-	-	-	-
(19.2)	(21.7)	(18.7)	3.0	18.6	21.2	20.9	(0.3)
$ (9.0)	$ (47.5)	27.4	$ 74.9	$ 25.6	$ (76.0)	(4.6)	$ 71.4
		(1.6)				(3.2)	
		(9.2)				(13.7)	
		2.0				0.8	
		0.1				10.7	
		153.3				168.5	
		$ 172.0				$ 158.5	

Valley Water annually adopts a budget in June to be effective July 1 for the ensuing fiscal year. Annual appropriated budgets are adopted for the general fund, special revenue funds, and for all proprietary funds. The COP construction and COP debt service funds are not budgeted.

Legal budgetary (expenditure) control is established at the fund level, further controlled within the fund at the category level. The categories are defined as the operating budget (operations and maintenance, debt service, and operating projects) and the capital budget (capital improvement projects) in the budget and actual budgetary basis schedules. The amounts stated therein as proposed expenditures become appropriations to the various organization units. The Board may amend the budget by motion during the fiscal year. The Chief Executive Officer is authorized to transfer appropriations within budget categories by fund. All unencumbered appropriations for operations and maintenance, operating projects and debt service lapse at fiscal year-end. The encumbered appropriation balance is carried forward to the succeeding year and is not re-appropriated. Unexpended appropriations for capital projects are carried forward until project completion or termination.

The budget process is based upon accounting for certain transactions on a basis other than the Generally Accepted Accounting Principles (GAAP) basis. The results of operations are presented in the budget and actual schedules in accordance with the budgetary basis to provide a meaningful comparison with the budget. The major differences between the budgetary basis and GAAP basis are as follows:

- Certain accruals (primarily accrued vacation and sick leave pay) are excluded from the budgetary basis because such amounts are budgeted on a cash basis.
- Year-end encumbrances are recognized as expenditures on the budgetary basis, while encumbered amounts are not recognized as expenditures on the GAAP basis until incurred.
- Certain budgeted debt service expenditures in special revenue funds are recorded as operating transfers out on a GAAP basis.
- Intra-district overhead reimbursement on a budgetary basis is reflected as a reimbursement of expenditures on a GAAP basis.

Reported budget amounts reflect the annual budget as originally adopted and as subsequently amended by the Board of Directors. The budget amounts are based on estimates of Valley Water's expenditures/expenses and the proposed means of financing them. The final budget of capital improvement projects includes budget adjustments related to capital projects' period year balance forward. Actual expenditures for capital items, as in the case of special revenue funds, may vary significantly from budget due to the timing of such expenditures.

This page intentionally left blank

Supplemental Information

Schedule of Revenues, Expenditures and Change in Fund Balances – Selected Watershed Activities Contained Within the Watershed and Stream Stewardship Funds

Schedule of Revenues, Expenditures and Change in Fund Balances – Budget and Actual Selected Watershed Activities Contained Within the Watershed and Stream Stewardship Fund

VALLEY WATER

Schedule of Revenues, Expenditures and
Changes in Fund Balances
Selected Watershed Activities
Within the Watershed and Stream Stewardship Fund
For the Year Ended June 30, 2020
(Dollars in Millions)

	Lower Peninsula Watershed	West Valley Watershed
Revenues:		
Benefit assessments	$ 2.7	$ 2.3
Total revenues	2.7	2.3
Expenditures:		
Debt service:		
Principal repayments	-	-
Interest and fiscal charges	-	-
Total expenditures	-	-
Excess (deficiency) of revenues over (under) expenditures	2.7	2.3
Other financing source (uses):		
Transfers out	(2.7)	(2.3)
Total other financing sources (uses)	(2.7)	(2.3)
Net change in fund balances	-	-
Fund balances, beginning of year	-	-
Fund balances, end of year	$ -	$ -

Guadalupe Watershed	Coyote Watershed	Total
$ 4.5	$ 3.9	$ 13.4
4.5	3.9	13.4
-	-	-
-	-	-
-	-	-
4.5	3.9	13.4
(4.5)	(3.9)	(13.4)
(4.5)	(3.9)	(13.4)
-	-	-
-	-	-
$ -	$ -	$ -

VALLEY WATER

Schedule of Revenues, Expenditures and
Changes in Fund Balances - Budget and Actual
Selected Watershed Activities
Within the Watershed and Stream Stewardship Fund
For the Year Ended June 30, 2020
(Dollars in Millions)

	Lower Peninsula Watershed				
	Original Budget	Final Budget	Budgetary Basis Actual	Variance with Final Budget Positive (Negative)	Original Budget
Revenues:					
Benefit assessments	$ 2.7	$ 2.7	$ 2.7	$ -	$ 2.3
Total revenues	2.7	2.7	2.7	-	2.3
Expenditures:					
Debt service:					
Principal repayment	1.3	1.3	1.8	(0.5)	1.4
Interest and fiscal charges	1.0	1.0	0.5	0.5	0.5
Total expenditures	2.3	2.3	2.3	-	1.9
Excess (deficiency) of revenues over (under) expenditures	0.4	0.4	0.4	-	0.4
Other financing sources (uses):					
Transfers out	(0.4)	(0.4)	(0.4)	-	(0.4)
Total other financing sources (uses)	(0.4)	(0.4)	(0.4)	-	(0.4)
Excess (deficiency) of revenues and other financing sources over (under) expenditures and other financial uses	$ -	$ -	$ -	$ -	$ -

West Valley Watershed			Guadalupe Watershed			
Final Budget	Budgetary Basis Actual	Variance with Final Budget Positive (Negative)	Original Budget	Final Budget	Budgetary Basis Actual	Variance with Final Budget Positive (Negative)
$ 2.3	$ 2.3	$ -	$ 4.5	$ 4.5	$ 4.5	$ -
2.3	2.3	-	4.5	4.5	4.5	-
1.4	1.6	(0.2)	2.8	2.8	3.3	(0.5)
0.5	0.3	0.2	0.9	0.9	0.4	0.5
1.9	1.9	-	3.7	3.7	3.7	-
0.4	0.4	-	0.8	0.8	0.8	-
(0.4)	(0.4)	-	(0.8)	(0.8)	(0.8)	-
(0.4)	(0.4)	-	(0.8)	(0.8)	(0.8)	-
$ -	$ -	$ -	$ -	$ -	$ -	$ -

SANTA CLARA VALLEY WATER DISTRICT

Schedule of Revenues, Expenditures and
Changes in Fund Balances - Budget and Actual (Continued)
Selected Watershed Activities Contained
Within the Watershed and Stream Stewardship Fund
For the Year Ended June 30, 2020
(Dollars in Millions)

	Coyote Watershed			
	Original Budget	Final Budget	Budgetary Basis Actual	Variance with Final Budget Positive (Negative)
Revenues:				
Benefit Assessments	$ 3.9	$ 3.9	$ 3.9	$ -
Total revenues	3.9	3.9	3.9	-
Expenditures:				
Debt service:				
Principal repayment	2.1	2.1	2.6	(0.5)
Interest and fiscal charges	1.1	1.1	0.5	0.6
Total expenditures	3.2	3.2	3.1	0.1
Excess (deficiency) of revenues over (under) expenditures	0.7	0.7	0.8	0.1
Other financing sources (uses):				
Transfers out	(0.7)	(0.7)	(0.8)	(0.1)
Total other financing sources (uses)	(0.7)	(0.7)	(0.8)	(0.1)
Excess (deficiency) of revenues and other financing sources over (under) expenditures	$ -	$ -	$ -	$ -

Water Enterprise and State Water Project Funds

Schedules of Revenues, Expenses and Change in Fund Net Position
Budget and Actual

VALLEY WATER

Schedule of Revenues, Expenses and
Changes in Net Position - Budget and Actual
Water Enterprise and State Water Project Funds
For the Year Ended June 30, 2020
(Dollars in Millions)

	Water Enterprise Fund			
	Original Budget	Final Budget	Budgetary Basis Actual	Variance with Final Budget Positive (Negative)
Revenues:				
Property taxes	$ 7.5	$ 7.5	$ 8.4	$ 0.9
Intergovernmental services	1.2	1.2	3.7	2.5
Ground water production charges	105.0	105.0	112.6	7.6
Treated water charges	169.5	169.5	152.6	(16.9)
Surface and recycled water revenue	2.8	2.8	1.7	(1.1)
Investment income	2.8	2.8	8.8	6.0
Capital reimbursements	11.9	11.9	4.3	(7.6)
Other	1.0	1.0	1.3	0.3
Total revenues	301.7	301.7	293.4	(8.3)
Expenses:				
Current:				
Operations and operating projects	159.8	161.8	143.8	18.0
Debt Service:				
Principal repayment	14.0	14.0	13.1	0.9
Interest and fiscal charges	29.8	29.8	21.1	8.7
Capital outlay:				
Capital improvement projects	133.5	155.6	132.2	23.4
Total expenses	337.1	361.2	310.2	51.0
Excess (deficiency) of revenues over (under) expenses before transfers	(35.4)	(59.5)	(16.8)	42.7
Transfers in	1.1	1.1	1.1	-
Transfers out	(2.5)	(2.6)	(2.6)	-
Excess (deficiency) of revenues and other financing sources over (under) expenses	$ (36.8)	$ (61.0)	(18.3)	$ 42.7

Reconciliation of GAAP and budgetary basis:	
Depreciation and amortization expense not budgeted	(30.3)
Capitalized expenditures	123.6
Inventory adjustment not budgeted	1.3
Debt principal and GAAP basis accruals for interest payable	14.8
GAAP basis expenses and other liabilities	9.1
Expenses of prior year encumbrances recognized on the GAAP basis:	
Operations and operating projects	(8.6)
Capital improvement projects	(63.9)
Current year encumbrances recognized on the budgetary basis:	
Operations and operating projects	8.0
Capital improvement projects	56.2
Net position, beginning of year	877.1
Net position, end of year	$ 969.0

State Water Project Fund				Total			
Original Budget	Final Budget	Budgetary Basis Actual	Variance with Final Budget Positive (Negative)	Original Budget	Final Budget	Budgetary Basis Actual	Variance with Final Budget Positive (Negative)
$ 18.0	$ 18.0	$ 21.8	$ 3.8	$ 25.5	$ 25.5	$ 30.2	$ 4.7
-	-	-	-	1.2	1.2	3.7	2.5
-	-	-	-	105.0	105.0	112.6	7.6
-	-	-	-	169.5	169.5	152.6	(16.9)
-	-	-	-	2.8	2.8	1.7	(1.1)
-	-	-	-	2.8	2.8	8.8	6.0
-	-	-	-	11.9	11.9	4.3	(7.6)
1.0	1.0	1.4	0.4	2.0	2.0	2.7	0.7
19.0	19.0	23.2	4.2	320.7	320.7	316.6	(4.1)
25.1	25.1	24.8	0.3	184.9	186.9	168.6	18.3
-	-	-	-	14.0	14.0	13.1	0.9
-	-	-	-	29.8	29.8	21.1	8.7
-	-	-	-	133.5	155.6	132.2	23.4
25.1	25.1	24.8	0.3	362.2	386.3	335.0	51.3
(6.1)	(6.1)	(1.6)	4.5	(41.5)	(65.6)	(18.4)	47.2
-	-	-	-	1.1	1.1	1.1	-
-	-	-	-	(2.5)	(2.6)	(2.6)	-
$ (6.1)	$ (6.1)	(1.6)	$ 4.5	$ (42.9)	$ (67.1)	(19.9)	$ 47.2
		(0.9)				(31.2)	
		-				123.6	
		-				1.3	
		-				14.8	
		-				9.1	
		-				(8.6)	
		-				(63.9)	
		3.0				11.0	
		-				56.2	
		31.4				908.5	
		$ 31.9				$ 1,000.9	

Internal Service Funds

The Internal Service Funds are similar to Enterprise Funds, except that services are rendered to other District units rather than to District customers. This fund type consists of the Equipment Fund, Risk Management Fund, and Information Technology Fund.

Equipment Fund - the fund is used to account for the maintenance and operation of the District's fleet vehicles and heavy construction equipment. Financing is provided through rental charges to operations based upon usage.

Risk Management Fund – the fund is used to account for the monies set aside to pay for all claims, judgment and premium costs. Financing is provided through premiums charged to District operations.

Information Technology Fund – the fund is used to account for the maintenance and replacement of district-wide capital related information technology projects. Financing is provided through rental charges to operations based upon usage.

VALLEY WATER

Combining Statement of Net Position
Internal Service Funds
June 30, 2020
(Dollars in Millions)

	Equipment	Risk Management	Information Technology	Total
ASSETS				
Current assets:				
Cash and investments	$ 4.6	$ 14.7	$ 22.3	$ 41.6
Inventory	0.1	-	-	0.1
Total current assets	4.7	14.7	22.3	41.7
Noncurrent assets:				
Capital assets				
Depreciable assets	22.2	-	11.2	33.4
Accumulated depreciation	(13.3)	-	(6.8)	(20.1)
Total noncurrent assets	8.9	-	4.4	13.3
Total assets	13.6	14.7	26.7	55.0
Deferred outflows of resources - pension activities	0.6	0.6	0.4	1.6
Deferred outflows of resources - OPEB	0.1	0.1	0.2	0.4
Deferred outflows of resources	0.7	0.7	0.6	2.0
LIABILITIES				
Current liabilities:				
Accounts payable	0.2	0.2	1.5	1.9
Claims payable	-	2.1	-	2.1
Compensated absence	0.1	-	-	0.1
Total current liabilities	0.3	2.3	1.5	4.1
Non current liabilities:				
Claims payable	-	5.4	-	5.4
Net Pension liability	2.5	2.8	5.1	10.4
Other post employment benefits liability	0.8	0.7	-	1.5
Compensated absence	0.2	0.2	-	0.4
Total non current liabilities	3.5	9.1	5.1	17.7
Total liabilities	3.8	11.4	6.6	21.8
Deferred inflows of resources - pension activities	0.2	0.1	-	0.3
Deferred inflows of resources - OPEB	0.1	0.1	0.2	0.4
Deferred inflows of resources	0.3	0.2	0.2	0.7
NET POSITION				
Net investment in capital assets	8.9	-	4.4	13.3
Unrestricted	1.3	3.8	16.1	21.2
Total net position	$ 10.2	$ 3.8	$ 20.5	$ 34.5

VALLEY WATER

Combining Statement of Revenues, Expenses and
Changes in Fund Net Position
Internal Service Funds
For the Year Ended June 30, 2020
(Dollars in Millions)

	Equipment	Risk Management	Information Technology	Total
Operating revenues:				
Vehicle service charges	$ 5.7	$ -	$ -	$ 5.7
Computer equipment use charges	-	-	15.1	15.1
Self-insurance service charges	-	4.9	-	4.9
Total operating revenues	5.7	4.9	15.1	25.7
Operating expenses:				
Administration and general	-	6.5	-	6.5
Equipment maintenance	3.7	-	22.0	25.7
Depreciation and amortization	1.6	-	1.2	2.8
Total operating expenses	5.3	6.5	23.2	35.0
Operating Income (loss)	0.4	(1.6)	(8.1)	(9.3)
Nonoperating revenues:				
Investment income	0.1	0.5	0.7	1.3
Gain on sale of capital assets	0.1	-	-	0.1
Other	-	0.2	-	0.2
Total nonoperating revenues	0.2	0.7	0.7	1.6
Income (loss) before transfers	0.6	(0.9)	(7.4)	(7.7)
Transfer in	-	-	4.1	4.1
Change in net position	0.6	(0.9)	(3.3)	(3.6)
Net position, beginning of year	9.6	4.7	23.8	38.1
Net position, end of year	$ 10.2	$ 3.8	$ 20.5	$ 34.5

VALLEY WATER

Combining Statement of Cash Flows
Internal Service Funds
For the Year Ended June 30, 2020
(Dollars in Millions)

	Equipment	Risk Management	Information Technology	Total
Cash flows from operating activities:				
Receipts from interfund services provided	$ 5.7	$ 4.9	$ 15.1	$ 25.7
Payments to suppliers	(2.5)	(3.9)	(12.5)	(18.9)
Payments to employees	(1.4)	(2.0)	(6.7)	(10.1)
Net cash provided (used) by operating activities	1.8	(1.0)	(4.1)	(3.3)
Cash flows from noncapital financing activities:				
Other receipts (payments)	-	0.2	-	0.2
Net cash provided by noncapital financing activities	-	0.2	-	0.2
Cash flows from capital and related financing activities:				
Acquisition and disposal of capital assets	(1.4)	-	(0.6)	(2.0)
Transfers in - capital project reimbursement	-	-	4.1	4.1
Net cash (used) by capital and related financing activities	(1.4)	-	3.5	2.1
Cash flows from investing activities:				
Interest received on cash and investments	0.1	0.5	0.7	1.3
Net increase/(decrease) in cash and cash equivalents	0.5	(0.3)	0.1	0.3
Cash and cash equivalents, beginning of year	4.1	15.0	22.2	41.3
Cash and cash equivalents, end of year	$ 4.6	$ 14.7	$ 22.3	$ 41.6
Reconciliation of operating income to net cash provided by operating activities:				
Operating income (loss)	$ 0.4	$ (1.6)	$ (8.1)	$ (9.3)
Adjustments to reconcile operating income (loss) to net cash provided by operating activities:				
Depreciation, amortization and asset deletion	1.6	-	1.2	2.8
Change in operating assets and liabilities:				
Increase/(decrease) in accounts payable	(0.1)	0.1	1.1	1.1
Increase/(decrease) in claims payable	-	0.4	-	0.4
Increase/(decrease) in GASB68 Retirement payable	-	0.2	2.1	2.3
Increase/(decrease) in OPEB/GASB75 payable	(0.2)	(0.2)	(0.3)	(0.7)
Increase/(decrease) in def inflows/outflows of resources	0.1	0.1	(0.1)	0.1
Net cash used for operating activities	$ 1.8	$ (1.0)	$ (4.1)	$ (3.3)

VALLEY WATER

Schedule of Revenues, Expenses and
Changes in Fund Net Position - Budget and Actual
Internal Service Funds
For the Year Ended June 30, 2020
(Dollars in Millions)

	Equipment			
	Original Budget	Final Budget	Budgetary Basis Actual	Variance with Final Budget Positive (Negative)
Revenues:				
Investment income	$ -	$ -	$ 0.1	$ 0.1
Vehicle service charges	5.7	5.7	5.7	-
Computer equipment use charges	-	-	-	-
Self-insurance service charges	-	-	-	-
Gain on sale of fixed assets	0.2	0.2	0.1	(0.1)
Other	-	-	-	-
Total revenues	5.9	5.9	5.9	-
Expenditures:				
Current:				
Operations and operating projects	4.8	4.8	3.8	1.0
Capital equipment acquisition	2.2	1.9	1.9	-
Total expenditures	7.0	6.7	5.7	1.0
Excess (deficiency) of revenues over (under) expenditures before transfers	(1.1)	(0.8)	0.2	1.0
Transfer in	-	-	-	-
Excess (deficiency) of revenues and other financing resources over (under) expenditures and other financial uses	$ (1.1)	$ (0.8)	0.2	$ 1.0

Reconciliation of GAAP and budgetary basis:	
Depreciation and amortization expense not budgeted	(1.6)
Capitalized expenditures	1.7
Expenditures of prior year encumbrances recognized on the GAAP basis:	
Operations and operating projects	-
Capital improvement projects	(1.4)
Current year encumbrances recognized on the budgetary basis:	
Operations and operating projects	(0.1)
Capital improvement projects	1.8
Net position, beginning of year	9.6
Net position, end of year	$ 10.2

Risk Management				Information Technology			
Original Budget	Final Budget	Budgetary Basis Actual	Variance with Final Budget Positive (Negative)	Original Budget	Final Budget	Budgetary Basis Actual	Variance with Final Budget Positive (Negative)
$ 0.3	$ 0.3	$ 0.5	$ 0.2	$ 0.2	$ 0.2	$ 0.7	$ 0.5
-	-	-	-	-	-	-	-
-	-	-	-	15.4	15.4	15.1	(0.3)
5.6	5.6	4.9	(0.7)	-	-	-	-
-	-	-	-	-	-	-	-
-	-	0.2	0.2	-	-	-	-
5.9	5.9	5.6	(0.3)	15.6	15.6	15.8	0.2
5.8	6.7	6.1	0.6	17.0	15.5	15.7	(0.2)
-	-	-	-	4.1	13.9	9.4	4.5
5.8	6.7	6.1	0.6	21.1	29.4	25.1	4.3
0.1	(0.8)	(0.5)	0.3	(5.5)	(13.8)	(9.3)	4.5
-	-	-	-	4.1	4.1	4.1	-
$ 0.1	$ (0.8)	(0.5)	$ 0.3	$ (1.4)	$ (9.7)	(5.2)	$ 4.5
		-				(1.2)	
		-				0.5	
		(0.5)				(1.0)	
		-				(1.4)	
		0.2				1.0	
		-				4.0	
		4.7				23.8	
		$ 3.9				$ 20.5	

VALLEY WATER

Schedule of Revenues, Expenses and
Changes in Fund Net Position - Budget and Actual (Continued)
Internal Service Funds
For the Year Ended June 30, 2020
(Dollars in Millions)

	Total			
	Original Budget	Final Budget	Budgetary Basis Actual	Variance with Final Budget Positive (Negative)
Revenues:				
Investment income	$ 0.5	$ 0.5	$ 1.3	$ 0.8
Vehicle service charges	5.7	5.7	5.7	-
Computer equipment use charges	15.4	15.4	15.1	(0.3)
Self-insurance service charges	5.6	5.6	4.9	(0.7)
Gain on sale of fixed assets	0.2	0.2	0.1	(0.1)
Other	-	-	0.2	0.2
Total revenues	27.4	27.4	27.3	(0.1)
Expenditures:				
Current:				
Operations and operating projects	27.6	27.0	25.6	1.4
Capital equipment acquisition	6.3	15.8	11.3	4.5
Total expenditures	33.9	42.8	36.9	5.9
Excess (deficiency) of revenues over (under) expenditures before transfers	(6.5)	(15.4)	(9.6)	5.8
Transfer in	4.1	4.1	4.1	-
Excess (deficiency) of revenues and other financing resources over (under) expenditures and other financial uses	$ (2.4)	$ (11.3)	(5.5)	$ 5.8
Reconciliation of GAAP and budgetary basis:				
Depreciation and amortization expense not budgeted			(2.8)	
Capitalized expenditures			2.2	
Expenditures of prior year encumbrances recognized on the GAAP basis:				
Operations and operating projects			(1.5)	
Capital improvement projects			(2.8)	
Current year encumbrances recognized on the budgetary basis:				
Operations and operating projects			1.1	
Capital improvement projects			5.8	
Net position, beginning of year			38.1	
Net position, end of year			$ 34.6	

Agency Fund

Agency fund type is used to account for assets held by the District in a fiduciary capacity as an agent for individuals, private organizations, other governments and/or other funds.

Deposit Fund - The fund is used to account for the collection and payment of expenditures for funds held in trust for specific restricted purposes.

VALLEY WATER

Statement of Changes in Assets and Liabilities

Agency Fund

For the Year Ended June 30, 2020

(Dollars in Millions)

	Balance July 2, 2019	Additions	Deletions	Balance June 30, 2020
Deposit Fund				
Assets:				
Cash and investments (Note 3)	$ 0.2	$ 0.6	$ (0.6)	$ 0.2
Total assets	$ 0.2	$ 0.6	$ (0.6)	$ 0.2
Liabilities:				
Deposits payable	$ 0.2	$ 0.5	$ (0.5)	$ 0.2
Total liabilities	$ 0.2	$ 0.5	$ (0.5)	$ 0.2

Capital Assets Used in the Operation of Governmental Activities

Capital assets consist of land, improvements to land, buildings, equipment and intangibles that are used in operations and that have initial useful lives extending beyond a single reporting period.

VALLEY WATER

Capital Assets Used in the Operation of Governmental Activities
Schedule By Source
June 30, 2020
(Dollars in Millions)

Governmental activities capital assets:		
Land	$	191.7
Buildings		42.0
Structures and improvements		772.6
Equipment		53.0
Construction in process		668.1
Intangibles:		
Easements		27.4
Computer Software		4.3
Total governmental funds capital assets	$	1,759.1

Investments in governmental activities capital assets by source:		
General fund	$	88.4
Special revenue funds:		
Watershed & Stream Stewardship		1,131.8
Safe, Clean Water & Natural Flood Protection		505.6
Internal service funds		33.3
Total governmental funds capital assets	$	1,759.1

VALLEY WATER
Capital Assets Used in the Operation of Governmental Activities
Schedule By Function and Activity
June 30, 2020
(Dollars in Millions)

Dept	Function and Activity	Land	Buildings	Structures and Improvements	Equipment	Construction in Progress	Intangibles Easements	Intangibles Software	Total
100	**CEO Support Operations**								
102	Chief Executive Office	$ -	$ -	$ -	$ 0.4	$ -	$ -	$ -	$ 0.4
200	**Watershed Operations**								
210	Chief Operating Office	-	-	-	5.2	-	-	-	5.2
210	**Watershed Management Division**								
215	Watershed Business Management	-	-	-	0.1	-	-	-	0.1
250	Lower Peninsula/West Valley Mgnt.	-	-	-	0.2	-	-	-	0.2
270	Guadalupe Watershed Mgmt.	-	-	-	0.4	-	-	-	0.4
310	**Capital Program Services Division**								
340	Capital Program Services Departments	-	-	-	0.4	-	-	-	0.4
410	**Water Utility Enterprise Operations**								
410	Chief Operating Office	-	-	-	0.1	-	-	-	0.1
420	Water Utility Enterprise	-	-	-	0.2	-	-	-	0.2
600	**Administration**								
602	Chief Administrative Office	-	-	-	0.2	-	-	-	0.2
670	**Financial Services Division**								
610	Office of Administrative Services	-	-	-	0.1	-	-	-	0.1
670	Business And Finance Program	-	-	-	1.7	-	-	-	1.7
710	**Information Management Division**								
715	Information Management Division	-	-	-	0.2	-	-	-	0.2
720	Information Mgmt. Support Departments	-	-	-	9.1	-	-	-	9.1
810	**General Services Division**								
815	Technical Services Division	-	-	-	-	-	-	-	-
820	Technical Services Support Division	-	-	-	1.2	-	-	-	1.2
765	Records and Library	-	-	-	0.2	-	-	-	0.2
820	Warehouse Services	-	-	-	3.9	-	-	-	3.9
885	Equipment Management	-	-	-	16.9	-	-	-	16.9
910	**Human Resources Program**								
660	Human Resources Program	-	-	-	0.1	-	-	-	0.1
	Other:								
	District-wide property	191.7	42.0	772.6	12.4	668.1	27.4	4.3	1,718.5
	Total capital assets	$ 191.7	$ 42.0	$ 772.6	$ 53.0	$ 668.1	$ 27.4	$ 4.3	$ 1,759.1

VALLEY WATER

Capital Assets Used in the Operation of Governmental Activities
Schedule of Changes By Function and Activity
For the Year Ended June 30, 2020
(Dollars in Millions)

Dept	Function and Activity	Governmental Capital Assets July 1, 2019	Additions	Deductions	Governmental Capital Assets June 30, 2020
100	**CEO Support Operations**				
102	Chief Executive Office	$ 0.4	$ -	$ -	$ 0.4
200	**Watershed Operations**				
202	Chief Operating Office	5.2	-	-	5.2
210	**Watershed Management Division**				
215	Watershed Business Management	0.1	-	-	0.1
230	Watershed Planning	-	-	-	-
250	Lower Peninsula/West Valley Mgnt.	0.2	-	-	0.2
270	Guadalupe Watershed Mgmt.	0.4	-	-	0.4
310	**Capital Program Services Division**				
340	Capital Program Services Departments	0.6	-	-	0.6
410	**Water Utility Enterprise Operations**				
410	Chief Operating Office	0.1	-	-	0.1
420	Water Utility Enterprise	0.2	-	-	0.2
600	**Administration**				
602	Chief Administrative Office	0.2	-	-	0.2
670	**Financial Services Division**				
610	Office of Administrative Services	0.1	-	-	0.1
670	Business And Finance Program	1.7	-	-	1.7
710	**Information Management Division**				
715	Information Management Division	0.2	-	-	0.2
720	Information Mgmt. Support Departments	9.5	0.2	-	9.7
810	**General Services Division**				
820	Technical Services Support Division	1.2	-	(0.1)	1.1
765	Records and Library	0.2	-	-	0.2
820	Warehouse Services	3.7	-	-	3.7
885	Equipment Management	17.4	1.7	(2.7)	16.4
910	**Human Resources Program**				
660	Human Resources Program	0.1	-	-	0.1
	Other:				
	District-wide property	1,654.9	92.9	(29.3)	1,718.5
		$ 1,696.4	$ 94.8	$ (32.1)	$ 1,759.1

SANTA CLARA VALLEY WATER DISTRICT

Statistical Section

This part of the District's comprehensive annual financial statement report presents detailed information as a context for understanding what the information in the financial statement, note disclosures, and required supplementary information says about the District's overall financial health.

Contents **Page**

Financial Trends 144

These schedules contain trend information to help the reader understand how the District's financial performance and well-being have changed over time.

Revenue Capacity 152

These schedules contain information to help the reader assess the District's most significant local revenue source, water sales.

Debt Capacity 159

These schedules present information to help the reader assess the affordability of the District's current level of outstanding debt and the District's ability to issue additional debt in the future.

Demographic and Economic Information 165

These schedules offer demographic and economic indicators to help the reader understand the environment within which the District's financial activities take place.

Operating Information 167

These schedules contain service and infrastructure data to help the reader understand how the information in the District's financial report relates to the services the District provides and the activities it performs.

VALLEY WATER
Net Position by Component
Government-wide
Last Ten Fiscal Years
(Dollars in Millions)

	2011	2012	2013	2014
Governmental activities				
Net Investment in capital assets	$ 915.1	$ 964.4	$ 1,011.1	$ 1,036.9
Restricted	157.2	166.8	182.7	214.7
Unrestricted	141.6	142.3	144.0	144.2
Total governmental activities net position	$ 1,213.9	$ 1,273.5	$ 1,337.8	$ 1,395.8
Business-type activities				
Net Investment in capital assets	$ 524.6	$ 554.3	$ 575.7	$ 573.4
Restricted	26.8	28.1	30.1	30.0
Unrestricted	92.7	86.7	97.7	127.9
Total business-type activities net position	$ 644.1	$ 669.1	$ 703.5	$ 731.3
Primary government				
Net Investment in capital assets	$ 1,439.7	$ 1,518.7	$ 1,586.8	$ 1,610.3
Restricted	184.0	194.9	212.9	244.7
Unrestricted	234.3	229.0	241.6	272.1
Total primary government net position	$ 1,858.0	$ 1,942.6	$ 2,041.3	$ 2,127.1

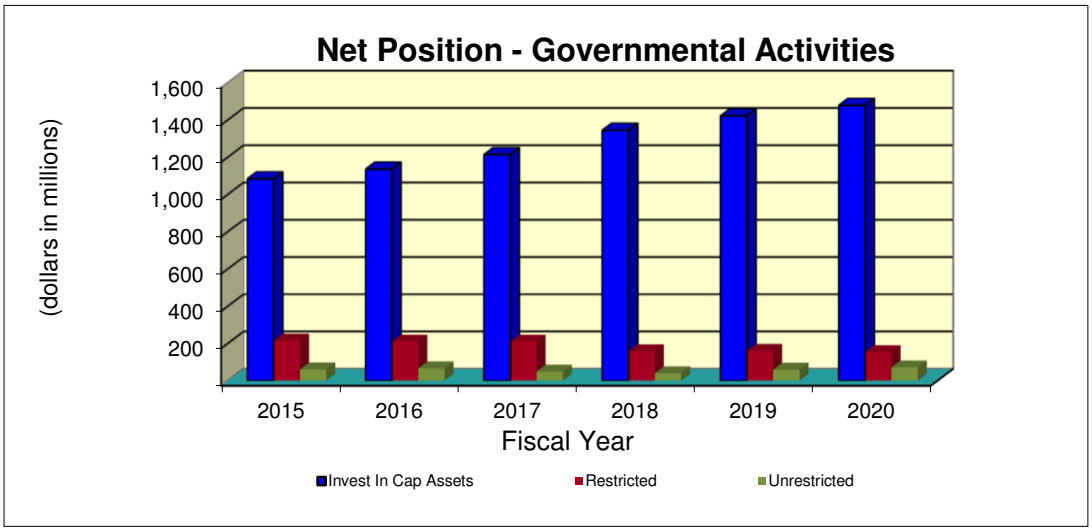

Source: Santa Clara Valley Water District, General Accounting Unit

2015	2016	2017	2018	2019	2020
$ 1,083.6	$ 1,135.6	$ 1,213.8	$ 1,344.1	$ 1,421.6	$ 1,478.4
215.0	210.2	209.9	158.1	160.6	153.7
60.7	66.4	49.0	40.5	59.5	71.8
$ 1,359.3	$ 1,412.2	$ 1,472.7	$ 1,542.7	$ 1,641.7	$ 1,703.9
$ 575.9	$ 598.1	$ 623.8	$ 626.5	$ 625.3	$ 689.2
26.1	24.6	52.1	58.7	71.5	84.7
45.4	32.2	39.9	46.1	81.8	226.1
$ 647.4	$ 654.9	$ 715.8	$ 731.3	$ 778.6	$ 1,000.0
$ 1,659.4	$ 1,733.7	$ 1,837.7	$ 1,970.7	$ 2,046.9	$ 2,167.6
241.1	234.8	262.0	216.7	232.1	238.4
106.2	98.6	88.9	86.6	141.3	297.9
$ 2,006.7	$ 2,067.1	$ 2,188.6	$ 2,274.0	$ 2,420.3	$ 2,703.9

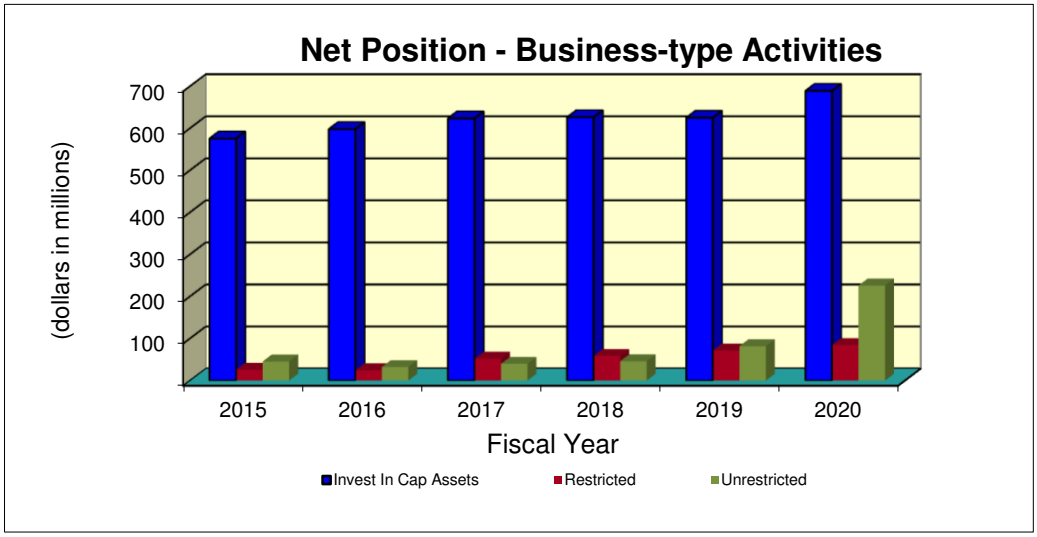

VALLEY WATER
Changes in Net Position
Government-wide
Last Ten Fiscal Years
(Dollars in Millions)

	2011	2012	2013
Expenses			
Governmental activities:			
General government:	$ 10.0	$ 5.4	$ 6.4
Watersheds	54.6	50.3	51.7
Interest on long-term debt	7.5	7.0	8.0
Total governmental activities expenses	72.1	62.7	66.1
Business-type activities:			
Water enterprise	155.4	158.9	161.6
Total primary government expenses	$ 227.5	$ 221.6	$ 227.7
Program Revenues			
Governmental activities:			
Capital grants and contributions	$ 38.6	$ 32.6	$ 34.9
Business-type activities:			
Charges for services	121.3	141.8	155.7
Operating grants and contributions	1.5	1.1	1.0
Capital grants and contributions	10.4	11.8	4.6
Total business-type activities program revenues	133.2	154.7	161.3
Total primary government program revenues	$ 171.8	$ 187.3	$ 196.2
Net (expense)/revenue			
Governmental activities	$ (33.4)	$ (30.1)	$ (31.2)
Business-type activities	(22.1)	(4.2)	(0.3)
Total primary government net expense	$ (55.5)	$ (34.3)	$ (31.5)
General Revenues and Other Changes in Net Position			
Governmental activities:			
Property taxes	$ 86.2	$ 88.2	$ 92.7
Unrestricted investment earnings	3.3	2.3	3.5
Miscellaneous	2.2	2.5	2.9
Transfers	(2.8)	(3.3)	(3.7)
Total governmental activities	88.9	89.7	95.4
Business-type activities:			
Property taxes	23.2	22.3	24.2
Unrestricted investment earnings	1.8	1.1	1.2
Miscellaneous	1.6	2.6	5.6
Transfers	2.8	3.3	3.7
Total business-type activities	$ 29.4	$ 29.3	$ 34.7
Changes in Net Position			
Governmental activities	$ 55.5	$ 59.6	$ 64.2
Business-type activities	7.3	25.1	34.4
Total primary government	$ 62.8	$ 84.7	$ 98.6

Source: Santa Clara Valley Water District, General Accounting Unit

2014	2015	2016	2017	2018	2019	2020
$ 6.9	$ 20.4	$ 5.9	$ 9.3	$ 8.4	$ 3.2	$ 10.9
61.3	56.8	57.7	69.2	85.8	99.4	134.1
6.1	5.8	6.0	4.3	3.1	3.0	2.5
74.3	83.0	69.6	82.8	97.3	105.6	147.5
173.8	186.2	207.3	199.6	229.4	222.1	226.9
$ 248.1	$ 269.2	$ 276.9	$ 282.4	$ 326.7	$ 327.7	$ 374.4
$ 25.8	$ 17.8	$ 19.4	$ 16.6	$ 61.2	$ 40.3	$ 42.9
172.4	154.8	151.2	190.9	231.0	227.7	266.9
1.2	2.1	2.1	2.0	4.4	2.8	3.7
3.5	0.9	3.2	17.5	4.4	1.1	4.3
177.1	157.8	156.5	210.4	239.8	231.6	274.9
$ 202.9	$ 175.6	$ 175.9	$ 227.0	$ 301.0	$ 271.9	$ 317.8
$ (48.6)	$ (65.1)	$ (50.2)	$ (66.2)	$ (36.1)	$ (65.4)	$ (104.6)
3.4	(28.5)	(50.8)	10.8	10.4	9.5	48.0
$ (45.2)	$ (93.6)	$ (101.0)	$ (55.4)	$ (25.7)	$ (55.9)	$ (56.6)
$ 100.6	$ 107.6	$ 114.4	$ 123.3	$ 129.9	$ 143.8	$ 148.4
3.8	3.7	5.0	1.2	2.5	13.6	12.9
2.6	3.0	3.6	4.1	6.7	4.3	3.9
0.3	11.4	(19.9)	(1.9)	8.2	2.7	1.6
107.3	125.7	103.1	126.7	147.3	164.4	166.8
27.0	27.7	30.5	44.8	37.4	30.4	30.2
1.6	1.6	2.9	1.0	1.3	8.1	8.8
3.3	3.1	4.9	2.5	6.4	1.9	2.8
(0.3)	(11.4)	19.9	1.9	(8.2)	(2.7)	(1.6)
$ 31.6	$ 21.0	$ 58.2	$ 50.2	$ 36.9	$ 37.7	$ 40.2
$ 58.7	$ 60.6	$ 52.9	$ 60.5	$ 111.2	$ 99.0	$ 62.2
35.0	(7.5)	7.4	61.0	47.3	47.2	88.2
$ 93.7	$ 53.1	$ 60.3	$ 121.5	$ 158.5	$ 146.2	$ 150.4

VALLEY WATER
Fund Balances of Governmental Funds
Last Ten Fiscal Years
(modified accrual basis of accounting)
(Dollars in Millions)

Data incorporating GASB 54 implementation

	Restated 2011	2012	2013	2014
General Fund				
Committed	$ 7.9	$ 7.2	$ 7.3	$ 10.9
Assigned	3.2	3.9	4.2	5.2
Total general fund	$ 11.1	$ 11.1	$ 11.5	$ 16.1
All other governmental funds				
Restricted	$ 163.4	$ 169.3	$ 194.7	$ 226.5
Committed	86.2	76.5	98.1	93.7
Assigned	43.5	49.5	32.8	31.1
Total all other governmental funds	$ 293.1	$ 295.3	$ 325.6	$ 351.3

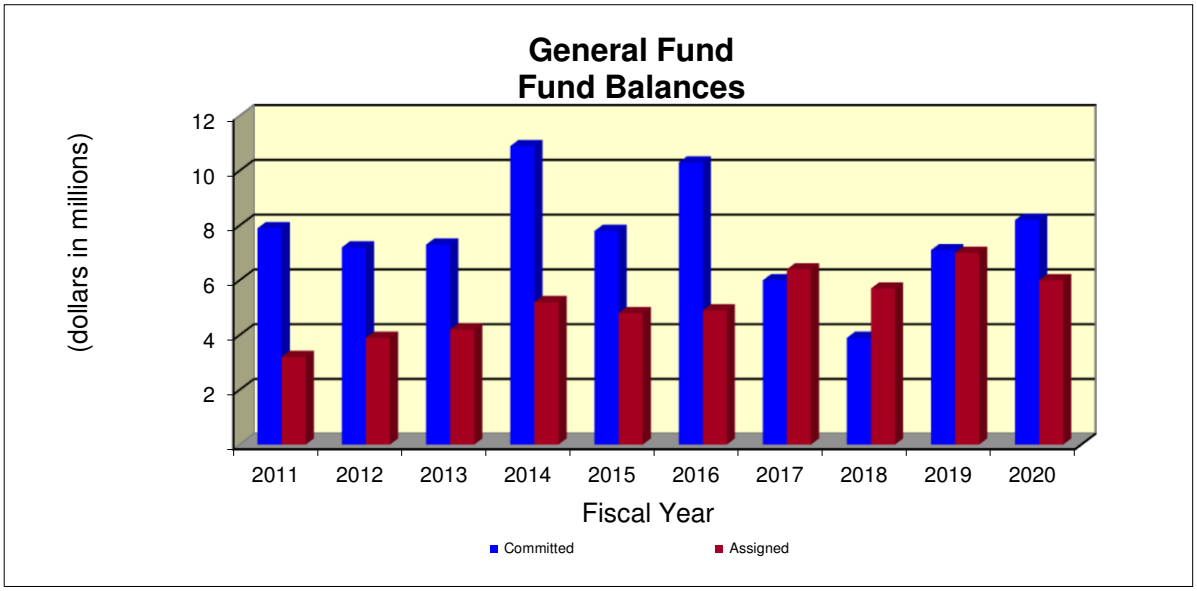

Source: Santa Clara Valley Water District, General Accounting Unit

2015	2016	2017	2018	2019	2020
$ 7.8	$ 10.3	$ 6.0	$ 3.9	$ 7.1	$ 8.2
4.8	4.9	6.4	5.7	7.0	6.0
$ 12.6	$ 15.2	$ 12.4	$ 9.6	$ 14.1	$ 14.2
$ 226.7	$ 214.1	$ 220.1	$ 182.3	$ 176.0	$ 163.9
91.8	64.9	64.9	113.7	132.2	160.5
41.9	68.0	54.2	26.9	21.1	11.5
$ 360.4	$ 347.0	$ 339.2	$ 322.9	$ 329.3	$ 335.9

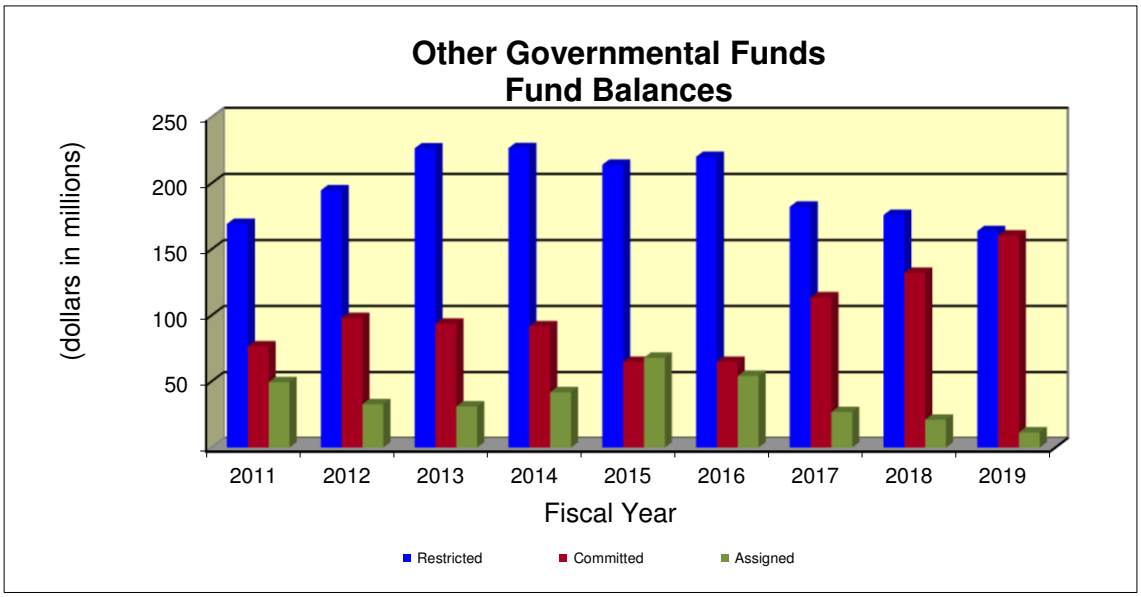

VALLEY WATER
Changes in Fund Balances of Governmental Funds
Last Ten Fiscal Years
(modified accrual basis of accounting)
(Dollars in Millions)

	2011	2012	2013	2014
Revenues				
Property taxes	$ 86.2	$ 88.2	$ 97.2	$ 100.6
Benefit assessments	19.1	19.1	19.2	16.1
Use of money and property:				
Investment income	2.9	1.6	1.8	2.6
Rental	1.4	1.4	1.4	1.6
Reimbursement of capital costs	19.5	13.5	15.8	9.6
Other	0.7	0.9	1.4	0.7
Total Revenues	129.8	124.7	136.8	131.2
Expenditures				
Operations and operating project	53.8	51.4	49.2	50.4
Capital improvement projects	48.4	51.4	44.8	36.9
Debt Service:				
Principal repayment	9.3	9.7	10.9	8.1
Interest and fiscal charges	7.2	6.8	5.9	5.9
Total expenditures	118.7	119.3	110.8	101.3
Excess of revenues over (under) expenditures	11.1	5.4	26.0	29.9
Other financing sources (uses)				
Transfers in	21.0	24.4	21.2	34.4
Transfers out	(23.8)	(27.7)	(24.9)	(34.1)
Proceeds from issuance of debt	-	-	53.0	-
Payment to refunded bond escrow agent	-	-	(53.5)	-
Net original issue premium	-	-	8.9	-
Total other financing sources (uses)	(2.8)	(3.3)	4.7	0.3
Net change in fund balances	$ 8.3	$ 2.1	$ 30.7	$ 30.2
Debt service as a percentage of non-capital expenditures	23.2%	23.0%	25.7%	18.8%

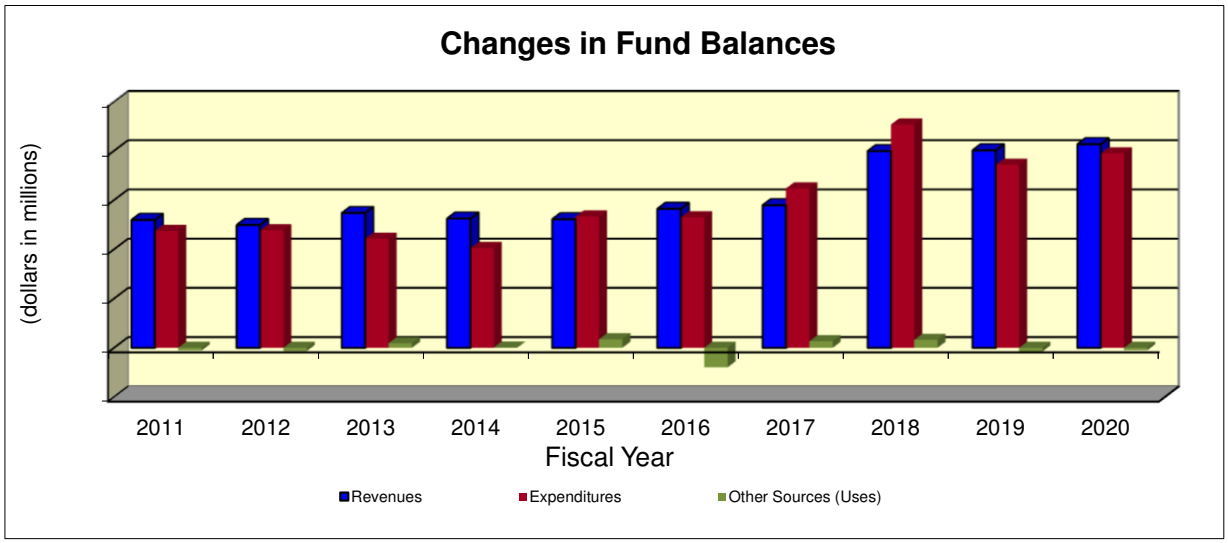

Source: Santa Clara Valley Water District, General Accounting Unit

2015	2016	2017	2018	2019	2020
$ 107.6	$ 114.4	$ 123.3	$ 129.9	$ 143.8	$ 148.4
16.1	14.7	14.8	14.8	14.7	13.4
2.5	3.7	1.0	2.3	12.4	11.6
1.7	1.8	1.8	1.9	2.0	2.1
1.7	4.7	1.8	46.4	25.5	29.5
0.9	1.8	2.0	4.4	2.1	1.7
130.5	141.1	144.7	199.7	200.5	206.7
65.4	57.8	67.5	70.9	68.2	80.2
54.0	61.9	81.6	142.7	104.3	104.9
8.4	7.6	8.0	8.7	8.7	8.1
5.5	5.1	4.7	4.4	4.7	4.2
133.3	132.4	161.8	226.7	185.9	197.4
(2.8)	8.7	(17.1)	(27.0)	14.6	9.3
30.1	26.5	17.4	31.0	17.3	34.4
(21.5)	(46.4)	(19.3)	(22.9)	(21.1)	(36.9)
-	-	68.9	-	-	-
-	-	(60.4)	-	-	-
-	-	-	-	-	-
8.6	(19.9)	6.6	8.1	(3.8)	(2.5)
$ 5.8	$ (11.2)	$ (10.5)	$ (18.9)	$ 10.8	$ 6.8
13.0%	13.4%	15.0%	13.7%	13.8%	9.0%

Dollar amounts rounded to the thousands prior to fiscal year 2020 were rounded to the millions for comparability; totals and ratios for these periods may not add due to independent rounding.

VALLEY WATER
Water Revenue by Category
Last Ten Fiscal Years
(Dollars in Millions)

Fiscal Year	Ground Water Revenue	Treated Water Revenue	Surface & Recycled Water Revenue	Total Water Revenue
2011	$ 50.4	$ 70.1	$ 0.8	$ 121.3
2012	48.0	92.9	0.8	141.8
2013	62.1	92.4	1.3	155.7
2014	84.3	86.4	1.7	172.4
2015	77.1	76.8	0.9	154.8
2016	61.1	89.4	0.7	151.2
2017	67.9	122.2	0.7	190.9
2018	97.5	132.5	1.0	231.0
2019	81.9	144.0	1.8	227.7
2020	112.6	152.6	1.7	266.9

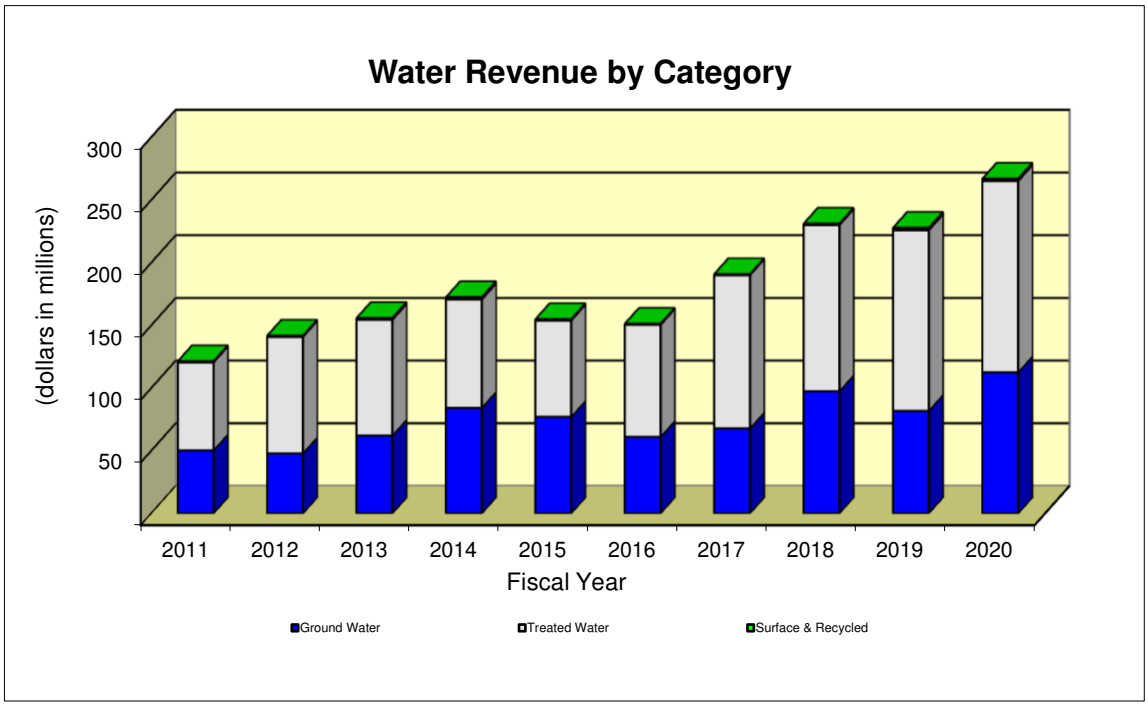

Source: Santa Clara Valley Water District, Wells & Water Production Unit

Valley Water
Principal Water Revenue Customers
Current year and Nine years ago
(Dollars in Millions)

	Fiscal Year 2020			Fiscal Year 2011		
Water Customer	Water Revenue	Rank	Percent of Total Water Revenue	Water Revenue	Rank	Percent of Total Water Revenue
San Jose Water Company	$ 155.4	1	58.22%	$ 68.0	1	56.06%
Santa Clara City Water Department	20.5	2	7.68%	10.0	2	8.24%
California Water Service Company	18.6	3	6.97%	6.8	4	5.61%
San Jose City Water	18.3	4	6.86%	8.6	3	7.09%
Sunnyvale City Water Department	13.3	5	4.98%	6.5	5	5.36%
Great Oaks Water Company	10.6	6	3.97%	4.2	6	3.46%
City of Milpitas	4.2	7	1.57%	2.2	8	1.81%
Gilroy City Water Department	4.0	8	1.50%	2.3	7	1.90%
City of Cupertino	3.7	9	1.39%	2.0	10	1.65%
Morgan Hill City Water Department	3.6	10	1.35%	2.0	9	1.65%
Total	$ 248.6		93.14%	$ 110.6		91.18%
Total Water Sales	$ 266.9			$ 121.3		

Source: Santa Clara Valley Water District, Revenue Management Unit

Valley Water
Water Enterprise Rates Summary
Last Ten Fiscal Years
(Rates in Dollars per Acre-foot)

Fiscal Year	Groundwater Rates				Treated Water Rates	
	Zone W-2		Zone W-5			
	AG	Non-AG	AG	Non-AG	Contract	Non Contract
2011	16.50	520.00	16.50	275.00	620.00	570.00
2012	17.10	569.00	17.10	285.00	669.00	619.00
2013	17.70	622.00	17.70	295.00	722.00	672.00
2014	18.30	680.00	18.30	305.00	780.00	755.00
2015	19.14	747.00	19.14	319.00	847.00	897.00
2016	21.36	894.00	21.36	356.00	994.00	1,094.00
2017	23.59	1,072.00	23.59	393.00	1,172.00	1,272.00
2018	25.09	1,175.00	25.09	418.00	1,375.00	1,375.00
2019	27.02	1,289.00	27.02	450.00	1,389.00	1,339.00
2020	28.86	1,374.00	28.86	481.00	1,474.00	1,574.00

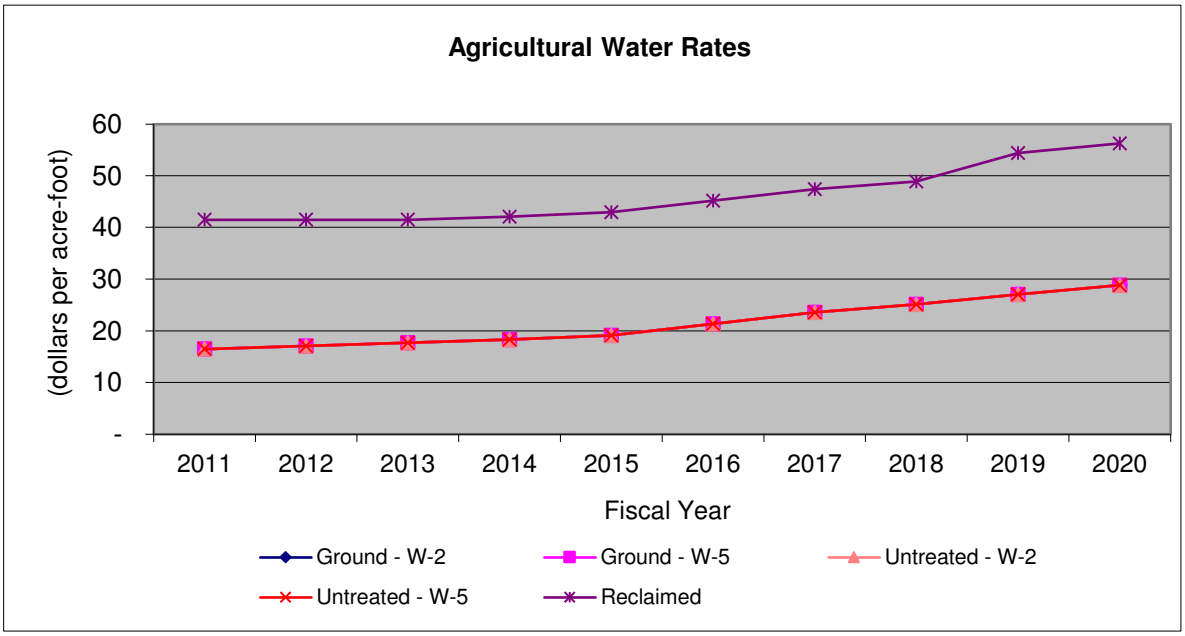

Source: Santa Clara Valley Water District, Wells & Water Production Unit

Untreated Water Rates				Reclaimed Water Rates	
Zone W-2		Zone W-5			
AG	Non-AG	AG	Non-AG	AG	Non-AG
16.50	520.00	16.50	275.00	41.50	275.00
17.10	569.00	17.10	285.00	41.50	275.00
17.70	622.00	17.70	295.00	41.50	275.00
18.30	680.00	18.30	305.00	42.10	285.00
19.14	747.00	19.14	319.00	42.94	299.00
21.36	894.00	21.36	356.00	45.16	336.00
23.59	1,072.00	23.59	393.00	47.38	373.00
25.09	1,175.00	25.09	418.00	48.88	398.00
27.02	1,289.00	27.02	450.00	54.41	430.00
28.86	1,374.00	28.86	481.00	56.25	461.00

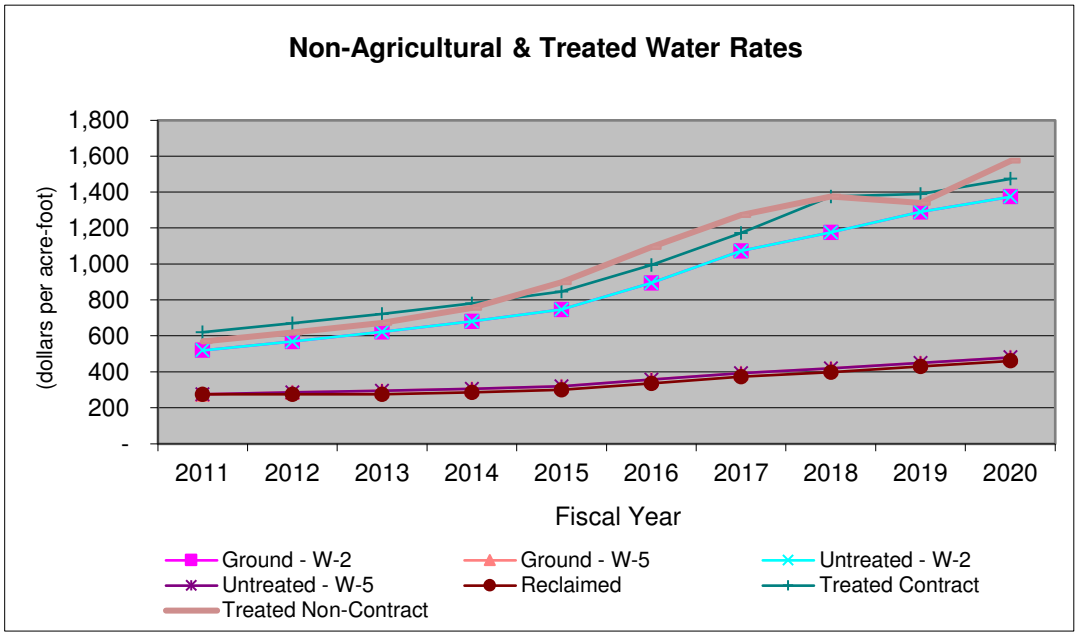

Valley Water
Assessed and Estimated Actual Value of Taxable Property
Last Ten Fiscal Years
(Dollars in Thousands)

Fiscal Year	Net Local Secured	SBE	Total Secured	Net Unsecured	Total (a)	Exempt Valuation Secured HOPTR (b)	Total (c) = (a+b)	District Direct Rate (d)	Total District Direct Tax (c x d)
2011	$ 274,020,130	$ 595,208	$ 274,615,338	$ 19,652,921	$ 294,268,259	$ 2,007,881	$ 296,276,140	0.0072%	$ 21,331.88
2012	275,581,705	557,469	276,139,174	20,791,740	296,930,914	1,978,658	298,909,572	0.0064%	19,130.21
2013	283,903,536	525,302	284,428,838	22,225,683	306,654,521	1,951,818	308,606,339	0.0069%	21,293.84
2014	308,939,519	596,002	309,535,521	23,021,092	332,556,613	1,920,733	334,477,346	0.0070%	23,413.41
2015	332,220,200	577,096	332,797,296	22,417,252	355,214,548	1,891,373	357,105,921	0.0065%	23,211.88
2016	362,318,558	594,415	362,912,973	23,239,529	386,152,502	1,874,832	388,027,334	0.0057%	22,117.56
2017	392,058,176	524,128	392,582,304	24,439,939	417,022,243	1,850,004	418,872,247	0.0086%	36,023.01
2018	420,616,061	476,901	421,092,962	26,855,499	447,948,461	1,824,379	449,772,840	0.0062%	27,885.92
2019	452,259,125	451,125	452,710,250	28,342,158	481,052,408	1,808,872	482,861,280	0.0042%	20,280.17
2020	484,249,401	442,613	484,692,014	29,026,589	513,718,603	1,791,435	515,510,038	0.0041%	21,135.91

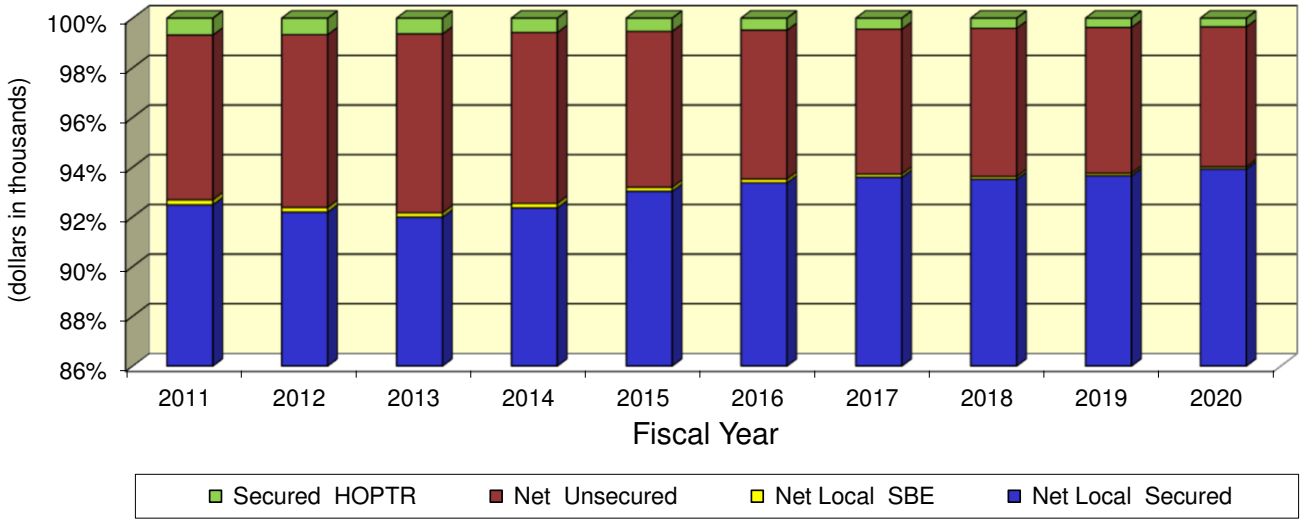

Source: County of Santa Clara Compilation of Tax Rates & Information

Valley Water
Property Tax Rates-Direct and Overlapping Governments
Last Ten Fiscal Years

Fiscal Year	Basic County Wide Levy	County	Cities	Santa Clara Valley Water District	Schools and Other Districts	Total Tax Rate
2011	1.0000%	0.0388%	0.0350%	0.0072%	0.1820%	1.2630%
2012	1.0000%	0.0388%	0.0334%	0.0064%	0.1763%	1.2549%
2013	1.0000%	0.0388%	0.0316%	0.0069%	0.1807%	1.2580%
2014	1.0000%	0.0388%	0.0279%	0.0070%	0.1687%	1.2424%
2015	1.0000%	0.0388%	0.0253%	0.0065%	0.1702%	1.2408%
2016	1.0000%	0.0388%	0.0223%	0.0057%	0.1949%	1.2617%
2017	1.0000%	0.0388%	0.0207%	0.0086%	0.1896%	1.2577%
2018	1.0000%	0.0597%	0.0186%	0.0062%	0.2087%	1.2932%
2019	1.0000%	0.0565%	0.0170%	0.0042%	0.2095%	1.2872%
2020	1.0000%	0.0557%	0.0226%	0.0041%	0.1846%	1.2670%

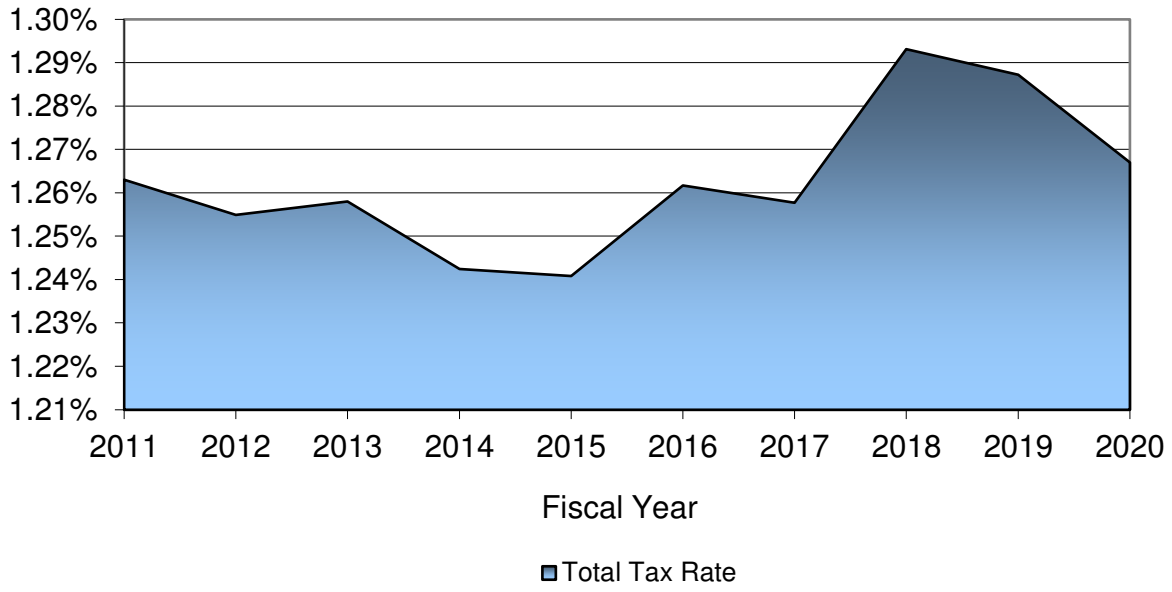

Source: County of Santa Clara, Department of Finance (tax rate area 17-028)

Valley Water
Principal Property Tax Payers
Current year and Nine years ago
(Dollars in Thousands)

	Fiscal Year 2020[2]			Fiscal Year 2011[3]		
Taxpayer	Taxable Assessed Value[1]	Rank	Percentage of Taxable Assessed Value	Taxable Assessed Value[1]	Rank	Percentage of Taxable Assessed Value
Leland Stanford Jr, University	$ 6,983,802	1	1.35%			
Google Inc.	6,283,409	2	1.22%			
Campus Holdings Inc.	3,570,308	3	0.69%			
Sobrato Interests	2,249,529	4	0.44%			
Essex Portfolio LP	1,884,353	5	0.37%			
Apple Computer Inc.	1,634,773	6	0.32%	$ 972,198	4	0.33%
Cisco Technology	1,618,351	7	0.31%	1,213,574	2	0.41%
Intel Corporation	1,030,820	8	0.20%	698,963	8	0.24%
VF Mall LLC	928,753	9	0.18%			
Lockheed Missiles and Space Co. Inc.	928,354	10	0.18%			
Applied Materials Inc.	892,091	11	0.17%			
FRIT San Jose Town & Country Village LLC	866,976	12	0.17%			
San Jose Water Works	840,794	13	0.16%			
CW SPE LLC	756,467	14	0.15%			
Trishman Speyer Archstone-Smith	684,287	15	0.13%			
Samsung Electronics America, Inc.	683,044	16	0.13%			
Yahoo Holdings Inc.	669,497	17	0.13%	593,084	9	0.20%
River View Apartments LLC	666,236	18	0.13%			
Menlo & Juniper Networks LLC	623,437	19	0.12%			
Xeres Ventures LLC	586,734	20	0.11%			
Pacific Gas & Electric Co.				1,652,772	1	0.56%
Pacific Bell dba AT&T CA				469,557	10	
Blackhawk Development				1,050,470	3	0.35%
Silicon Valley CA, LLC				814,802	6	
Westfield Malls				813,341	7	0.27%
The Irvine Company, LLC				908,310	5	0.31%
Total	$ 34,382,015		6.66%	$ 9,187,071		2.67%
Net Assessed Value of Taxable Property	$ 515,510,038			$ 296,276,140		

[1] Includes taxable properties only.
[2] Source: California Municipal Statistics, Inc.
[3] Source: Santa Clara County Tax Collector's Office

Valley Water
Computation of District Act Debt Margin
June 30, 2020
(Dollars in Millions)

Authorized short-term debt under authority of District Act Section 25.6	$	8.0
Outstanding short-term debt under Section 25.6, June 30, 2020		-
District Act Section 25.6 debt margin on short-term debt	$	8.0

Note:
The Santa Clara Valley Water District's debt issuance practices are governed by the provisions of California law and Section 25.6 of the special legislation which formed the Santa Clara Valley Water District (the District Act). The District Act sets the limit on short term debt obligations (maturity of less than five years) at $8,000,000.

The District may also issue short term notes under the tax and revenue anticipation note statute included in the California Government Code (sections 53850-53858). Under the tax and revenue anticipation note statute, the District may issue notes, provided the principal and interest are not to exceed 85% of the uncollected revenues of the District on the date such notes are issued (and subject to certain other limitations including a 15 month maturity provision). Section 53851 provides that the tax and revenue anticipation note statute is separate authority for the District to issue notes and any amount borrowed under the tax and revenue anticipation note statute is not limited by any other provision of law.

The District has elected to issue notes under the tax and revenue anticipation note statute to support the commercial paper program because it allows a larger amount of notes to be issued even though there is a shorter limitation on maturities.

The District is in compliance with its District Act and the debt issuance provisions of California law.

Valley Water
Ratio of Outstanding Debt by Type
Last Ten Fiscal Years
(Dollars in Millions, Except Per Capita)

	Governmental Activities		Business-type Activities	
Fiscal Year	General Obligation Bonds	Certificate of Participation	General Obligation Bonds	Revenue Bonds/ Certificate of Participation
2011	$ -	$ 142.1	$ 0.4	$ 213.3
2012	-	132.5	-	208.4
2013	-	131.2	-	201.8
2014	-	122.4	-	201.5
2015	-	117.1	-	191.5
2016	-	108.4	-	440.1
2017	-	105.5	-	443.6
2018	-	95.3	-	423.8
2019	-	85.1	-	509.2
2020	-	75.4	-	495.0

Source: Santa Clara Valley Water District, General Accounting Unit

Total Primary Government	Percentage of Personal Income	Per Capita
$ 355.8	0.3180%	$ 188
340.9	0.2788%	179
333.0	0.2549%	181
323.9	0.2283%	173
308.6	0.2154%	163
548.5	0.3163%	285
549.1	0.2890%	283
519.1	0.2483%	267
594.3	0.2815%	304
570.4	0.2675%	291

Valley Water
Revenue Bond Coverage
Last Ten Fiscal Years
(Dollars in Millions)

	2011	2012	2013	2014
Adjusted revenues	$ 133.7	$ 154.8	$ 171.1	$ 182.3
Adjusted operating expenses	108.1	111.5	111.1	118.1
Net revenue	25.6	43.3	60.0	64.2
Senior debt obligations				
Net revenue available for debt service	25.6	43.3	60.0	64.2
Debt obligation				
Principal	5.0	5.2	7.0	7.0
Interest	8.0	7.9	7.6	7.5
Debt service requirement	13.0	13.1	14.6	14.5
Coverage factor (1.25 required) [1]	1.96	3.28	4.11	4.42
Parity obligations				
Net revenue available for debt service				
Debt obligation				
Principal				
Interest				
Debt service requirement				
Coverage factor (1.25 required) [2]				
Senior/parity/subordinate obligations				
Net revenue available for debt service				
Debt obligation - senior and parity				
Senior				
Parity				
subordinate				
Debt service requirement				
Coverage factor (1.10 required) [3]				

Source: Santa Clara Valley Water District General Accounting Unit

In July 1994, the District refunded its outstanding water revenue bonds and restructured its debt covenants under a Senior Master Resolution (94-58, as amended by 06-80) governing the issuance of all Water Utility System Senior debt obligations, including the method of calculating Senior Debt Service coverage ratio.

In February 2016, the District Board adopted the Water Utility Parity System Master Resolution (16-10) governing issuance of all Water Utility System Parity debt obligations, calculating the method of calculating Parity Debt Service coverage ratio.

Prescribed by the aformentioned Master Resolutions, operating revenues and expenses include adjustments which relate primarily to intergovernmental revenues, depreciation and amortization, other post employment benefits, and compensated absences and claims.

2015	2016	2017	2018	2019	2020
$ 154.7	$ 182.4	$ 207.9	$ 254.2	$ 242.3	$ 284.6
130.9	141.4	130.3	172.4	148.1	146.6
23.8	41.0	77.6	81.8	94.2	138.0
23.8	41.0	77.6	81.8	94.2	138.0
7.5	3.9	3.8	2.1	2.2	0.8
7.5	6.1	4.8	1.8	2.1	1.5
15.0	10.0	8.6	3.9	4.3	2.3
1.59	4.10	8.97	21.16	21.94	60.00
	31.0	69.0	77.9	89.9	135.7
	-	-	6.3	8.6	12.3
	2.1	12.4	15.0	15.1	18.6
	2.1	12.4	21.3	23.7	30.9
	14.97	5.54	3.67	3.78	4.39
	41.0	77.6	81.8	94.2	138.0
	10.0	8.6	3.9	4.3	2.3
	2.1	12.4	21.3	23.7	30.9
	0.2	-	0.4	1.7	0.3
	12.3	21.0	25.6	29.7	33.5
	3.34	3.68	3.21	3.17	4.12

(1) The senior obligation minimum debt service coverage requirement is 1.25, per the Water Utility Senior Master Resolution (94-58, as amended by 06-80).

(2) The parity obligation minimum debt service coverage requirement is 1.25, per the Parity Master Resolution (16-10).

(3) The senior/parity/subordinate obligation minimum debt service coverage requirement is 1.10, per the Water Utility Senior Master Resolution (94-58, as amended by 06-80).

Dollar amounts rounded to the thousands prior to fiscal year 2020 were rounded to the millions for comparability; totals and ratios for these periods may not add due to independent rounding.

Valley Water
Computation of Direct and Overlapping Debt
June 30, 2020

2019-20 Assessed Valuation	515,510,038,000		
DIRECT AND OVERLAPPING TAX AND ASSESSMENT DEBT:	Total Debt-06/30/2020	% Applicable[1]	District's Share of Debt-06/30/2020
Santa Clara County	$ 881,455,000	100%	$ 881,455,000
Foothill-DeAnza Community College District	607,960,590	100%	607,960,590
San Jose-Evergreen Community College District	857,235,939	100%	857,235,939
West Valley-Mission Community College District	617,330,000	99.045%	611,434,499
Other Community College Districts	387,453,748	0.052-75.229%	93,473,580
Gilroy Unified School District	284,057,495	100%	284,057,495
Palo Alto Unified School District	273,760,962	100%	273,760,962
San Jose Unified School District	527,019,025	100%	527,019,025
Santa Clara Unified School District	1,043,175,000	100%	1,043,175,000
Other Unified School Districts	342,675,270	1.143-100%	285,758,085
Campbell Union High School District	372,245,000	100%	372,245,000
East Side Union High School District	903,308,548	100%	903,308,548
Fremont Union High School District	520,515,088	100%	520,515,088
Other High School Districts	316,758,515	0.551-100%	215,800,901
Campbell School District	218,860,233	100%	218,860,233
Cupertino Union School District	281,813,303	100%	281,813,303
Evergreen School District	143,994,612	100%	143,994,612
Franklin McKinley School District	138,154,978	100%	138,154,978
Los Altos School District	177,350,000	100%	177,350,000
Los Gatos Union School District	76,655,000	100%	76,655,000
Moreland School District	98,962,251	100%	98,962,251
Oak Grove School District	228,549,095	100%	228,549,095
Sunnyvale School District	217,180,820	100%	217,180,820
Other School Districts	737,788,043	4.444-100%	730,512,123
City of Gilroy	27,087,578	100%	27,087,578
City of Palo Alto	58,775,000	100%	58,775,000
City of San Jose	468,980,000	100%	468,980,000
City of Saratoga	8,075,000	100%	8,075,000
Saratoga Fire Protection District	2,533,961	100%	2,533,961
El Camino Hospital District	120,690,000	100%	120,690,000
City Community Facilities Districts	31,121,325	100%	31,121,325
City of San Jose Special Assessment Bonds	7,505,000	100%	7,505,000
Other City 1915 Act Bonds (Estimated)	27,615,000	100%	27,615,000
Midpeninsula Regional Open Space District	88,810,000	67.377%	59,837,514
Santa Clara Valley Water District Benefit Assessment District	**65,495,000**	**100%**	65,495,000
TOTAL DIRECT AND OVERLAPPING TAX AND ASSESSMENT DEBT			$ 10,666,947,505

Ratios to the 2019-20 Assessed Valuation		
Direct Debt	($65,495,000)	0.01%
Total Direct and Overlapping Tax and Assessment Debt		2.07%

OVERLAPPING GENERAL FUND DEBT:	Total Debt-06/30/2020	% Applicable[1]	District's Share of Debt-06/30/2020
Santa Clara County General Fund Obligations	$ 966,725,100	100%	$ 966,725,100
Santa Clara County Pension Obligation Bonds	346,996,639	100%	346,996,639
Santa Clara County Office of Education Certificates of Participation	3,480,000	100%	3,480,000
Foothill-De Anza Community College District General Fund Obligations	24,092,620	100%	24,092,620
San Jose-Evergreen Community College District Other Post-Employment Benefit Obligations	47,450,000	100%	47,450,000
Gavilan Joint Community College District General Fund Obligations	6,925,000	75.229%	5,209,608
West Valley-Mission Community College District General Fund Obligations	50,780,000	99.045%	50,295,051
Gilroy Unified School District Certificates of Participation	24,245,000	100%	24,245,000
Other Unified School District School General Fund Obligations	59,474,057	1.143-100%	48,604,730
East Side Union High School District Benefit Obligations	27,475,000	100%	27,475,000
Other Union High School District General Fund Obligations	28,177,797	.0554-100%	25,344,968
Alum Rock Union School District Certificates of Participation	15,920,000	100%	15,920,000
Other School District General Fund Obligations	14,963,159	20.951-100%	14,743,403
City of Cupertino Certificates of Participation	27,010,000	100%	27,010,000
City of Gilroy Certificates of Participation	35,710,000	100%	35,710,000
City of San Jose General Fund Obligations	407,780,000	100%	407,780,000
City of Santa Clara General Fund Obligations	15,000,000	100%	15,000,000
City of Sunnyvale General Fund Obligations	13,145,000	100%	13,145,000
Other City General Fund Obligations	61,420,843	100%	61,420,843
Santa Clara County Vector Control District Certificates of Participation	2,010,000	100%	2,010,000
Midpeninsula Regional Park District General Fund Obligations	111,985,600	67.377%	75,452,538
TOTAL GROSS OVERLAPPING GENERAL FUND DEBT			$ 2,238,110,500
Less: Santa Clara County supported general fund obligations			32,131,373
TOTAL NET OVERLAPPING GENERAL FUND DEBT			$ 2,205,979,127
OVERLAPPING TAX INCREMENT DEBT:	$ 1,764,745,000	100%	$ 1,764,745,000

TOTAL DIRECT DEBT	**$ 65,495,000**
TOTAL GROSS COMBINED OVERLAPPING DEBT	$ 14,604,308,005
TOTAL NET COMBINED OVERLAPPING DEBT	$ 14,572,176,632
GROSS COMBINED TOTAL DEBT	$ 14,669,803,005 [2]
NET COMBINED TOTAL DEBT	$ 14,637,671,632

(1) The percent of overlapping debt applicable to the Water District is estimated using taxable assessed property value. Applicable percentages were estimated by determining the portion of the overlapping district's assessed value that is within the boundaries of the Water District divided by the district's total taxable assessed value.

(2) Excludes tax and revenue anticipation notes, enterprise revenue, mortgage revenue and non-bonded capital lease obligations. Qualified Zone Academy Bonds are included based on principal due at maturity.

Ratios to the 2019-20 Assessed Valuation	Ratio
Total Direct Debt	0.01%
Gross Combined Total Debt	2.85%
Net Combined Total Debt	2.84%
Ratio to Redevelopment Incremental Valuation ($58,410,378,854)	
Total Overlapping Tax Increment Debt	3.02%

Source: California Municipal Statistics, Inc.

Valley Water
Demographic and Economic Statistics
For Santa Clara County
Last Ten Fiscal Years

Fiscal Year	Population [1]	Personal Income (in $000) [2]	Per Capita Personal Income (in $000)	Change In Consumer Price Index[3]	School Enrollment [4]	Total Employment [5]	Unemployment Rate [5]
2011	1,890,909	$ 111,880,131	59.167	1.1%	266,267	798,200	9.9%
2012	1,899,567	122,259,021	64.362	0.9%	270,109	794,236	8.5%
2013	1,842,254	130,624,491	70.905	1.4%	273,701	865,900	6.8%
2014	1,868,558	141,873,705	75.927	3.0%	276,175	879,500	5.4%
2015	1,889,638	143,292,442	75.831	2.3%	276,689	993,400	3.7%
2016	1,927,888	173,428,896	89.958	2.7%	274,948	996,800	4.0%
2017	1,938,180	190,001,690	98.031	3.5%	273,264	992,900	3.8%
2018	1,947,798	209,019,944	98.522	3.9%	272,132	1,035,600	2.7%
2019	1,954,286	211,110,143	99.177	2.7%	267,224	1,026,700	2.6%
2020	1,961,969	213,221,244	108.677	1.6%	263,449	926,700	10.7%

Source: [1] State of California - Department of Finance, Demographics & Research Unit.
[2] U.S. Department of Commerce - Bureau of Economic Analysis;
actual data available up to 2018;personal income data for 2019 & 2020 are preliminary
and assumes a 1% increase from prior year.
[3] U.S. Department of Labor - Bureau of Labor Statistics - San Francisco Bay Region
[4] State of California - Department of Education and Santa Clara County Office of Education (grades K to 12)
[5] State of California - Employment Development Department

Valley Water
Principal Employers
Current Year and Nine Years ago
(unaudited)

	Fiscal Year 2020			Fiscal Year 2011		
Company or Organization	Employees[1]	Rank	Percentage of Total County Employment	Employees[2]	Rank	Percentage of Total County Employment
Apple Inc.	25,000	1	2.70%	10,000	2	1.25%
Google, Inc. / Alphabet	23,000	2	2.48%			
County of Santa Clara	18,570	3	2.00%			
Stanford University	15,576	4	1.68%			
Facebook Inc.	15,407	5	1.66%			
Tesla Motors Inc.	15,000	6	1.62%			
Stanford Health Care	14,143	7	1.53%			
Cisco Systems	13,683	8	1.48%	13,000	1	1.63%
Kaiser Permanente Northern California	12,500	9	1.35%			
University of California Santa Cruz	8,915	10	0.96%			
Safeway	8,509	11	0.92%			
Gilead Sciences Inc.	8,268	12	0.89%			
Intel Corp.	7,975	13	0.86%	5,000	3	0.63%
City of San Jose	7,728	14	0.83%			
Applied Materials Inc.	6,200	15	0.67%			
Nvidia Corp	6,000	16	0.65%			
Target Corp.	5,500	17	0.59%			
Juniper Networks Inc.	5,130	18	0.55%			
San Mateo County	5,103	19	0.55%			
Stanford Children's Health	5,005	20	0.54%	2,951	9	0.37%
Maxim Integrated Products, Inc.				4,706	4	0.59%
JDS Uniphase Corp.				4,000	5	0.50%
Santa Clara Valley Medical Center				3,500	6	0.44%
Flextronics International				3,490	7	0.44%
Yahoo, Inc.				3,000	8	0.38%
Adobe Systems, Inc.				2,700	10	0.34%
Total	227,212		24.51%	52,347		6.57%
Total County Employment[3]	926,700			798,200		

Source: [1] Silicon Valley Business Journal
[2] Rich's Business Information - Santa Clara County
[3] State of California - Employment Development Department

Valley Water
Full-time Equivalent District Employees by Function/Program
Last Ten Fiscal Years

Function/Program	Fiscal Year 2011	2012	2013	2014	2015	2016	2017	2018	2019	2020
Office of the CEO	11	10	10	10	10	10	11	11	17	20
Office of the District Counsel	9	9	9	9	9	9	10	10	11	11
Community & Government Relations	7	8	8	8	8	18	23	27	28	32
County-Wide Watershed Management	117	105	98	98	98	112	109	109	133	133
Capital Programs	143	126	117	112	115	118	112	112	108	111
Water Utility Operations	43	43	43	43	43	43	43	43	41	41
Water Supply	11	11	11	11	11	11	11	11	8	8
Water Conservation	10	10	10	10	10	10	11	11	12	12
Surface & Groundwater Management	34	34	34	34	34	36	33	33	35	35
Water Quality	22	22	22	22	22	22	28	28	24	24
Control Systems	11	11	11	11	11	11	14	14	14	14
Water Utility Maintenance	23	23	23	23	23	23	28	28	28	28
Treated Water Operations	36	36	36	36	36	38	44	44	43	43
Raw Water Operations	25	25	25	25	25	28	37	37	37	40
Administrative & Business Management	11	8	8	8	8	8	11	11	3	5
Clerk of the Board	12	12	12	12	12	12	14	14	10	10
Organizational Training & Development	6	6	6	6	6	6	4	4	4	8
Business Support Services	16	16	16	16	16	16	16	16	20	25
Library & Records	6	6	6	6	6	6	5	5	6	6
Budget Office	8	8	8	8	8	8	7	7	7	10
Accounting	18	18	18	16	18	18	17	17	16	16
Information & Systems Management	43	39	39	39	39	39	36	36	32	32
Technical Services	3	3	3	3	3	3	3	3	3	3
Wells & Water Production	18	18	18	18	18	18	18	18	15	15
Real Estate & Right-of-Way	8	8	8	8	8	9	10	10	8	10
Equipment Management	12	12	12	12	12	12	12	12	10	10
Warehouse & Inventory Control	6	6	6	6	6	6	5	5	5	5
Facilities Maintenance	15	15	15	15	15	15	15	15	14	16
Purchasing	9	9	9	9	9	10	10	10	9	12
Permits	16	16	16	13	16	16	14	14	16	16
Contracts Administration	5	4	4	4	4	5	5	5	5	10
Human Resources & Benefits	21	21	21	19	21	21	18	18	22	22
Health & Safety	6	6	6	10	6	6	10	10	9	9
Total	741	704	688	680	686	723	744	748	753	792

Source: Santa Clara Valley Water District, Human Resources & Benefits Unit

Valley Water
Operating Indicators by Function/Program
Last Ten Fiscal Years

Function/Program	Fiscal Year 2011	2012	2013	2014	2015	2016	2017	2018	2019	2020
District Well Ordinance Program										
New Wells	775	541	443	513	407	424	321	410	325	298
Destroyed Wells	653	531	502	744	1,504	1,167	945	463	494	387
Well Permits	1,626	1,740	1,265	1,697	2,285	1,799	1,546	1,272	1,078	1,123
Well Inspections	1,517	1,350	1,080	1,398	2,092	1,848	1,687	1,093	1,030	1,163
Watershed Management									-	
Miles of Vegetation Removed/Managed	175	241	221	206	177	164	116	168	163	161
Cubic Yards of Sediment Removed	15,623	32,456	21,456	34,596	4,129	3,929	83,792	34,881	19,279	49,641
Miles of Bank Erosion Protection	1.8	0.5	1.1	2.1	0.2	1.2	0.5	0.5	0.2	0.3
Laboratory Services Unit										
Water Samples Tested (approx.)	132,638	111,265	158,082	170,055	169,182	178,934	179,252	156,347	151,118	151,500
Water Quality Violations	-	-	-	-	-	-	-	-	-	-
Water Measurement Program										
Meter Reads/Site Visits	5,981	5,939	6,019	5,964	5,908	5,934	5,489	6,264	5,384	6,740
Meter Repairs/Preventative Maintenance	328	316	313	272	201	323	301	307	381	183
Backflow Device Tests	170	151	177	159	203	153	149	227	188	217
Community Projects Review										
Permits Issued	229	220	257	201	220	289	228	177	160	137
Land Development Review Requests	1,030	964	865	940	843	45	124	749	938	809
Underground Service Alerts	28,651	37,348	46,599	53,782	58,871	12,118	8,042	8,529	9,859	8,560
Requests for Flood Zone Information	90	70	72	51	24	92	26	18	18	11
Environmental Impact Reports Reviewed	107	55	33	65	68	32	56	53	83	82
Water Resource Protec. Ordinance Violations	125	234	193	184	130	220	163	186	208	240
Human Resources										
Permanent Positions Hired	13	17	21	31	54	150	112	133	79	162
Temporary Workers Employed	121	112	140	247	134	276	259	122	108	110
Employment Applications Processed	1,000	2,685	1,524	4,236	5,746	5,621	5,847	5,668	5,370	7,860
Health & Safety										
Ergonomic Assessments	44	36	39	38	42	46	44	47	37	12
Confined Space Assessments	247	117	139	261	147	204	120	223	192	205
Employee Safety Committee Meetings	10	11	9	11	12	12	12	11	8	6
Projects Managed by Type:										
Capital Projects	138	129	126	131	160	165	121	130	121	114
Operating Projects	46	48	43	36	35	39	23	29	17	16
Operations Projects	354	365	396	394	415	409	358	351	335	328

Source: Santa Clara Valley Water District, various government departments

Valley Water
Capital Asset Statistics by Function/Program
Last Ten Fiscal Years

Function/Program	Fiscal Year 2011	2012	2013	2014	2015	2016	2017	2018	2019	2020
Water Utility Enterprise										
Acres of groundwater recharge ponds	393	393	393	393	393	393	393	393	393	393
Miles of canals	17	17	17	17	17	17	17	17	17	17
Miles of pipeline	143	144	144	144	144	144	144	144	144	144
Miles of tunnels	8	8	8	8	8	8	8	8	8	8
Number of treatment plants	3	4	4	4	4	4	4	4	4	4
Number of pumping stations	5	5	5	5	5	5	5	5	5	5
Number of treated water reservoirs	1	1	1	1	1	1	1	1	1	1
Water Utility Operations										
Process Control Instrumentation	1128	1161	1406	1,680	1,443	1,493	1,548	1,534	1,542	1,710
Mechanical Drives	54	54	72	61	56	73	58	61	61	61
Chemical Mixers	87	87	89	111	95	95	92	88	88	126
Electrical Motors	407	432	452	512	439	455	468	464	468	531
Power Distribution Equipment	736	913	1248	1,673	1,140	1,155	1,089	859	870	890
Pumps	496	515	547	601	515	518	517	518	517	584
Utility Vaults & Structures	1050	1051	1062	1,095	1,114	1,340	1,156	1,122	1,166	1,195
Chemical & Water Storage Tanks	179	192	199	176	174	203	168	173	196	202
Valves	1059	1070	1613	1,702	1,600	1,676	1,695	1,710	1,758	1,987
Valve Operators	577	579	799	869	783	782	781	782	789	841
Generators	23	26	25	27	25	29	29	27	30	33
Flow Meters	271	296	381	387	347	377	399	360	361	395
Electric Drives	160	170	173	208	165	162	172	183	191	196
Blowers & Compressors	164	174	146	208	188	185	184	181	187	188
Miscellaneous Equipment	459	467	477	3,306	1,441	1,350	1,356	1,322	1,327	1,345
Watersheds										
Miles of creeks and rivers managed for flood control	700	700	700	700	700	700	700	800 +*	800 +*	800 +*
Number of reservoirs	10	10	10	10	10	10	10	10	10	10
Total District reservoir capacity (acre-feet)	169,415	169,415	169,415	169,415	169,415	169,415	169,415	169,415	169,415	169,415
Acres of Wildlife Habitat Restored	N/A	N/A	569	569	326	326	310	364	364	364
Fleet Equipment										
Class I Passenger Vehicles	190	190	185	186	182	184	179	178	178	175
Class II Heavy Duty Trucks	79	78	82	84	87	82	90	94	94	97
Class III Tractors, Const. Equip., Generators, Forklifts	25	26	24	27	26	26	21	26	26	26
Class IV Misc. Small Tools & Engines	648	643	655	474	506	506	534	478	415	521

Source: Santa Clara Valley Water District, various government departments

* There are more than 800 miles of creeks in Santa Clara County (SC Co.). SCVWD owns 278 miles of streams in SC Co. Only a portion of these have been modified with flood protection projects. Those are the streams that are maintained by SCVWD.

Valley Water
Flood Control System
Historical Operating Results
Combined Statement of Revenues and Debt Service Coverage
Last Ten Fiscal Years
(Dollars in Millions)

	2011	2012	2013	2014
Flood Control System Revenues:				
Benefit assessment, gross[1]	$ 19.3	$ 19.3	$ 19.4	$ 16.3
Property tax	47.6	48.5	55.6	57.6
Investment income	1.1	0.6	0.2	1.0
Rental income	1.1	1.2	1.2	1.3
Other	0.6	0.8	1.3	0.7
Total Flood Control System Revenue	$ 69.7	$ 70.4	$ 77.7	$ 76.9
Debt Service:				
2003A Certificates of participation[2]	$ 7.0	$ 6.0	$ 1.1	$ -
2004A Certificates of participation[3/4]	2.4	2.3	2.4	1.4
2007A Certificates of participation[3]	5.8	5.8	5.8	5.8
2012A Certificates of participation	-	-	6.4	6.1
2017A Certificates of participation[4]	-	-	-	-
Total Debt Service	$ 15.2	$ 14.1	$ 15.7	$ 13.3
Coverage	4.61	5.00	4.95	5.80

1 The benefit assessment presented on the Statement of Revenues, Expenditures and Changes in Fund Balances are net of collection fees. For the purpose of the Flood Control System Debt Service Coverage, collection fees are excluded. Therefore, the benefit assessments presented above have been increased as follows (in thousands):

FY2020 - $ 135
FY2019 - $ 149
FY2018 - $ 148
FY2017 - $ 149
FY2016 - $ 149
FY2015 - $ 162
FY2014 - $ 163
FY2013 - $ 194
FY2012 - $ 193
FY2011 - $ 193

In accordance with voter authorizations, benefit assessments are set at 1.25 of gross debt service allocable to to flood control projects starting during Fiscal Year 2001.

Source: Santa Clara Valley Water District, General Accounting Unit

2015	2016	20175	2018	2019	2020
$ 16.2	$ 14.8	$ 14.9	$ 14.9	$ 14.9	$ 13.5
62.9	68.0	74.8	79.5	90.7	93.1
0.9	1.3	0.3	0.7	4.9	5.2
1.4	1.5	1.5	1.6	1.7	1.7
0.6	1.2	1.9	4.0	1.7	1.6
$ 82.0	$ 86.8	$ 93.4	$ 100.7	$ 113.9	$ 115.1
$ -	$ -	$ -	$ -	$ -	$ -
1.3	1.1	1.1	-	-	-
5.8	5.8	5.8	-	-	-
6.1	5.3	5.3	5.3	5.3	5.3
-	-	-	6.9	6.9	5.8
$ 13.2	$ 12.2	$ 12.2	$ 12.2	$ 12.2	$ 11.1
6.21	7.14	7.68	8.29	9.37	10.37

[2] The 2003A Certificates were refunded by the 2012A Certificates.

[3] The 2004A and 2007A Certificates were refunded by the 2017A Certificates.

[4] The 2004A and 2017A debt service payments exclude the portion paid by the District General Fund as this portion of debt service was not payable from benefit assessments (see Flood Control Master Resolution 94-60).

[5] The Fiscal Year 2017 debt service coverage calculation was adjusted above to correct overstated debt service previously reported.

Dollar amounts rounded to the thousands prior to fiscal year 2020 were rounded to the millions for comparability; totals and ratios for these periods may not add due to independent rounding.

This page intentionally left blank

SANTA CLARA VALLEY WATER DISTRICT

MEMORANDUM ON INTERNAL CONTROL AND REQUIRED COMMUNICATIONS

FOR THE YEAR ENDED JUNE 30, 2020

This Page Left Intentionally Blank

SANTA CLARA VALLEY WATER DISTRICT

MEMORANDUM ON INTERNAL CONTROL
AND
REQUIRED COMMUNICATIONS

For the Year Ended June 30, 2020

Table of Contents

Page

Memorandum on Internal Control 1

Schedule of Other Matters 3

Required Communications 7

Significant Audit Findings:

Accounting Policies 7

Unusual Transactions, Controversial or Emerging Areas 8

Accounting Estimates 8

Disclosures 8

Difficulties Encountered in Performing the Audit 8

Corrected and Uncorrected Misstatements 9

Disagreements with Management 9

Management Representations 9

Management Consultations with Other Independent Accountants 9

Other Audit Finds or Issues 9

Other Information Accompanying the Financial Statements 9

This Page Left Intentionally Blank

MAZE & ASSOCIATES

MEMORANDUM ON INTERNAL CONTROL

Board of Directors
Santa Clara Valley Water District
San Jose, California

In planning and performing our audit of the financial statements of the Santa Clara Valley Water District (District), California, as of and for the year ended June 30, 2020, in accordance with auditing standards generally accepted in the United States of America, we considered the District's internal control over financial reporting (internal control) as a basis for designing our auditing procedures that are appropriate in the circumstances for the purpose of expressing our opinions on the financial statements, but not for the purpose of expressing an opinion on the effectiveness of the District's internal control. Accordingly, we do not express an opinion on the effectiveness of the District's internal control.

A deficiency in internal control exists when the design or operation of a control does not allow management or employees, in the normal course of performing their assigned functions, to prevent, or detect and correct misstatements on a timely basis. A material weakness is a deficiency, or a combination of deficiencies, in internal control, such that there is a reasonable possibility that a material misstatement of the District's financial statements will not be prevented, or detected and corrected, on a timely basis.

Our consideration of internal control was for the limited purpose described in the first paragraph and was not designed to identify all deficiencies in internal control that might be material weaknesses. In addition, because of inherent limitations in internal control, including the possibility of management override of controls, misstatements due to error or fraud may occur and not be detected by such controls. Given these limitations, during our audit we did not identify any deficiencies in internal control that we consider to be material weaknesses. However, material weaknesses may exist that have not been identified.

Included in the Schedule of Other Matters are recommendations not meeting the above definitions that we believe to be of potential benefit to the District.

This communication is intended solely for the information and use of management, Board of Directors, others within the organization, and agencies and pass-through entities requiring compliance with *Government Auditing Standards*, and is not intended to be and should not be used by anyone other than these specified parties.

Maze + Associates

Pleasant Hill, California
January 13, 2021

Accountancy Corporation
3478 Buskirk Avenue, Suite 215
Pleasant Hill, CA 94523

T 925.930.0902
F 925.930.0135
E maze@mazeassociates.com
W mazeassociates.com

This Page Left Intentionally Blank

SANTA CLARA VALLEY WATER DISTRICT

MEMORANDUM ON INTERNAL CONTROL

SCHEDULE OF OTHER MATTERS

NEW GASB PRONOUNCEMENTS OR PRONOUNCEMENTS NOT YET EFFECTIVE

The following comment represents new pronouncements taking affect in the next few years. We cite them here to keep you informed of developments:

EFFECTIVE FISCAL YEAR 2020/21:

GASB 84 – *Fiduciary Activities*

The objective of this Statement is to improve guidance regarding the identification of fiduciary activities for accounting and financial reporting purposes and how those activities should be reported.

This Statement establishes criteria for identifying fiduciary activities of all state and local governments. The focus of the criteria generally is on (1) whether a government is controlling the assets of the fiduciary activity and (2) the beneficiaries with whom a fiduciary relationship exists. Separate criteria are included to identify fiduciary component units and postemployment benefit arrangements that are fiduciary activities.

An activity meeting the criteria should be reported in a fiduciary fund in the basic financial statements. Governments with activities meeting the criteria should present a statement of fiduciary net position and a statement of changes in fiduciary net position. An exception to that requirement is provided for a business-type activity that normally expects to hold custodial assets for three months or less.

This Statement describes four fiduciary funds that should be reported, if applicable: (1) pension (and other employee benefit) trust funds, (2) investment trust funds, (3) private-purpose trust funds, and (4) custodial funds. Custodial funds generally should report fiduciary activities that are not held in a trust or equivalent arrangement that meets specific criteria.

A fiduciary component unit, when reported in the fiduciary fund financial statements of a primary government, should combine its information with its component units that are fiduciary component units and aggregate that combined information with the primary government's fiduciary funds.

This Statement also provides for recognition of a liability to the beneficiaries in a fiduciary fund when an event has occurred that compels the government to disburse fiduciary resources. Events that compel a government to disburse fiduciary resources occur when a demand for the resources has been made or when no further action, approval, or condition is required to be taken or met by the beneficiary to release the assets.

GASB 84 – *Fiduciary Activities (Continued)*

The primary objectives of this Statement are to improve the consistency and comparability of reporting a government's majority equity interest in a legally separate organization and to improve the relevance of financial statement information for certain component units. It defines a majority equity interest and specifies that a majority equity interest in a legally separate organization should be reported as an investment if a government's holding of the equity interest meets the definition of an investment. A majority equity interest that meets the definition of an investment should be measured using the equity method, unless it is held by a special-purpose government engaged only in fiduciary activities, a fiduciary fund, or an endowment (including permanent and term endowments) or permanent fund. Those governments and funds should measure the majority equity interest at fair value.

GASB 90 – *Majority Equity Interests—an amendment of GASB Statements No. 14 and No. 61)*

For all other holdings of a majority equity interest in a legally separate organization, a government should report the legally separate organization as a component unit, and the government or fund that holds the equity interest should report an asset related to the majority equity interest using the equity method. This Statement establishes that ownership of a majority equity interest in a legally separate organization results in the government being financially accountable for the legally separate organization and, therefore, the government should report that organization as a component unit.

This Statement also requires that a component unit in which a government has a 100 percent equity interest account for its assets, deferred outflows of resources, liabilities, and deferred inflows of resources at acquisition value at the date the government acquired a 100 percent equity interest in the component unit. Transactions presented in flows statements of the component unit in that circumstance should include only transactions that occurred subsequent to the acquisition.

The requirements of this Statement are effective for reporting periods beginning after December 15, 2018. Earlier application is encouraged. The requirements should be applied retroactively, except for the provisions related to (1) reporting a majority equity interest in a component unit and (2) reporting a component unit if the government acquires a 100 percent equity interest. Those provisions should be applied on a prospective basis.

EFFECTIVE FISCAL YEAR 2021/22:

GASB 87 – ***Leases***

The objective of this Statement is to better meet the information needs of financial statement users by improving accounting and financial reporting for leases by governments. This Statement increases the usefulness of governments' financial statements by requiring recognition of certain lease assets and liabilities for leases that previously were classified as operating leases and recognized as inflows of resources or outflows of resources based on the payment provisions of the contract. It establishes a single model for lease accounting based on the foundational principle that leases are financings of the right to use an underlying asset. Under this Statement, a lessee is required to recognize a lease liability and an intangible right-to-use lease asset, and a lessor is required to recognize a lease receivable and a deferred inflow of resources, thereby enhancing the relevance and consistency of information about governments' leasing activities.

A lease is defined as a contract that conveys control of the right to use another entity's nonfinancial asset (the underlying asset) as specified in the contract for a period of time in an exchange or exchange-like transaction. Examples of nonfinancial assets include buildings, land, vehicles, and equipment. Any contract that meets this definition should be accounted for under the leases guidance, unless specifically excluded in this Statement.

GASB 89 – ***Accounting for Interest Cost Incurred before the End of a Construction Period***

The objectives of this Statement are (1) to enhance the relevance and comparability of information about capital assets and the cost of borrowing for a reporting period and (2) to simplify accounting for interest cost incurred before the end of a construction period.

This Statement establishes accounting requirements for interest cost incurred before the end of a construction period. Such interest cost includes all interest that previously was accounted for in accordance with the requirements of paragraphs 5–22 of Statement No. 62, *Codification of Accounting and Financial Reporting Guidance Contained in Pre-November 30, 1989 FASB and AICPA Pronouncements,* which are superseded by this Statement. This Statement requires that interest cost incurred before the end of a construction period be recognized as an expense in the period in which the cost is incurred for financial statements prepared using the economic resources measurement focus. As a result, interest cost incurred before the end of a construction period will not be included in the historical cost of a capital asset reported in a business-type activity or enterprise fund.

This Statement also reiterates that in financial statements prepared using the current financial resources measurement focus, interest cost incurred before the end of a construction period should be recognized as an expenditure on a basis consistent with governmental fund accounting principles.

SANTA CLARA VALLEY WATER DISTRICT

MEMORANDUM ON INTERNAL CONTROL

SCHEDULE OF OTHER MATTERS

GASB 92 – *Omnibus 2020*

The objectives of this Statement are to enhance comparability in accounting and financial reporting and to improve the consistency of authoritative literature by addressing practice issues that have been identified during implementation and application of certain GASB Statements. This Statement addresses a variety of topics and includes specific provisions about the following:

- The effective date of Statement No. 87, Leases, and Implementation Guide No. 2019-3, Leases, for interim financial reports
- Reporting of intra-entity transfers of assets between a primary government employer and a component unit defined benefit pension plan or defined benefit other postemployment benefit (OPEB) plan
- The applicability of Statements No. 73, *Accounting and Financial Reporting for Pensions and Related Assets That Are Not within the Scope of GASB Statement 68, and Amendments to Certain Provisions of GASB Statements 67 and 68*, as amended, and No. 74, *Financial Reporting for Postemployment Benefit Plans Other Than Pension Plans*, as amended, to reporting assets accumulated for postemployment benefits
- The applicability of certain requirements of Statement No. 84, *Fiduciary Activities*, to postemployment benefit arrangements
- Measurement of liabilities (and assets, if any) related to asset retirement obligations (AROs) in a government acquisition
- Reporting by public entity risk pools for amounts that are recoverable from reinsurers or excess insurers
- Reference to nonrecurring fair value measurements of assets or liabilities in authoritative literature
- Terminology used to refer to derivative instruments.

GASB 97 – Certain Component Unit Criteria, and Accounting and Financial Reporting for Internal Revenue Code Section 457 Deferred Compensation Plans—An Amendment of GASB Statements No. 14 and No. 84, and a Supersession of GASB Statement No. 32

The primary objectives of this Statement are to (1) increase consistency and comparability related to the reporting of fiduciary component units in circumstances in which a potential component unit does not have a governing board and the primary government performs the duties that a governing board typically would perform; (2) mitigate costs associated with the reporting of certain defined contribution pension plans, defined contribution other postemployment benefit (OPEB) plans, and employee benefit plans other than pension plans or OPEB plans (other employee benefit plans) as fiduciary component units in fiduciary fund financial statements; and (3) enhance the relevance, consistency, and comparability of the accounting and financial reporting for Internal Revenue Code (IRC) Section 457 deferred compensation plans (Section 457 plans) that meet the definition of a pension plan and for benefits provided through those plans.

This Statement requires that for purposes of determining whether a primary government is financially accountable for a potential component unit, except for a potential component unit that is a defined contribution pension plan, a defined contribution OPEB plan, or an other employee benefit plan (for example, certain Section 457 plans), the absence of a governing board should be treated the same as the appointment of a voting majority of a governing board if the primary government performs the duties that a governing board typically would perform.

This Statement also requires that the financial burden criterion in paragraph 7 of Statement No. 84, Fiduciary Activities, be applicable to only defined benefit pension plans and defined benefit OPEB plans that are administered through trusts that meet the criteria in paragraph 3 of Statement No. 67, Financial Reporting for Pension Plans, or paragraph 3 of Statement No. 74, Financial Reporting for Postemployment Benefit Plans Other Than Pension Plans, respectively.

This Statement (1) requires that a Section 457 plan be classified as either a pension plan or an other employee benefit plan depending on whether the plan meets the definition of a pension plan and (2) clarifies that Statement 84, as amended, should be applied to all arrangements organized under IRC Section 457 to determine whether those arrangements should be reported as fiduciary activities.

This Statement supersedes the remaining provisions of Statement No. 32, Accounting and Financial Reporting for Internal Revenue Code Section 457 Deferred Compensation Plans, as amended, regarding investment valuation requirements for Section 457 plans. As a result, investments of all Section 457 plans should be measured as of the end of the plan's reporting period in all circumstances.

How the Changes in this Statement will Improve Financial Reporting

The requirements of this Statement will result in more consistent financial reporting of defined contribution pension plans, defined contribution OPEB plans, and other employee benefit plans, while mitigating the costs associated with reporting those plans. The requirements also will enhance the relevance, consistency, and comparability of (1) the information related to Section 457 plans that meet the definition of a pension plan and the benefits provided through those plans and (2) investment information for all Section 457 plans.

SANTA CLARA VALLEY WATER DISTRICT

MEMORANDUM ON INTERNAL CONTROL

SCHEDULE OF OTHER MATTERS

EFFECTIVE FISCAL YEAR 2022/23:

GASB 91 – *Conduit Debt Obligations*

The primary objectives of this Statement are to provide a single method of reporting conduit debt obligations by issuers and eliminate diversity in practice associated with (1) commitments extended by issuers, (2) arrangements associated with conduit debt obligations, and (3) related note disclosures. This Statement achieves those objectives by clarifying the existing definition of a conduit debt obligation; establishing that a conduit debt obligation is not a liability of the issuer; establishing standards for accounting and financial reporting of additional commitments and voluntary commitments extended by issuers and arrangements associated with conduit debt obligations; and improving required note disclosures.

A conduit debt obligation is defined as a debt instrument having *all* of the following characteristics:

- There are at least three parties involved:
  (1) an issuer
  (2) a third-party obligor, and
  (3) a debt holder or a debt trustee.

- The issuer and the third-party obligor are not within the same financial reporting entity.

- The debt obligation is not a parity bond of the issuer, nor is it cross-collateralized with other debt of the issuer.

- The third-party obligor or its agent, not the issuer, ultimately receives the proceeds from the debt issuance.

- The third-party obligor, not the issuer, is primarily obligated for the payment of all amounts associated with the debt obligation (debt service payments).

All conduit debt obligations involve the issuer making a limited commitment. Some issuers extend additional commitments or voluntary commitments to support debt service in the event the third party is, or will be, unable to do so.

An issuer should not recognize a conduit debt obligation as a liability. However, an issuer should recognize a liability associated with an additional commitment or a voluntary commitment to support debt service if certain recognition criteria are met. As long as a conduit debt obligation is outstanding, an issuer that has made an additional commitment should evaluate at least annually whether those criteria are met. An issuer that has made only a limited commitment should evaluate whether those criteria are met when an event occurs that causes the issuer to reevaluate its willingness or ability to support the obligor's debt service through a voluntary commitment.

GASB 91 – *Conduit Debt Obligations (Continued)*

This Statement also addresses arrangements—often characterized as leases—that are associated with conduit debt obligations. In those arrangements, capital assets are constructed or acquired with the proceeds of a conduit debt obligation and used by third-party obligors in the course of their activities. Payments from third-party obligors are intended to cover and coincide with debt service payments. During those arrangements, issuers retain the titles to the capital assets. Those titles may or may not pass to the obligors at the end of the arrangements.

Issuers should not report those arrangements as leases, nor should they recognize a liability for the related conduit debt obligations or a receivable for the payments related to those arrangements. In addition, the following provisions apply:

- If the title passes to the third-party obligor at the end of the arrangement, an issuer should not recognize a capital asset.

- If the title does not pass to the third-party obligor and the third party has exclusive use of the entire capital asset during the arrangement, the issuer should not recognize a capital asset until the arrangement ends.

- If the title does not pass to the third-party obligor and the third party has exclusive use of only portions of the capital asset during the arrangement, the issuer, at the inception of the arrangement, should recognize the entire capital asset and a deferred inflow of resources. The deferred inflow of resources should be reduced, and an inflow recognized, in a systematic and rational manner over the term of the arrangement.

This Statement requires issuers to disclose general information about their conduit debt obligations, organized by type of commitment, including the aggregate outstanding principal amount of the issuers' conduit debt obligations and a description of each type of commitment. Issuers that recognize liabilities related to supporting the debt service of conduit debt obligations also should disclose information about the amount recognized and how the liabilities changed during the reporting period.

How the Changes in this Statement will Improve Financial Reporting

The requirements of this Statement will improve financial reporting by eliminating the existing option for issuers to report conduit debt obligations as their own liabilities, thereby ending significant diversity in practice. The clarified definition will resolve stakeholders' uncertainty as to whether a given financing is, in fact, a conduit debt obligation. Requiring issuers to recognize liabilities associated with additional commitments extended by issuers and to recognize assets and deferred inflows of resources related to certain arrangements associated with conduit debt obligations also will eliminate diversity, thereby improving comparability in reporting by issuers. Revised disclosure requirements will provide financial statement users with better information regarding the commitments issuers extend and the likelihood that they will fulfill those commitments. That information will inform users of the potential impact of such commitments on the financial resources of issuers and help users assess issuers' roles in conduit debt obligations.

GASB 94 – *Public-Private and Public-Public Partnerships and Availability Payment Arrangements*

The primary objective of this Statement is to improve financial reporting by addressing issues related to public-private and public-public partnership arrangements (PPPs). As used in this Statement, a PPP is an arrangement in which a government (the transferor) contracts with an operator (a governmental or nongovernmental entity) to provide public services by conveying control of the right to operate or use a nonfinancial asset, such as infrastructure or other capital asset (the underlying PPP asset), for a period of time in an exchange or exchange-like transaction. Some PPPs meet the definition of a service concession arrangement (SCA), which the Board defines in this Statement as a PPP in which (1) the operator collects and is compensated by fees from third parties; (2) the transferor determines or has the ability to modify or approve which services the operator is required to provide, to whom the operator is required to provide the services, and the prices or rates that can be charged for the services; and (3) the transferor is entitled to significant residual interest in the service utility of the underlying PPP asset at the end of the arrangement.

This Statement also provides guidance for accounting and financial reporting for availability payment arrangements (APAs). As defined in this Statement, an APA is an arrangement in which a government compensates an operator for services that may include designing, constructing, financing, maintaining, or operating an underlying nonfinancial asset for a period of time in an exchange or exchange-like transaction.

***PPPs* -** This Statement requires that PPPs that meet the definition of a lease apply the guidance in Statement No. 87, Leases, as amended, if existing assets of the transferor that are not required to be improved by the operator as part of the PPP arrangement are the only underlying PPP assets and the PPP does not meet the definition of an SCA. This Statement provides accounting and financial reporting requirements for all other PPPs: those that either (1) meet the definition of an SCA or (2) are not within the scope of Statement 87, as amended (as clarified by this Statement). The PPP term is defined as the period during which an operator has a noncancelable right to use an underlying PPP asset, plus, if applicable, certain periods if it is reasonably certain, based on all relevant factors, that the transferor or the operator either will exercise an option to extend the PPP or will not exercise an option to terminate the PPP.

A transferor generally should recognize an underlying PPP asset as an asset in financial statements prepared using the economic resources measurement focus. However, in the case of an underlying PPP asset that is not owned by the transferor or is not the underlying asset of an SCA, a transferor should recognize a receivable measured based on the operator's estimated carrying value of the underlying PPP asset as of the expected date of the transfer in ownership. In addition, a transferor should recognize a receivable for installment payments, if any, to be received from the operator in relation to the PPP. Measurement of a receivable for installment payments should be at the present value of the payments expected to be received during the PPP term. A transferor also should recognize a deferred inflow of resources for the consideration received or to be received by the transferor as part of the PPP. Revenue should be recognized by a transferor in a systematic and rational manner over the PPP term.
This Statement requires a transferor to recognize a receivable for installment payments and a deferred inflow of resources to account for a PPP in financial statements prepared using the current financial resources measurement focus. Governmental fund revenue would be recognized in a systematic and rational manner over the PPP term.

GASB 94 – *Public-Private and Public-Public Partnerships and Availability Payment Arrangements (Continued)*

This Statement also provides specific guidance in financial statements prepared using the economic resources measurement focus for a government that is an operator in a PPP that either (1) meets the definition of an SCA or (2) is not within the scope of Statement 87, as amended (as clarified in this Statement). An operator should report an intangible right-to-use asset related to an underlying PPP asset that either is owned by the transferor or is the underlying asset of an SCA. Measurement of the right-to-use asset should be the amount of consideration to be provided to the transferor, plus any payments made to the transferor at or before the commencement of the PPP term, and certain direct costs. For an underlying PPP asset that is not owned by the transferor and is not the underlying asset of an SCA, an operator should recognize a liability measured based on the estimated carrying value of the underlying PPP asset as of the expected date of the transfer in ownership. In addition, an operator should recognize a liability for installment payments, if any, to be made to the transferor in relation to the PPP. Measurement of a liability for installment payments should be at the present value of the payments expected to be made during the PPP term. An operator also should recognize a deferred outflow of resources for the consideration provided or to be provided to the transferor as part of the PPP. Expense should be recognized by an operator in a systematic and rational manner over the PPP term.

This Statement also requires a government to account for PPP and non-PPP components of a PPP as separate contracts. If a PPP involves multiple underlying assets, a transferor and an operator in certain cases should account for each underlying PPP asset as a separate PPP. To allocate the contract price to different components, a transferor and an operator should use contract prices for individual components as long as they do not appear to be unreasonable based on professional judgment or use professional judgment to determine their best estimate if there are no stated prices or if stated prices appear to be unreasonable. If determining the best estimate is not practicable, multiple components in a PPP should be accounted for as a single PPP.

This Statement also requires an amendment to a PPP to be considered a PPP modification, unless the operator's right to use the underlying PPP asset decreases, in which case it should be considered a partial or full PPP termination. A PPP termination should be accounted for by a transferor by reducing, as applicable, any receivable for installment payments or any receivable related to the transfer of ownership of the underlying PPP asset and by reducing the related deferred inflow of resources. An operator should account for a termination by reducing the carrying value of the right-to-use asset and, as applicable, any liability for installment payments or liability to transfer ownership of the underlying PPP asset. A PPP modification that does not qualify as a separate PPP should be accounted for by remeasuring PPP assets and liabilities.

***APAs* -** An APA that is related to designing, constructing, and financing a nonfinancial asset in which ownership of the asset transfers by the end of the contract should be accounted for by a government as a financed purchase of the underlying nonfinancial asset. This Statement requires a government that engaged in an APA that contains multiple components to recognize each component as a separate arrangement. An APA that is related to operating or maintaining a nonfinancial asset should be reported by a government as an outflow of resources in the period to which payments relate.

GASB 96 – *Subscription-Based Information Technology Arrangements*

This Statement provides guidance on the accounting and financial reporting for subscription-based information technology arrangements (SBITAs) for government end users (governments). This Statement (1) defines a SBITA; (2) establishes that a SBITA results in a right-to-use subscription asset—an intangible asset—and a corresponding subscription liability; (3) provides the capitalization criteria for outlays other than subscription payments, including implementation costs of a SBITA; and (4) requires note disclosures regarding a SBITA. To the extent relevant, the standards for SBITAs are based on the standards established in Statement No. 87, Leases, as amended.

A SBITA is defined as a contract that conveys control of the right to use another party's (a SBITA vendor's) information technology (IT) software, alone or in combination with tangible capital assets (the underlying IT assets), as specified in the contract for a period of time in an exchange or exchange-like transaction.

The subscription term includes the period during which a government has a noncancelable right to use the underlying IT assets. The subscription term also includes periods covered by an option to extend (if it is reasonably certain that the government or SBITA vendor will exercise that option) or to terminate (if it is reasonably certain that the government or SBITA vendor will not exercise that option).

Under this Statement, a government generally should recognize a right-to-use subscription asset—an intangible asset—and a corresponding subscription liability. A government should recognize the subscription liability at the commencement of the subscription term, —which is when the subscription asset is placed into service. The subscription liability should be initially measured at the present value of subscription payments expected to be made during the subscription term. Future subscription payments should be discounted using the interest rate the SBITA vendor charges the government, which may be implicit, or the government's incremental borrowing rate if the interest rate is not readily determinable. A government should recognize amortization of the discount on the subscription liability as an outflow of resources (for example, interest expense) in subsequent financial reporting periods.

The subscription asset should be initially measured as the sum of (1) the initial subscription liability amount, (2) payments made to the SBITA vendor before commencement of the subscription term, and (3) capitalizable implementation costs, less any incentives received from the SBITA vendor at or before the commencement of the subscription term. A government should recognize amortization of the subscription asset as an outflow of resources over the subscription term.

Activities associated with a SBITA, other than making subscription payments, should be grouped into the following three stages, and their costs should be accounted for accordingly:

- Preliminary Project Stage, including activities such as evaluating alternatives, determining needed technology, and selecting a SBITA vendor. Outlays in this stage should be expensed as incurred.
- Initial Implementation Stage, including all ancillary charges necessary to place the subscription asset into service. Outlays in this stage generally should be capitalized as an addition to the subscription asset.

GASB 96 – *Subscription-Based Information Technology Arrangements (Continued)*

- Operation and Additional Implementation Stage, including activities such as subsequent implementation activities, maintenance, and other activities for a government's ongoing operations related to a SBITA. Outlays in this stage should be expensed as incurred unless they meet specific capitalization criteria.

In classifying certain outlays into the appropriate stage, the nature of the activity should be the determining factor. Training costs should be expensed as incurred, regardless of the stage in which they are incurred.

If a SBITA contract contains multiple components, a government should account for each component as a separate SBITA or nonsubscription component and allocate the contract price to the different components. If it is not practicable to determine a best estimate for price allocation for some or all components in the contract, a government should account for those components as a single SBITA.

This Statement provides an exception for short-term SBITAs. Short-term SBITAs have a maximum possible term under the SBITA contract of 12 months (or less), including any options to extend, regardless of their probability of being exercised. Subscription payments for short-term SBITAs should be recognized as outflows of resources.

This Statement requires a government to disclose descriptive information about its SBITAs other than short-term SBITAs, such as the amount of the subscription asset, accumulated amortization, other payments not included in the measurement of a subscription liability, principal and interest requirements for the subscription liability, and other essential information.

How the Changes in this Statement will Improve Financial Reporting

The requirements of this Statement will improve financial reporting by establishing a definition for SBITAs and providing uniform guidance for accounting and financial reporting for transactions that meet that definition. That definition and uniform guidance will result in greater consistency in practice. Establishing the capitalization criteria for implementation costs also will reduce diversity and improve comparability in financial reporting by governments. This Statement also will enhance the relevance and reliability of a government's financial statements by requiring a government to report a subscription asset and subscription liability for a SBITA and to disclose essential information about the arrangement. The disclosures will allow users to understand the scale and important aspects of a government's SBITA activities and evaluate a government's obligations and assets resulting from SBITAs.

This Page Left Intentionally Blank

REQUIRED COMMUNICATIONS

Board of Directors
Santa Clara Valley Water District
San Jose, California

We have audited the basic financial statements of the Santa Clara Valley Water District (District), San Jose, California, for the year ended June 30, 2020. Professional standards require that we communicate to you the following information related to our audit under generally accepted auditing standards and *Government Auditing Standards.*

Significant Audit Findings

Accounting Policies

Management is responsible for the selection and use of appropriate accounting policies. The significant accounting policies used by the District are described in Note 1(s) to the financial statements. No new accounting policies were adopted and the application of existing policies was not changed during the year, except as follows:

> ***Water Inventory*** – As discussed in Note 15 to the financial statements, during fiscal year 2020, the District determined that water inventory should be tracked. In the past, the amount paid for water was expensed and an inventory balance was not recorded. As a result of this change in accounting policy, the beginning fund balance of the Water Enterprise Fund was restated and increased $133.2 million.
>
> GASB 95 – *Postponement of the Effective Dates of Certain Authoritative Guidance*
>
> The primary objective of this Statement is to provide temporary relief to governments and other stakeholders in light of the COVID-19 pandemic. That objective is accomplished by postponing the effective dates of certain provisions in Statements and Implementation Guides that first became effective or are scheduled to become effective for periods beginning after June 15, 2018, and later.

Accountancy Corporation
3478 Buskirk Avenue, Suite 215
Pleasant Hill, CA 94523

T 925.930.0902
F 925.930.0135
E maze@mazeassociates.com
W **mazeassociates.com**

GASB 95 – *Postponement of the Effective Dates of Certain Authoritative Guidance (Continued)*

The effective dates of certain provisions contained in the following pronouncements are postponed by one year:

- Statement No. 83, Certain Asset Retirement Obligations
- Statement No. 84, Fiduciary Activities
- Statement No. 88, Certain Disclosures Related to Debt, including Direct Borrowings and Direct Placements
- Statement No. 89, Accounting for Interest Cost Incurred before the End of a Construction Period
- Statement No. 90, Majority Equity Interests
- Statement No. 91, Conduit Debt Obligations
- Statement No. 92, Omnibus 2020
- Statement No. 93, Replacement of Interbank Offered Rates
- Implementation Guide No. 2017-3, Accounting and Financial Reporting for Postemployment Benefits Other Than Pensions (and Certain Issues Related to OPEB Plan Reporting)
- Implementation Guide No. 2018-1, Implementation Guidance Update—2018
- Implementation Guide No. 2019-1, Implementation Guidance Update—2019
- Implementation Guide No. 2019-2, Fiduciary Activities.

The effective dates of the following pronouncements are postponed by 18 months:

- Statement No. 87, Leases
- Implementation Guide No. 2019-3, Leases.

Earlier application of the provisions addressed in this Statement is encouraged and is permitted to the extent specified in each pronouncement as originally issued.

The District implemented the provisions of Statement No. 88 in fiscal year 2019.

This pronouncement became effective, but did not have a material effect on the financial statements.

Unusual Transactions, Controversial or Emerging Areas

We noted no transactions entered into by the District during the year for which there is a lack of authoritative guidance or consensus. All significant transactions have been recognized in the financial statements in the proper period. However, events that occurred during fiscal year June 30, 2020 discussed below could have an impact on the financial statements:

On March 11, 2020, the World Health Organization declared the novel strain of coronavirus (COVID-19) a global pandemic and recommended containment and mitigation measures worldwide. The COVID-19 outbreak in the United States has caused business disruption through mandated and voluntary closings of businesses and shelter in place orders for all but those deemed essential services. While the business disruption is currently expected to be temporary, there is considerable uncertainty around the duration of the closings and shelter in place orders. Although many of the District's services are considered essential, District office was closed to the public, certain other services transitioned to online-only and because the District's major revenue sources, including property taxes and operating revenues, could be directly impacted by these events, it is probable that this matter will negatively impact the District. However, the ultimate financial impact and duration cannot be reasonably estimated at this time.

Accounting Estimates

Accounting estimates are an integral part of the financial statements prepared by management and are based on management's knowledge and experience about past and current events and assumptions about future events. Certain accounting estimates are particularly sensitive because of their significance to the financial statements and because of the possibility that future events affecting them may differ significantly from those expected. The most sensitive estimates affecting the District's financial statements were:

> *Estimated Fair Value of Investments:* As of June 30, 2020, the District held cash and investments as measured by fair value as disclosed in Note 3 to the financial statements. Fair value is essentially market pricing in effect as of June 30, 2020. These fair values are not required to be adjusted for changes in general market conditions occurring subsequent to June 30, 2020.
>
> *Estimate of Depreciation:* Management's estimate of the depreciation is based on useful lives determined by management. These lives have been determined by management based on the expected useful life of assets as disclosed in Note 1(e) to the financial statements. We evaluated the key factors and assumptions used to develop the depreciation estimate and determined that it is reasonable in relation to the basic financial statements taken as a whole.
>
> *Estimated Net Pension Liabilities and Pension-Related Deferred Outflows and Inflows of Resources:* Management's estimate of the net pension assets and liabilities and deferred outflows/inflows of resources are disclosed in Note 11 to the financial statements and are based on actuarial studies determined by a consultant, which are based on the experience of the District. We evaluated the key factors and assumptions used to develop the estimate and determined that it is reasonable in relation to the basic financial statements taken as a whole.
>
> *Estimated Net Other Post-Employment Benefit Plan (OPEB) Liability and OPEB-Related Deferred Outflows and Inflows of Resources:* Management's estimate of the net OPEB liability and deferred outflows/inflows of resources are disclosed in Note 12 to the financial statements and are *based* on actuarial studies determined by a consultant, which is based on the experience of the District. We evaluated the key factors and assumptions used to develop the estimate and determined that it is reasonable in relation to the basic financial statements taken as a whole.

Disclosures

The financial statement disclosures are neutral, consistent, and clear.

Difficulties Encountered in Performing the Audit

We encountered no significant difficulties in dealing with management in performing and completing our audit.

Corrected and Uncorrected Misstatements

Professional standards require us to accumulate all known and likely misstatements identified during the audit, other than those that are clearly trivial, and communicate them to the appropriate level of management. We did not propose any audit adjustments that, in our judgement, could have a significant effect, either individually or in the aggregate, on the District's financial reporting process.

Disagreements with Management

For purposes of this letter, a disagreement with management is a financial accounting, reporting, or auditing matter, whether or not resolved to our satisfaction, that could be significant to the financial statements or the auditor's report. We are pleased to report that no such disagreements arose during the course of our audit.

Management Representations

We have requested certain representations from management that are included in a management representation letter dated January 13, 2021.

Management Consultations with Other Independent Accountants

In some cases, management may decide to consult with other accountants about auditing and accounting matters, similar to obtaining a "second opinion" on certain situations. If a consultation involves application of an accounting principle to the District's financial statements or a determination of the type of auditor's opinion that may be expressed on those statements, our professional standards require the consulting accountant to check with us to determine that the consultant has all the relevant facts. To our knowledge, there were no such consultations with other accountants.

Other Audit Findings or Issues

We generally discuss a variety of matters, including the application of accounting principles and auditing standards, with management each year prior to retention as the District's auditors. However, these discussions occurred in the normal course of our professional relationship and our responses were not a condition to our retention.

Other Information Accompanying the Financial Statements

We applied certain limited procedures to the required supplementary information that accompanies and supplements the basic financial statements. Our procedures consisted of inquiries of management regarding the methods of preparing the information and comparing the information for consistency with management's responses to our inquiries, the basic financial statements, and other knowledge we obtained during our audit of the basic financial statements. We did not audit the required supplementary information and do not express an opinion or provide any assurance on the required supplementary information.

We were engaged to report on the supplementary information, which accompany the financial statements but are not required supplementary information. With respect to this supplemental information, we made certain inquiries of management and evaluated the form, content, and methods of preparing the information to determine that the information complies with accounting principles generally accepted in the United States of America, the method of preparing it has not changed from the prior period, and the information is appropriate and complete in relation to our audit of the financial statements. We compared and reconciled the supplemental information to the underlying accounting records used to prepare the financial statements or to the financial statements themselves.

We were not engaged to report on the Introductory and Statistical Sections which accompany the financial statements, but are not required supplementary information. Such information has not been subjected to the auditing procedures applied in the audit of the basic financial statements, and accordingly, we do not express an opinion or provide any assurance on them.

******

This information is intended solely for the use of the Board of Directors and management and is not intended to be, and should not be, used by anyone other than these specified parties.

Maze + Associates

Pleasant Hill, California
January 13, 2021

MAZE & ASSOCIATES

INDEPENDENT ACCOUNTANT'S REPORT

To the Board of Directors
Santa Clara Valley Water District
San Jose, California

We have examined management's assertion that the Santa Clara Valley Water District (the District) complied with the provisions of the California Government Code, the District's Investment Policy, and Staff Investment Guidelines during the year ended June 30, 2020. Management is responsible for its assertion. Our responsibility is to express an opinion on management's assertion about the District's compliance based on our examination.

Our examination was conducted in accordance with attestation standards established by the American Institute of Certified Public Accountants. Those standards require that we plan and perform the examination to obtain reasonable assurance about whether management's assertion about compliance with the specified requirements is fairly stated, in all material respects. An examination involves performing procedures to obtain evidence about whether management's assertion is fairly stated, in all material respects. The nature, timing, and extent of the procedures selected depend on our judgment, including an assessment of the risks of material misstatement of management's assertion, whether due to fraud or error. We believe that the evidence we obtained is sufficient and appropriate to provide a reasonable basis for our opinion

Our examination does not provide a legal determination on the District's compliance with the specified requirements.

In our opinion, management's assertion that the District complied with the aforementioned requirements for the year ended June 30, 2020, is fairly stated, in all material respects.

This report is intended solely for the information of the District's Treasury Oversight Committee, the Board of Directors, management, and applicable legislative bodies. However, this report is a matter of public record and its distribution is not limited.

Maze + Associates

Pleasant Hill, California
January 13, 2021

Accountancy Corporation
3478 Buskirk Avenue, Suite 215
Pleasant Hill, CA 94523

T 925.930.0902
F 925.930.0135
E maze@mazeassociates.com
W **mazeassociates.com**

THIS PAGE INTENTIONALLY LEFT BLANK

MAZE & ASSOCIATES

INDEPENDENT ACCOUNTANT'S REPORT ON APPLYING AGREED UPON PROCEDURES FOR COMPLIANCE WITH THE PROPOSITION 111 2019-2020 APPROPRIATIONS LIMIT INCREMENT

To the Board of Directors
Santa Clara Valley Water District
San Jose, California

We have performed the procedures below, which were agreed to by the Santa Clara Valley Water District, on the Appropriations Limit Worksheet (Worksheet) for the year ended June 30, 2020. The District's management is responsible for the Worksheet. These procedures, which were suggested by the League of California Cities and presented in their Article XIIIB Appropriations Limitation Uniform Guidelines, were performed solely to assist you in meeting the requirements of Section 1.5 of Article XIIIB of the California Constitution. The sufficiency of these procedures is solely the responsibility of the District. Consequently, we make no representation regarding the sufficiency of the procedures described below either for the purpose for which this report has been requested or for any other purpose.

The procedures and associated findings were as follows:

A. We obtained the Worksheet and determined that the 2019-2020 Appropriations Limit of $160,192,290 and annual adjustment factors were adopted by Resolution of the Board of Directors. We also determined that the population and inflation options were selected by a recorded vote of the Board of Directors.

B. We recomputed the 2019-2020 Appropriations Limit by multiplying the 2018-2019 Prior Year Appropriations Limit by the Total Growth Factor. We recomputed the Total Growth Factor by multiplying the population option by the inflation option.

C. For the Worksheet, we agreed the Per Capita Income Factor, City Population Factor and County Population Factor to California State Department of Finance Worksheets.

This agreed-upon procedures engagement was conducted in accordance with attestation standards established by the American Institute of Certified Public Accountants. We were not engaged to and did not conduct an examination or review, the objective of which would be the expression of an opinion or conclusion, respectively, on the Worksheet. Accordingly, we do not express such an opinion or conclusion. Had we performed additional procedures, other matters might have come to our attention that would have been reported to you.

This report is intended solely for the information and use of management and the Board of Directors and is not intended to be and should not be used by anyone other than those specified parties; however, this restriction is not intended to limit the distribution of this report, which is a matter of public record.

Maze + Associates

Pleasant Hill, California
July 2, 2020

Accountancy Corporation
3478 Buskirk Avenue, Suite 215
Pleasant Hill, CA 94523

T 925.930.0902
F 925.930.0135
E maze@mazeassociates.com
W **mazeassociates.com**

THIS PAGE INTENTIONALLY LEFT BLANK

MAZE & ASSOCIATES

INDEPENDENT ACCOUNTANT'S REPORT

To the Board of Directors
Santa Clara Valley Water District
San Jose, California

We have performed the procedures enumerated below, which were agreed to by the Santa Clara Valley Water District (the District), solely to assist you with respect to administration of travel and subsistence expenses of the District for the fiscal year ended June 30, 2020. The District's management is responsible for the effective administration of the District's Travel and Subsistence Policies and Procedures. This agreed-upon procedures engagement was conducted in accordance with attestation standards established by the American Institute of Certified Public Accountants. The sufficiency of these procedures is solely the responsibility of those parties specified in the report. Consequently, we make no representation regarding the sufficiency of the procedures described below either for the purpose for which this report has been requested or for any other purpose.

Our procedures and findings are as follows:

Travel and Subsistence Expenses:

We reviewed the District's Ad-3.4 Travel and Subsistence and Governance Policies of the Board. We selected a sample of twenty-five transactions of Board Member expenses and twenty-five transactions of employee expenses to verify compliance with the District's Travel and Subsistence Policies and Procedures.

A. Board Member Expenses

We selected fifteen significant transactions of travel reimbursements related to conferences, meetings, and miscellaneous expenses to verify compliance with the District's policy. Additionally, we randomly selected ten additional samples of various amounts to obtain a representative sample of those reimbursements.

B. District Employee Expenses

We selected ten significant transactions of travel reimbursements to verify compliance with the District's policy. Additionally, we randomly selected fifteen additional samples of various amounts to obtain a representative sample of those reimbursements.

We traced each reimbursement to supporting documentation and compared the reimbursement to the Governance Policies of the Board and the Travel Expense Reimbursement Policy for compliance. Our review of the compliance of those expenses referred to above reveal no exceptions to the policies of the District.

Accountancy Corporation
3478 Buskirk Avenue, Suite 215
Pleasant Hill, CA 94523

T 925.930.0902
F 925.930.0135
E maze@mazeassociates.com
W **mazeassociates.com**

We were not engaged to, and did not; conduct an audit of the Travel and Subsistence Procedures, the object of which would be the expression of an opinion on the District's Travel and Subsistence Policies and Procedures. Accordingly, we do not express such an opinion. Had we performed additional procedures, other matters might have come to our attention that would have been reported to you.

This report is intended solely for the information and use of the Board of Directors and management of District and is not intended to be, and not should be, used by anyone other than those specified parties.

Maze + Associates

Pleasant Hill, California

January 3, 2021

Santa Clara Valley Water District

File No.: 21-0065

Agenda Date: 1/26/2021
Item No.: 9.2.

BOARD AGENDA MEMORANDUM

SUBJECT:
CEO and Chiefs' Report.

ATTACHMENTS:
Handout 9.2-A: Stream Maintenance Report
*Handout 9.2-B: Government Relations Legislative Update
*Handout 9.2-A1: Jeffrey Hare

THIS PAGE INTENTIONALLY LEFT BLANK

Stream Maintenance Report

June 15, 2020 through December 3, 2020

2020 Season Ends - Summary Report

Valley Water recently concluded a successful 2020 work season under its Stream Maintenance Program (SMP) for sediment removal, bank protection, and vegetation management. In total, Valley Water completed 388 vegetation management projects, 10 bank repairs and 12 sediment removal projects; vegetation management and minor maintenance work continues on various creeks throughout the county. Valley Water staff worked closely with regulatory agency personnel to secure needed approvals and received extensions to work on several projects past the October 15th work season deadline for sediment removal and bank stabilization projects.

Valley Water's Vegetation Field Operations Unit is currently focusing on SMP mitigation activities including 32 Invasive Plant Management Program (IPMP) projects and 25 revegetation projects. Field crews continue to work countywide on removing channel obstructions from fallen trees, trash and debris.

Continued SMP work will focus on preparation of an annual summary report, which will be submitted to regulatory agencies in late January 2021. Upcoming SMP work will also include identification of potential stream maintenance projects for summer 2021. Valley Water staff will continue its efforts on program permit renewal to finalize new permits from the Army Corps of Engineers and the San Francisco Bay Conservation & Development Commission.

Summary of sediment removal, bank protection, minor maintenance, and instream habitat improvement projects completed during 2020 SMP season

WORK TYPE	LOCATION	MUNICIPALITY	DISTRICT/ DIRECTOR	STATUS	ACCOMPLISHMENTS (ESTIMATED)
Sediment removal	Ross Creek upstream of Ross Avenue	San Jose	4 (LeZotte)	Completed 6/29/20	55 cubic yards
Bank protection	West Branch Llagas Creek upstream of Leavesley Road	Gilroy	1 (Varela)	Completed 7/1/20	700 linear feet
Sediment removal	Regnart Creek upstream of Blaney Avenue	Cupertino	5 (Hsueh)	Completed 7/2/20	448 cubic yards
Sediment removal	San Tomas Aquino Creek upstream of Westmont Avenue	San Jose	5 (Hsueh)	Completed 7/2/20	3,730 cubic yards
Bank protection	Llagas Creek downstream of Bloomfield Avenue	Gilroy	1 (Varela)	Completed 7/8/20	30 linear feet
Bank protection	Canoas Creek upstream of Snell Avenue	San Jose	4 (LeZotte)	Completed 7/13/20	125 linear feet
Bank protection	Golf Creek upstream of Camden Avenue	San Jose	4 (LeZotte)	Completed 7/21/20	110 linear feet
Bank protection	Alamitos Creek upstream of Greystone Creek confluence	San Jose	4 (LeZotte)	Completed 7/31/20	98 linear feet

Stream Maintenance Report

June 15, 2020 through December 3, 2020

WORK TYPE	LOCATION	MUNICIPALITY	DISTRICT/ DIRECTOR	STATUS	ACCOMPLISHMENTS (ESTIMATED)
Sediment removal, bank protection	Los Coches Creek downstream of Park Victoria Drive	Milpitas	3 (Santos)	Completed 8/11/20	560 cubic yards; 300 linear feet
Sediment removal, bank protection	Regnart Creek downstream of Kim Avenue	Cupertino	5 (Hsueh)	Completed 8/24/20	373 cubic yards; 170 linear feet
Bank protection	Golf Creek downstream of Camden Avenue	San Jose	4 (LeZotte)	Completed 8/25/20	260 linear feet
Sediment removal	Calera Creek upstream of Escuela Parkway	Milpitas	3 (Santos)	Completed 9/3/20	2,707 cubic yards
Bank (levee) protection – rodent control	Lions Creek downstream of Santa Teresa Boulevard	Gilroy	1 (Varela)	Completed 9/3/20	1,200 linear feet
Sediment removal	Thompson Creek downstream of Quimby Road	San Jose	1 (Varela)	Completed 9/23/20	3,746 cubic yards
Sediment removal	Saratoga Creek, from San Tomas Aquino confluence to Warburton Avenue	Santa Clara	2 (Keegan)	Completed 10/27/20	4,482 cubic yards
Sediment removal	Stevens Creek upstream of Crittenden Lane	Mountain View	7 (Kremen)	Completed 10/27/20	7,381 cubic yards
Sediment removal	Lower Silver Creek upstream of Tully Road	San Jose	1 (Varela)	Completed 10/28/20	24,248 cubic yards
Bank protection – rodent control	Lower Penitencia Creek downstream of Great Mall Parkway	Milpitas	3 (Santos)	Completed 11/6/20	700 linear feet
Sediment removal	Llagas Creek upstream of Leavesley Road	Gilroy	1 (Varela)	Completed 11/11/20	9,262 cubic yards
Sediment removal	Permanente Creek Upstream of Eastwood	Los Altos	7 (Kremen)	Completed 12/3/20	50 cubic yards

The information in this report has been provided by Valley Water staff for SMP work between June 15 and December 3, 2020. As final accomplishments are gathered, some of the data reported here may change.

Stream Maintenance Report

June 15, 2020 through December 3, 2020

Safe Clean Water Priority D1: Management of Revegetation Projects

Mitigation Site Maintenance

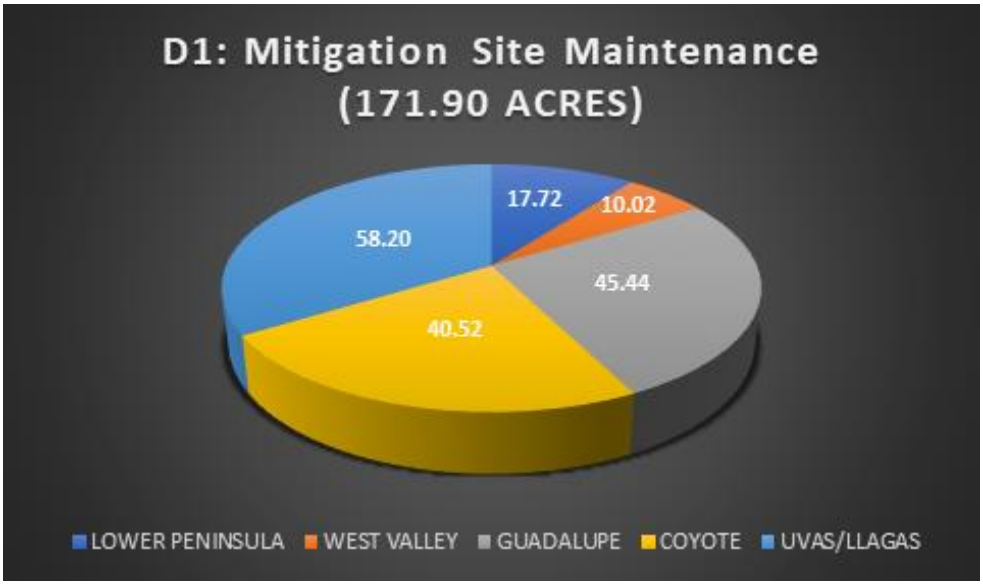

This Safe Clean Water (SCW) project supports Valley Water maintenance of at least 300 acres of existing revegetation projects throughout the five watersheds and provides for maintenance of future revegetation sites.

The chart at left shows the work completed within this season.

Safe Clean Water Priority E.1.1: Vegetation Control for Capacity

Aquatic Herbicide Application, Vegetation Removal < 6" dbh, Tree Removal 6–12" dbh, Limb Removal > 4" dbh

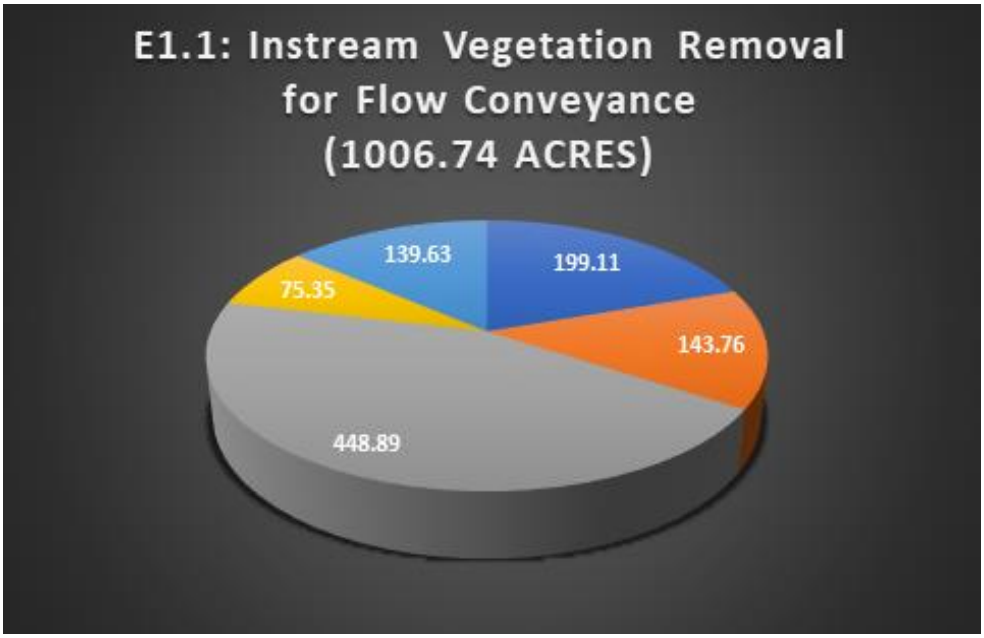

This SCW project supports Valley Water's ongoing instream vegetation removal activities for flow conveyance.

The chart at the left shows the work completed during this season.

Stream Maintenance Report

June 15, 2020 through December 3, 2020

Safe Clean Water Priority E.1.4: Vegetation Management for Access

Access Pruning, Weed Abatement, Upland Herbicide Application

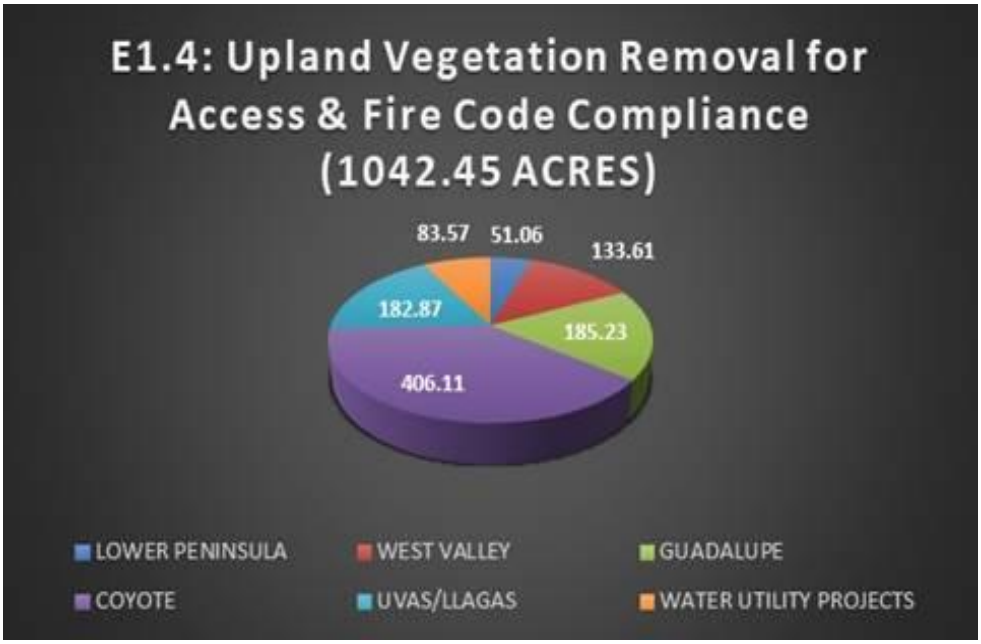

This SCW project supports Valley Water's ongoing upland vegetation control activities for fire code compliance and maintaining access for personnel and equipment.

The chart at left shows the work completed during this season.

For questions or further information, please contact Sue Tippets, Interim Chief Operating Officer for Watersheds, at (408) 630-2253.

JANUARY 26, 2021

Office of Government Relations Legislative Update

Valley Water

FEDERAL ADVOCACY EFFORTS

US Capitol

Congress Passes FY21 Funding and WRDA, Includes Valley Water Priorities

On December 27, the President signed a Fiscal Year 2021 omnibus funding bill that included the Water Resources Development Act (WRDA). The final WRDA includes the following Valley Water priorities:

1. Policy on Multi-Purpose Projects: Urges the Corps to develop project alternatives that have multiple benefits, including flood risk management, ecosystem restoration, and navigation. This could help a project like Upper Penitencia where the community supports a multi-purpose project, not just a flood risk management project.

2. Eligibility for High-Hazard Dam Rehabilitation Funding: Allows hydroelectric dams with a generating capacity of 1.5 megawatts or less to be eligible to receive assistance under the Federal Emergency Management Agency's Rehabilitation of High Hazard Potential Dams Program. This would allow Anderson Dam to become eligible for this pot of funding, which was created under the Water Infrastructure Improvements for the Nation Act and is authorized through 2026.

While the bill did not contain a Reclamation title, for which staff advocated and would have covered key programs like water storage and water recycling, staff will continue to push for these and other water infrastructure priorities in the new Congress.

STATE ADVOCACY EFFORTS

State Bill Authorizing Best Value Contracting for Anderson
Assemblymember Robert Rivas (D-Hollister) has introduced AB 271 regarding the Best Value Contracting authorization for the Anderson Dam project. With the veto of AB 3005 (Rivas) last year, the Valley Water Board decided to pursue the Best Value Contracting provisions in a standalone bill. Assemblymember Berman and Senators Nielson, and Laird have already agreed to co-author the bill.
Staff has met with the consultants in the Assembly Local Government Committee and Senate Governance and

State Capitol

Finance Committees to seek any feedback they may have. The consultants were already familiar with the issue, having drafted a portion of the committee analysis last year for AB 3005. As such, staff did not receive many questions from the consultants. AB 271 will likely be heard in its first policy committee in March or April. There is a potential situation where the legislative leadership may call for a reduction in bills due to the impacts of the pandemic on the legislature's ability to process the 3000 bills introduced via remote telecommuting. Staff is engaging in advocacy to express the urgent need for the bill to allow Valley Water to plan and prepare for the Anderson Dam contracts in 2022-2023.

LOCAL ADVOCACY AND ENGAGEMENT EFFORTS

Valley Water Preparing for Decennial Redistricting Effort

Redistricting is required by local, state and federal law following each federal census and calls for an adjustment to a jurisdiction's electoral district boundaries based on demographic shifts between each federal census. The objective is to meet the one-person, one-vote test and comply with provisions of the federal Voting Rights Act. Adjustments to electoral districts are accomplished through the completion of a redistricting study. To conduct the study, staff is in the process of retaining a consultant by no later than the end of January.

At the December 8, 2020 meeting, the Board:
1) established a seven member Redistricting Advisory Committee consisting of members of the public to review the census data; 2) adopted operating guidelines for the review process; and 3) approved a schedule for the Redistricting Advisory Committee to complete its work. The Committee will conduct a series of virtual public meetings to review census data engage the public in the process, particularly as it relates to input and feedback on draft maps with adjusted boundaries for Board review and action. Staff will return to the Board on January 26, 2021 to secure approval

continued on back »

of the Board's nominations for the Committee, approve additional recommended guidelines for the Committee, and approve the first Committee agenda.

In the meantime, staff is working on launching a robust to create a robust public outreach and engagement effort to ensure that each and every voice in the community has the opportunity to be heard in this critical process. Included as part of this effort is a web page dedicated to the redistricting effort, with links for the public to access current information on the process, meeting agendas and minutes for the Redistricting Advisory Committee, maps, and also access a map tool so they can draw their own maps in case they are interested in submitting additional ideas for the Redistricting Advisory Committee's consideration.

The first meeting of the Committee is now tentatively scheduled for March 17, 2021. Valley Water must adopt the adjusted boundaries and provide them to the Registrar of Voters by November 2, 2021 - (please note this date may be adjusted by the new Administration).

Upcoming Events:

Note: due to the Coronavirus (COVID-19) outbreak, staff is not physically participating in any events during the month of January. Staff is participating in virtual events as they are planned, including Joint Venture's State of the Valley on February 23-24, 2021 and will assess participation in events in February to follow the most current shelter in place order.

Federal Legislation Active in January 2021 with Board-Approved Positions:

Bill (Author)	Subject	Position	Status
H.R. 548 (Calvert)	Federally Integrated Species Health (FISH) Act	Support	Introduced and referred to the House Committee on Natural Resources
H.R. 357 (Garamendi)	Sacramento-San Joaquin Delta National Heritage Area Act	Support	Signed into law as part of the John D. Dingell, Jr. Conservation, Management, and Recreation Act (P.L. 116-9)
S. 40 (Barrasso)	Bureau of Reclamation Transparency Act	Support and Amend	Introduced and referred to the Senate Committee on Energy and Natural Resources
H.R. 1137 (Garamendi)	To amend the Water Resources Development Act of 1986 to repeal the authority relating to reprogramming during national emergencies	Support	Introduced and referred to the House Committee on Transportation and Infrastructure
S. 326 (Udall)	Restrictions Against Illegitimate Declarations for Emergency Re-appropriations (RAIDER) Act of 2019	Support	Introduced and referred to the House Committee on Appropriations
H.R. 1162 (Napolitano)	Water Recycling Improvement and Investment Act	Support	Hearing held in the House Committee on Natural Resources (June 13, 2019)
H.R. 1132 (Speier)	San Francisco Bay Restoration Act of 2019	Support	Passed the House by voice vote (September 19, 2019)
H.R. 1497 (DeFazio)	Water Quality Protection and Job Creation Act	Support	Markup held in the House Committee on Transportation and Infrastructure, ordered to be reported favorably (October 29, 2019)
H.R. 658 (DeLauro)	National Infrastructure Development Bank Act of 2019	Support	Introduced and referred to the House Committees on Energy and Commerce; Transportation and Infrastructure; Financial Services; and Ways and Means
H.R. 1417 (Lawrence) / S. 611 (Sanders)	Water Affordability, Transparency, Equity, and Reliability (WATER) Act of 2019	Support	H.R. 1417: Introduced and referred to the House Committees on Transportation and Infrastructure; Energy and Commerce; Ways and Means; and Agriculture; S. 611: Introduced and referred to the Senate Committee on Environment and Public Works
H.R. 1621 (McClintock)	Water Supply Permitting Coordination Act	Support	Introduced and referred to the House Committee on Natural Resources

Federal Legislation Active in January 2021 with Board-Approved Positions:

H.R. 2313 (Huffman)	Water Conservation Rebate Tax Parity Act	Support	Introduced and referred to the House Committee on Ways and Means
S. 923 (Feinstein)	Fighting Homelessness Through Services and Housing Act	Support	Introduced and referred to the Senate Committee on Health, Education, Labor and Pensions
H.R. 2473 (Harder)	Securing Access for the central Valley and Enhancing (SAVE) Water Resources Act	Support and Amend	Hearing held in the House Committee on Natural Resources (June 13, 2019)
H.R. 363 (Calvert)	Reducing Environmental Barriers to Unified Infrastructure and Land Development (REBUILD) Act of 2019	Support	Introduced and referred to the House Committee on Natural Resources
S. 403 (Whitehouse) / H.R. 1159 (Cicilline)	Innovative Materials for America's Growth and Infrastructure Newly Expanded (IMAGINE) Act of 2019	Support and Amend	S. 403: Introduced and referred to the Senate Committee on Environment and Public Works; H.R. 1159: Introduced and referred to the House Committees on Transportation and Infrastructure; Science, Space, and Technology; and Energy and Commerce
H.R. 4033 (Kildee) / S. 2466 (Harris)	Water Justice Act	Support and Amend	Introduced and referred to the House Committees on Energy and Commerce; Budget; Ways and Means; Natural Resources; Agriculture; and Transportation and Infrastructure
S. 1837 (Gillibrand) / H.R. 3254 (Delgado)	Protecting Infrastructure and Promoting the Economy (PIPE) Act	Support and Amend	S. 1837: Introduced and referred to the Senate Committee on Environment and Public Works; H.R. 3254: Introduced and referred to the House Committee on Transportation and Infrastructure and the Committee on Energy and Commerce
H.R. 3091 (Loebsack)	National Flood Research and Education Center Act	Support	Introduced and referred to the House Committee on Science, Space, and Technology and the Committee on Transportation and Infrastructure
S. 2236 (Booker) / H.R. 3923 (Ruiz)	Environmental Justice Act of 2019	Support	Introduced and referred to the Senate Committee on Environment and Public Works
H.R. 5752 (Costa)	Conveyance Capacity Correction Act	Support	Introduced and referred to the House Committee on Natural Resources
H.R. 5504 (Brownley)	To amend the National Dam Safety Program Act with respect to the definition of eligible high hazard potential dam, and for other purposes	Support	Introduced and referred to the House Committee on Transportation and Infrastructure
H.R. 5302 (McNerney)	Western Water Recycling and Drought Relief Act	Support and Amend	Introduced and referred to the House Committee on Natural Resources
H.R. 5316 (Cox)	Move Water Now Act	Support and Amend	Marked up in the House Committee on Natural Resources, ordered to be reported favorably (February 12, 2020)
H.R. XXXX (Pelosi)	Coronavirus Stimulus Phase 3 (became the Health and Economic Recovery Omnibus Emergency Solutions Act or the HEROES Act, H.R. 6800)	Support and Amend	Passed the House (May 15, 2020)
H.R. XXXX (Pelosi)	Coronavirus Stimulus Phases 3.5 (became the Paycheck Protection Program Flexibility Act, H.R. 7010) and 4	Support and Amend	H.R. 7010 was signed into law on June 5, 2020 (P.L. 116-142)
H.R. 2 (DeFazio)	Investing in a New Vision for the Environment and Surface Transportation in America Act (INVEST in America Act)	Support and Amend	Passed the House (July 1, 2020)

Federal Legislation Active in January 2021 with Board-Approved Positions:

H.R. XXXX (Huffman)	Furthering Underutilized Technologies and Unleashing Responsible Expenditures for Drought Resiliency (FUTURE Drought Resiliency) Act	Support and Amend	Not yet introduced (provisions included as part of H.R. 2)
S. 3591 (Barrasso)	America's Water Infrastructure Act of 2020	Support and Amend	Markup held in the Senate Committee on Environment and Public Works, ordered to be reported favorably (May 11, 2020)
S. 3590 (Barrasso)	Drinking Water Infrastructure Act of 2020	Support	Markup held in the Senate Committee on Environment and Public Works, ordered to be reported favorably (May 11, 2020)
H.R. 7073 (Garamendi)	Special Districts Provide Essential Services Act	Support	Introduced and referred to the House Committee on Oversight and Reform and the Committee on Financial Services
S. 3811 (Feinstein)	Restoration of Essential Conveyance Act	Support	Hearing held in the Senate Committee on Energy and Natural Resources (July 22, 2020)
S. 4188 (Harris)	Water for Tomorrow Act	Support and Amend	Hearing held in the Senate Committee on Energy and Natural Resources (July 22)
H.R. 7575 (DeFazio)	Water Resources Development Act	Support and Amend	Passed the House (July 29)
S. 4308 (Sinema)	A bill to amend the Social Security Act to include special districts in the coronavirus relief fund, to direct the Secretary to include special districts as an eligible issuer under the Municipal Liquidity Facility, and for other purposes.	Support	Introduced and referred to the Senate Committee on Finance
S. 2596 (Duckworth)	Voluntary Water Partnership for Distressed Communities Act of 2019	Support	Introduced and referred to the Senate Committee on Environment and Public Works
S. 4530 (Feinstein) / H.R. 8041 (Harder)	Snow Water Supply Forecasting Program Authorization Act	Support	S. 4530: Introduced and referred to the Senate Committee on Energy and Natural Resources; H.R. 8041: Introduced and referred to the House Committee on Natural Resources
H.R. 8166 (Cox)	Western Water Storage Infrastructure Act	Support and Amend	Introduced and referred to the House Committee on Natural Resources
H.R. XXXX (Pelosi)	Coronavirus Stimulus Bill (Phase 4)	Support and Amend	Not yet introduced (currently being negotiated)

© 2021 Santa Clara Valley Water District • 01/2021, SY

Michele King

Subject: FW: Coyote Creek Maintenance Report Item 9.2

From: Jeffrey Hare <jeff@jeffreyhare.com>
Sent: Monday, January 25, 2021 5:07 PM
To: Board of Directors <board@valleywater.org>; Barbara Keegan <BKeegan@valleywater.org>; CEO <ceo@valleywater.org>
Cc: Frank Blackett <frank.blackett@ferc.gov>
Subject: Coyote Creek Maintenance Report Item 9.2

To: CEO and the Board of Directors

On Tuesday, you will be presented with a Stream Maintenance Report for the period of June 15 through December 3, 2020. The Report provides the description and accomplishments of the Stream Maintenance Program for sediment removal, bank protection, and vegetation management. As noted in the Report, the District completed 388 vegetation management projects, 10 bank repairs and 12 sediment removal projects. The Report states that an annual summary will be provided to regulatory agencies in late January, 2021.

While the amount of work in each of the areas identified in the Report represents a lot of work, it is obvious and notable that NONE of the projects took place in Coyote Creek. None. I find this odd because effective October 1, Valley Water was directed to cease holding any water (above deadpool level) in Anderson Reservoir, and therefore must release all rainfall and runoff into Coyote Creek for the duration of the repairs to Anderson Dam -- a period that will take up to ten (10) years or more. This means that Anderson will no longer provide any attenuation of water flows from the massive Coyote watershed.

Yet, it would appear that despite this significant development, no work was done to improve the capacity in Coyote Creek. When I raised the question, I was informed by Staff that it was probably due to staffing issues on account of COVID, and was then informed that it was because the Water District doesn't control all of the access to Coyote Creek. Yet somehow, the District was able to find enough Staff to complete the work described in the Report, and if access was a problem, I would like to know whether access was requested but denied.

In view of the risks associated with flooding in the single, largest watershed in the District's jurisdiction, I find it odd that there was no report of stream maintenance projects in Coyote Creek for the period leading up to the mandatory full opening of the discharge pipe.

Jeffrey Hare

Jeffrey B. Hare APC
A Professional Corporation
501 Stockton Ave.
San Jose, CA 95126
Direct: 408-279-3555
Mobile: 408-391-8321
Jeff@JeffreyHare.com

THIS PAGE INTENTIONALLY LEFT BLANK